Operating instructions

ebm-papst Mulfingen GmbH & Co. KGaA & Co. KG
Bachmühle 2
D-74673 Mulfingen
Phone +49 (0) 7938 81-0
info1@de.ebmpapst.com
www.ebmpapst.com

CONTENTS

1. SAFETY REGULATIONS AND INFORMATION 1
1.1 Hazard levels for warnings 1
1.2 Staff qualifications 1
1.3 Basic safety rules 1
1.4 Voltage 2
1.5 Safety and protective features 2
1.6 Electromagnetic radiation 2
1.7 Mechanical movement 2
1.8 Emissions 2
1.9 Hot surface 2
1.10 Transport 2
1.11 Storage 3

2. INTENDED USE 3

3. TECHNICAL DATA 4
3.1 Product drawing 4
3.2 Nominal data 5
3.3 Data in accordance with the EU Ecodesign Regulation 5
3.4 Technical description 5
3.5 Mounting data 6
3.6 Transport and storage conditions 6
3.7 Electromagnetic compatibility 6

4. CONNECTION AND STARTUP 6
4.1 Mechanical connection 6
4.2 Electrical connection 7
4.3 Connection in terminal box 8
4.4 Connection diagram 10
4.5 Configuration options 11
4.6 Equivalent circuit diagrams 12
4.7 Checking connections 13
4.8 Switching on the device 13
4.9 Switching off the device 13

5. INTEGRATED PROTECTIVE FEATURES 13

6. MAINTENANCE, MALFUNCTIONS, POSSIBLE CAUSES AND REMEDIES 14
6.1 Warning/status codes 14
6.2 Vibration testing 15
6.3 Cleaning 15
6.4 Safety inspection 16
6.5 Disposal 16

Translation of the original operating instructions

1. SAFETY REGULATIONS AND INFORMATION

Read these operating instructions carefully before starting work on the device. Observe the following warnings to prevent malfunctions or danger to persons.
These operating instructions are to be regarded as part of the device. The device is only to be sold or passed on together with the operating instructions.
These operating instructions may be duplicated and distributed to inform about potential dangers and their prevention.

1.1 Hazard levels for warnings

These operating instructions use the following hazard levels to indicate potentially hazardous situations and important safety regulations:

DANGER
Indicates an imminently hazardous situation which will result in death or serious injury if the specified actions are not taken. Compliance with the instructions is imperative.

WARNING
Indicates a potentially hazardous situation which can result in death or serious injury if the specified actions are not taken. Exercise extreme caution while working.

CAUTION
Indicates a potentially hazardous situation which can result in minor or moderate injury or damage to property if the specified actions are not taken.

NOTE
A potentially harmful situation can occur and, if not avoided, can lead to property damage.

1.2 Staff qualifications

The device may only be transported, unpacked, installed, operated, maintained and otherwise used by suitably qualified, trained and authorized technical staff.
Only authorized specialists are permitted to install the device, to carry out a test run and to perform work on the electrical installation.

1.3 Basic safety rules

The safety hazards associated with the device must be assessed again following installation in the final product.
The locally applicable industrial safety regulations are always to be observed when working on the device.
Keep the workplace clean and tidy. Untidiness in the work area increases the risk of accidents.
Note the following when working on the device:

⇒ Do not perform any modifications, additions or conversions on the device without the approval of ebm-papst.

WARNING
To reduce the risk of fire, electric shock or injury to people, do not use any replacement or add-on parts that have not been approved by ebm-papst (e.g. parts manufactured with a 3D printer).

1.4 Voltage

⇒ Check the device's electrical equipment at regular intervals; see Chapter 6.4 Safety inspection.

⇒ Replace loose connections and defective cables immediately.

DANGER
Electrically charged device
Risk of electric shock

→ When working on an electrically charged device, stand on a rubber mat.

WARNING
Live terminals and connections even with device switched off
Electric shock

→ Wait five minutes after disconnecting the voltage at all poles before opening the device.

CAUTION
In the event of a fault, the rotor and the impeller will be energized
The rotor and the impeller have basic insulation.

→ Do not touch the rotor and impeller once installed.

CAUTION
If control voltage or a stored speed set value is applied, the motor will restart automatically, e.g. after a power failure.
Risk of injury

→ Keep out of the device's danger zone.

→ When working on the device, switch off the line voltage and ensure that it cannot be switched back on.

→ Wait until the device comes to a stop.

→ After working on the device, remove any tools or other objects from the device.

1.5 Safety and protective features

DANGER
Guard missing and guard not functioning
Without a guard, hands may become caught up in the device during operation for example, resulting in serious injury. Loose parts or items of clothing could be drawn in.

→ The device is a built-in component. As the owner, you are responsible for ensuring that the device is adequately safeguarded.# Operate the device only with a fixed protective device and guard grill.

→ Stop the device immediately if a protective device is found to be missing or ineffective.

1.6 Electromagnetic radiation

Interference from electromagnetic radiation is possible, e.g. in conjunction with open- and closed-loop control devices.
If impermissible radiation levels occur following installation, appropriate shielding measures have to be taken by the user.

NOTE
Electrical or electromagnetic interference after installing the device in customer equipment.

→ Verify that the entire setup is EMC-compliant.

1.7 Mechanical movement

DANGER
Rotating device
Risk of injury to body parts coming into contact with the rotor or the impeller.

→ Secure the device against accidental contact.

→ Before working on the system/machine, wait until all parts have come to a standstill.

DANGER
Ejected parts
Missing protective devices may cause balancing weights or broken fan blades to be ejected and cause injuries.

→ Take appropriate safety measures.

WARNING
Rotating device
Long hair and dangling items of clothing, jewelry and the like can become entangled and be pulled into the device. Injuries can result.

→ Do not wear any loose-fitting or dangling clothing or jewelry while working on rotating parts.

→ Protect long hair with a cap.

1.8 Emissions

WARNING
Depending on the installation and operating conditions, the sound pressure level may exceed 70 dB(A).
Risk of noise-induced hearing loss

→ Take appropriate technical safety measures.

→ Protect operating personnel with appropriate safety equipment such as hearing protection.

→ Also observe the requirements of local agencies.

1.9 Hot surface

CAUTION
High temperature on electronics housing
Risk of burns

→ Ensure sufficient protection against accidental contact.

1.10 Transport

WARNING
Transporting the fan
Injuries from tipping or slipping

→ The fan is always to be transported with care and in its original packaging.

→ If set down too hard or at an angle for example, the impact can lead to bearing damage or deformation of the frame or impeller.

→ It must be ensured that the fans cannot tip over during transportation and handling.

→ Secure the fan(s) with appropriate equipment such as a lashing strip so that nothing can slip or tip, especially when stacking multiple fans.

→ Also make allowance for possible wind forces.

Translation of the original operating instructions

ebm-papst Mulfingen GmbH & Co. KGaA & Co. KG · Bachmühle 2 · D-74673 Mulfingen · Phone +49 (0) 7938 81-0 · info1@de.ebmpapst.com · www.ebmpapst.com

1.11 Storage

⇒ Store the device, partially or fully assembled, in a dry place, protected against the weather and free from vibration, in the original packaging in a clean environment.

⇒ Protect the device against environmental effects and dirt until final installation.

⇒ We recommend storing the device for no longer than one year in order to guarantee trouble-free operation and the longest possible service life.

⇒ Even devices explicitly intended for outdoor use are to be stored as described prior to commissioning.

⇒ Maintain the storage temperature, see Chapter 3.6 Transport and storage conditions.

⇒ Make sure that all cable glands are fitted with dummy plugs.

2. INTENDED USE

The device is exclusively designed as a built-in device for conveying air according to its technical data.
Any other usage above and beyond this does not conform with the intended purpose and constitutes misuse of the device.
Customer equipment must be capable of withstanding the mechanical and thermal stresses that can arise from this product. This applies for the entire service life of the equipment in which this product is installed.

Intended use also includes

- The device is only to be used in power systems with grounded neutral (TN/TT power systems), in power systems with phase conductor grounding, or in IT power systems.
- The device is to be used in networks with network quality characteristics as per EN 50160.
- Using the device only in stationary systems.
- Performing all maintenance work.
- Conveying air at an ambient air pressure between 800 mbar and 1050 mbar.
- Using the device within the permitted ambient temperature range; see Chapter 3.6 Transport and storage conditions and Chapter 3.2 Nominal data.
- Operating the device with all protective devices.
- Following the operating instructions.

Improper use

In particular, operating the device in the following ways is prohibited and could be hazardous:

- Operating the device in an unbalanced state, e.g. due to dirt deposits or ice formation.
- Resonant operation, operation with severe vibration. This also includes vibration transmitted to the fan from the customer installation.
- Operation in medical equipment with a life-sustaining or life-support function.
- Conveying solids in the flow medium.
- Painting the device
- Connections (e.g. screws) coming loose during operation.
- Opening the terminal box during operation.
- Conveying air that contains abrasive particles.
- Conveying highly corrosive air, e.g. salt spray. Exception: devices designed for salt spray and correspondingly protected.
- Conveying air with high dust content, e.g. suctioning off sawdust.
- Operating the device close to flammable materials or components.
- Operating the device in an explosive atmosphere.
- Using the device as a safety component or to perform safety-related functions.
- Operation with completely or partially disassembled or manipulated protective devices.
- In addition, all applications not listed among the intended uses.

Translation of the original operating instructions

3. TECHNICAL DATA

3.1 Product drawing

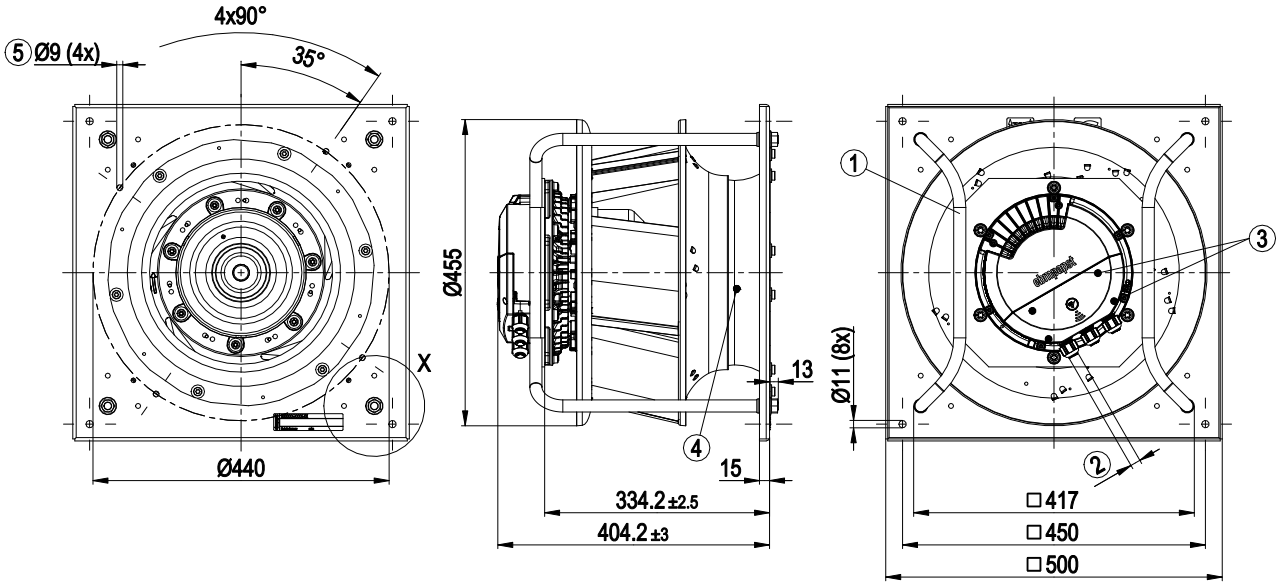

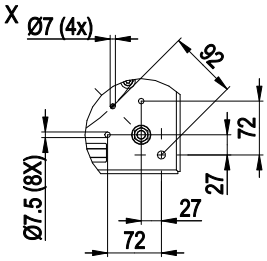

All dimensions in mm.

1	Installed position: shaft horizontal (install support struts only vertically as illustrated) or rotor on bottom; rotor on top on request
2	Cable diameter min. 4 mm, max. 10 mm, tightening torque 4 ± 0.6 Nm
	(The tightening torque is designed for PVC cables. If the cable materials are different, the tightening torque may have to be adjusted)
3	Tightening torque 1.5 ± 0.2 Nm
4	Inlet ring with pressure tap (k-factor: 188)
5	Attachment holes for FlowGrid 35505-2-2957 (not included in scope of delivery)

Translation of the original operating instructions

ebm-papst Mulfingen GmbH & Co. KGaA & Co. KG · Bachmühle 2 · D-74673 Mulfingen · Phone +49 (0) 7938 81-0 · info1@de.ebmpapst.com · www.ebmpapst.com

3.2 Nominal data

Motor	M3G150-FF

Phase	3~
Nominal voltage / VAC	400
Nominal voltage range / VAC	380 .. 480
Frequency / Hz	50/60

Method of obtaining data	ml
Speed (rpm) / min^{-1}	2800
Power consumption / W	3650
Current draw / A	5.5
Min. ambient temperature / °C	-40
Max. ambient temperature / °C	55

ml = Max. load · me = Max. efficiency · fa = Free air
cs = Customer specification · ce = Customer equipment

Subject to change

3.3 Data in accordance with the EU Ecodesign Regulation

Commission Regulation (EU) 327/2011 (prEN 17166)

	Actual	Req. 2015
01 Overall efficiency η_{es} / %	69.1	57.4
02 Measurement category	A	
03 Efficiency category	Static	
04 Efficiency grade N	73.7	62
05 Variable speed drive	Yes	
06 Year of manufacture	The year of manufacture is specified on the product's rating label.	
07 Manufacturer	ebm-papst Mulfingen GmbH & Co. KGaA & Co. KG (Germany)	
08 Type	K3G400-PA27-34	
09 Power consumption P_{ed} / kW	3.632	
09 Air flow q_v / m³/h	6976	
09 Pressure increase total p_{fs} / Pa	1242	
10 Speed (rpm) n / min^{-1}	2795	
11 Specific ratio*	1.01	
12 Recycling/disposal	Information on recycling and disposal is provided in the operating instructions.	
13 Maintenance	Information on installation, operation and maintenance is provided in the operating instructions.	
14 Additional components	Components used to calculate the energy efficiency that are not apparent from the measurement category are detailed in the CE declaration.	

* Specific ratio = 1 + p_{fs} / 100 000 Pa

Data obtained at optimum efficiency level. The efficiency values displayed for achieving conformity with the Ecodesign Regulation EU 327/2011 has been reached with defined air duct components (e.g. inlet rings). The dimensions must be requested from ebm-papst. If other air conduction geometries are used on the installation side, the ebm-papst evaluation loses its validity/the conformity must be confirmed again. The product does not fall within the scope of Regulation (EU) 2019/1781 due to the exception specified in Article 2 (2a) (motors completely integrated into a product).

3.4 Technical description

Weight	30 kg
Size	400 mm
Motor size	150
Rotor surface	Painted black
Electronics housing material	Die-cast aluminum, painted gray
Impeller material	Sheet aluminum, painted black
Support plate material	Sheet steel, galvanized and painted black
Support bracket material	Steel, painted black
Inlet nozzle material	Sheet steel, galvanized and painted black
Number of blades	5
Direction of rotation	Clockwise, viewed toward rotor
Degree of protection	IP55
Insulation class	"F"
Moisture (F) / Environmental (H) protection class	H2+S = Version for applications with increased corrosion protection
Ambient temperature note	Occasional start-up at temperatures between -40°C and -25°C is permitted. For continuous operation at ambient temperatures below -25°C (such as refrigeration applications), use must be made of a fan design with special low-temperature bearings.
Installation position	See legend on product drawing
Condensation drainage holes	On rotor side
Mode	S1
Motor bearing	Ball bearing
Technical features	- Operation and alarm display with LED - External 15-50 VDC input (parameterization) - Alarm relay - Integrated PI controller - Configurable inputs/outputs (I/O) - MODBUS V6.3 - Motor current limitation - RS-485 MODBUS-RTU - Soft start - Voltage output 3.3-24 VDC, Pmax = 800 mW - Control interface with SELV potential safely disconnected from the mains - Thermal overload protection for electronics/motor - Line undervoltage / phase failure detection
Power Factor Correction (PFC)	Passive (through low-capacitance DC link)
Touch current according to IEC 60990 (measuring circuit Fig. 4, TN system)	<= 3.5 mA
Electrical hookup	Terminal box

Translation of the original operating instructions

Protection class assignment	I; If a protective earth is connected. The built-in component has several local protection class assignments. The final protection class is determined by the intended installation.
Conformity with standards	EN 61800-5-1; CE
Approval	CSA C22.2 No. 77 + CAN/CSA-E60730-1; EAC; UL 1004-7 + 60730-1

With regard to cyclic speed loads, note that the rotating parts of the device are designed for a maximum of one million load cycles. If you have special questions, consult ebm-papst for support.

⇒ Use the device in accordance with its degree of protection.

Information on surface quality

The surfaces of the products conform to the generally applicable industrial standard. The surface quality may change during the production period. This has no effect on strength, dimensional stability and dimensional accuracy.
The color pigments in the paints used perceptibly react to UV light over the course of time. The product is to be protected against UV radiation to prevent the formation of patches and fading. Changes in color are not a reason for complaint and are not covered by the warranty. UV radiation in the frequency range and the intensity of natural solar radiation has no effect on the technical properties of the products.

3.5 Mounting data

Further mounting data can be taken from the product drawing or Chapter 4.1 Mechanical connection as required.

Strength class of screws	8.8

⇒ Secure the screws against unintentional loosening (e.g. use self-locking screws).

3.6 Transport and storage conditions

Max. permitted ambient temp. for motor (transport/ storage)	+80 °C
Min. permitted ambient temp. for motor (transport/ storage)	-40 °C

3.7 Electromagnetic compatibility

EMC immunity to interference	According to EN 61000-6-2 (industrial environment)
EMC interference emission	According to EN 61000-6-3 (household environment), except EN 61000-3-2 for professionally used equipment with a total rated power greater than 1 kW

If several devices are connected in parallel on the supply side so that the line current of the arrangement is in the range 16 - 75 A, this arrangement conforms to IEC 61000-3-12, provided that the short-circuit power S_{sc} at the connection point of the customer system to the public power grid is greater than or equal to 250 times the rated output of the arrangement. It is the responsibility of the installation engineer or operator/owner of the device to ensure, if necessary after consultation with the network operator, that this device is only connected to a connection point with an S_{sc} value greater than or equal to 250 times the rated output of the arrangement.

4. CONNECTION AND STARTUP

4.1 Mechanical connection

CAUTION
Risk of cutting and crushing when removing device from packaging

→ Carefully remove the device from the packaging by grasping hold of the frame. Never subject to any impact.

→ Wear safety shoes and cut-resistant safety gloves.

CAUTION
Device weighs over 25 kg! Heavy load when unpacking device.
Risk of physical injury, such as back injuries.

→ Use suitable hoisting equipment to remove the device from its packaging.

NOTE
Damage to the device from vibration
Bearing damage, shorter service life

→ The fan must not be subjected to force or excessive vibration from sections of the installation.

→ If the fan is connected to air ducts, the connection should be isolated from vibration, e.g. using compensators or similar elements.

→ Ensure stress-free attachment of the fan to the substructure.

⇒ The fan may not be handled in the area around the inlet nozzle during transport and installation.
There is a risk of damage to the impeller.

⇒ Check the device for transport damage. Damaged devices are not to be installed.

⇒ Install the undamaged device in accordance with your application.

4.1.1 Installation of RadiPac fan

Use is always to be made of appropriate hoisting equipment and a suitable lifting device when transporting the fan for installation purposes. Only suitable round slings are to be used for this purpose (see Chapter 3.4 Technical description for weight of product). Use four round slings passed around the struts for lashing purposes. Position the round slings as shown in the hoisting diagram below. Make sure that the struts of the support bracket on the left and right of the motor are vertical. During installation, only transport the fan in the installation position as shown in the product drawing. Heed the information given on the device! During transportation, an acceleration of 2 g must not be exceeded.

Translation of the original operating instructions

ebm-papst Mulfingen GmbH & Co. KGaA & Co. KG · Bachmühle 2 · D-74673 Mulfingen · Phone +49 (0) 7938 81-0 · info1@de.ebmpapst.com · www.ebmpapst.com

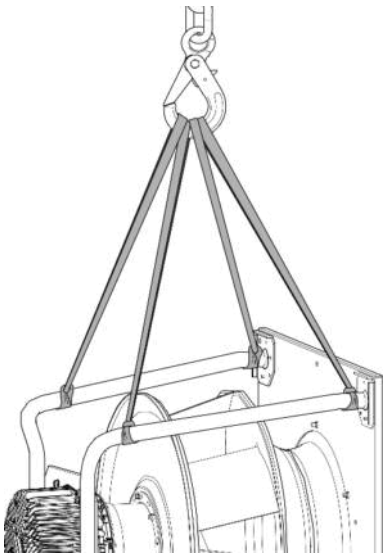

Fig. 1: Hoisting diagram for transportation of RadiPac

CAUTION
Possible damage to the device
If the device slips during installation, serious damage can result.
→ Ensure that the device is securely positioned at its place of installation until all fastening screws have been tightened.

- The fan must not be strained on fastening.

4.2 Electrical connection

DANGER
Voltage on the device
Electric shock
→ Always connect a protective earth first.
→ Check the protective earth.

DANGER
Faulty insulation
Risk of fatal injury from electric shock
→ Use only cables that meet the specified installation regulations for voltage, current, insulation material, capacity, etc.
→ Route cables so that they cannot be touched by any rotating parts.

DANGER
Electrical charge (>50 µC) between phase conductor and protective earth connection after switching off supply with multiple devices connected in parallel.
Electric shock, risk of injury
→ Ensure sufficient protection against accidental contact. Before working on the electrical hookup, short the supply and PE connections.

CAUTION
Voltage
The fan is a built-in component and has no disconnecting switch.
→ Only connect the fan to circuits that can be switched off with an all-pole disconnection switch.
→ When working on the fan, secure the system/machine in which the fan is installed so as to prevent it from being switched back on.

NOTE
Device malfunctions possible
Route the device's control lines separately from the supply line.
→ Maintain the greatest possible clearance.
Recommendation: clearance > 10 cm (separate cable routing)

NOTE
Water ingress into wires or cables
Water ingress at the customer end of the cable can damage the device.
→ Make sure the end of the cable is connected in a dry environment.

Only connect the device to circuits that can be switched off with an all-pole disconnection switch.

4.2.1 Requirements

⇒ Check whether the information on the nameplate matches the connection data.

⇒ Before connecting the device, make sure the power supply matches the device voltage.

⇒ Only use cables designed for the current level indicated on the nameplate.
For determining the cross-section, note the sizing criteria according to EN 61800-5-1. The protective earth must have a cross-section equal to or greater than that of the phase conductor.
We recommend the use of 105 °C cables. Ensure that the minimum cable cross-section is at least
AWG 26 / 0.13 mm².

NOTE
Using a harmonic filter can result in harmful electromagnetic resonance effects.
→ If filters like these are to be used, please utilize support from ebm-papst.

Protective earth contact resistance according to EN 61800-5-1

Compliance with the resistance specifications according to EN 61800-5-1 for the protective earth connection circuit must be verified in the end application. Depending on the installation situation, it may be necessary to connect an additional protective earth conductor by way of the extra protective earth terminal provided on the device. The protective earth terminal is located on the housing and provided with a protective earth symbol and a hole.

4.2.2 Supply connection and fuses

Assignment of supply cable cross-sections and their required fuses (line protection only, no equipment protection).

Nominal voltage	Fuse		Automatic circuit breaker	Cable cross-section	Cable cross-section
	VDE	UL	VDE	mm²	*AWG
3/PE AC 380-480 VAC	16 A	15 A	C16A	1.5	16
3/PE AC 380-480 VAC	20 A	20 A	C20A	2.5	14
3/PE AC 380-480 VAC	25 A	25 A	C25A	4.0	12

* AWG = American Wire Gauge

Translation of the original operating instructions

ebm-papst Mulfingen GmbH & Co. KGaA & Co. KG · Bachmühle 2 · D-74673 Mulfingen · Phone +49 (0) 7938 81-0 · info1@de.ebmpapst.com · www.ebmpapst.com

4.2.3 Reactive currents

Because of the EMC filter integrated for compliance with EMC limits (interference emission and immunity to interference), reactive currents can be measured in the supply line even when the motor is at a standstill and the line voltage is switched on.

- The values are typically in the range < 500 mA.
- At the same time, the effective power in this operating state (operational readiness) is typically < 6 W.

4.2.4 Residual current circuit breaker (RCCB)

If the use of a residual current device (RCD) is required in your installation, only AC/DC-sensitive residual current devices (type B or B+) are permissible. As with variable frequency drives, residual current devices cannot provide personal safety while operating the device. When the device power supply is switched on, pulsed charging currents from the capacitors in the integrated EMC filter can lead to the instant tripping of residual current devices. We recommend the use of residual current circuit breakers (RCCB) with a trip threshold of 300 mA and delayed tripping (super-resistant, characteristic K).

4.2.5 Leakage current

For asymmetrical power systems or if a phase fails, the leakage current can increase to a multiple of the nominal value.

4.2.6 Locked-rotor protection

Due to the locked-rotor protection, the starting current (LRA) is equal to or less than the nominal current (FLA).

4.3 Connection in terminal box

4.3.1 Preparing cables for connection

Only strip the cable as far as necessary, ensuring that the cable gland is sealed and there is no strain on the connections. For tightening torques, see Chapter 3.1 Product drawing.

NOTE
Tightness and strain relief are dependent on the cable used.

→ This must be checked by the user.

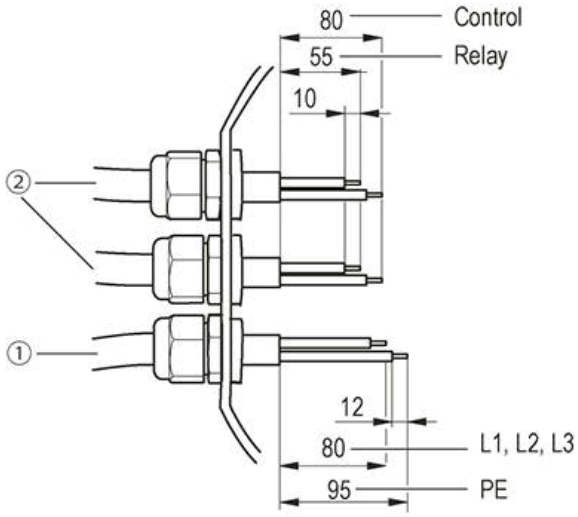

Fig. 2: Recommended stripped lengths (inside terminal box)
(1) supply line (2) control and relay line

4.3.2 Terminal connection data

Supply line

	min.	max.
Rigid cable cross-section	0.2 mm²	4 mm²
Flexible cable cross-section	0.2 mm²	4 mm²
AWG/kcmil cable cross-section	24	12
Wire-end ferrules with insulating collar, in accordance with DIN 46228-4 for flexible cable	0.25 mm²	4 mm²
Wire-end ferrules without insulating collar, in accordance with DIN 46228-1 for flexible cable	0.25 mm²	4 mm²

NOTE
The cable and cable cross-section must be selected taking into account the max. starting current of the drive and the type of cable routing (see Chapter 4.2.2 Supply connection and fuses)

Control and relay cables

	min.	max.
Rigid cable cross-section	0.2 mm²	1.5 mm²
Flexible cable cross-section	0.2 mm²	1.5 mm²
AWG/kcmil cable cross-section	24	16
Wire-end ferrules with insulating collar, in accordance with DIN 46228-4 for flexible cable	0.14 mm²	0.75 mm²

Translation of the original operating instructions

ebm-papst Mulfingen GmbH & Co. KGaA & Co. KG · Bachmühle 2 · D-74673 Mulfingen · Phone +49 (0) 7938 81-0 · info1@de.ebmpapst.com · www.ebmpapst.com

Wire-end ferrules without insulating collar, in accordance with DIN 46228-1 for flexible cable	0.25 mm²	1.5 mm²

NOTE
Crimping and pressing forms of the wire-end ferrules
For flexible control and relay cables, from a cable cross-section of 1.0 mm², a trapezoid crimp is required to ensure correct installation on the connector.

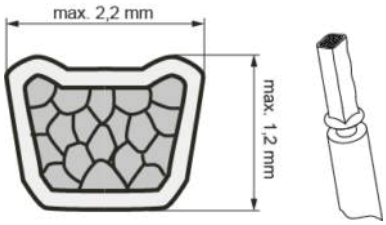

Fig. 3: Trapezoid crimp

4.3.3 Connect cables to terminals

WARNING
Live terminals and connections even with device switched off
Electric shock

→ Wait five minutes after disconnecting the voltage at all poles before opening the device.

- ⇒ Open the terminal box.
- ⇒ Remove the cap from the cable gland.
- ⇒ Only remove caps where cables are fed in.

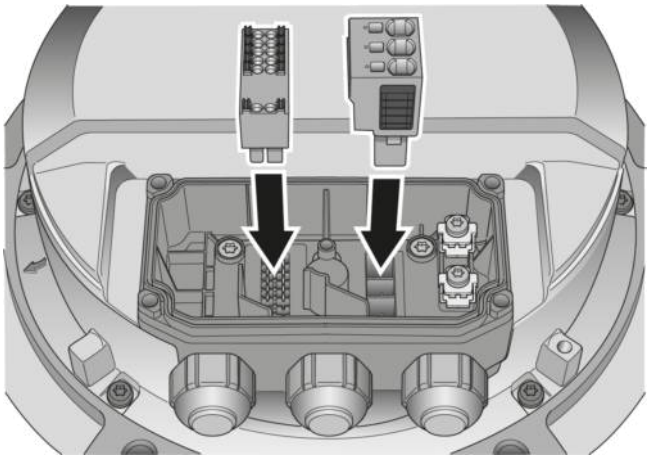

Fig. 4: Installing the connectors in the terminal box. The connectors must engage properly.

- ⇒ Depending on the cable diameter, the seals included in the terminal box must be inserted into the cable gland if necessary.
- ⇒ Route the cable(s) (not included in the scope of delivery) into the terminal box.
- ⇒ Ensure separate routing of the supply cable(s) and the cables for status contact and control interface. Depending on the requirements for the end device, the physical separation of these cables in the terminal box may be mandatory. Use the partitions inside the terminal box as an aid to routing for this purpose.
- ⇒ First connect the protective earth "PE". Tightening torque 3.5 ±0.4 Nm
- ⇒ Connect the cables to the corresponding terminals. Use a screwdriver to do so. When connecting, make sure the wires do not splay out. Insert the strands until they meet with resistance.

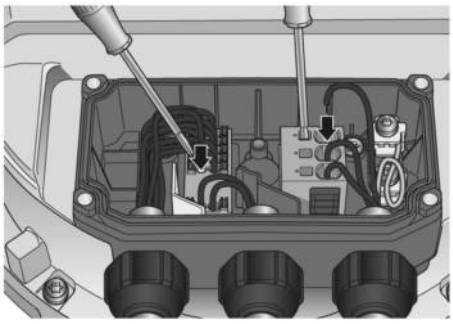

Fig. 5: Connection of cables at terminals

- ⇒ There must not be any tensile stress between the terminal and the cable gland. The cable must be provided with strain relief.
- ⇒ The cable glands must be tight.
- ⇒ Fit the terminal box cover, making sure that the sealing surfaces are clean.
- ⇒ Screw in the four screws (for tightening torque, see Chapter 3.1 Product drawing).

4.3.4 Cable routing

Water must be prevented from reaching the cable gland along the cable.

NOTE
Damage caused by moisture penetration.
Moisture can penetrate into the terminal box if water is constantly present at the cable glands.

→ To prevent the constant accumulation of water at the cable glands, the cable should be routed in a U-shaped loop wherever possible.

→ If this is not possible, a drip edge can be produced by fitting a cable tie directly in front of the cable gland for example.

Translation of the original operating instructions

ebm-papst Mulfingen GmbH & Co. KGaA & Co. KG · Bachmühle 2 · D-74673 Mulfingen · Phone +49 (0) 7938 81-0 · info1@de.ebmpapst.com · www.ebmpapst.com

4.4 Connection diagram

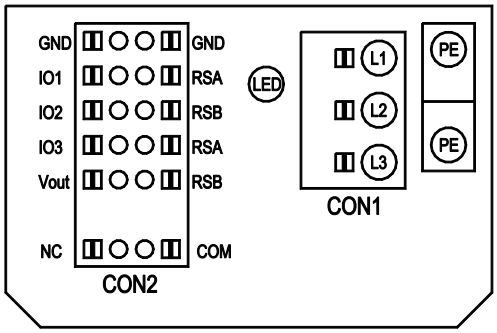

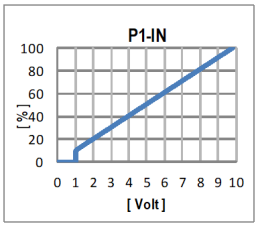

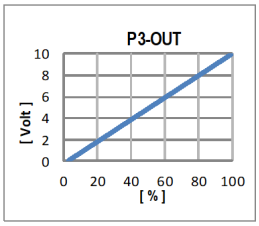

No.	Conn.	Designation	Function/assignment
	CON1	**L1, L2, L3**	Power supply, phase, see nameplate for voltage range
	PE	**PE**	Protective earth
	CON2	**RSA**	RS485 interface for MODBUS, RSA; SELV
	CON2	**RSB**	RS485 interface for MODBUS, RSB; SELV
	CON2	**GND**	Reference ground for control interface, SELV
	CON2	**IO1**	Function parameterizable (see “Optional interface functions” table) Factory setting: Digital input - high active, function: Disable input, SELV - inactive: Pin open or applied voltage < 1.5 VDC - active: applied voltage 3.5-50 VDC Reset function: Triggering of error reset on change of state from "enabled" to "disabled"
	CON2	**IO2**	Function parameterizable (see “Optional interface functions” table) Factory setting: Analog input 0-10 V / PWM, Ri=100 kΩ, function: Set value Characteristic curve parameterizable (see input characteristic curve P1-IN), SELV
	CON2	**IO3**	Function parameterizable (see “Optional interface functions” table) Factory setting: Analog output 0-10 V, max. 5 mA, function: Fan modulation level Characteristic curve parameterizable (see output characteristic curve P3-OUT), SELV
	CON2	**Vout**	Voltage output 3.3-24 VDC ±5%, Pmax=800 mW, voltage parameterizable Factory setting: 10 VDC short-circuit-proof, supply for external devices, SELV alternatively: 15-50 VDC input for parameterization via MODBUS without line voltage
	CON2	**COM**	Status relay, floating status contact, common connection, contact rating 250 VAC / 2 A (AC1) / min. 10 mA, reinforced insulation on supply side and on control interface side
	CON2	**NC**	Status relay, floating status contact, break for failure
		LED	green: status = good, ready for operation orange: status = warning red: status = failure
		P1-IN	Input characteristic curve
		P3-OUT	Output characteristic curve

Translation of the original operating instructions

ebm-papst Mulfingen GmbH & Co. KGaA & Co. KG · Bachmühle 2 · D-74673 Mulfingen · Phone +49 (0) 7938 81-0 · info1@de.ebmpapst.com · www.ebmpapst.com

4.5 Configuration options

○ configurable option

For further information and additional functions see EC Control Software, Fan-Set-App, or MODBUS Parameter Specification V6.3

CON2	configurable IO mode	electrical specification	MODBUS Register for IO mode configuration	configurable IO functions: normal / inverse	D101 [...]	D147 [...]	D104 [...]	D12E [...]	D148 [...]	D16C [...]	D16A [...]	(selected directly via IO mode)	(selected directly via IO mode)	D130 [0]	D130 [1]	D130 [2]	D130 [5]	D00C [1]	D130 [4]
					INPUT								OUTPUT						
					source: set value	source: sensor value	switch: parameter set: #1 / #2	switch: control function: heating (pos.) / cooling (neg.)	switch: direction of rotation: cw / ccw	switch: set value source	switch: fan enable / disable	signal: tach out	signal: diagnostics out	signal: fan modulation level %	signal: actual speed	signal: system modulation level %	signal: remote control output 0-10V	pulse input for auto-adressing	pulse output for auto-adressing
IO1	○ **Din1 (active high)**: digital input	active: applied voltage 3,5-50VDC, SELV not active: pin open or applied voltage < 1,5VDC	D158 [0]				○	○	○	○	○							○	
IO1	○ **Ain1 0-10V/PWM**: analog input	Ri = 100K, characteristic curve parameterizable, f_{PWM} = 1k..10KHz, SELV	D158 [2]		○	○													
IO1	○ **Tach out** (open collector output)	Umax = 50VDC, Imax = 20mA, SELV	D158 [5]									○							
IO1	○ **Diagnostics out** (open collector output)	Umax = 50VDC, Imax = 20mA, SELV	D158 [6]										○						
IO2	○ **Din2 (active high)**: digital input	active: applied voltage 3,5-50VDC, SELV not active: pin open or applied voltage < 1,5VDC	D159 [0]				○	○	○	○	○								
IO2	○ **Ain2 0-10V/PWM**: analog input	Ri = 100K, characteristic curve parameterizable, f_{PWM} = 1k..10KHz, SELV	D159 [2]		○	○													
IO2	○ **Ain2 4-20mA**: analog input	Ri = 125R, characteristic curve parameterizable, SELV	D159 [3]																
IO3	○ **Din3 (active high)**: digital input	active: applied voltage 3,5-50VDC, SELV not active: pin open or applied voltage < 1,5VDC	D15A [0]				○	○	○	○	○								
IO3	○ **Din3 (active low)**: digital input	active: applied voltage < 1,5VDC, SELV not active: pin open or applied voltage 3,5-50VDC	D15A [1]																
IO3	○ **PWMin3**: digital input, idle level high	PWM = 40Hz - 10kHz, characteristics parameterizable active: pin open or applied voltage 3,5-50VDC not active: applied voltage < 1,5VDC, SELV	D15A [7]		○														
IO3	○ **PWMin3**: digital input, idle level low	40Hz - 10kHz, characteristics parameterizable active: applied voltage 3,5-50VDC not active: pin open or applied voltage < 1,5VDC, SELV	D15A [8]		○														
IO3	○ **Aout3 0-10V**: analog output	function parameterizable, max. 5mA, max output frequency 300Hz, SELV	D15A [4]											○	○	○	○		○
IO3	○ **Tacho out** (pulses), analog output	0-10V max. 5mA, max output frequency 300Hz, SELV	D15A [5]									○							
IO3	○ **Diagnostics out** (pulses)	0-10V max. 5mA, max output frequency 300Hz, SELV	D15A [6]										○						
RSA RSB	RS485 bus connection,	MODBUS RTU, specification V6.3, SELV			○		○	○	○	○	○								
Vout	voltage output	voltage parameterizable 3,3...24VDC +/- 5%, Pmax=800mW, short-circuit-proof, supply for external devices, SELV	D16E [...]																
Vout	alternatively: Input auxillary power supply for parameterization via RS485/MODBUS RTU without line voltage	15...50VDC																	

ebmpapst Mulfingen GmbH & Co. KGaA & Co. KG · Bachmühle 2 · D-74673 Mulfingen · Phone +49 (0) 7938 81-0 · info1@de.ebmpapst.com · www.ebmpapst.com

4.6 Equivalent circuit diagrams

Hardware

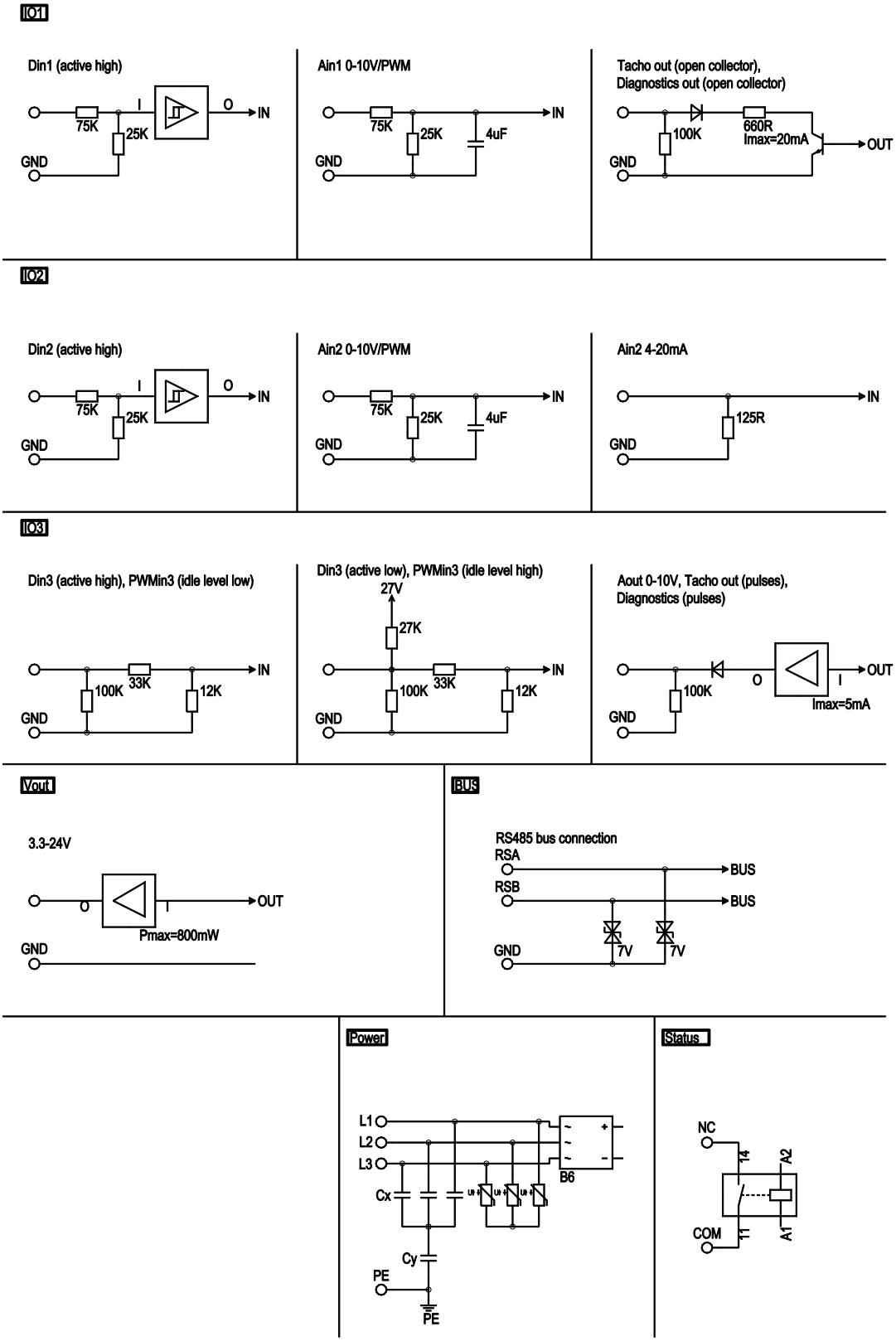

Translation of the original operating instructions

ebm-papst Mulfingen GmbH & Co. KGaA & Co. KG · Bachmühle 2 · D-74673 Mulfingen · Phone +49 (0) 7938 81-0 · info1@de.ebmpapst.com · www.ebmpapst.com

4.7 Checking connections

- ⇒ Ensure isolation from supply (all phases).
- ⇒ Make sure a restart is impossible
- ⇒ Check the cables for proper fit.
- ⇒ Screw the terminal box cover back on again. Terminal box tightening torque, see Chapter 3.1 Product drawing.
- ⇒ Route the cables in the terminal box so that the terminal box cover closes without resistance.
- ⇒ Use all screw plugs. Insert the screws by hand to avoid damage to the threads.
- ⇒ Make sure the terminal box is completely closed and sealed and that all screws and cable glands have been properly tightened.

4.8 Switching on the device

The device may only be switched on if it has been installed properly and in accordance with its intended use, including the required safety mechanisms and professional electrical hookup. This also applies for devices which have already been equipped with plugs and terminals or similar connectors by the customer.

WARNING
Hot motor housing
Risk of fire

→ Ensure that no combustible or flammable materials are located close to the fan.

- ⇒ Before switching on, check the device for visible external damage and make sure the protective devices are functional.
- ⇒ Check the fan's air flow paths for foreign matter and remove any foreign matter found.
- ⇒ Apply the nominal supply voltage.
- ⇒ Start the device by changing the input signal.

NOTE
Damage to the device from vibration
Bearing damage, shorter service life

→ Low-vibration operation of the fan must be ensured over the entire speed control range.

→ Severe vibration can arise for instance from inexpert handling, transportation damage and resultant imbalance or be caused by component or structural resonance.

→ Speed ranges with excessively high vibration levels and possibly resonant frequencies must be determined in the course of fan commissioning.

→ Either run through the resonant range as quickly as possible with speed control or find another remedy.

→ Operation with excessively high vibration levels can lead to premature failure.

→ After installation and after commissioning, qualified personnel must regularly check the fan unit for mechanical vibrations.# Please refer to ISO 14694 for the limit values applicable for the fan category.

→ If the limit values are exceeded, the fan unit must be checked as a whole and possibly re-balanced.

→ For information on the measurement, see Chapter 6.2 Vibration testing

4.9 Switching off the device

Switching off the device during operation:

- ⇒ Switch off the device via the control input.
- ⇒ Do not switch the motor (e.g. in cyclic operation) on and off via power supply.

Switching off the device for maintenance:

- ⇒ Switch off the device via the control input.
- ⇒ Do not switch the motor (e.g. in cyclic operation) on and off via power supply.
- ⇒ Disconnect the device from the power supply.
- ⇒ When disconnecting, be sure to disconnect the ground connection last.

5. INTEGRATED PROTECTIVE FEATURES

The integrated protective functions cause the motor to switch off automatically in the event of the faults described in the table.

Fault	Safety feature description/ function
Rotor position detection error	An automatic restart follows.
Blocked rotor	⇒ After the blockage is removed, the motor restarts automatically.
Line undervoltage (line voltage outside of permitted nominal voltage range)	⇒ If the line voltage returns to permitted values, the motor restarts automatically.
Phase failure	A phase of the supply voltage fails for at least 5 s. ⇒ When all phases are correctly supplied again, the motor automatically restarts after 10-40 s.

Translation of the original operating instructions

ebm-papst Mulfingen GmbH & Co. KGaA & Co. KG · Bachmühle 2 · D-74673 Mulfingen · Phone +49 (0) 7938 81-0 · info1@de.ebmpapst.com · www.ebmpapst.com

6. MAINTENANCE, MALFUNCTIONS, POSSIBLE CAUSES AND REMEDIES

Do not perform any repairs on your device. Send the device to ebm-papst for repair or replacement.

WARNING
Live terminals and connections even with device switched off
Electric shock

→ Wait five minutes after disconnecting the voltage at all poles before opening the device.

CAUTION
If control voltage or a stored speed set value is applied, the motor will restart automatically, e.g. after a power failure.
Risk of injury

→ Keep out of the device's danger zone.

→ When working on the device, switch off the line voltage and ensure that it cannot be switched back on.

→ Wait until the device comes to a stop.

→ After working on the device, remove any tools or other objects from the device.

NOTE
If the device is not operated for a lengthy period in installed condition in a dry environment, it is to be started up and operated at full speed for one hour at least every four months. If the device is not operated for a lengthy period in installed condition in a damp environment (e.g. outdoors), it is to be started up and operated at full speed for at least three hours once a month to move the bearings and allow any condensate that may have ingressed to evaporate.

Malfunction/fault	Possible cause	Possible remedy
Impeller not running smoothly	Imbalance in rotating parts	Clean the device; replace it if imbalance persists after cleaning. Make sure no weight clips are removed during cleaning.
Motor not turning	Mechanical blockage	Switch off, isolate from supply and remove mechanical blockage.
	Line voltage faulty	Check line voltage, restore power supply. Attention! The error message resets automatically. Device restarts automatically without warning.
	Faulty connection	Isolate from supply, correct connection; see connection diagram.
	Broken motor winding	Replace device
	Inadequate cooling	Improve cooling. Allow the device to cool down.
	Ambient temperature too high	Reduce the ambient temperature. Allow the device to cool down.
	Impermissible operating point (e.g. back pressure too high)	Correct the operating point. Allow the device to cool down.

In the event of further malfunctions, contact ebm-papst.

6.1 Warning/status codes

The LED on the electronics housing shows the motor status with various colors and flash codes. The flash codes have a frequency of 2 Hz. Each flash code is followed by a pause lasting 3 seconds. The following colors are used: Green: no warning or fault. Orange: There is a warning. No user intervention is required for warnings. Red: There is at least one error. See the following table. If there are multiple simultaneous errors, their associated flash codes are displayed in succession. If there are simultaneous warnings and errors, only the errors are displayed.

6.1.1 Warning codes

Number of pulses	Motor status - LED orange	Message at status relay
1	Current limitation in action	
2	Line impedance too high (DC-link voltage unstable)	
3	Power limiter in action	
4	Output stage temperature high	
5	Motor temperature high	
6	Temperature inside electronics high	
7	DC-link voltage low	
8	Braking mode: set in case of external drive in opposite direction at high speed for lengthy period	Yes
9	Calibration of rotor position sensor in progress	Yes
10	Actual speed is lower than run monitoring speed limit	Yes
11	Open circuit at analog input or PWM input for the set value	Yes
12	Write access to holding registers blocked	
13	DC-link voltage high	
14	Device is in "Disabled" state	
15	Line voltage high	
16	Shake-loose function activated	

Translation of the original operating instructions

ebm-papst Mulfingen GmbH & Co. KGaA & Co. KG · Bachmühle 2 · D-74673 Mulfingen · Phone +49 (0) 7938 81-0 · info1@de.ebmpapst.com · www.ebmpapst.com

6.1.2 Status codes

Manual reset by "Switch off line voltage - wait briefly - switch line voltage back on" or, if provided,
via the "Fan enable/disable" input

Number of pulses	Motor status - LED red	Possible cause	Possible remedy
1	Phase failure or line undervoltage	Missing phase Poor power supply quality	Check line voltage
3	Output stage overheating	Electronics housing contaminated	Provide better cooling. Manual reset required
4	Communication error between master controller and slave controller	External supply applied via Vout for setting parameters. Internal error	Switch off line voltage - wait - switch back on
6	Motor overheating	Ambient temperature too high Impermissible operating point	Reduce ambient temperature Correct operating point. Manual reset required
7	Hall sensor error	Internal error	Switch off line voltage - wait - switch back on
8	Motor blocked	Mechanical blockage	Switch off - check safe isolation from supply - check freedom of movement of rotor
9	Speed limit exceeded	-	-
11	Rotor position sensor calibration error	Observe ebm-papst replacement instructions	Rotor position sensor calibration necessary. Notify ebm-papst
13	DC-link undervoltage	Line voltage not OK	Check the line voltage applied.

6.2 Vibration testing

Checking of fan for mechanical vibration based on ISO 14694. Recommendation: Every 6 months. Please refer to ISO 14694 for the limit values applicable for the fan category. If the limit values are exceeded, the fan unit as a whole must be checked and suitable measures may have to be taken to reduce the vibrations that occur. The vibration severity is measured at the motor fastening diameter on the motor support plate in the direction of the motor axis of rotation and perpendicular to it.

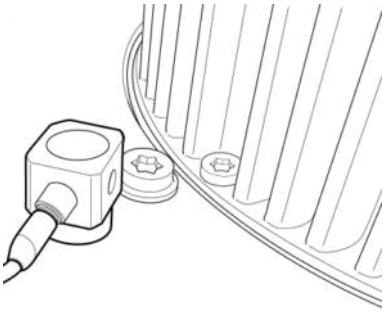

Fig. 6: ebm-papst recommends the use of a vibration sensor that takes measurements in all three directions from one measuring point (triaxial sensor).

6.3 Cleaning

To ensure a long service life, check the fans regularly for proper operation and soiling. The frequency of checking is to be adapted accordingly depending on the degree of soiling.

DANGER
Risk of injury from rotating fan.

→ Only clean when not in motion. Do not disconnect the fan from the power supply, just switch it off via the control input. This will prevent start-up of the fan.

- ⇒ Dirt deposits on the motor housing can cause overheating of the motor.
- ⇒ Soiling of the impeller can cause vibration that will shorten the service life of the fan.
- ⇒ Severe vibration can destroy the fan.
- ⇒ In such cases, switch off the fan immediately and clean it.
- ⇒ The preferred method of cleaning is dry cleaning, e.g. using compressed air.
- ⇒ Do not use aggressive cleaning agents!

NOTE
Damage to the device during cleaning
Malfunction possible

→ Do not clean the device using a high-pressure cleaner.# Do not use acid, alkali or solvent-based cleaning agents.

→ Do not use any pointed or sharp-edged objects for cleaning.

- ⇒ Completely remove any cleaning agents used.
- ⇒ If severe corrosion is visible on load-bearing or rotating parts, switch off the device immediately and replace it.
- ⇒ Repair of load-bearing or rotating parts is not permitted!
- ⇒ Operate the fan for 2 hours at maximum speed so that any water that has ingressed can evaporate.
- ⇒ If cleaning does not eliminate vibrations, the fan may need to be rebalanced. To have it rebalanced, contact ebm-papst.
- ⇒ The fan is equipped with maintenance-free ball bearings. The lifetime lubrication of the ball bearings is designed for a service life of 40,000 hours.
- ⇒ Adapt the maintenance intervals to the actual level of dust exposure.

Translation of the original operating instructions

ebm-papst Mulfingen GmbH & Co. KGaA & Co. KG · Bachmühle 2 · D-74673 Mulfingen · Phone +49 (0) 7938 81-0 · info1@de.ebmpapst.com · www.ebmpapst.com

6.4 Safety inspection

NOTE
High-voltage test
The integrated EMC filter has Y capacitors. The tripping current is exceeded when AC testing voltage is applied.

→ Test the device with DC voltage when you perform the legally required high-voltage test. The voltage to be used corresponds to the peak value of the AC voltage required by the standard.

What to check	How to check	How often	What action?
Contact protection cover for intactness or damage	Visual inspection	At least every 6 months	Repair or replacement of device
Device for damage to blades and housing	Visual inspection	At least every 6 months	Replacement of device
Fastening the cables	Visual inspection	At least every 6 months	Fasten
Insulation of cables for damage	Visual inspection	At least every 6 months	Replace cables
Impeller for wear/deposits/ corrosion and damage	Visual inspection	At least every 6 months	Clean impeller or replace device
Tightness of cable gland	Visual inspection	At least every 6 months	Retighten, replace if damaged
Condensation drainage holes for clogging, where necessary	Visual inspection	At least every 6 months	Open holes
Abnormal bearing noise	acoustic	At least every 6 months	Replace device
Vibration test	Vibration tester, start-up or deceleration measurement	Recommended every 6 months	Clean impeller or replace device

6.5 Disposal

For ebm-papst, environmental protection and resource preservation are top priority corporate goals.
ebm-papst operates an environmental management system which is certified in accordance with ISO 14001 and rigorously implemented around the world on the basis of German standards.
Right from the development stage, ecological design, technical safety and health protection are fixed criteria.
The following section contains recommendations for ecological disposal of the product and its components.

6.5.1 Country-specific legal requirements

NOTE
Country-specific legal requirements
Always observe the applicable country-specific legal regulations with regard to the disposal of products or waste occurring in the various phases of the life cycle. The corresponding disposal standards are also to be heeded.

6.5.2 Disassembly

Disassembly of the product must be performed or supervised by qualified personnel with the appropriate technical knowledge.
The product is to be disassembled into suitable components for disposal employing standard procedures for motors.

WARNING
Heavy parts of the product may drop off. Some of the product components are heavy. These components could drop off during disassembly.
This can result in fatal or serious injury and material damage.

→ Secure components before unfastening to stop them falling.

6.5.3 Component disposal

The products are mostly made of steel, copper, aluminum and plastic. Metallic materials are generally considered to be fully recyclable. Separate the components for recycling into the following categories:

- Steel and iron
- Aluminum
- Non-ferrous metal, e.g. motor windings
- Plastics, particularly with brominated flame retardants, in accordance with marking
- Insulating materials
- Cables and wires
- Electronic scrap, e.g. circuit boards

Only ferrite magnets, and no rare-earth magnets, are used in external rotor motors from ebm-papst Mulfingen GmbH & Co. KGaA & Co. KG.

⇒ Ferrite magnets can be disposed of in the same way as normal iron and steel.

Electrical insulating materials on the product, in cables and wires are made of similar materials and are therefore to be treated in the same manner.
The materials concerned are as follows:

- Miscellaneous insulators used in the terminal box
- Power cables
- Cables for internal wiring
- Electrolytic capacitors

Dispose of electronic components employing the proper procedures for electronic scrap.

→ Please contact ebm-papst for any other questions on disposal.

Translation of the original operating instructions

ebm-papst Mulfingen GmbH & Co. KGaA & Co. KG · Bachmühle 2 · D-74673 Mulfingen · Phone +49 (0) 7938 81-0 · info1@de.ebmpapst.com · www.ebmpapst.com