# Operating instructions

**ebm-papst Mulfingen GmbH & Co. KGaA & Co. KG**
Bachmühle 2
74673 Mulfingen
Phone +49 (0) 7938 81-0
info1@de.ebmpapst.com
www.ebmpapst.com

## CONTENTS

**1. SAFETY REGULATIONS AND INFORMATION 1**
1.1 Hazard levels for warnings 1
1.2 Staff qualifications 1
1.3 Basic safety rules 1
1.4 Voltage 2
1.5 Safety and protective features 2
1.6 Electromagnetic radiation 2
1.7 Mechanical movement 2
1.8 Emissions 2
1.9 Hot surface 2
1.10 Transport 2
1.11 Storage 3

**2. INTENDED USE 3**

**3. TECHNICAL DATA 4**
3.1 Product drawing 4
3.2 Nominal data 5
3.3 Data according to Commission Regulation (EU) 327/2011 5
3.4 Technical description 5
3.5 Mounting data 6
3.6 Transport and storage conditions 6
3.7 Electromagnetic compatibility 6

**4. CONNECTION AND STARTUP 6**
4.1 Mechanical connection 6
4.2 Electrical connection 7
4.3 Connection in terminal box 8
4.4 Connection diagram 10
4.5 Checking connections 12
4.6 Switching on the device 12
4.7 Switching off the device 12

**5. INTEGRATED PROTECTIVE FEATURES 12**

**6. MAINTENANCE, MALFUNCTIONS, POSSIBLE CAUSES AND REMEDIES 13**
6.1 Vibration testing 13
6.2 Cleaning 14
6.3 Safety inspection 14
6.4 Disposal 14

## 1. SAFETY REGULATIONS AND INFORMATION

Read these operating instructions carefully before starting work on the device. Observe the following warnings to prevent malfunctions or danger to persons.
These operating instructions are to be regarded as part of the device. The device is only to be sold or passed on together with the operating instructions.
These operating instructions may be duplicated and distributed to inform about potential dangers and their prevention.

### 1.1 Hazard levels for warnings

These operating instructions use the following hazard levels to indicate potentially hazardous situations and important safety regulations:

**DANGER**
Indicates an imminently hazardous situation which will result in death or serious injury if the specified actions are not taken. Compliance with the instructions is imperative.

**WARNING**
Indicates a potentially hazardous situation which can result in death or serious injury if the specified actions are not taken. Exercise extreme caution while working.

**CAUTION**
Indicates a potentially hazardous situation which can result in minor or moderate injury or damage to property if the specified actions are not taken.

**NOTE**
A potentially harmful situation can occur and, if not avoided, can lead to property damage.

### 1.2 Staff qualifications

The device may only be transported, unpacked, installed, operated, maintained and otherwise used by suitably qualified, trained and authorized technical staff.
Only authorized specialists are permitted to install the device, to carry out a test run and to perform work on the electrical installation.

### 1.3 Basic safety rules

The safety hazards associated with the device must be assessed again following installation in the final product.
The locally applicable industrial safety regulations are always to be observed when working on the device.
Keep the workplace clean and tidy. Untidiness in the work area increases the risk of accidents.
Note the following when working on the device:

⇒ Do not perform any modifications, additions or conversions on the device without the approval of ebm-papst.

**WARNING**
To reduce the risk of fire, electric shock or injury to people, do not use any replacement or add-on parts that have not been approved by ebm-papst (e.g. parts manufactured with a 3D printer).

Translation of the original operating instructions

## 1.4 Voltage

⇒ Check the device's electrical equipment at regular intervals; see Chapter 6.3 Safety inspection.

⇒ Replace loose connections and defective cables immediately.

**DANGER**
**Electrically charged device**
Risk of electric shock

→ When working on an electrically charged device, stand on a rubber mat.

**WARNING**
**Live terminals and connections even with device switched off**
Electric shock

→ Wait five minutes after disconnecting the voltage at all poles before opening the device.

**CAUTION**
**In the event of a fault, the rotor and the impeller will be energized**
The rotor and the impeller have basic insulation.

→ Do not touch the rotor and impeller once installed.

**CAUTION**
**If control voltage or a stored speed set value is applied, the motor will restart automatically, e.g. after a power failure.**
Risk of injury

→ Keep out of the device's danger zone.

→ When working on the device, switch off the line voltage and ensure that it cannot be switched back on.

→ Wait until the device comes to a stop.

→ After working on the device, remove any tools or other objects from the device.

## 1.5 Safety and protective features

**DANGER**
**Guard missing and guard not functioning**
Without a guard, hands may become caught up in the device during operation for example, resulting in serious injury. Loose parts or items of clothing could be drawn in.

→ The device is a built-in component. As the owner, you are responsible for ensuring that the device is adequately safeguarded.# Operate the device only with a fixed protective device and guard grill.

→ Stop the device immediately if a protective device is found to be missing or ineffective.

## 1.6 Electromagnetic radiation

Interference from electromagnetic radiation is possible, e.g. in conjunction with open- and closed-loop control devices.
If impermissible radiation levels occur following installation, appropriate shielding measures have to be taken by the user.

**NOTE**
**Electrical or electromagnetic interference after installing the device in customer equipment.**

→ Verify that the entire setup is EMC-compliant.

## 1.7 Mechanical movement

**DANGER**
**Rotating device**
Risk of injury to body parts coming into contact with the rotor or the impeller.

→ Secure the device against accidental contact.

→ Before working on the system/machine, wait until all parts have come to a standstill.

**DANGER**
**Ejected parts**
Missing protective devices may cause balancing weights or broken fan blades to be ejected and cause injuries.

→ Take appropriate safety measures.

**WARNING**
**Rotating device**
Long hair and dangling items of clothing, jewelry and the like can become entangled and be pulled into the device. Injuries can result.

→ Do not wear any loose-fitting or dangling clothing or jewelry while working on rotating parts.

→ Protect long hair with a cap.

## 1.8 Emissions

**WARNING**
**Depending on the installation and operating conditions, the sound pressure level may exceed 70 dB(A).**
Risk of noise-induced hearing loss

→ Take appropriate technical safety measures.

→ Protect operating personnel with appropriate safety equipment such as hearing protection.

→ Also observe the requirements of local agencies.

## 1.9 Hot surface

**CAUTION**
**High temperature on electronics housing**
Risk of burns

→ Ensure sufficient protection against accidental contact.

## 1.10 Transport

**WARNING**
**Transporting the fan**
Injuries from tipping or slipping

→ The fan is always to be transported with care and in its original packaging.

→ If set down too hard or at an angle for example, the impact can lead to bearing damage or deformation of the frame or impeller.

→ It must be ensured that the fans cannot tip over during transportation and handling.

→ Secure the fan(s) with appropriate equipment such as a lashing strip so that nothing can slip or tip, especially when stacking multiple fans.

→ Also make allowance for possible wind forces.

Translation of the original operating instructions



ebm-papst Mulfingen GmbH & Co. KGaA & Co. KG · Bachmühle 2 · 74673 Mulfingen · Phone +49 (0) 7938 81-0 · info1@de.ebmpapst.com · www.ebmpapst.com

### 1.11 Storage

⇒ Store the device, partially or fully assembled, in a dry place, protected against the weather and free from vibration, in the original packaging in a clean environment.

⇒ Protect the device against environmental effects and dirt until final installation.

⇒ We recommend storing the device for no longer than one year in order to guarantee trouble-free operation and the longest possible service life.

⇒ Even devices explicitly intended for outdoor use are to be stored as described prior to commissioning.

⇒ Maintain the storage temperature, see Chapter 3.6 Transport and storage conditions.

⇒ Make sure that all cable glands are fitted with dummy plugs.

## 2. INTENDED USE

The device is exclusively designed as a built-in device for conveying air according to its technical data.
Any other usage above and beyond this does not conform with the intended purpose and constitutes misuse of the device.
Customer equipment must be capable of withstanding the mechanical and thermal stresses that can arise from this product. This applies for the entire service life of the equipment in which this product is installed.

**Intended use also includes**

- Using the device only in power systems with grounded neutral (TN/TT power systems).
- The device is to be used in networks with network quality characteristics as per EN 50160.
- Using the device only in stationary systems.
- Performing all maintenance work.
- Conveying air at an ambient air pressure between 800 mbar and 1050 mbar.
- Using the device within the permitted ambient temperature range; see Chapter 3.6 Transport and storage conditions and Chapter 3.2 Nominal data.
- Operating the device with all protective devices.
- Following the operating instructions.

**Improper use**

In particular, operating the device in the following ways is prohibited and could be hazardous:

- Operating the device in an unbalanced state, e.g. due to dirt deposits or ice formation.
- Resonant operation, operation with severe vibration. This also includes vibration transmitted to the fan from the customer installation.
- Operation in medical equipment with a life-sustaining or life-support function.
- Conveying solids in the flow medium.
- Painting the device
- Connections (e.g. screws) coming loose during operation.
- Opening the terminal box during operation.
- Conveying air that contains abrasive particles.
- Conveying highly corrosive air, e.g. salt spray. Exception: devices designed for salt spray and correspondingly protected.
- Conveying air with high dust content, e.g. suctioning off sawdust.
- Operating the device close to flammable materials or components.
- Operating the device in an explosive atmosphere.
- Using the device as a safety component or to perform safety-related functions.
- Operation with completely or partially disassembled or manipulated protective devices.
- In addition, all applications not listed among the intended uses.

Translation of the original operating instructions

## 3. TECHNICAL DATA

### 3.1 Product drawing

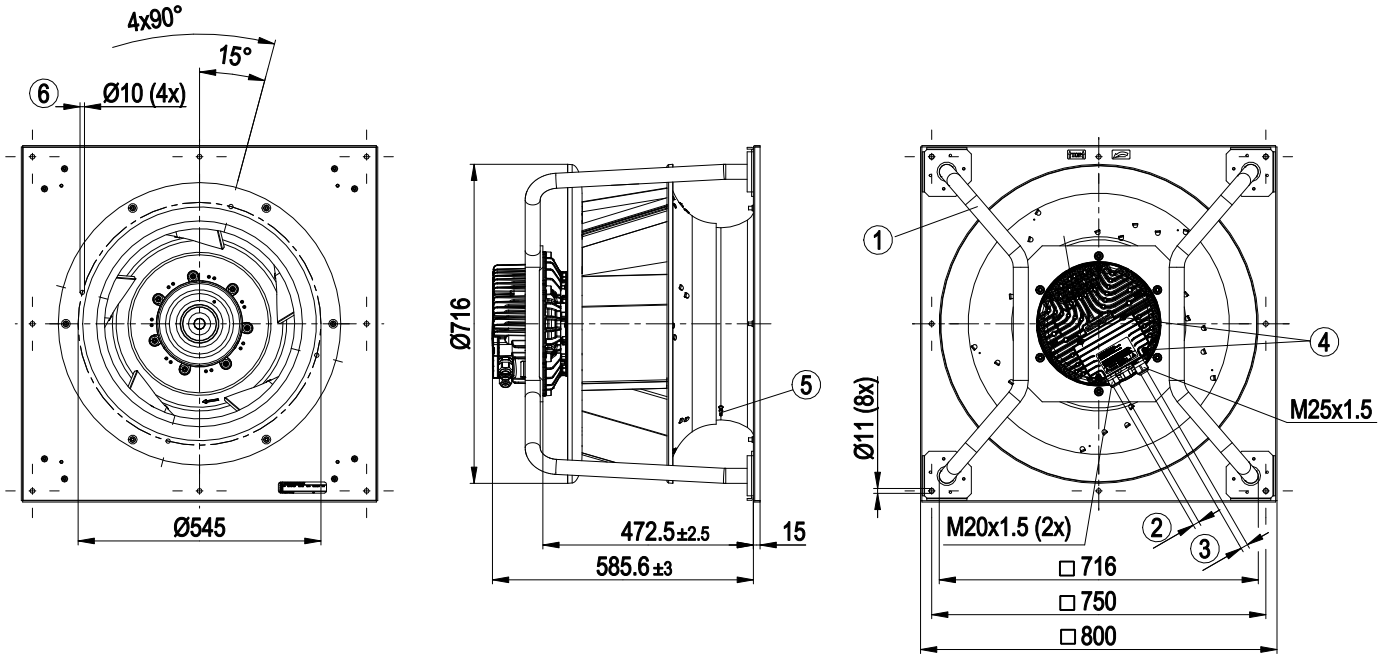


All dimensions in mm.

| | |
|---|---|
| **1** | Installed position: shaft horizontal (install support struts only vertically as illustrated) or rotor on bottom; rotor on top on request |
| **2** | Cable diameter min. 4 mm, max. 10 mm, tightening torque 4 ± 0.6 Nm |
| **3** | Cable diameter min. 9 mm, max. 16 mm, tightening torque 6 ± 0.9 Nm |
| **4** | Tightening torque 3.5±0.5 Nm |
| **5** | Inlet ring with pressure tap (k-factor: 438) |
| **6** | Mounting holes for FlowGrid |

Translation of the original operating instructions



ebm-papst Mulfingen GmbH & Co. KGaA & Co. KG · Bachmühle 2 · 74673 Mulfingen · Phone +49 (0) 7938 81-0 · info1@de.ebmpapst.com · www.ebmpapst.com

### 3.2 Nominal data

| | |
|---|---|
| **Motor** | M3G150-NA |

| | |
|---|---|
| **Phase** | 3~ |
| **Nominal voltage / VAC** | 400 |
| **Nominal voltage range / VAC** | 380 .. 480 |
| **Frequency / Hz** | 50/60 |

| | |
|---|---|
| **Method of obtaining data** | me |
| **Speed (rpm) / min$^{-1}$** | 1530 |
| **Power consumption / W** | 4680 |
| **Current draw / A** | 7.2 |
| **Min. ambient temperature / °C** | -25 |
| **Max. ambient temperature / °C** | 50 |

ml = Max. load · me = Max. efficiency · fa = Free air
cs = Customer specification · ce = Customer equipment

Subject to change

### 3.3 Data according to Commission Regulation (EU) 327/2011

| | Actual | Req. 2015 |
|---|---|---|
| **01 Overall efficiency $\eta_{es}$ / %** | 68.6 | 58.3 |
| **02 Measurement category** | A | |
| **03 Efficiency category** | Static | |
| **04 Efficiency grade N** | 72.3 | 62 |
| **05 Variable speed drive** | Yes | |
| **06 Year of manufacture** | The year of manufacture is specified on the product's rating label. | |
| **07 Manufacturer** | ebm-papst Mulfingen GmbH & Co. KGaA & Co. KG<br>Amtsgericht (court of registration) Stuttgart · HRA 590344<br>D-74673 Mulfingen | |
| **08 Type** | K3G630-PC08-01 | |
| **09 Power consumption $P_{ed}$ / kW** | 4.48 | |
| **09 Air flow $q_v$ / m³/h** | 14720 | |
| **09 Pressure increase total $p_{fs}$ / Pa** | 726 | |
| **10 Speed (rpm) n / min$^{-1}$** | 1535 | |
| **11 Specific ratio*** | 1.01 | |
| **12 Recycling/disposal** | Information on recycling and disposal is provided in the operating instructions. | |
| **13 Maintenance** | Information on installation, operation and maintenance is provided in the operating instructions. | |
| **14 Additional components** | Components used to calculate the energy efficiency that are not apparent from the measurement category are detailed in the CE declaration. | |

* Specific ratio = 1 + $p_{fs}$ / 100 000 Pa

Data obtained at optimum efficiency level. The efficiency values displayed for achieving conformity with the Ecodesign Regulation EU 327/2011 has been reached with defined air duct components (e.g. inlet rings). The dimensions must be requested from ebm-papst. If other air conduction geometries are used on the installation side, the ebm-papst evaluation loses its validity/the conformity must be confirmed again. The product does not fall within the scope of Regulation (EU) 2019/1781 due to the exception specified in Article 2 (2a) (motors completely integrated into a product).

### 3.4 Technical description

| | |
|---|---|
| **Weight** | 66 kg |
| **Size** | 630 mm |
| **Motor size** | 150 |
| **Rotor surface** | Painted black |
| **Electronics housing material** | Die-cast aluminum |
| **Impeller material** | Sheet aluminum |
| **Support plate material** | Sheet steel, galvanized |
| **Support bracket material** | Steel, painted black |
| **Inlet nozzle material** | Sheet steel, galvanized |
| **Number of blades** | 5 |
| **Direction of rotation** | Clockwise, viewed toward rotor |
| **Degree of protection** | IP55 |
| **Insulation class** | "F" |
| **Moisture (F) / Environmental (H) protection class** | H1 = Moist - occasional or constantly high level of humidity |
| **Installation position** | See legend on product drawing |
| **Condensation drainage holes** | On rotor side |
| **Mode** | S1 |
| **Motor bearing** | Ball bearing |
| **Technical features** | - Output 10 VDC, max. 10 mA<br>- Output 20 VDC, max. 50 mA<br>- Output for slave 0-10 V<br>- Input for sensor 0-10 V or 4-20 mA<br>- External 24 V input (parameter setting)<br>- External release input<br>- Alarm relay<br>- Integrated PID controller<br>- Motor current limitation<br>- PFC, passive<br>- RS-485 MODBUS-RTU<br>- Soft start<br>- EEPROM write cycles: 100,000 maximum<br>- Control input 0-10 VDC / PWM<br>- Control interface with SELV potential safely disconnected from the mains<br>- Thermal overload protection for electronics/motor<br>- Line undervoltage / phase failure detection |
| **Power Factor Correction (PFC)** | Passive |
| **Touch current according to IEC 60990 (measuring circuit Fig. 4, TN system)** | <= 3.5 mA |
| **Electrical hookup** | Terminal box |
| **Motor protection** | Reverse polarity and locked-rotor protection |
| **Protection class assignment** | I; If a protective earth is connected.<br>The built-in component has several local protection class assignments.<br>The final protection class is determined by the intended installation. |

Translation of the original operating instructions

| | |
|---|---|
| **Conformity with standards** | EN 61800-5-1; CE |
| **Approval** | UL 1004-7 + 60730-1; EAC; CSA C22.2 No. 77 + CAN/CSA-E60730-1 |

With regard to cyclic speed loads, note that the rotating parts of the device are designed for a maximum of one million load cycles. If you have special questions, consult ebm-papst for support.

⇒ Use the device in accordance with its degree of protection.

**Information on surface quality**

The surfaces of the products conform to the generally applicable industrial standard. The surface quality may change during the production period. This has no effect on strength, dimensional stability and dimensional accuracy.
The color pigments in the paints used perceptibly react to UV light over the course of time. The product is to be protected against UV radiation to prevent the formation of patches and fading. Changes in color are not a reason for complaint and are not covered by the warranty. UV radiation in the frequency range and the intensity of natural solar radiation has no effect on the technical properties of the products.

### 3.5 Mounting data

Further mounting data can be taken from the product drawing or Chapter 4.1 Mechanical connection as required.

| | |
|---|---|
| **Strength class of screws** | 8.8 |

⇒ Secure the screws against unintentional loosening (e.g. use self-locking screws).

### 3.6 Transport and storage conditions

| | |
|---|---|
| **Max. permitted ambient temp. for motor (transport/ storage)** | +80 °C |
| **Min. permitted ambient temp. for motor (transport/ storage)** | -40 °C |

### 3.7 Electromagnetic compatibility

| | |
|---|---|
| **EMC immunity to interference** | According to EN 61000-6-2 (industrial environment) |
| **EMC interference emission** | According to EN 61000-6-3 (household environment), except EN 61000-3-2 for professionally used equipment with a total rated power greater than 1 kW |

If several devices are switched in parallel on the supply side so that the line current of the arrangement is in the range of 16-75 A, then this arrangement conforms to IEC 61000-3-12 provided that the short-circuit power $S_{sc}$ at the connection point of the customer system to the public power system is greater than or equal to 120 times the rated output of the arrangement. It is the responsibility of the installation engineer or operator/ owner of the device to ensure, if necessary after consultation with the network operator, that this device is only connected to a connection point with a $S_{sc}$ value that is greater than or equal to 120 times the rated output of the arrangement.

## 4. CONNECTION AND STARTUP

### 4.1 Mechanical connection

**CAUTION**
**Risk of cutting and crushing when removing device from packaging**

→ Carefully remove the device from the packaging by grasping hold of the frame. Never subject to any impact.

→ Wear safety shoes and cut-resistant safety gloves.

**CAUTION**
**Device weighs over 25 kg! Heavy load when unpacking device.**
Risk of physical injury, such as back injuries.

→ Use suitable hoisting equipment to remove the device from its packaging.

**NOTE**
**Damage to the device from vibration**
Bearing damage, shorter service life

→ The fan must not be subjected to force or excessive vibration from sections of the installation.

→ If the fan is connected to air ducts, the connection should be isolated from vibration, e.g. using compensators or similar elements.

→ Ensure stress-free attachment of the fan to the substructure.

⇒ The fan may not be handled in the area around the inlet nozzle during transport and installation.
There is a risk of damage to the impeller.

⇒ Check the device for transport damage. Damaged devices are not to be installed.

⇒ Install the undamaged device in accordance with your application.

#### 4.1.1 Installation of RadiPac fan

Use is always to be made of appropriate hoisting equipment and a suitable lifting device when transporting the fan for installation purposes. Only suitable round slings are to be used for this purpose (see Chapter 3.4 Technical description for weight of product). Use four round slings passed around the struts for lashing purposes. Position the round slings as shown in the hoisting diagram below. Make sure that the struts of the support bracket on the left and right of the motor are vertical. During installation, only transport the fan in the installation position as shown in the product drawing. Heed the information given on the device! During transportation, an acceleration of 2 g must not be exceeded.

Translation of the original operating instructions



ebm-papst Mulfingen GmbH & Co. KGaA & Co. KG · Bachmühle 2 · 74673 Mulfingen · Phone +49 (0) 7938 81-0 · info1@de.ebmpapst.com · www.ebmpapst.com

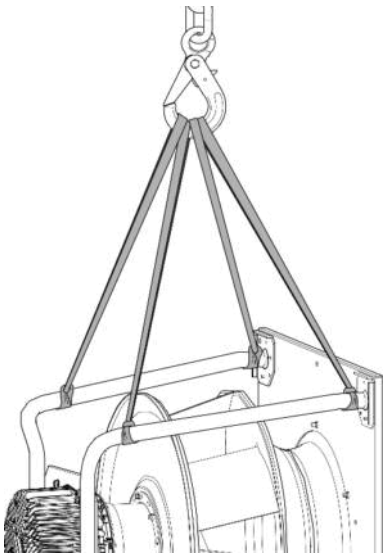

*Fig. 1: Hoisting diagram for transportation of RadiPac*

**CAUTION**
**Possible damage to the device**
If the device slips during installation, serious damage can result.

→ Ensure that the device is securely positioned at its place of installation until all fastening screws have been tightened.

- The fan must not be strained on fastening.

## 4.2 Electrical connection

**DANGER**
**Voltage on the device**
Electric shock

→ Always connect a protective earth first.

→ Check the protective earth.

**DANGER**
**Faulty insulation**
Risk of fatal injury from electric shock

→ Use only cables that meet the specified installation regulations for voltage, current, insulation material, capacity, etc.

→ Route cables so that they cannot be touched by any rotating parts.

**DANGER**
**Electrical charge (>50 µC) between phase conductor and protective earth connection after switching off supply with multiple devices connected in parallel.**
Electric shock, risk of injury

→ Ensure sufficient protection against accidental contact. Before working on the electrical hookup, short the supply and PE connections.

**CAUTION**
**Voltage**
The fan is a built-in component and has no disconnecting switch.

→ Only connect the fan to circuits that can be switched off with an all-pole disconnection switch.

→ When working on the fan, secure the system/machine in which the fan is installed so as to prevent it from being switched back on.

**NOTE**
**Device malfunctions possible**
Route the device's control lines separately from the supply line.

→ Maintain the greatest possible clearance.
Recommendation: clearance > 10 cm (separate cable routing)

**NOTE**
**Water ingress into wires or cables**
Water ingress at the customer end of the cable can damage the device.

→ Make sure the end of the cable is connected in a dry environment.

Only connect the device to circuits that can be switched off with an all-pole disconnection switch.

### 4.2.1 Requirements

⇒ Check whether the information on the nameplate matches the connection data.

⇒ Before connecting the device, make sure the power supply matches the device voltage.

⇒ Only use cables designed for the current level indicated on the nameplate.
For determining the cross-section, note the sizing criteria according to EN 61800-5-1. The protective earth must have a cross-section equal to or greater than that of the phase conductor.
We recommend the use of 105 °C cables. Ensure that the minimum cable cross-section is at least
AWG 26 / 0.13 mm².

**NOTE**
Using a harmonic filter can result in harmful electromagnetic resonance effects.

→ If filters like these are to be used, please utilize support from ebm-papst.

**Protective earth contact resistance according to EN 61800-5-1**

Compliance with the resistance specifications according to EN 61800-5-1 for the protective earth connection circuit must be verified in the end application. Depending on the installation situation, it may be necessary to connect an additional protective earth conductor by way of the extra protective earth terminal provided on the device. The protective earth terminal is located on the housing and provided with a protective earth symbol and a hole.

### 4.2.2 Supply connection and fuses

Assignment of supply cable cross-sections and their required fuses (line protection only, no equipment protection).

| Nominal voltage | Fuse | | Automatic circuit breaker | Cable cross-section | Cable cross-section |
|---|---|---|---|---|---|
| | VDE | UL | VDE | mm² | *AWG |
| 3/PE AC 380-480 VAC | 16 A | 15 A | C16A | 1.5 | 16 |
| 3/PE AC 380-480 VAC | 20 A | 20 A | C20A | 2.5 | 14 |

Translation of the original operating instructions



ebm-papst Mulfingen GmbH & Co. KGaA & Co. KG · Bachmühle 2 · 74673 Mulfingen · Phone +49 (0) 7938 81-0 · info1@de.ebmpapst.com · www.ebmpapst.com

| | | | | | |
|---|---|---|---|---|---|
| 3/PE AC 380-480 VAC | 25 A | 25 A | C25A | 4.0 | 12 |
| 3/PE AC 380-480 VAC | 32 A | 30 A | C32A | 6.0 | 10 |

* AWG = American Wire Gauge

#### 4.2.3 Reactive currents

Because of the EMC filter integrated for compliance with EMC limits (interference emission and immunity to interference), reactive currents can be measured in the supply line even when the motor is at a standstill and the line voltage is switched on.

- The values are typically in the range < 500 mA.
- At the same time, the effective power in this operating state (operational readiness) is typically < 6 W.

#### 4.2.4 Residual current circuit breaker (RCCB)

If the use of a residual current device (RCD) is required in your installation, only AC/DC-sensitive residual current devices (type B or B+) are permissible. As with variable frequency drives, residual current devices cannot provide personal safety while operating the device. When the device power supply is switched on, pulsed charging currents from the capacitors in the integrated EMC filter can lead to the instant tripping of residual current devices. We recommend the use of residual current circuit breakers (RCCB) with a trip threshold of 300 mA and delayed tripping (super-resistant, characteristic K).

#### 4.2.5 Locked-rotor protection

Due to the locked-rotor protection, the starting current (LRA) is equal to or less than the nominal current (FLA).

#### 4.2.6 Leakage current

For asymmetrical power systems or if a phase fails, the leakage current can increase to a multiple of the nominal value.

### 4.3 Connection in terminal box

#### 4.3.1 Preparing cables for connection

Only strip the cable as far as necessary, ensuring that the cable gland is sealed and there is no strain on the connections. For tightening torques, see Chapter 3.1 Product drawing.

**NOTE**
**Tightness and strain relief are dependent on the cable used.**

→ This must be checked by the user.

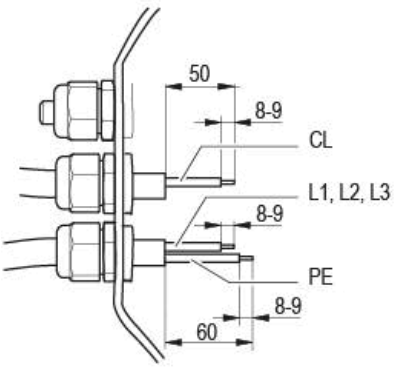


*Fig. 2: Recommended stripped lengths in mm (inside terminal box)*
*Legend: CL = control lines*

#### 4.3.2 Connecting wires to terminals

**WARNING**
**Live terminals and connections even with device switched off**
Electric shock

→ Wait five minutes after disconnecting the voltage at all poles before opening the device.

⇒ Open the terminal box cover

⇒ Remove the cap from the cable gland.

Only remove caps where cables are fed in.

⇒ Equip the cable glands with the seals provided in the terminal box.

⇒ Route the wire(s) (not included in scope of delivery) into the terminal box.

⇒ First connect the "PE" (protective earth).

⇒ Connect the wires to the corresponding terminals.

Use a screwdriver to do so.
When connecting, ensure that no wire ends fan out.

Translation of the original operating instructions



ebm-papst Mulfingen GmbH & Co. KGaA & Co. KG · Bachmühle 2 · 74673 Mulfingen · Phone +49 (0) 7938 81-0 · info1@de.ebmpapst.com · www.ebmpapst.com

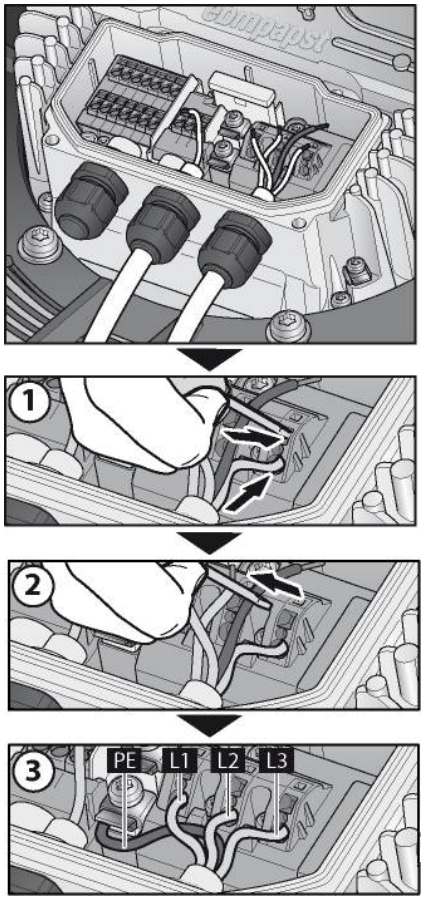


*Fig. 3: Connecting wires to terminals*

⇒ Seal the terminal box.

#### 4.3.3 Cable routing

Water must be prevented from reaching the cable gland along the cable.

**NOTE**
**Damage caused by moisture penetration.**
Moisture can penetrate into the terminal box if water is constantly present at the cable glands.

→ To prevent the constant accumulation of water at the cable glands, the cable should be routed in a U-shaped loop wherever possible.

→ If this is not possible, a drip edge can be produced by fitting a cable tie directly in front of the cable gland for example.

Translation of the original operating instructions



ebm-papst Mulfingen GmbH & Co. KGaA & Co. KG · Bachmühle 2 · 74673 Mulfingen · Phone +49 (0) 7938 81-0 · info1@de.ebmpapst.com · www.ebmpapst.com

## 4.4 Connection diagram

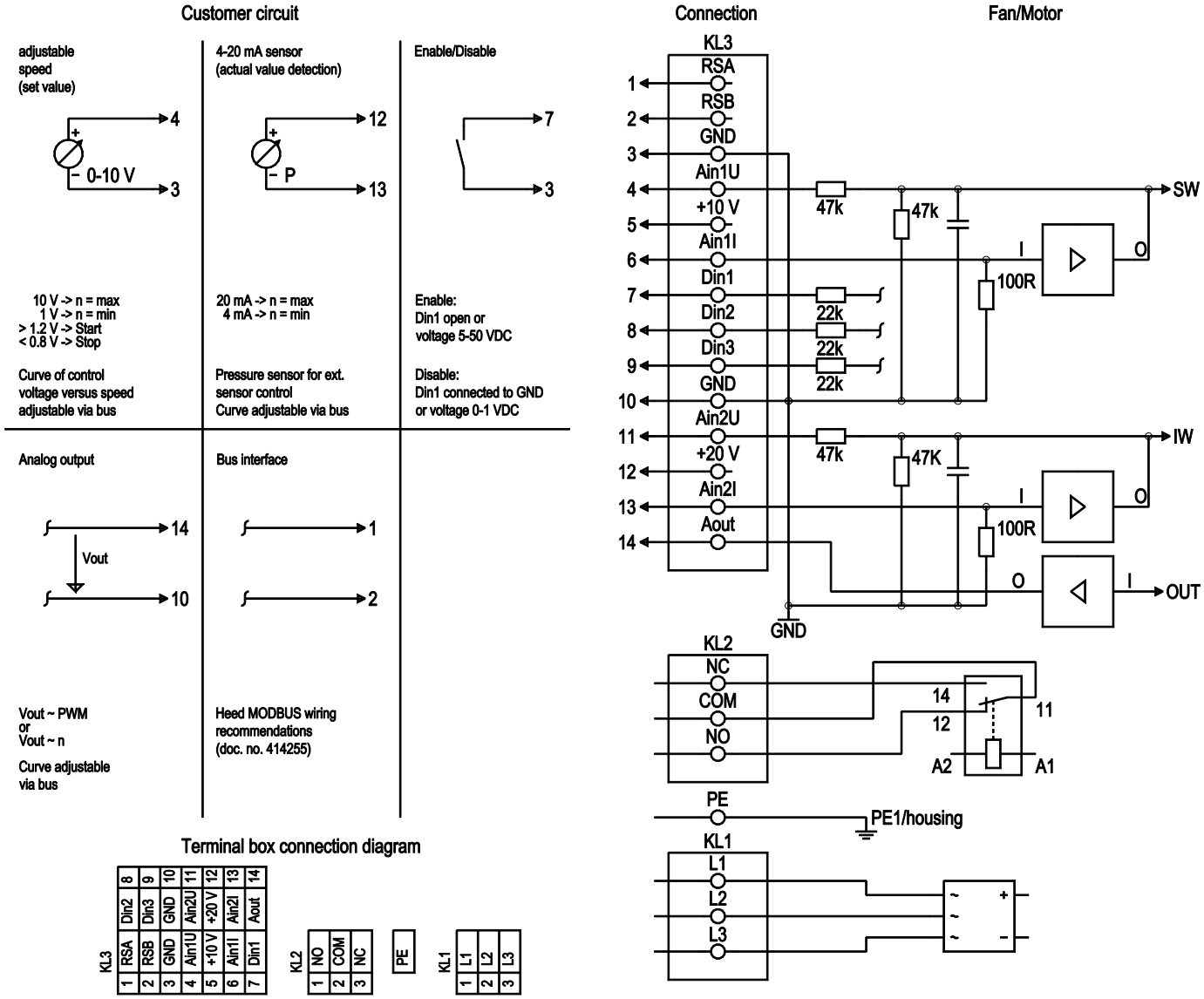


Drawing preliminary!

| No. | Conn. | Designation | Function/assignment |
|---|---|---|---|
| KL 1 | 1 | L1 | Supply connection, power supply, phase, see nameplate for voltage range |
| KL 1 | 2 | L2 | Supply connection, power supply, phase, see nameplate for voltage range |
| KL 1 | 3 | L3 | Supply connection, power supply, phase, see nameplate for voltage range |
| PE | | PE | Ground connection, PE connection |
| KL 2 | 1 | NO | Status relay, floating status contact, make for failure |
| KL 2 | 2 | COM | Status relay, floating status contact, changeover contact, common connection, contact rating, max. 250 VAC/2 A (AC1)/min. 10 mA |
| KL 2 | 3 | NC | Status relay, floating status contact, break for failure |
| KL 3 | 1 | RSA | Bus connection RS485, RSA, MODBUS RTU; SELV |
| KL 3 | 2 | RSB | Bus connection RS485, RSB, MODBUS RTU; SELV |
| KL 3 | 3 / 10 | GND | Reference ground for control interface, SELV |
| KL 3 | 4 | Ain1 U | Analog input 1, set value: 0-10 V, Ri = 100 kΩ, adjustable curve, only usable as alternative to input Ain1 I; SELV |
| KL 3 | 5 | + 10 V | Fixed voltage output 10 VDC, +10 V ± 3%, max. 10 mA, short-circuit-proof, power supply for external devices (e.g. pot); SELV |

Translation of the original operating instructions



ebm-papst Mulfingen GmbH & Co. KGaA & Co. KG · Bachmühle 2 · 74673 Mulfingen · Phone +49 (0) 7938 81-0 · info1@de.ebmpapst.com · www.ebmpapst.com

| No. | Conn. | Designation | Function/assignment |
|---|---|---|---|
| **KL 3** | **6** | **Ain1 I** | Analog input 1, set value: 4-20 mA, Ri = 100 Ω, adjustable curve, only usable as alternative to input Ain1 U; SELV |
| **KL 3** | **7** | **Din1** | Digital input 1: enable electronics,<br>enable: pin open or applied voltage 5-50 VDC<br>disable: bridge to GND or applied voltage < 1 VDC<br>reset function: triggers software reset after a level change to < 1 VDC; SELV |
| **KL 3** | **8** | **Din2** | Digital input 2: Switching parameter sets 1/2, according to EEPROM setting, the valid or used parameter set can be selected via bus or via digital input DIN2.<br>Parameter set 1: pin open or applied voltage 5-50 VDC<br>Parameter set 2: bridge to GND or applied voltage < 1 VDC; SELV |
| **KL 3** | **9** | **Din3** | Digital input 3: Direction of action of integrated controller, according to EEPROM setting, the direction of action of the integrated controller can be selected as normal/inverse via bus or digital input<br>Normal: Pin open or applied voltage 5-50 VDC<br>Inverse: Bridge to GND or applied voltage < 1 VDC; SELV |
| **KL 3** | **11** | **Ain2 U** | Analog input 2, measured value: 0-10 V, Ri = 100 kΩ, adjustable curve, only usable as alternative to input Ain2 I; SELV |
| **KL 3** | **12** | **+ 20 V** | Fixed voltage output 20 VDC, +20 V +25/-10%, max. 50 mA, short-circuit-proof, power supply for external devices (e.g. sensors); SELV<br>Alternatively: +24 VDC input for parameterization without line voltage |
| **KL 3** | **13** | **Ain2 I** | Analog input 2, measured value: 4-20 mA, Ri = 100 Ω, adjustable curve, only usable as alternative to input Ain2 U; SELV |
| **KL 3** | **14** | **Aout** | Analog output 0-10 V, max. 5 mA, output of current motor modulation level; adjustable curve; SELV |

Translation of the original operating instructions

### 4.5 Checking connections

- ⇒ Ensure isolation from supply (all phases).
- ⇒ Make sure a restart is impossible
- ⇒ Check the cables for proper fit.
- ⇒ Screw the terminal box cover back on again. Terminal box tightening torque, see Chapter 3.1 Product drawing.
- ⇒ Route the cables in the terminal box so that the terminal box cover closes without resistance.
- ⇒ Use all screw plugs. Insert the screws by hand to avoid damage to the threads.
- ⇒ Make sure the terminal box is completely closed and sealed and that all screws and cable glands have been properly tightened.

### 4.6 Switching on the device

The device may only be switched on if it has been installed properly and in accordance with its intended use, including the required safety mechanisms and professional electrical hookup. This also applies for devices which have already been equipped with plugs and terminals or similar connectors by the customer.

**WARNING**
**Hot motor housing**
Risk of fire

→ Ensure that no combustible or flammable materials are located close to the fan.

- ⇒ Before switching on, check the device for visible external damage and make sure the protective devices are functional.
- ⇒ Check the fan's air flow paths for foreign matter and remove any foreign matter found.
- ⇒ Apply the nominal supply voltage.
- ⇒ Start the device by changing the input signal.

**NOTE**
**Damage to the device from vibration**
Bearing damage, shorter service life

→ Low-vibration operation of the fan must be ensured over the entire speed control range.

→ Severe vibration can arise for instance from inexpert handling, transportation damage and resultant imbalance or be caused by component or structural resonance.

→ Speed ranges with excessively high vibration levels and possibly resonant frequencies must be determined in the course of fan commissioning.

→ Either run through the resonant range as quickly as possible with speed control or find another remedy.

→ Operation with excessively high vibration levels can lead to premature failure.

→ After installation and after commissioning, qualified personnel must regularly check the fan unit for mechanical vibrations.# Please refer to ISO 14694 for the limit values applicable for the fan category.

→ If the limit values are exceeded, the fan unit must be checked as a whole and possibly re-balanced.

→ For information on the measurement, see Chapter 6.1 Vibration testing

### 4.7 Switching off the device

Switching off the device during operation:

- ⇒ Switch off the device via the control input.
- ⇒ Do not switch the motor (e.g. in cyclic operation) on and off via power supply.

Switching off the device for maintenance:

- ⇒ Switch off the device via the control input.
- ⇒ Do not switch the motor (e.g. in cyclic operation) on and off via power supply.
- ⇒ Disconnect the device from the power supply.
- ⇒ When disconnecting, be sure to disconnect the ground connection last.

## 5. INTEGRATED PROTECTIVE FEATURES

The integrated protective functions cause the motor to switch off automatically in the event of the faults described in the table.

| Fault | Safety feature description/ function |
|---|---|
| Rotor position detection error | An automatic restart follows. |
| Blocked rotor | ⇒ After the blockage is removed, the motor restarts automatically. |
| Line undervoltage (line voltage outside of permitted nominal voltage range) | ⇒ If the line voltage returns to permitted values, the motor restarts automatically. |
| Phase failure | A phase of the supply voltage fails for at least 5 s.<br>⇒ When all phases are correctly supplied again, the motor automatically restarts after 10-40 s. |

Translation of the original operating instructions



ebm-papst Mulfingen GmbH & Co. KGaA & Co. KG · Bachmühle 2 · 74673 Mulfingen · Phone +49 (0) 7938 81-0 · info1@de.ebmpapst.com · www.ebmpapst.com

## 6. MAINTENANCE, MALFUNCTIONS, POSSIBLE CAUSES AND REMEDIES

Do not perform any repairs on your device. Send the device to ebm-papst for repair or replacement.

**WARNING**
**Live terminals and connections even with device switched off**
Electric shock

→ Wait five minutes after disconnecting the voltage at all poles before opening the device.

**CAUTION**
**If control voltage or a stored speed set value is applied, the motor will restart automatically, e.g. after a power failure.**
Risk of injury

→ Keep out of the device's danger zone.

→ When working on the device, switch off the line voltage and ensure that it cannot be switched back on.

→ Wait until the device comes to a stop.

→ After working on the device, remove any tools or other objects from the device.

**NOTE**
If the device is not operated for a lengthy period in installed condition in a dry environment, it is to be started up and operated at full speed for one hour at least every four months. If the device is not operated for a lengthy period in installed condition in a damp environment (e.g. outdoors), it is to be started up and operated at full speed for at least three hours once a month to move the bearings and allow any condensate that may have ingressed to evaporate.

| Malfunction/fault | Possible cause | Possible remedy |
|---|---|---|
| **Impeller not running smoothly** | Imbalance in rotating parts | Clean the device; replace it if imbalance persists after cleaning. Make sure no weight clips are removed during cleaning. |
| **Motor not turning** | Mechanical blockage | Switch off, isolate from supply and remove mechanical blockage. |
| | Line voltage faulty | Check line voltage, restore power supply. Attention! The error message resets automatically. Device restarts automatically without warning. |
| | Faulty connection | Isolate from supply, correct connection; see connection diagram. |
| | Broken motor winding | Replace device |
| | Deficient cooling | Improve cooling. Let the device cool down. To reset the error message, switch off the line voltage for at least 25 s and then switch it on again. Alternatively, reset the error message by applying a control signal of < 0.5 V to Din1 or by shorting Din1 to GND. |
| | Ambient temperature too high | Reduce the ambient temperature. Let the device cool down. To reset the error message, switch off the line voltage for at least 25 s and then switch it on again. Alternatively, reset the error message by applying a control signal of < 0.5 V to Din1 or by shorting Din1 to GND. |
| | Impermissible point of operation (e.g. back pressure too high) | Correct the operating point. Let the device cool down. To reset the error message, switch off the line voltage for at least 25 s and then switch it on again. Alternatively, reset the error message by applying a control signal of < 0.5 V to Din1 or by shorting Din1 to GND. |

In the event of further malfunctions, contact ebm-papst.

### 6.1 Vibration testing

Checking of fan for mechanical vibration based on ISO 14694. Recommendation: Every 6 months. Please refer to ISO 14694 for the limit values applicable for the fan category. If the limit values are exceeded, the fan unit as a whole must be checked and suitable measures may have to be taken to reduce the vibrations that occur. The vibration severity is measured at the motor fastening diameter on the motor support plate in the direction of the motor axis of rotation and perpendicular to it.

Translation of the original operating instructions



ebm-papst Mulfingen GmbH & Co. KGaA & Co. KG · Bachmühle 2 · 74673 Mulfingen · Phone +49 (0) 7938 81-0 · info1@de.ebmpapst.com · www.ebmpapst.com

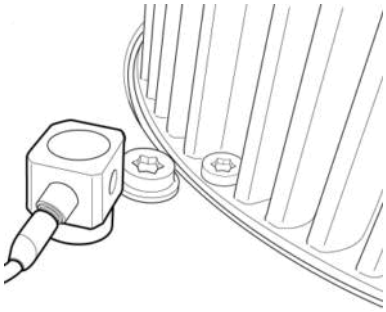

*Fig. 4: ebm-papst recommends the use of a vibration sensor that takes measurements in all three directions from one measuring point (triaxial sensor).*

## 6.2 Cleaning

To ensure a long service life, check the fans regularly for proper operation and soiling. The frequency of checking is to be adapted accordingly depending on the degree of soiling.

**DANGER**
**Risk of injury from rotating fan.**

→ Only clean when not in motion. Do not disconnect the fan from the power supply, just switch it off via the control input. This will prevent start-up of the fan.

⇒ Dirt deposits on the motor housing can cause overheating of the motor.

⇒ Soiling of the impeller can cause vibration that will shorten the service life of the fan.

⇒ Severe vibration can destroy the fan.

⇒ In such cases, switch off the fan immediately and clean it.

⇒ The preferred method of cleaning is dry cleaning, e.g. using compressed air.

⇒ Do not use aggressive cleaning agents!

**NOTE**
**Damage to the device during cleaning**
Malfunction possible

→ Do not clean the device using a high-pressure cleaner.# Do not use acid, alkali or solvent-based cleaning agents.

→ Do not use any pointed or sharp-edged objects for cleaning.

⇒ Completely remove any cleaning agents used.

⇒ If severe corrosion is visible on load-bearing or rotating parts, switch off the device immediately and replace it.

⇒ Repair of load-bearing or rotating parts is not permitted!

⇒ Operate the fan for 2 hours at maximum speed so that any water that has ingressed can evaporate.

⇒ If cleaning does not eliminate vibrations, the fan may need to be rebalanced. To have it rebalanced, contact ebm-papst.

⇒ The fan is equipped with maintenance-free ball bearings. The lifetime lubrication of the ball bearings is designed for a service life of 40,000 hours.

⇒ Adapt the maintenance intervals to the actual level of dust exposure.

## 6.3 Safety inspection

**NOTE**
**High-voltage test**
The integrated EMC filter has Y capacitors. The tripping current is exceeded when AC testing voltage is applied.

→ Test the device with DC voltage when you perform the legally required high-voltage test. The voltage to be used corresponds to the peak value of the AC voltage required by the standard.

| What to check | How to check | How often | What action? |
|---|---|---|---|
| Contact protection cover for intactness or damage | Visual inspection | At least every 6 months | Repair or replacement of device |
| Device for damage to blades and housing | Visual inspection | At least every 6 months | Replacement of device |
| Fastening the cables | Visual inspection | At least every 6 months | Fasten |
| Insulation of cables for damage | Visual inspection | At least every 6 months | Replace cables |
| Impeller for wear/deposits/ corrosion and damage | Visual inspection | At least every 6 months | Clean impeller or replace device |
| Tightness of cable gland | Visual inspection | At least every 6 months | Retighten, replace if damaged |
| Condensation drainage holes for clogging, where necessary | Visual inspection | At least every 6 months | Open holes |
| Abnormal bearing noise | acoustic | At least every 6 months | Replace device |
| Vibration test | Vibration tester, start-up or deceleration measurement | Recommended every 6 months | Clean impeller or replace device |

## 6.4 Disposal

For ebm-papst, environmental protection and resource preservation are top priority corporate goals.
ebm-papst operates an environmental management system which is certified in accordance with ISO 14001 and rigorously implemented around the world on the basis of German standards.
Right from the development stage, ecological design, technical safety and health protection are fixed criteria.
The following section contains recommendations for ecological disposal of the product and its components.

Translation of the original operating instructions



ebm-papst Mulfingen GmbH & Co. KGaA & Co. KG · Bachmühle 2 · 74673 Mulfingen · Phone +49 (0) 7938 81-0 · info1@de.ebmpapst.com · www.ebmpapst.com

### 6.4.1 Country-specific legal requirements

**NOTE**
**Country-specific legal requirements**
Always observe the applicable country-specific legal regulations with regard to the disposal of products or waste occurring in the various phases of the life cycle. The corresponding disposal standards are also to be heeded.

### 6.4.2 Disassembly

Disassembly of the product must be performed or supervised by qualified personnel with the appropriate technical knowledge.
The product is to be disassembled into suitable components for disposal employing standard procedures for motors.

**WARNING**
**Heavy parts of the product may drop off. Some of the product components are heavy. These components could drop off during disassembly.**
This can result in fatal or serious injury and material damage.
→ Secure components before unfastening to stop them falling.

### 6.4.3 Component disposal

The products are mostly made of steel, copper, aluminum and plastic. Metallic materials are generally considered to be fully recyclable. Separate the components for recycling into the following categories:

- Steel and iron
- Aluminum
- Non-ferrous metal, e.g. motor windings
- Plastics, particularly with brominated flame retardants, in accordance with marking
- Insulating materials
- Cables and wires
- Electronic scrap, e.g. circuit boards

Only ferrite magnets and not rare earth magnets are used in external rotor motors from ebm-papst Mulfingen GmbH & Co. KG.

⇒ Ferrite magnets can be disposed of in the same way as normal iron and steel.

Electrical insulating materials on the product, in cables and wires are made of similar materials and are therefore to be treated in the same manner.
The materials concerned are as follows:

- Miscellaneous insulators used in the terminal box
- Power cables
- Cables for internal wiring
- Electrolytic capacitors

Dispose of electronic components employing the proper procedures for electronic scrap.

→ Please contact ebm-papst for any other questions on disposal.

Translation of the original operating instructions



ebm-papst Mulfingen GmbH & Co. KGaA & Co. KG · Bachmühle 2 · 74673 Mulfingen · Phone +49 (0) 7938 81-0 · info1@de.ebmpapst.com · www.ebmpapst.com