Leuze electronic

the sensor people

SMART
SENSOR
BUSINESS

CSL 710

Switching light curtain

EN 2016/0750128684
We reserve the right to
make technical changes

Original operating instructions

ПРОМЭЛЕКТРОНИКА / sales@prom-elec.com

Leuze electronic GmbH + Co. KG
In der Braike 1
D-73277 Owen / Germany
Phone: +49 7021 573-0
Fax: +49 7021 573-199
http://www.leuze.com
info@leuze.de

1 About this document . . . 6
1.1 Used symbols and signal words . . . 6
1.2 Terms and abbreviations . . . 6

2 Safety . . . 8
2.1 Intended use . . . 8
2.2 Foreseeable misuse . . . 8
2.3 Competent persons . . . 8
2.4 Exemption of liability . . . 9

3 Device description . . . 10
3.1 General information . . . 10
3.2 General performance characteristics . . . 10
3.3 Connection technology . . . 11
3.4 Display elements . . . 11
3.4.1 Operation indicators on the receiver control panel . . . 11
3.4.2 Display on the receiver control panel . . . 12
3.4.3 Operating indicators on the transmitter . . . 13
3.5 Operating elements on the receiver control panel . . . 13
3.6 Menu structure of the receiver control panel . . . 13
3.7 Menu navigation on the receiver control panel . . . 15
3.7.1 Meaning of the display icons . . . 15
3.7.2 Level display . . . 15
3.7.3 Menu navigation . . . 16
3.7.4 Editing value parameters . . . 16
3.7.5 Editing selection parameters . . . 17

4 Functions . . . 19
4.1 Beam modes . . . 19
4.1.1 Parallel . . . 19
4.1.2 Diagonal . . . 19
4.1.3 Crossed-beam . . . 20
4.2 Blanking . . . 21
4.3 Power-Up Teach . . . 23
4.4 Smoothing . . . 23
4.5 External triggering . . . 24
4.6 Block evaluation of beam areas . . . 25
4.6.1 Defining beam area . . . 25
4.6.2 Autosplitting . . . 25
4.6.3 Mapping beam area to switching output . . . 25
4.6.4 Teach height area . . . 27
4.7 Switching outputs . . . 29
4.7.1 Light/dark switching . . . 29
4.7.2 Time functions . . . 29
4.8 Interference suppression (filter depth) . . . 29

5 Applications . . . 31
5.1 Object counting . . . 31
5.2 Height monitoring and sorting of packets . . . 32
5.3 Hole recognition . . . 33

6 Mounting and installation . . . 34
6.1 Mounting the light curtain . . . 34

ПРОМЭЛЕКТРОНИКА / sales@prom-elec.com

6.2 Definition of directions of movement . . . 35
6.3 Fastening via sliding blocks . . . 36
6.4 Fastening via swivel mount . . . 36
6.5 Fastening via swiveling mounting brackets . . . 37

7 Electrical connection . . . 38
7.1 Shielding and line lengths . . . 38
7.1.1 Shielding . . . 38
7.1.2 Cable lengths for shielded cables . . . 40
7.2 Connection and interconnection cables . . . 40
7.3 Device connections . . . 41
7.4 Digital inputs/outputs on connection X1 . . . 41
7.5 Electrical connection – CSL 710 . . . 41
7.5.1 X1 pin assignment – CSL 710 . . . 42
7.5.2 X2/X3 pin assignment – CSL 710 . . . 43
7.6 Electrical supply . . . 43

8 Starting up the device - Basic configuration . . . 44
8.1 Aligning transmitter and receiver . . . 44
8.2 Teaching the environmental conditions . . . 46
8.2.1 Teach via receiver control panel . . . 47
8.2.2 Teaching via a control signal from the control . . . 48
8.3 Check alignment . . . 49
8.4 Setting the function reserve . . . 49
8.5 Extended configurations on the receiver control panel menu . . . 50
8.5.1 Define digital inputs/outputs . . . 50
8.5.2 Inversion of the switching behavior (light/dark switching) . . . 52
8.5.3 Defining the filter depth . . . 52
8.5.4 Defining the display properties . . . 53
8.5.5 Changing the language . . . 53
8.5.6 Product information . . . 54
8.5.7 Reset to factory settings . . . 54

9 Starting up the CSL 710 with IO-Link interface . . . 55
9.1 Defining IO-Link configurations on the receiver control panel . . . 55
9.2 Defining configurations via the IO-Link master module of the PLC-specific software . . . 56
9.3 Parameter/process data for IO-Link . . . 56

10 Example configurations . . . 65
10.1 Example configuration - Mapping of beams 1 … 32 to output pin 2 . . . 65
10.1.1 Configuration of area/output mapping (general) . . . 65
10.2 Example configuration – Teach height area . . . 66
10.3 Example configuration - Activating and deactivating blanking areas . . . 67
10.3.1 Configuration of blanking areas (general) . . . 67
10.4 Example configuration – smoothing . . . 67
10.4.1 Smoothing configuration (general) . . . 67

11 Connecting to a PC – *Sensor Studio* . . . 68
11.1 System requirements . . . 68
11.2 Installing *Sensor Studio* configuration software and IO-Link USB master . . . 69
11.2.1 Installing the *Sensor Studio* FDT frame . . . 69
11.2.2 Installing drivers for IO-Link USB master . . . 69
11.2.3 Connecting IO-Link USB master to the PC . . . 70
11.2.4 Connect the IO-Link USB master to the light curtain . . . 70

11.2.5 Installing the DTM and IODD . . . 71
11.3 Starting the *Sensor Studio* configuration software . . . 71
11.4 Short description of the *Sensor Studio* configuration software . . . 73
11.4.1 FDT frame menu . . . 73
11.4.2 *IDENTIFICATION* function . . . 73
11.4.3 *CONFIGURATION* function . . . 73
11.4.4 *PROCESS* function . . . 74
11.4.5 *DIAGNOSIS* function . . . 75
11.4.6 *Exiting Sensor Studio* . . . 75

12 Troubleshooting . . . 76
12.1 What to do in case of failure? . . . 76
12.2 Operating indicators of the LEDs . . . 76
12.3 Error codes in the display . . . 77

13 Care, maintenance and disposal . . . 80
13.1 Cleaning . . . 80
13.2 Servicing . . . 80
13.2.1 Firmware update . . . 80
13.3 Disposing . . . 80

14 Service and support . . . 81

15 Technical data . . . 82
15.1 General specifications . . . 82
15.2 Timing . . . 85
15.3 Minimum object diameter for stationary objects . . . 87
15.4 Dimensioned drawings . . . 88
15.5 Dimensioned drawings: Accessories . . . 89

16 Ordering information and accessories . . . 92
16.1 Nomenclature . . . 92
16.2 Accessories – CSL 710 . . . 93
16.2.1 Connection to the switch cabinet (screw terminals) . . . 93
16.2.2 Connection to IO-Link master . . . 95
16.3 Accessories – fastening technology . . . 96
16.4 Accessories – PC connection . . . 97
16.5 Accessories - Device columns . . . 97
16.6 Scope of delivery . . . 97

17 EC Declaration of Conformity . . . 98

1 About this document

These original operating instructions contain information regarding the proper use of the CSL 710 switching light curtain series. They are included in the delivery contents.

1.1 Used symbols and signal words

Table 1.1: Warning symbols, signal words and symbols

⚠	Pay attention to passages marked with this symbol. Failure to observe the provided instructions could lead to personal injury or damage to equipment.
NOTE	Signal word for property damage Indicates dangers that may result in property damage if the measures for danger avoidance are not followed.
ℹ	Symbol for tips Text passages with this symbol provide you with further information.
↳	Symbols for action steps Text passages with this symbol instruct you to perform actions.

Table 1.2: Operating on the display

↓	**Main Settings**	Bold text Indicates that this field is currently selected and appears highlighted in the receiver display.
→	Digital IOs	Normal text Indicates that this field is not currently selected (is not highlighted in the receiver display).

1.2 Terms and abbreviations

Table 1.3: Terms and abbreviations

DTM (**D**evice **T**ype **M**anager)	Software device manager of the sensor
IO	Input Output
FB (**F**irst **B**eam)	First beam
FDT (**F**ield **D**evice **T**ool)	Software frame for management of device managers (DTM)
LB (**L**ast **B**eam)	Last beam
TIB (**T**otal **I**nterrupted **B**eams)	Total of interrupted beams
n	Number of all logical beams of a light curtain; dependent on the selected measurement field length and resolution as well as the beam mode (parallel- / diagonal- / crossed-beam scanning)
IODD	IO Device Description (IODD file for IO-Link interface) Description of the device for the control
GUI (**G**raphical **U**ser **I**nterface)	Graphical user interface
PLC	Programmable Logic Control (corresponds to Programmable Logic Controller (PLC))
Response time per beam	Length of time for the evaluation of a beam

Resolution	The minimum size of an object that can be reliably detected. With parallel-beam evaluation, the smallest object to be detected corresponds to the sum of beam spacing and optic diameter.
Delay before start-up	Duration between the switching on of the supply voltage and the start of operational readiness of the light curtain
Function reserve (sensitivity adjustment)	Ratio of the optical reception power set during the teach event and the minimum light quantity required to switch the individual beam. This compensates for the light attenuation caused by dirt, dust, smoke, humidity and vapor. High function reserve = low sensitivity Low function reserve = high sensitivity
Measurement field length	Optical detection range between the first and last beam
Beam spacing	Center-to-center spacing between two beams
Cycle time	Sum of the response times of all beams of a light curtain plus the duration of the internal evaluation. Cycle time = number of beams x response time per beam + evaluation time

2 Safety

This sensor was developed, manufactured and tested in line with the applicable safety standards. It corresponds to the state of the art.

2.1 Intended use

The device is designed as a switching and object-detecting, configurable, multi-sensor unit.

Areas of application

The switching light curtain is designed for the detection of objects for the following areas of application in handling and warehousing systems, the packaging industry or a comparable environment:

- Object detection
- Projection monitoring
- Height monitoring or packet sorting
- Area monitoring
- Hole recognition

⚠ CAUTION

Observe intended use!

↳ Only operate the device in accordance with its intended use.

The protection of personnel and the device cannot be guaranteed if the device is operated in a manner not complying with its intended use.

Leuze electronic GmbH + Co. KG is not liable for damages caused by improper use.

↳ Read the original operating instructions before commissioning the device.

Knowledge of the original operating instructions is an element of proper use.

NOTICE

Comply with conditions and regulations!

↳ Observe the locally applicable legal regulations and the rules of the employer's liability insurance association.

2.2 Foreseeable misuse

Any use other than that defined under “Intended use” or which goes beyond that use is considered improper use.

In particular, use of the device is not permitted in the following cases:

- Rooms with explosive atmospheres
- Circuits relevant to safety
- Operation for medical purposes

NOTICE

Do not modify or otherwise interfere with the device!

↳ Do not carry out modifications or otherwise interfere with the device.

The device must not be tampered with and must not be changed in any way.

The device must not be opened. There are no user-serviceable parts inside.

Repairs must only be performed by Leuze electronic GmbH + Co. KG.

2.3 Competent persons

Connection, mounting, commissioning and adjustment of the device must only be carried out by competent persons.

Prerequisites for competent persons:

- They have a suitable technical education.
- They are familiar with the rules and regulations for occupational safety and safety at work.
- They are familiar with the original operating instructions of the device.
- They have been instructed by the responsible person on the mounting and operation of the device.

Certified electricians

Electrical work must be carried out by a certified electrician.

Due to their technical training, knowledge and experience as well as their familiarity with relevant standards and regulations, certified electricians are able to perform work on electrical systems and independently detect possible dangers.

In Germany, certified electricians must fulfill the requirements of accident-prevention regulations BGV A3 (e.g. electrician foreman). In other countries, there are respective regulations that must be observed.

2.4 Exemption of liability

Leuze electronic GmbH + Co. KG is not liable in the following cases:

- The device is not being used properly.
- Reasonably foreseeable misuse is not taken into account.
- Mounting and electrical connection are not properly performed.
- Changes (e.g., constructional) are made to the device.

3 Device description

3.1 General information

The light curtains of the CSL 710 series are designed as switching and object-detecting, configurable, multi-sensor units. Depending on the configuration and model, the devices are suitable for a variety of tasks with various resolutions and can be integrated in different control environments.

The total system of the light curtain consists of a transmitter and a receiver, including the connection and interconnection cables.

- Transmitter and receiver are connected to one another via a synchronization cable.
- The integrated control panel with indicators and operational controls for configuring the total system is located on the receiver.
- The shared power supply is provided via connection X1 on the receiver.

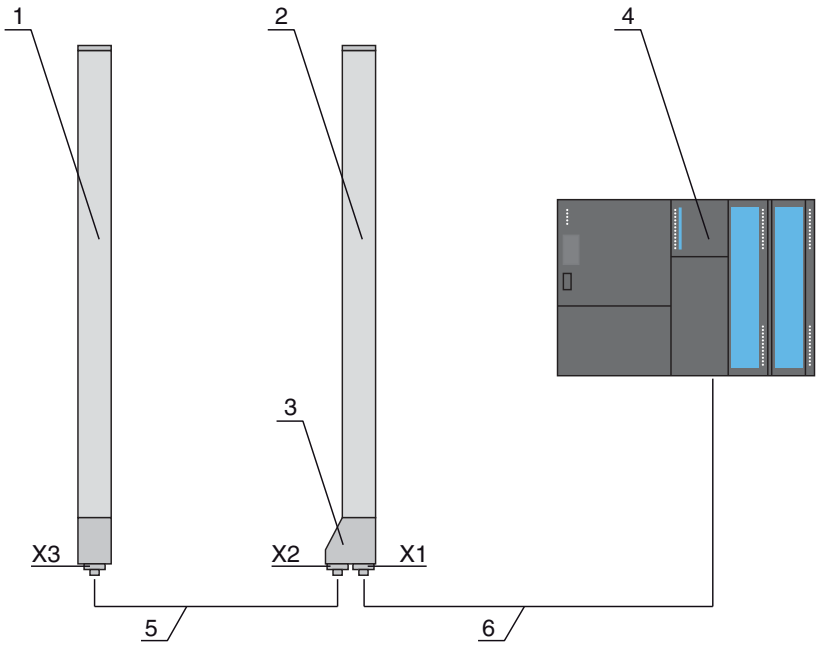

1 Transmitter
2 Receiver
3 IO Logic with control panel
4 Control (PLC)
5 Synchronization cable
6 Connection cable for supply voltage and communication interface

Figure 3.1: Total system in combination with a programmable logic control

3.2 General performance characteristics

The most important performance characteristics of the CSL 710 series are:

- Operating range up to 7000 mm
- Measurement field length from 150 mm to 2960 mm
- Beam spacings of 5 mm, 10 mm, 20 mm, 40 mm
- Response time 30 µs per beam
- Beam modes: parallel, diagonal, crossed-beam
- Status of beam areas 1 … 8
  Status of the digital inputs/outputs
- Local control panel with display
- Interfaces to the machine control:
  - IO-Link:

Up to four digital inputs/outputs (configurable)
- Blanking of unnecessary beams
- Smoothing for interference suppression
- Block evaluation of beam areas

3.3 Connection technology

The transmitter and receiver feature an M12 connector with the following number of pins:

Device type	Designation on device	Plug/socket
Receiver	X1	M12 plug, 8-pin
Receiver	X2	M12 socket, 5-pin
Transmitter	X3	M12 plug, 5-pin

3.4 Display elements

The display elements show the device status in operation and provide support during commissioning and error analysis.

Located on the receiver is a control panel with the following display elements:
- two LEDs
- one OLED display (Organic Light-Emitting Diode), two-line

Located on the transmitter is the following display element:
- one LED

3.4.1 Operation indicators on the receiver control panel

Two function indicator LEDs are located on the receiver control panel.

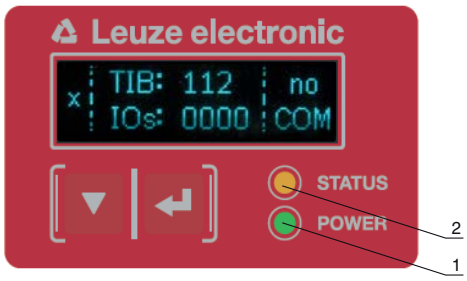

1 LED1, green
2 LED2, yellow

Figure 3.2: LED indicators on the receiver

Table 3.1: Meaning of the LEDs on the receiver

LED	Color	State	Description
1	Green	ON (continuous light)	Light curtain ready (normal mode)
		Flashing	see chapter 12.2
		OFF	Sensor not ready
2	Yellow	ON (continuous light)	All active beams free – with function reserve or configured as trigger slave without trigger pulses
		Flashing	see chapter 12.2
		OFF	At least one beam interrupted (object detected)

3.4.2 Display on the receiver control panel

Located on the receiver is an OLED display which serves as a function indicator.

Figure 3.3: OLED display on the receiver

The type of display on the OLED display is different for the following operating modes:

- Alignment mode
- Process mode

Display indicators in alignment mode

In alignment mode, the OLED display shows the received signal level of the first active logical beam (FB) and of the last active logical beam (LB) via two bar graph indicators.

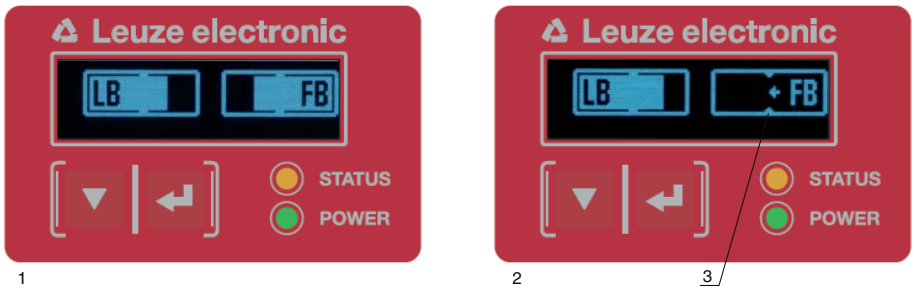

1 Evenly aligned light curtain
2 No reception signal from first beam (FB); good reception signal from last beam (LB)
3 Marker for the minimum signal level which is to be achieved

Figure 3.4: OLED display on the receiver in alignment mode

Display indicators in process mode

In process mode, the upper line shows the number of interrupted beams (TIB) and the lower line shows the logic state of the digital outputs. The value to be displayed is configurable.

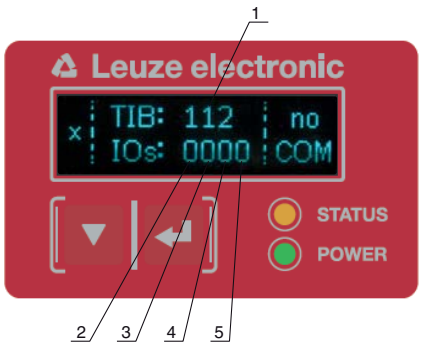

1 Total of interrupted beams
2 Logic state at pin 2 (0 = not active, 1 = active)
3 Logic state at pin 5 (0 = not active, 1 = active)
4 Logic state at pin 6 (0 = not active, 1 = active)
5 Logic state at pin 7 (0 = not active, 1 = active)

Figure 3.5: OLED display on the receiver in process mode

If the control panel is not used for several minutes, the display darkens and switches off. Press a function button to again make the display visible. Settings for visibility, display duration, etc. can be changed via the Display menu.

3.4.3 Operating indicators on the transmitter

Located on the transmitter is an LED which serves as a function indicator.

Table 3.2: Meaning of the LED on the transmitter

LED	Color	State	Description
1	Green	ON (continuous light or flashing in sync with the measurement)	Light curtain operates continuously with maximum measurement frequency
		OFF	No communication with the receiver Light curtain waits for external trigger signal

3.5 Operating elements on the receiver control panel

Located on the receiver below the OLED display is a membrane keyboard with two function buttons for entering various functions.

Figure 3.6: Function buttons on the receiver

3.6 Menu structure of the receiver control panel

The following summary shows the structure of all menu items. In a given device model, only the actually available menu items are present for entering values or for selecting settings.

Menu level 0

Level 0
Main Settings
Digital IOs
Analog Output
Display
Information
Exit

Menu “Main Settings”

Level 1	Level 2	Description			
Commands		Teach	Reset	Factory settings	Exit

Level 1	Level 2	Description		
Operational setting	Filter depth	(enter value) min = 1 max = 255		
	Beam mode	Parallel	Diagonal	Crossed-beam
	Function reserve	High	Medium	Low
	Blanking teach	Not active	Active	
	Power-Up teach	Not active	Active	
	Smoothing	(enter value) min = 1 max = 255		
IO-Link	Bit rate	COM3: 230.4 kbit/s	COM2: 38.4 kbit/s	
	Data Storage	Deactivated	Activated	

Menu “Digital IOs”

Level 1	Level 2	Description			
IO Logic		Positive PNP	Negative NPN		
IO Pin 2 IO Pin 5 IO Pin 6 IO Pin 7	IO Function	Trigger input	Teach input	Area output	Warning output
	Inversion	Normal	Inverted		
	Teach height	Execute	Exit		
	Area logic	AND	OR		
	Start beam	(enter value) min = 1 max = 1774			
	End beam	(enter value) min = 1 max = 1774			

Menu “Display”

Level 1	Level 2	Description				
Language		English	German	French	Italian	Spanish
Operating mode		Process mode	Alignment			
Visibility		Off	Dark	Normal	Bright	Dynamic
Time unit (s)		(enter value) min = 1 max = 240				

Menu “Information”

Level 1	Level 2	Description
Product name		CSL710-R05-320.A/L-M12
Product ID		Receiver part no. (e.g., 50119835)
Serial number		Receiver serial number (e.g., 01436000288)
Tx.transmitter-ID		Transmitter part no. (e.g., 50119407)
Tx.transmitter-SN		Transmitter serial no. (e.g., 01436000289)
FW version		e.g., 01.61
HW version		e.g., A001
Kx version		e.g., P01.30e

3.7 Menu navigation on the receiver control panel

The ▼ and ↵ buttons have different functions depending on the operating situation. These functions are displayed at the left edge of the display above the icons.

3.7.1 Meaning of the display icons

Icon	Position	Function
	First line	Symbolizes that you can select the next parameter within a menu level by pressing the ▼ button.
	First line	Symbolizes that you have reached the lowest menu level (not highlighted).
	Second line	Symbolizes the respective, next menu level that you have not yet selected (not highlighted).
	Second line	Press the ↵ button to exit the menu level or the menu.
	Second line	Symbolizes the input mode. The selected (highlighted) option field can be a fixed selection parameter or a multi-digit input field. With a multi-digit input field, you can increase the active digit by one with the ▼ button and use the ↵ button to switch from one digit to the next.
	Second line	Symbolizes the confirmation of a selection. This icon appears when you complete an option field with the ↵ button.
	Second line	Symbolizes the rejection of a selection. This icon is accessed from the previous icon (check mark) by pressing the ▼ button. This mode allows you to reject the current value or option parameter by pressing the ↵ button.
	Second line	Symbolizes the return to the selection. This icon is accessed from the previous icon (cross) by pressing the ▼ button. This mode allows you to reset the current value or option parameter for the purpose of entering a new value or selecting an option parameter by pressing the ↵ button.

3.7.2 Level display

The display of bars between icons and text that span both lines indicates the open menu levels. The example shows a configuration in the menu level 2:

	Start Beam
	End beam

3.7.3 Menu navigation

↓	Main Settings
→	Digital IOs

▼ Selects the next menu item (“Digital IOs”); the other menu items follow if pressed again.

↵ Selects the highlighted submenu (“Main Settings”).

3.7.4 Editing value parameters

↓	Start Beam
→	End beam

↵ Selects the “Start Beam” menu item with the bright background.

↑	Start beam
	0001

▼ Changes the value of the first digit (**0**).

↵ Selects additional numbers for configuring values.

After entering the last number, the total value can be saved, rejected or reset.

↑	Start beam
✓	0010

↵ Saves the new value (**0010**).

▼ Changes the action mode; first ✕ and then ↻ appears on the second line.

If the selected option is not saved in the window above, but rather the ✕ action mode is selected with the ▼ button, this means:

	Start beam
	0010

↵ Rejects the current input value. The display returns to the higher-order menu level: Start Beam/ End Beam

If the action mode is selected with the ▼ button, this means:

	Start beam
	0010

↵ Resets the current input value (**0001**) and allows the entry of new values.

3.7.5 Editing selection parameters

	IO Logic
	IO Pin 2

↵ Selects the “IO Logic” menu item with the bright background.

	IO Logic
	Positive PNP

▼ With each actuation, displays the next option on this menu level, i.e., the display switches between:
- Negative NPN
- Positive PNP

↵ Selects the “Positive PNP” menu item with the bright background.

		IO Logic
		Positive PNP

▼ Changes the action mode; appears; subsequent actuation displays or again.

↵ Saves the selected option “Positive PNP”.

4 Functions

This chapter describes the functions of the light curtain for adaptation to different applications and operating conditions.

4.1 Beam modes

4.1.1 Parallel

In “parallel”-beam mode (parallel-beam scanning), the light beam of each transmitter LED is detected by the directly opposing receiver LED.

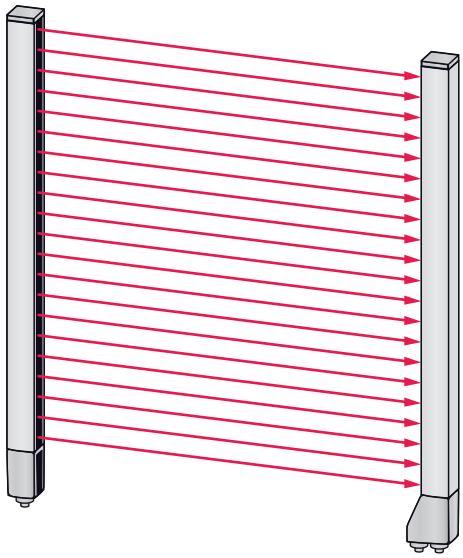

Figure 4.1: Beam path in “parallel”

4.1.2 Diagonal

In “diagonal” beam mode, the light beam of each transmitter diode is received in succession both by the directly opposing receiver diode as well as by the next receiver diode in the counting direction (i-1) (parallel and diagonal beam path). This increases the resolution in the middle between the transmitter and receiver.

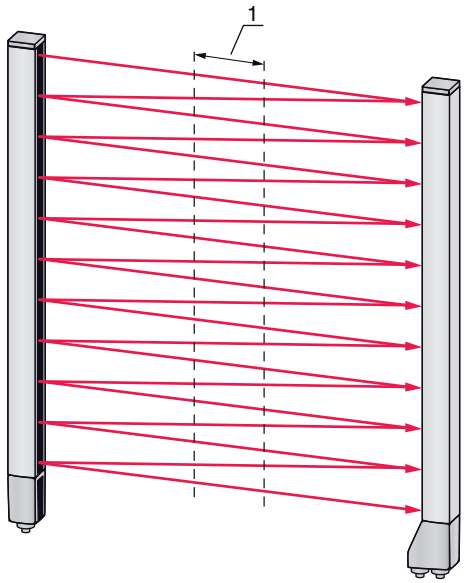

1 Area with increased resolution

Figure 4.2: Beam path in “diagonal”

Calculation

The number of beams for diagonal-beam scanning n_p is calculated from the number of beams for parallel-beam scanning n_d.

Formula for calculating the number of beams for diagonal-beam scanning

$$n_d = 2n_p - 1$$

n_d [number] = number of beams for diagonal-beam scanning
n_p [number] = number of beams for parallel-beam scanning

Example: 288 beams in parallel-beam scanning become 575 logical individual beams in diagonal-beam scanning, which must be taken into account during evaluation functions. With a beam spacing of 5 mm, this spacing is reduced to 2.5 mm in the center area.

The “diagonal” beam mode (diagonal-beam scanning) can be activated via the interface (see chapter 9) or via the *Sensor Studio* configuration software (see chapter 11).

NOTICE
Minimum distance for diagonal-beam scanning!
↳ For diagonal-beam scanning, the minimum distance that must be maintained between transmitter and receiver changes, whereby the values vary depending on beam spacing (see chapter 15).

NOTICE
Teach after changing the beam mode!
↳ Changing the beam mode changes the number of beams used for the evaluation. Perform a teach after changing the beam mode (see chapter 8.2).

4.1.3 Crossed-beam

The “crossed-beam” mode (crossed-beam scanning) is available for increasing the resolution for an area of the measurement field. In “crossed-beam” mode, the light beam of each transmitter LED is detected in succession both by the directly opposing receiver LED as well as by the two adjacent receiver LEDs (i+1, i-1).

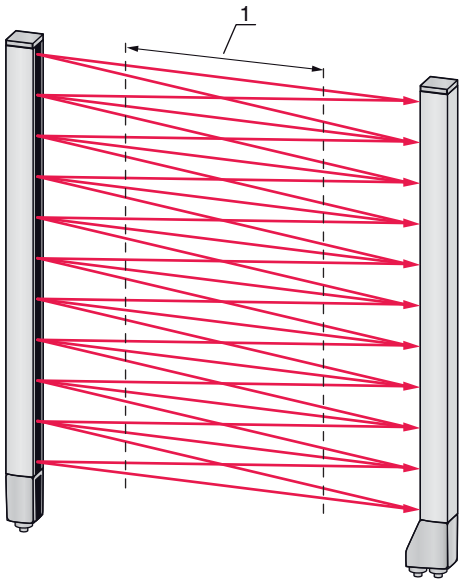

1 Area with increased resolution

Figure 4.3: Beam path in “crossed-beam”

Calculation

The number of beams for crossed-beam scanning n_p is calculated from the number of beams for parallel-beam scanning n_k.

Formula for calculating the number of beams for crossed-beam scanning

$$n_k = 3n_p - 2$$

n_K [number] = number of beams for crossed-beam scanning
n_p [number] = number of beams for parallel-beam scanning

NOTICE
Minimum distance for crossed-beam scanning!
↳ For crossed-beam scanning, the minimum distance that must be maintained between transmitter and receiver changes, whereby the values vary depending on beam spacing (see chapter 15).

Example: 288 beams in parallel-beam scanning become 862 logical beams in crossed-beam scanning. With a beam spacing of 5 mm, this spacing is reduced to 2.5 mm in the center area.

The “crossed-beam” mode (crossed-beam scanning) can be activated via the interface (see chapter 9) or via the *Sensor Studio* configuration software (see chapter 11).

4.2 Blanking

If light curtains are installed such that existing frames / cross bars etc. continuously interrupt some beams, these beams must be suppressed.

During blanking, beams that are not to be included in the evaluation are suppressed. The numbering of the beams is not affected, i.e., the suppression of beams does not change the beam numbers.

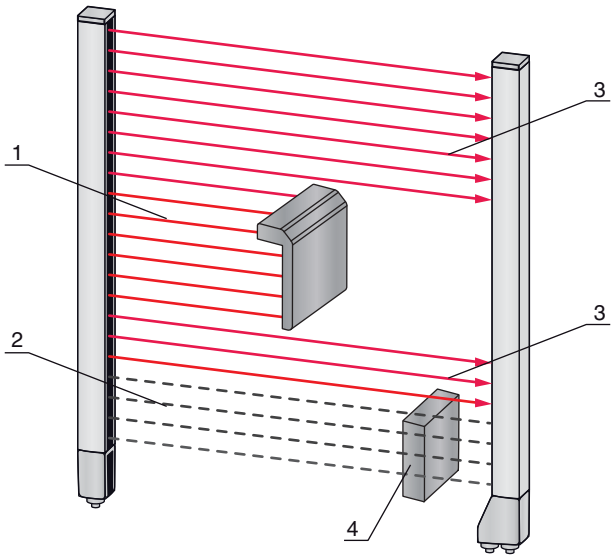

1 Interrupted beams
2 Suppressed beams (blanking)
3 Free beams
4 Object present at the installation site

Figure 4.4: Beam states

Up to four adjacent beam areas can be suppressed.

The beams can be activated or suppressed via the interface, via the *Sensor Studio* configuration software (see chapter 11) and partially via the operational controls on the receiver.

The behavior of each blanking area can be adapted to the requirements of the application:

Logical value of a blanking area	Meaning in the application
No beams are blanked	All beams of the device are included in the evaluation.
Logical value 0 for blanked beams	All beams of the blanking area are taken into account as interrupted beams (logical value 0) in the evaluation.
Logical value 1 for blanked beams	All beams of the blanking area are taken into account as free beams (logical value 1) in the evaluation.
Logical value is the same as the adjacent beam with lower beam number	All beams of the blanking area behave in the evaluation like the previous beam.
Logical value is the same as the adjacent beam with higher beam number	All beams of the blanking area behave in the evaluation like the subsequent beam.

For an example configuration, see chapter 10.3.

NOTICE

Teach after changing the blanking configuration!

↳ Perform a teach after changing the blanking configuration (see chapter 8.2).

Auto blanking during teaching

If there are obstacles present in the measurement field at the installation site and at least one blanking area is activated, interrupted beams can be mapped to the blanking area(s) during teaching. Existing settings for the blanking areas are then overwritten (see chapter 8.2).

If no beams are interrupted during teaching, no blanking areas are configured.

Auto blanking cannot be used to detect transparent objects.

Deactivated beams are lost if the beam mode is changed while auto blanking is active.

NOTICE

Deactivate auto blanking in process mode!

↳ Deactivate auto blanking in process mode.

Activate auto blanking only during commissioning of the device to suppress distracting objects.

NOTICE

Deactivate auto blanking during Power-Up Teach!

↳ Deactivate auto blanking if “Power-Up Teach” is activated (see chapter 4.3).

NOTICE

Resetting all blanking areas!

↳ To deactivate blanking areas, leave auto blanking active with at least the same number of blanking areas.

Perform a new teach in a free measurement field.

↳ To deactivate blanking with the *Sensor Studio* configuration software, configure the number of blanking areas as zero and, at the same time, deactivate each area.

Perform a new teach.

4.3 Power-Up Teach

After applying operating voltage, the “Power-Up Teach” function performs a teach event when the device is ready for operation.

- If the Power-Up teach is successful, the new teach values are adopted if they are different from the previously stored teach values.
- If the Power-Up teach is not successful (e.g. object in the light path), the previously saved teach values are used.

The Power-Up teach event can be activated via the interface, via the receiver control panel and via the *Sensor Studio* configuration software (see chapter 11).

NOTICE
Deactivate auto blanking during Power-Up Teach!
↳ Deactivate auto blanking if “Power-Up Teach” is activated.

NOTICE
No objects in the light path!
↳ During “Power-Up Teach”, ensure that no beams are partially covered by an object.

4.4 Smoothing

With the smoothing function, interrupted beams are then only taken into account in the evaluation if the set minimum number of adjacent beams is reached at the same time.

Smoothing can be used, e.g., to suppress interference caused by spot soiling of the lens cover.

Smoothing “1” means that every interrupted beam is evaluated and the device switches.

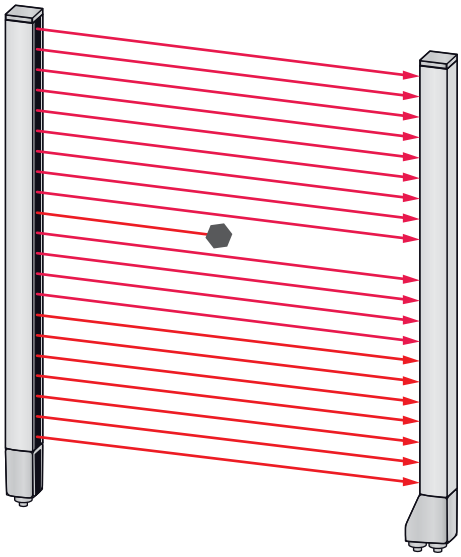

Figure 4.5: Smoothing configuration “1” – device switches

If smoothing is set to a value of “3”"

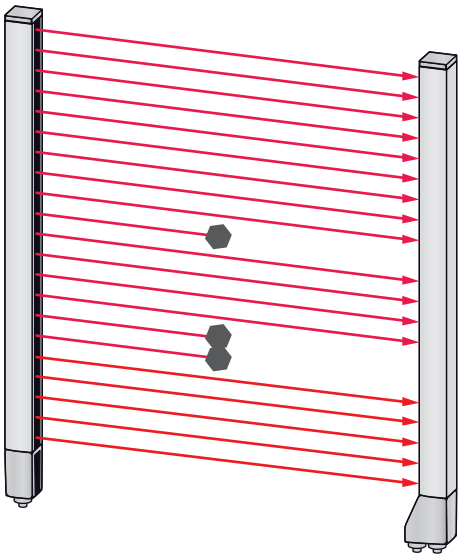

Figure 4.6: Smoothing configuration “3”, but a maximum of two adjacent beams interrupted – device does not switch

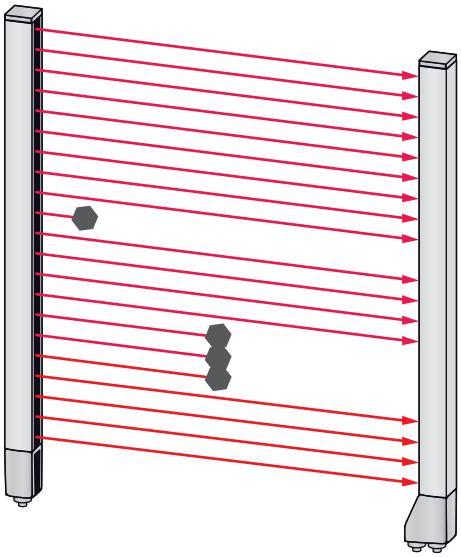

Figure 4.7: Smoothing configuration “3” and three or more adjacent beams interrupted – device switches

NOTICE
Configuration values for smoothing!
↳ Values from 1 to 255 can be entered for smoothing.

4.5 External triggering

Trigger input

For an exact time assignment, it is possible to start the measurement cycle of a light curtain in a targeted manner by means of a pulse at the trigger input.

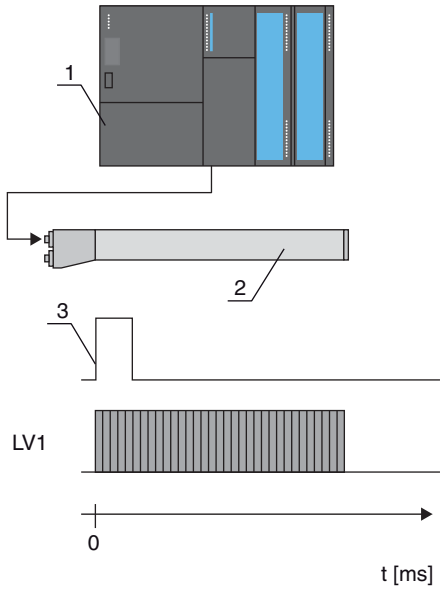

1 PLC
2 Light curtain 1
3 Trigger signal (PLC)

Figure 4.8: Activation via external trigger

4.6 Block evaluation of beam areas

This function can be used to define beam areas and evaluate them individually.

4.6.1 Defining beam area

To read out the beam states block-wise with an 8-bit telegram, the individual beams can be mapped to up to eight areas independent of the maximum beam number. The individual beam information of grouped beams is linked to a logical bit, i.e., each area is represented as 1 bit.

The number of beams in an area can be freely defined. However, the beams must be adjacent to one another. The start beam and the end beam are to be defined as well as the conditions for switching of the area.

4.6.2 Autosplitting

The beams of the device are automatically divided into the selected number of areas of the same size. The states of the areas generated in this way can be read out in the process data by means of the “Evaluation function” parameter.

Procedure:

- Select logic combination of the beams within the areas (logical AND / logical OR)
- Define number of desired areas

The autosplitting configuration can be defined via the interface (see chapter 9) or via the *Sensor Studio* configuration software (see chapter 11).

4.6.3 Mapping beam area to switching output

If grouping individual beams or if creating a block, the beam state of any number of adjacent beams (area) can be signaled at a switching output.

The following options are possible here:

- To use a specific, single beam for the evaluation, e.g., as trigger signal for a primary control.
- To group the complete measurement field into one switching area and thereby signal at the switching output whether an object (at any position) is located in the measurement field.
- To configure up to eight switching areas for a reference check or height monitoring; in many cases, this can make beam-data processing in the primary programmable logic control (PLC) unnecessary.

The switching conditions for the areas can be either AND or OR linked:

Logic function	Group bit (area status) [logic 1/0]	
AND	1	If all beams mapped to the area are interrupted
	0	If at least one beam is not interrupted in the selected area
OR	1	If at least one beam is interrupted in the selected area
	0	If none of the beams mapped to the area are interrupted

Areas may be sequential or overlapping. A maximum of 8 areas are available.

The switching behavior or the conditions for switching a beam area on and off can be defined via the interface (see chapter 9) or via the *Sensor Studio* configuration software (see chapter 11).

For an example configuration, see chapter 10.1.

Example for the configuration of an OR or AND link for a light curtain with 32 beams

	OR	AND
Start beam	1	1
End beam	32	32
Switch-on condition	1 beam interrupted	32 beams interrupted
Switch-off condition	0 beams interrupted	31 beams interrupted

The following figure shows how the beam areas can be arranged directly next to one another or freely overlapping.

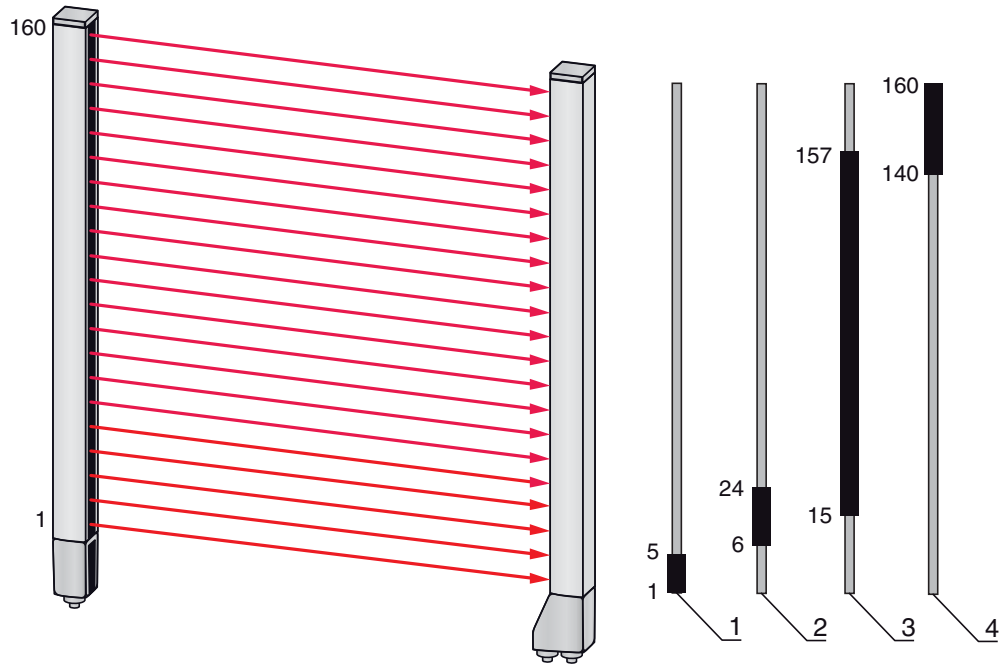

1	Beam area 1
2	Beam area 2
3	Beam area 3
4	Beam area 4

Figure 4.9: Beam areas

For a mapping of previously defined beam areas to, e.g., four switching outputs (Q1 to Q4), see chapter 10.1.

NOTICE
Increased number of logical beams for the diagonal- or crossed-beam function!
↳ Take into account the (increased) number of beams if the “diagonal”- or “crossed-beam” mode is activated (see chapter 4.1.2 or see chapter 4.1.3).

4.6.4 Teach height area

With the “Teach height area” function, it is possible to teach in up to eight height areas, e.g. for height monitoring or sorting packets. In many cases, this saves time for programming.

- A maximum of eight height areas are available.
- A height area is automatically defined using an object.
  When teaching a height area, all free beams above or below the object are combined into one height area. Therefore, the object cannot be located in the center of the measurement field length; the first or last beam must be interrupted.

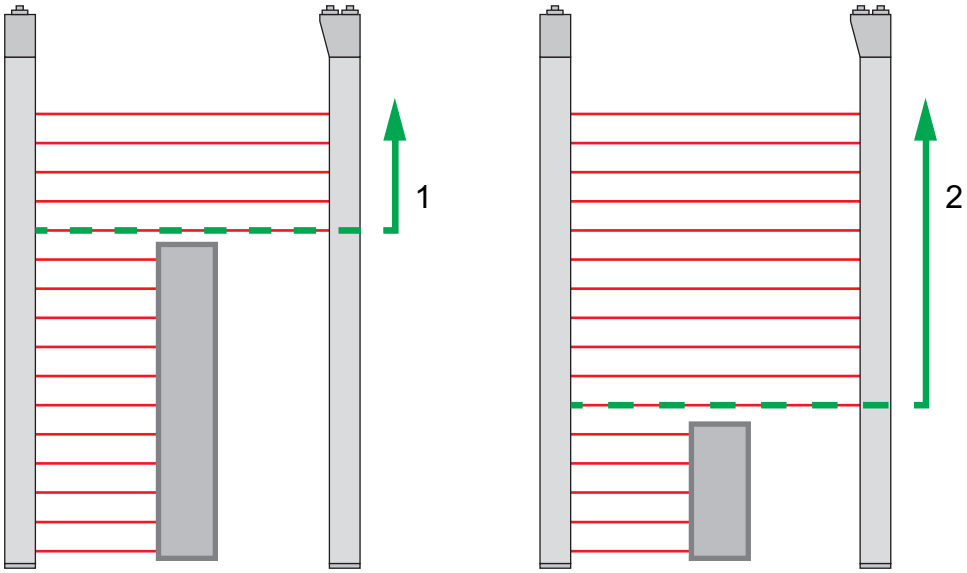

1 Teaching height area 1
2 Teaching height area 2

Figure 4.10: Teaching the height area with the “Teach in height area”

- To define the entire beam area as a height area, teaching of the height area is performed without an object (all beams free).

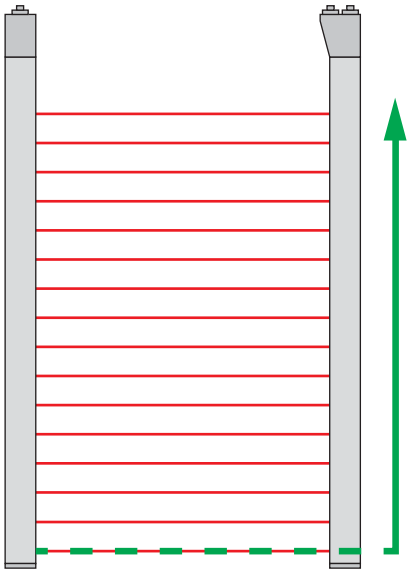

Figure 4.11: Teaching of the total beam area as height area without object

- The switching behavior or the conditions for switching the height area on or off via the “Teach height area” function is permanently defined as OR.
- Every IO pin can be assigned to a height area via the receiver control panel.
  Example: **Digital IOs > IO Pin 2 > Teach height > Execute**

On the receiver control panel, the “Teach height area” function is activated via the **Teach height** menu item. Example: **Digital IOs > IO Pin 2 > Teach height > Execute**

If the “Teach height area” function is activated via the receiver control panel, the IO pins are automatically assigned to the height areas.

Example configurations for the assignment of previously defined height areas to switching outputs Q1 to Q4:

- see chapter 10.1 "Example configuration - Mapping of beams 1 … 32 to output pin 2"
- see chapter 10.2 "Example configuration – Teach height area"

4.7 Switching outputs

4.7.1 Light/dark switching

The behavior of switching outputs Q1 to Q4 (or Q1 to Q2) can be configured with respect to light/dark switching. The setting ex works is “light switching”, i.e., the outputs are activated if the light paths are free and become inactive if an object is detected in the measurement field.

The output behavior can be changed to “dark switching” via the interface (see chapter 9), via the receiver control panel and via the *Sensor Studio* configuration software (see chapter 11).

4.7.2 Time functions

Each of the individual switching outputs can be assigned one of the time functions described in the following table.

The accuracy of the switching delay is dependent on the measurement frequency. Observe this especially in cascaded operation.

Time function	Selectable Duration	Description
Start-up delay with re-trigger	0 … 65000 ms	Time that the sensor delays the start-up process after detecting an object. By means of a start-up delay, it is possible to suppress, e.g., upward-protruding packaging remnants (stretch wrap, etc.) during pallet height monitoring.
Switch-off delay with re-trigger	0 … 65000 ms	Time that the sensor delays the switching back of the output if the object leaves the detection range.
Pulse stretching	0 … 65000 ms	Minimum time that the state of the output is retained independent of what the sensor detects during this time. Pulse stretching is necessary for, e.g., hole recognition if the PLC cycle time does not register short pulses.
Pulse suppression with re-trigger	0 … 65000 ms	Minimum time that a measurement signal must be present in order for the output to switch. Short interference pulses are thereby suppressed.

The various time functions can be configured via the interface (see chapter 9) or via the *Sensor Studio* configuration software (see chapter 11).

4.8 Interference suppression (filter depth)

To suppress any faulty measurement values that may occur due to interference (ambient light, electromagnetic fields, …), the filter depth of the light curtain can be increased.

“Filter depth” means that an interrupted/free beam is not included in the further data evaluation until the same beam status is recorded for the set number of measurement cycles.

Filter depth “1” = the beam states of each measurement cycle are output.

Filter depth “3” = only those beam states that were stable over three measurement cycles are output.

The configuration of the filter depth can be defined via the interface (see chapter 9) or via the *Sensor Studio* configuration software (see chapter 11).

5 Applications

The following typical applications with corresponding function (see chapter 4) exist for the switching light curtain.

5.1 Object counting

Figure 5.1: Object counting

For object counting, the switching output is assigned to an IO pin. The evaluation is done by an external program.

↳ Function: *mapping beam area to switching output*

For more precise object counting, e.g. when several small objects are located in the measurement field, you can select crossed-beam scanning and divide the measurement field into up to eight areas. The states of the areas generated are read out in the process data by means of the *Evaluation function* parameter.

↳ Function: *beam mode: crossed beam*

↳ Function: *autosplitting* and *evaluation function (process data content)*

5.2 Height monitoring and sorting of packets

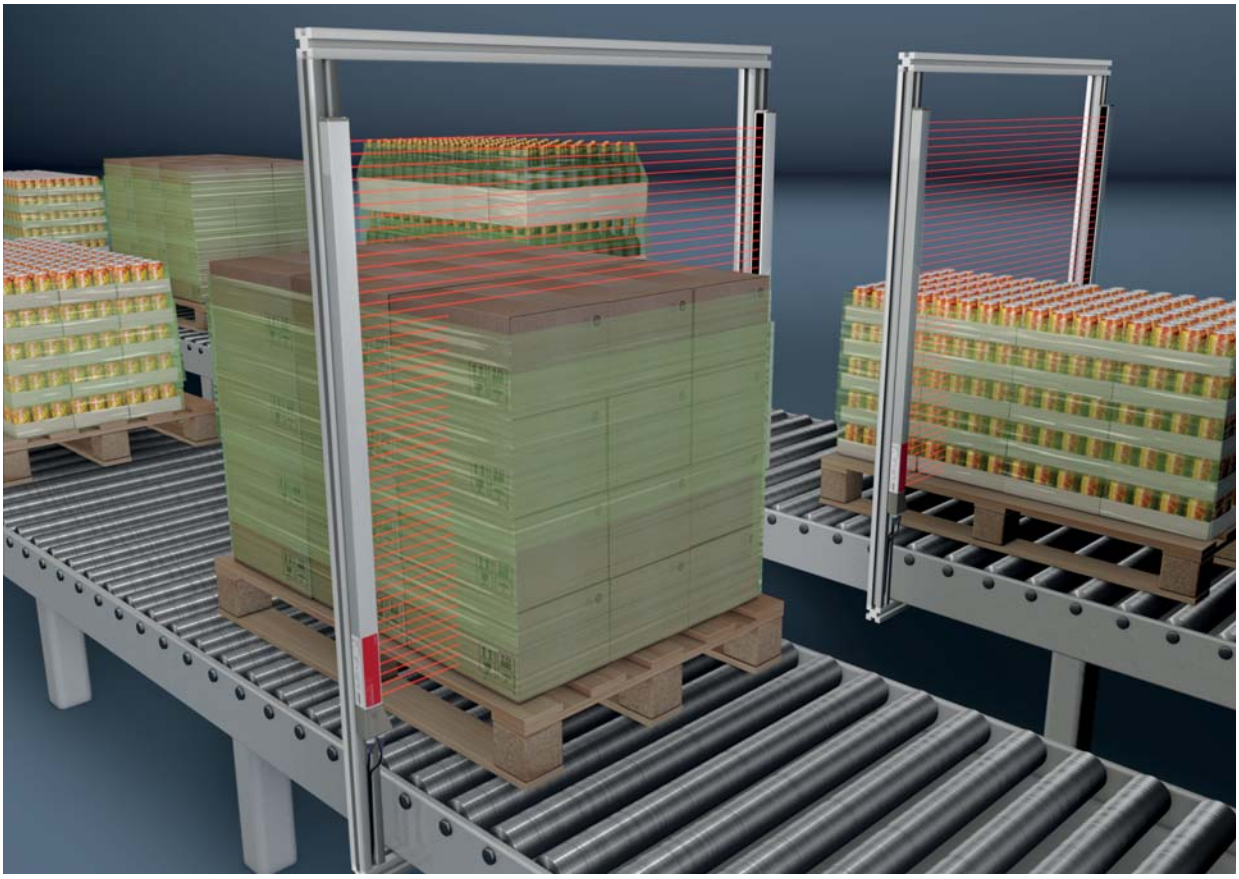

Figure 5.2: Sorting packets

Packets can be sorted into up to eight height classes.
Example: sorting into classes S (small), M (medium) and L (large):

- Teach the three height areas (see chapter 4.6.4).
- Assign a switching output to every height area (see chapter 4.6.3).

↳ Function: *teach height area*

5.3 Hole recognition

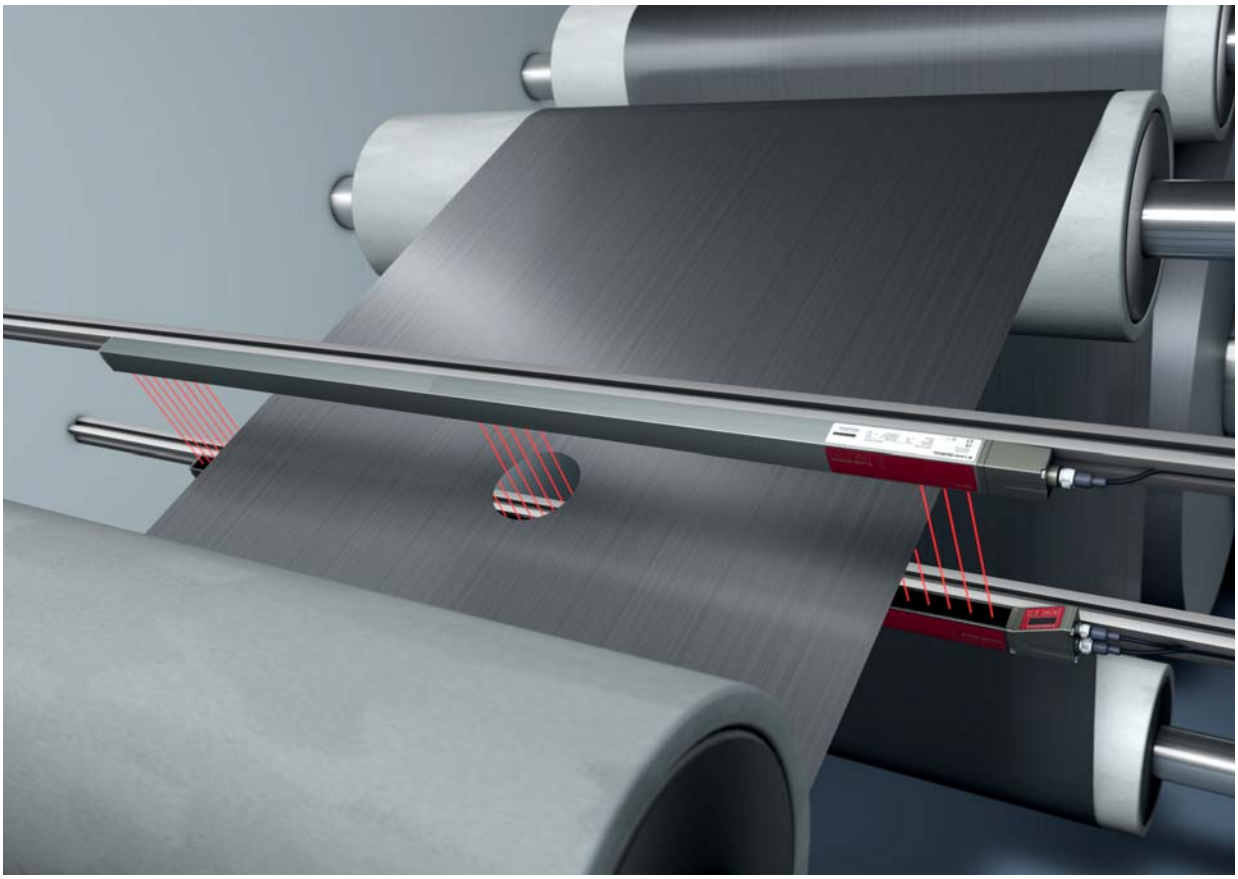

Figure 5.3: Hole recognition

For hole recognition within a web material, a beam area must be defined over the area to be monitored and mapped to an output. All beams in this area are interrupted. If a beam becomes “free” due to a flaw in the material, the output switches.

↳ Function: *block evaluation of beam areas* (see chapter 4.6)

6 Mounting and installation

6.1 Mounting the light curtain

NOTICE
No reflective surfaces, no mutual interference!
↳ Avoid reflective surfaces near the light curtains. Objects may otherwise not be precisely detected due to halation. ↳ Ensure sufficient distance, suitable positioning or partitioning. Optical sensors (e.g., other light curtains, photoelectric sensors, etc.) must not interfere with one another. ↳ Avoid interference from outside light (e.g., from flash lamps, direct sunlight) on the receiver.

Mount the transmitter and receiver as follows:

↳ Select the fastening type for transmitter and receiver.

- Fastening via the T-groove on one side of the standard profile (see chapter 6.3).
- Fastening via the rotating bracket on the ends of the profile (see chapter 6.4).
- Fastening via the swiveling mounting brackets or parallel brackets (see chapter 6.5).

↳ Have a suitable tool at hand and mount the light curtain in accordance with the notices regarding the mounting locations.

↳ Mount the transmitter and receiver at the same height or with the same housing reference edge, free of tension and with the base in full contact with the mounting surface.

NOTICE
Must be observed!
↳ For horizontally mounted measuring light curtains with lengths of more than 2,000 mm, use an additional mounting bracket in the middle of the light curtain. ↳ The optical surfaces of transmitter and receiver must be parallel to and opposite one another. ↳ The transmitter and receiver connections must point in the same direction.

↳ Secure transmitter and receiver against turning or sliding.

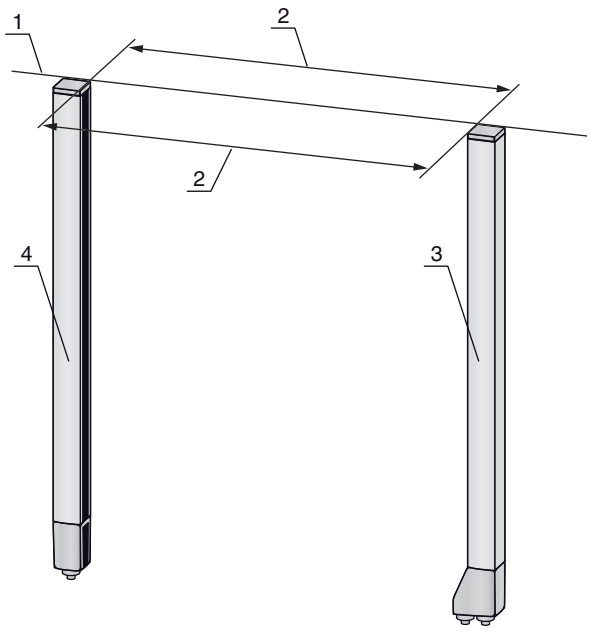

1 Same height position / upper edge
2 Parallel alignment
3 Receiver
4 Transmitter

Figure 6.1: Arrangement of transmitter and receiver

To achieve the maximum operating range limit, transmitter and receiver must be aligned with one another as accurately as possible.

After mounting, you can electrically connect (see chapter 7) and start up (see chapter 8) the light curtain.

6.2 Definition of directions of movement

The following terms for alignment movements of the light curtain around one of its individual beams are used:

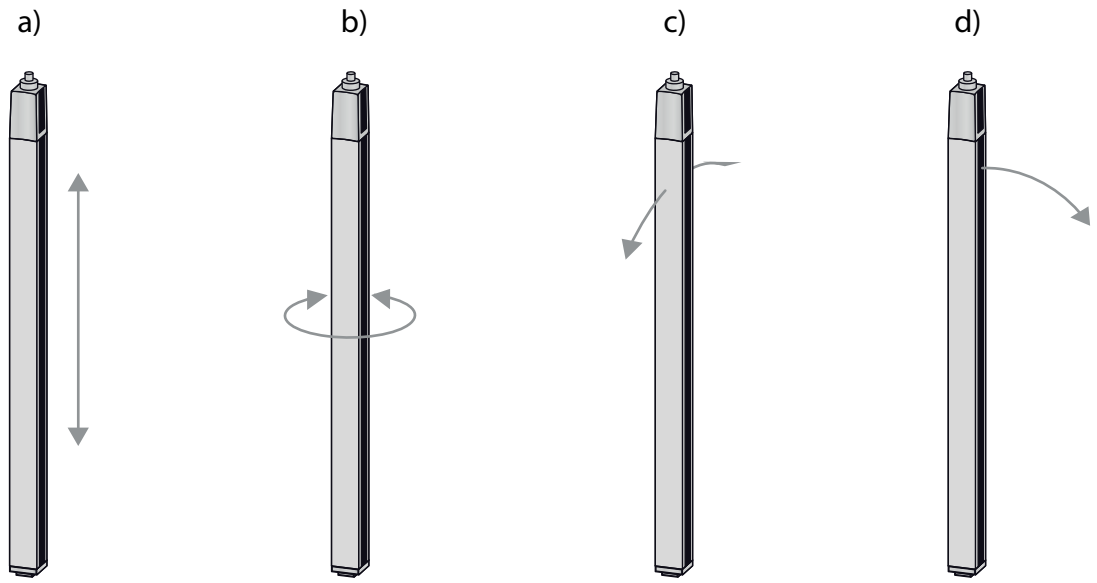

a Sliding: movement along the longitudinal axis
b Turning: movement around the longitudinal axis
c Tilting: lateral turning movement diagonal to the lens cover
d Pitching: lateral turning movement in the direction of the lens cover

Figure 6.2: Directions of movement during alignment of the light curtain

6.3 Fastening via sliding blocks

By default, transmitter and receiver are delivered with two sliding blocks (three sliding blocks for measurement field lengths of more than 2,000 mm) each in the side groove (see chapter 16).

↳ Fasten transmitter and receiver to the machine or system via the lateral T-groove with M6 screws.

Sliding in the direction of the groove is possible, but turning, tilting and pitching is not.

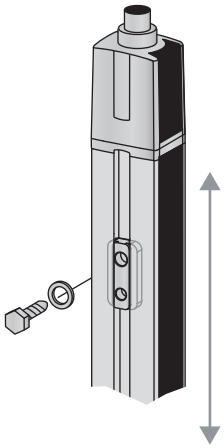

Figure 6.3: Mounting via sliding blocks

6.4 Fastening via swivel mount

When mounting with the BT-2R1 swivel mount (see table 16.7), sold separately, the light curtain can be aligned as follows:

- Sliding through the vertical threaded holes in the wall plate of the swivel mount
- Turning by 360° around the longitudinal axis by fixing on the screw-on cone
- Tilting around main axis
- Pitching through horizontal threaded holes in the wall mounting

The wall mounting through threaded holes makes it possible to lift the mounting bracket after the screws have been loosened over the connection cap. Therefore, the mounting brackets do not need to be removed from the wall when exchanging the device. Loosening the screws is sufficient.

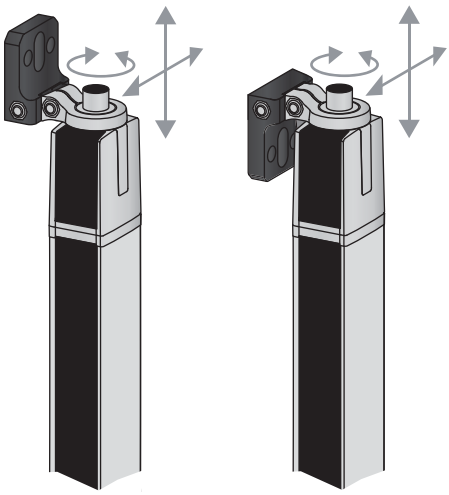

Figure 6.4: Mounting via swivel mount

One-sided mounting on the machine table

The sensor can be mounted directly on the machine table via an M5 screw on the blind hole in the end cap. On the other end, a BT-2R1 swivel mount can be used, for example, so that turning movements for alignment are possible despite the fact that the sensor is mounted on one side.

NOTICE
Avoid reflection bypasses at the machine table! ↳ Make sure that reflections on the machine table and in the vicinity are prevented reliably.

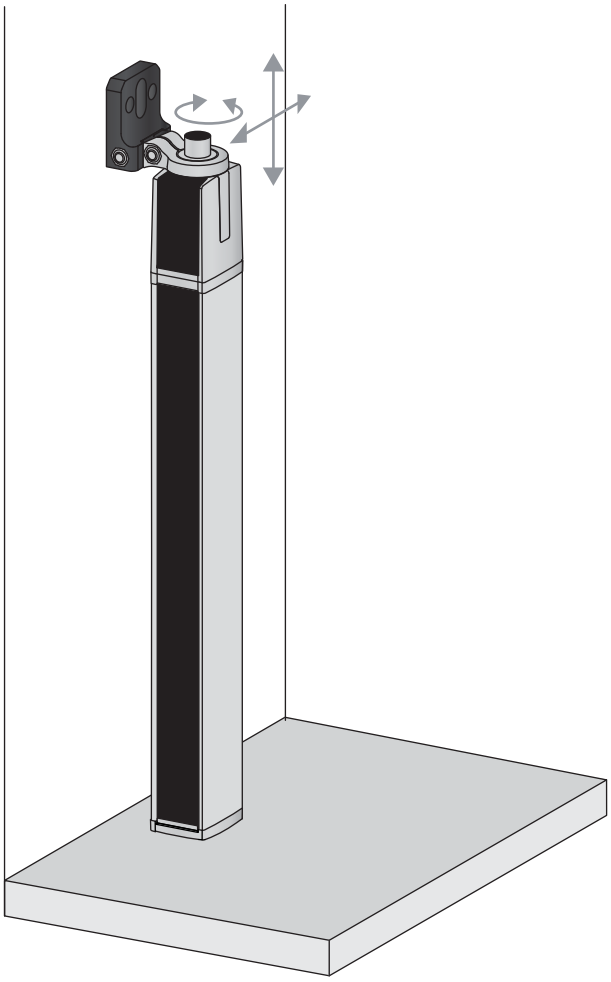

Figure 6.5: Mounting directly on the machine table

6.5 Fastening via swiveling mounting brackets

When mounting with the BT-2SSD/BT-4SSD or BT-2SSD-270 swiveling mounting brackets (see table 16.7), sold separately, the light curtain can be aligned as follows:

- Sliding in the direction of slot
- Turning +/- 8° around the longitudinal axis

The BT-SSD (see figure 15.5) swiveling mounting brackets are also equipped with a vibration damper.

7 Electrical connection

7.1 Shielding and line lengths

The light curtains are equipped with modern electronics developed for industrial applications. In industrial environments, a number of sources of interference may affect the light curtains.

In the following, information is provided on the EMC-compliant wiring of the light curtains and the other components in the switch cabinet.

7.1.1 Shielding

NOTICE

General shielding information!

- Avoid interference emissions when using power components (frequency inverters, …).

  The necessary specifications under which the power component satisfies its CE Declaration of Conformity can be found in the technical descriptions of the power components.

  In practice, the following measures have proven effective:

  Properly ground the total system.

  Screw mains filter, frequency inverter, etc., flat to a galvanized mounting plate (thickness 3 mm) in the switch cabinet.

  Keep cable between mains filter and inverter as short as possible and twist cables.

  Shield both ends of the motor cable.
- Carefully ground all parts of the machine and of the switch cabinet using copper strips, ground rails or grounding cables with large cross section.
- Keep the length of the shieldless end of the cable as short as possible.
- Guide the shielding untwisted to a terminal (no “RF braid”).

NOTICE

Separate power and control cables!

- Lay the cables for the power components (mains filter, frequency inverter, …) as far from the light curtain cables as possible (distance > 30 cm).
- Avoid laying power and light curtain cables parallel to one another.
- Cable crossings should be laid as perpendicular as possible.

NOTICE

Lay cables close to grounded metal surfaces!

- Lay the cables on grounded metal surfaces

  This measure reduces interference coupling in the cables.

NOTICE

Avoid leakage currents in the cable shielding!

- Carefully ground all parts of the machine.

  Leakage currents arise from incorrectly implemented equipotential bonding.

  You can measure leakage currents with a clip-on ammeter.

NOTICE

Star-shaped cable connections!

- Ensure that the devices are connected in a star-shaped arrangement.

  You thereby avoid mutual influences from various loads.

  This prevents cable loops.

Grounding the light curtain housings

- Connect the transmitter housing **and** receiver housing of the light curtain to the protective conductor on the FE machine star point via the PE screw on the grounding slot nut (see figure 7.1).

  The cable should have an impedance as low as possible for high-frequency signals, i.e., be as short as possible and have a large cross-sectional area (grounding strip, …).
- Use a lock washer and check the penetration of the anodized layer.
- Check the small Allen screw to ensure a secure connection between the grounding slot nut and housing.

  The Allen screw is correctly tightened upon delivery from the factory.

  If you have changed the position of the grounding slot nut or the PE screw, tighten the small Allen screw.

Figure 7.1: Connecting the ground potential to the light curtain

Example for shielding both ends of the connection cables from the switch cabinet to the light curtain

- Ground the transmitter housing and receiver housing of the light curtain (see chapter "Grounding the light curtain housings").
- Clamp the shield in the switch cabinet flat to FE (see figure 7.2).

  Use special shielding terminals (e.g., Wago, Weidmüller, …).

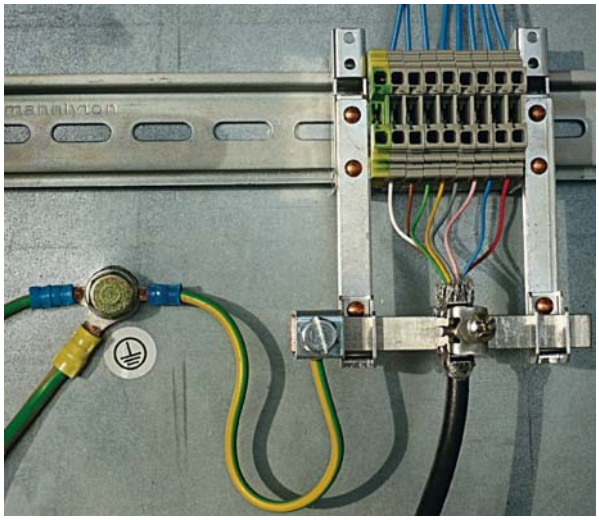

Figure 7.2: Connecting the cable shielding in the switch cabinet

Depicted shielding components from Wago, series 790 …:

- 790 … 108 screen clamping saddle 11 mm

- 790 … 300 busbar holder for TS35

Example for shielding both ends of the connection cables from the PLC to the light curtain

- Ground the transmitter housing and receiver housing of the light curtain (see chapter "Grounding the light curtain housings").
- Only lay shielded light curtain cables to the PLC.
- Clamp the shield flat to FE in the PLC (see figure 7.3).

  Use special shielding terminals (e.g., Wago, Weidmüller, …).
- Make certain that the mounting rail is well grounded.

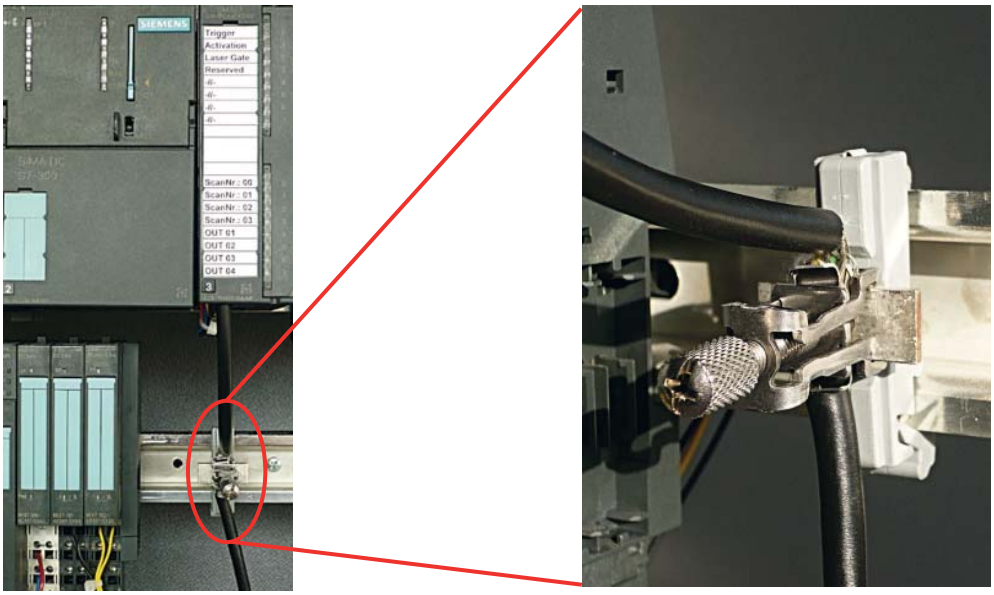

Figure 7.3: Connecting the cable shielding to the PLC

Depicted shielding components from Wago, series 790 …:

- 790 … 108 screen clamping saddle 11 mm

- 790 … 112 carrier with grounding foot for TS35

7.1.2 Cable lengths for shielded cables

- Observe the maximum cable lengths for shielded cables.

Table 7.1: Cable lengths for shielded cables

Connection to the CSL 710	Interface	Max. cable length	Shielding
PWR IN/digital IO, IO-Link	X1	20 m	required
Synchronization cable	X2/X3	20 m	required

Designation of the interface connections: see chapter 7.3 "Device connections"

7.2 Connection and interconnection cables

Use only the cables listed in the accessories (see chapter 16) for all connections (connection cable, interconnection cable, cable between transmitter and receiver).

Use only shielded cables for the cable between transmitter and receiver.

NOTICE
Competent persons and approved purpose!
↳ Only allow competent persons to perform the electrical connection.
↳ Select the functions so that the light curtain can be used as intended (see chapter 2.1).

7.3 Device connections

The light curtain is provided with the following connections:

Device connection	Type	Function
X1 on receiver	M12 connector, 8-pin	Control interface and data interface: • Voltage supply • Switching outputs and control inputs • Configuration interface
X2 on receiver	M12 socket, 4-/5-pin	Synchronization interface
X3 on transmitter	M12 connector, 5-pin	Synchronization interface (for all controller types)

7.4 Digital inputs/outputs on connection X1

In the factory settings, the digital inputs/outputs are assigned with the following functions:

- IO 1 (pin 2): teach input
- IO 2 (pin 5): switching output (dark/inverted)
- IO 3 (pin 6): switching output (light/normal)
- IO 4 (pin 7): warning output

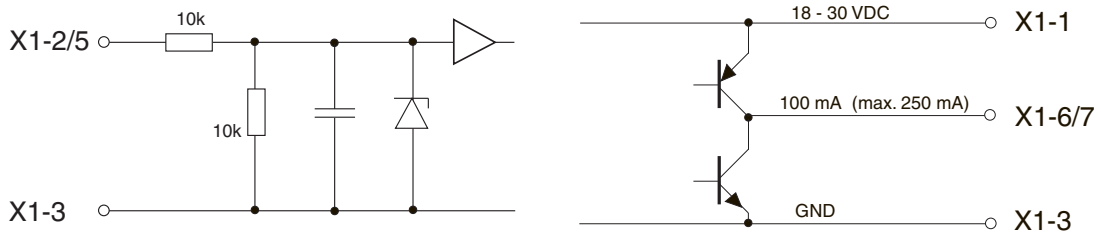

Figure 7.4: Digital input/output schematic diagram

NOTICE
Single assignment of input functions!
↳ Each input function may only be used one time. If multiple inputs are assigned the same function, malfunctions may occur.

7.5 Electrical connection – CSL 710

NOTICE
Light curtain grounding!
↳ Ground the light curtain before establishing an electrical connection or connecting the voltage supply (see chapter "Grounding the light curtain housings").

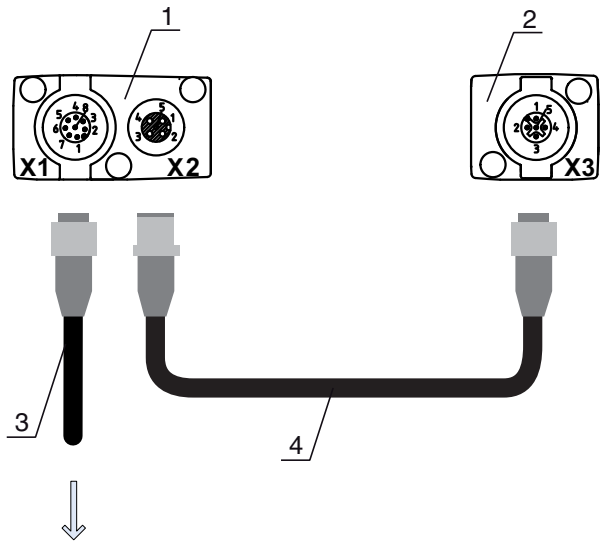

1 Receiver (R)
2 Transmitter (T)
3 Connection cable (M12 socket, 8-pin), see table 16.3
4 Synchronization cable (M12 plug/socket, 5-pin), see table 16.4

Figure 7.5: Electrical connection – CSL 710

↳ Connect connection X2 to connection X3 using the appropriate synchronization cable.

↳ Connect connection X1 to the voltage supply and the control using the appropriate connection cable.

7.5.1 X1 pin assignment – CSL 710

8-pin, M12 plug (A-coded) for connecting to PWR IN/digital IO and IO-Link interface.

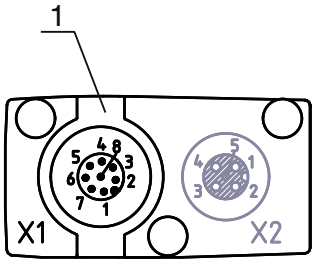

1 M12 plug (8-pin, A-coded)

Figure 7.6: X1 connection – CSL 710

Table 7.2: X1 pin assignment – CSL 710

Pin	X1 - Logic and power on the receiver
1	VIN: +24 V DC supply voltage
2	IO 1: input/output (configurable) Ex works: teach input (Teach In)
3	GND: ground (0 V)
4	C/Q: IO-Link communication
5	IO 2: input/output (configurable) Factory setting: switching output (dark/inverted)

Pin	X1 - Logic and power on the receiver
6	IO 3: input/output (configurable) Factory setting: switching output (light/normal)
7	IO 4: input/output (configurable) Factory setting: warning output
8	GND: ground (0 V)

Connection cables: see table 16.3.

7.5.2 X2/X3 pin assignment – CSL 710

5-pin, M12 socket/plug (A-coded) for the connection between transmitter and receiver.

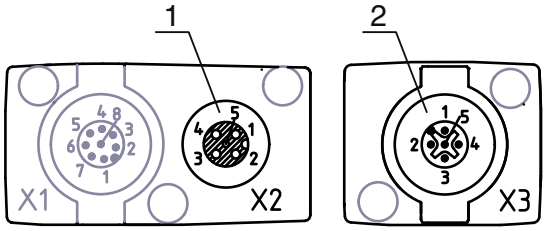

1 M12 socket X2 (5-pin, A-coded)
2 M12 plug X3 (5-pin, A-coded)

Figure 7.7: X2/X3 connection – CSL 710

Table 7.3: X2/X3 pin assignment – CSL 710

Pin	X2/X3 - Transmitter and receiver
1	SHD: FE functional earth, shield
2	VIN: +24 V DC supply voltage
3	GND: ground (0 V)
4	RS 485 Tx+: synchronization
5	RS 485 Tx-: synchronization

Interconnection cables: see table 16.4.

7.6 Electrical supply

With regard to the data for the electrical supply, see table 15.6.

8 Starting up the device - Basic configuration

The basic configuration includes the alignment of transmitter and receiver and the basic configuration steps via the receiver control panel.

The following optional basic functions are available for operation and configuration via the receiver control panel:

- Define digital inputs/outputs
- Defining the filter depth
- Defining the display properties
- Changing the language
- Product information
- Resetting to factory settings

8.1 Aligning transmitter and receiver

NOTICE
Alignment during commissioning!
↳ The alignment performed during commissioning should only be performed by qualified personnel.
↳ Observe the data sheets and mounting instructions of the individual components.

Prerequisites:

- The light curtain has been mounted (see chapter 6) and connected (see chapter 7) correctly.

↳ Switch on the light curtain.

NOTICE
Alignment mode!
↳ When switched on for the first time ex works, the light curtain automatically starts in process mode.
↳ You can switch from process mode to alignment mode via the control panel.

↳ Check whether the green LEDs on the receiver control panel and transmitter illuminate continuously.

The display shows the alignment state of the first beam (FB) and last beam (LB) via two bar graph indicators.

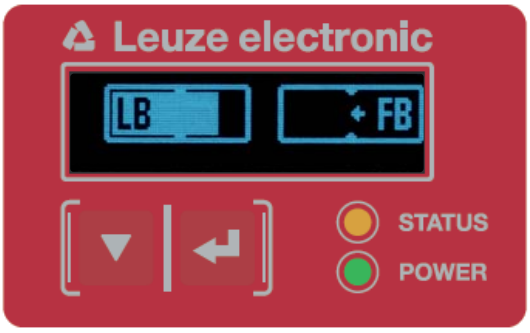

Figure 8.1: Example: display showing an incorrectly aligned light curtain

↳ Loosen the fastening screws of the transmitter and receiver.

Loosen the screws only enough so that the devices can just be moved.

↳ Turn or slide the transmitter and receiver until the optimum position is reached and the bar graph indicators show the maximum values for the alignment.

NOTICE
Minimum sensitivity of the sensor! ↳ In order to perform a teach, a minimum level must be reached in the bar graph indicator (mark in the middle of the display).

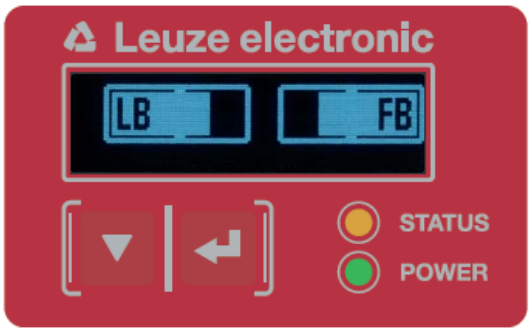

Figure 8.2: Display showing an optimally aligned light curtain

↳ Tighten the fastening screws of the transmitter and receiver.

Transmitter and receiver are aligned.

Switching to process mode

After aligning, switch to process mode.

↳ Select **Display > Mode > Process mode**.

The display in the receiver of the light curtain shows the process mode states with the total of interrupted beams (TIB) and the logic states of the digital inputs/outputs (digital IOs).

Figure 8.3: Display showing the process mode state of the light curtain

The structure of the configuration in the receiver control panel menu is as follows:

Level 0	Level 1	Level 2	Description				
Display							
	Language		English	German	French	Spanish	Italian
	Operating mode		**Process mode**	Alignment			

Switching to alignment mode

You can switch from process mode to alignment mode via the menu.

↳ Select **Display > Mode > Alignment**.

The structure of the configuration in the receiver control panel menu is as follows:

Level 0	Level 1	Level 2	Description				
Display							
	Language		English	German	French	Spanish	Italian
	Operating mode		Process mode	**Alignment**			

The next configuration step is teaching the environmental conditions (teach).

8.2 Teaching the environmental conditions

During teaching, the system checks whether the signals of all beams are within a certain corridor.

This means that a teach event generally regulates all beams to the preset function reserve (or sensitivity) for the current operating range. This ensures that all beams exhibit an identical switching behavior.

NOTICE

Conditions for performing a teach!

- When teaching without preconfigured blanking areas, the light path must always be completely free. A teaching error will otherwise occur.
- In this case, remove the obstacles and repeat the teach.
- If the light path is partially interrupted by structural elements, the permanently interrupted beams can be suppressed by means of blanking (*auto blanking* function). Interrupted beams are “deactivated” in this case.
- To automatically suppress the affected beams during teaching, configure the number of blanking areas via the configuration software *Sensor Studio* (see chapter 11).

The configuration can be performed via the interface (see chapter 9) or via the *Sensor Studio* configuration software (see chapter 11).

You can choose whether the teach values are to be stored permanently or only temporarily (while the operating voltage is applied). The configuration ex works is for permanent (non-volatile) storage.

A teach event can be performed both directly from process mode as well as from alignment mode.

NOTICE

Execute teach after changing the beam mode!

- Always perform a teach after changing the beam mode (parallel-/diagonal-/crossed-beam scanning) as well.

Prerequisites:

- The light curtain must be correctly aligned (see chapter 8.1).
- The bar graph indicator must show a minimum level.

You can use one of the following teach types:

Teach via receiver control panel (see chapter 8.2.1).

Teach via teach input (see chapter 8.2.2).

Teach via interface (IO-Link, see chapter 9).

Teach via *Sensor Studio* configuration software (see chapter 11).

8.2.1 Teach via receiver control panel

If blanking areas are configured via the configuration software interface, a teach event is performed that takes these blanking areas into account (blanking teach or auto blanking, see chapter 4.2).

During a blanking teach or auto blanking, an “additional distance” is always added to the beams detected as interrupted. Safer operation is thereby achieved, e.g., in the case of vibrating guides, etc., in the “blanked” area.

Optimization of the blanked beams is to be performed via a software interface configuration.

A maximum of four adjacent areas of suppressed beams (blanking areas) can be configured.

The structure of the configuration in the receiver control panel menu is as follows:

Level 0	Level 1	Level 2	Description		
Main Settings					
	Commands		Teach	Reset	Factory settings

↳ Select **Main Settings > Command > Teach**.

↳ Press the ↵ button to execute the teach.

The display shows

Wait...

If the teach was started while in process mode, the display returns to the process mode display after a successful teach (see chapter 8.1).

If the teach was started from alignment mode, the display returns to the bar graph indicator following a successful teach and shows the received signal level of the first beam (FB) and the last beam (LB) (see chapter 8.1).

If teach is successful, both bars display the maximum value.

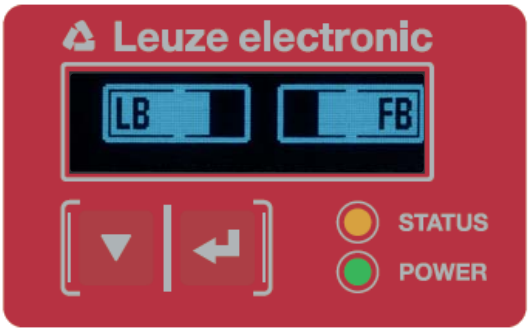

Figure 8.4: Display after successful teach

If no bars are visible in the bar graph indicator for the first beam (FB) and the last beam (LB), an error has occurred. It is possible, e.g., that the reception signal is too low. You can correct errors according to the error list (see chapter 12).

Power-Up Teach

After applying operating voltage, the “Power-Up Teach”"

The structure of the configuration in the receiver control panel menu is as follows:

Level 0	Level 1	Level 2	Description		
Main Settings					
	Commands		Teach	Reset	Factory settings
	Operational setting				
		Filter depth			
		Beam mode			
		Function reserve			
		Blanking teach			
		Power-Up Teach	Not active	**Active**	

↳ Select **Main Settings > Operation Settings > Power-Up Teach > Active**.

8.2.2 Teaching via a control signal from the control

Teach input (Teach In)

This input can be used to perform a teach following initial commissioning, change of the alignment or during operation. During this procedure, the transmitter and receiver adjust themselves to the maximum function reserve according to the distance.

To trigger a teach, a pulse must be applied on connection X1 on the receiver IO1 = pin 2 (factory setting) for longer than 20 ms … but less than 80 ms.

Depending on the configuration (PNP or NPN), this corresponds to the following signal response:

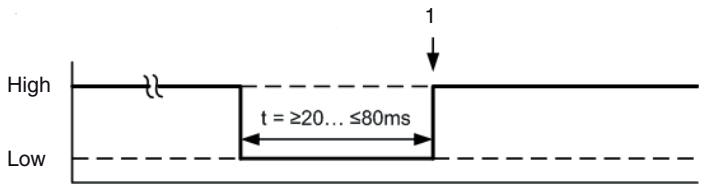

1 Teach is performed here

Figure 8.5: Control signals for line teach with PNP configuration

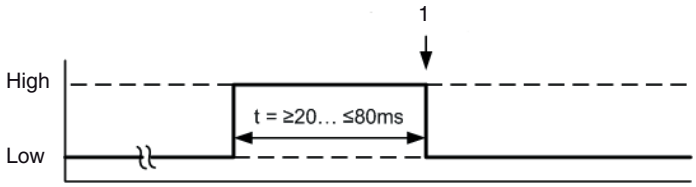

1 Teach is performed here

Figure 8.6: Control signals for line teach with NPN configuration

Performing a teach via the line input

Prerequisites:

- The light curtain must be correctly aligned (see chapter 8.1).
- A connection must be established between PLC and the line input (teach-in).

↳ Send a teach signal to the teach input via the control (see chapter "Teach input (Teach In)" for the data) to trigger a teach.

The display on the receiver control panel shows

Wait...

Following a successful teach, the display switches back to the bar graph (alignment mode).

If teach is successful, both bars display the maximum value.

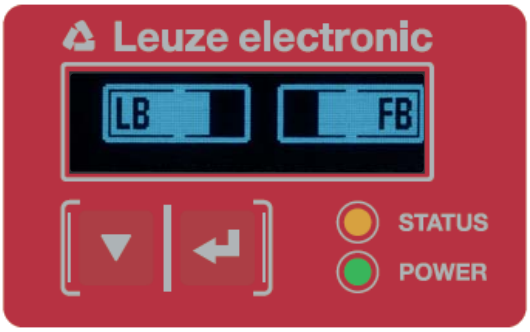

Figure 8.7: Display after successful teach

The next configuration step is to check the alignment.

8.3 Check alignment

Prerequisites:

- The light curtain must first be correctly aligned and a teach must be performed.

↳ Check whether the green LEDs on the receiver control panel and transmitter illuminate continuously.

↳ Use the bar graph indicator to check whether the light curtain is optimally aligned, i.e., whether the maximum is reached for both the first beam (FB) and the last beam (LB) in the bar graph indicator.

↳ Use the bar graph indicator to check the optimum alignment of the light curtain if you have corrected an error that occurred.

The next configuration steps:

- Perform extended configurations on the receiver control panel if necessary (see chapter 8.5)
- Starting up the CSL 710 light curtains (see chapter 9)

8.4 Setting the function reserve

The function reserve can be set to three levels:

- High function reserve (low sensitivity)
- Medium function reserve
- Low function reserve (high sensitivity)

The function reserve can be set via the receiver control panel and the *Sensor Studio* configuration software (see chapter 11).

The function reserve can be set via the receiver control panel, via the interface (see chapter 9) or via the *Sensor Studio* configuration software (see chapter 11).

The sensitivity levels (e.g., high function reserve for stable operation, medium function reserve and low function reserve) are configured ex works with “high function reserve for stable operation”. The “low function reserve” configuration enables the detection of partially transparent objects.

The structure of the configuration in the receiver control panel menu is as follows:

Level 0	Level 1	Level 2	Description		
Main Settings					
	Commands		Teach	Reset	Factory settings
	Operational setting				
		Filter depth			
		Beam mode			
		Function reserve	High	Medium	Low

↳ Select **Main Settings > Operational Settings > Function Reserve**

8.5 Extended configurations on the receiver control panel menu

It is not mandatory that extended configurations be performed on the receiver control panel menu in order to start up a light curtain.

8.5.1 Define digital inputs/outputs

The digital IOs, IO pin x configurations (IO function, inversion, area logic, start beam, end beam, etc.) are used to configure the parameters for the switching outputs.

The individual configuration steps for the extended configuration combinations are not described separately.

When configuring start and end beam, you can configure values of up to 1774. Values above 1774 (to 1999) are not accepted and must be entered again.

The structure of these configurations in the receiver control panel menu is as follows (multiple configurations displayed simultaneously):

Examples

Configuration of pin 2 as PNP switching output

The following example shows a configuration of pin 2 as PNP switching output with additional configurations, such as area logic “OR” with a beam area of 1 … 32 and beam 1 as start beam according to the following table.

	OR
Start beam	1
End beam	32
Switch-on condition	1 beam interrupted
Switch-off condition	0 beams interrupted

Level 0	Level 1	Level 2	Description				
Digital IOs							
	IO Logic		**Positive PNP**	Negative NPN			
	IO Pin 2						
		IO Function	Trigger input	Teach input	**Area Output**	Warning output	Trigger output
		Inversion	Normal	**Inverted**			
		Teach height	Execute	Exit			
		Area Logic	AND	**OR**			
		Start Beam	**001**				
		End beam	**032**				

↳ Select **Digital IOs > IO Logic > Positive PNP**.

↳ Select **Digital IOs > IO Pin 2 > IO Function > Area Output**.

↳ Select **Digital IOs > IO Pin 2 > Inversion > Inverted**.

↳ Select **Digital IOs > IO Pin 2 > Area Logic > OR**.

↳ Select **Digital IOs > IO Pin 2 > Start Beam > 001**.

↳ Select **Digital IOs > IO Pin 2 > End Beam > 032**.

Configuration of pin 2 as PNP warning output

The following example shows the configuration of pin 2 as PNP warning output.

Level 0	Level 1	Level 2	Description			
Digital IOs						
	IO Logic		Positive PNP	Negative NPN		
	IO Pin 2					
		IO Function	Trigger input	Teach input	Area output	Warning output
		Inversion	Normal	Inverted		
		Teach height	Execute	Exit		
		Area logic	AND	OR		
		Start beam	(enter value)			
		End beam	(enter value)			

↳ Select **Digital IOs > IO Logic > Positive PNP**.

↳ Select **Digital IOs > IO Pin 2 > IO Function > Warn Out**.

Configuration of pin 2 as PNP trigger input

The following example shows the configuration of pin 2 as PNP trigger input.

Level 0	Level 1	Level 2	Description			
Digital IOs						
	IO Logic		Positive PNP	Negative NPN		
	IO Pin 2					
		IO Function	Trigger input	Teach input	Area output	Warning output
		Inversion	Normal	Inverted		
		Teach height	Execute	Exit		
		Area logic	AND	OR		
		Start beam	(enter value)			
		End beam	(enter value)			

↳ Select **Digital IOs > IO Logic > Positive PNP**.

↳ Select **Digital IOs > IO Pin 2 > IO Function > Trigger In**.

Trigger input and output are only active if cascading (triggered operation) was activated via the configuration interface or process interface.

A teach input is configured according to the same principle.

↳ Select **Digital IOs > IO Logic > Positive PNP**.

↳ Select **Digital IOs > IO Pin 2 > IO Function > Teach input**.

Configuration of pin 5 as PNP height area

The following example shows the configuration of pin 5 as PNP height area.

Level 0	Level 1	Level 2	Description			
Digital IOs						
	IO Logic		Positive PNP	Negative NPN		
	IO Pin 5					
		IO Function	Trigger input	Teach input	Area output	Warning output
		Inversion	Normal	Inverted		

Level 0	Level 1	Level 2	Description	
		Teach height	**Execute**	Exit
		Area logic	AND	OR
		Start beam	(enter value)	
		End beam	(enter value)	

↳ Select **Digital IOs > IO Logic > Positive PNP**.

↳ Select **Digital IOs > IO pin 5 > Teach height > Execute**.

The height area is automatically configured as an area output.

IO Function > Area Out must also be selected.

8.5.2 Inversion of the switching behavior (light/dark switching)

Light/dark switching is configured with this configuration.

For all digital process interfaces, the configuration can also be performed via the interface (see chapter 9) or via the *Sensor Studio* configuration software (see chapter 11).

The following example shows how the switching output is switched from light switching (normal) to dark switching (inverted).
The structure of the configuration in the receiver control panel menu is as follows:

Level 0	Level 1	Level 2	Description			
Digital IOs						
	IO Logic		Positive PNP	Negative NPN		
	IO Pin 2					
		IO Function	Trigger input	Teach input	Area output	Warning output
		Inversion	Normal	**Inverted**		
		Teach height	Execute	Exit		
		Area logic	AND	OR		
		Start beam	(enter value)			
		End beam	(enter value)			

↳ Select **Digital IOs > IO Pin 2 > Inversion > Inverted**.

8.5.3 Defining the filter depth

The filter depth is used to specify that an evaluation of the measurement values occurs only once the beam states are stable over multiple measurement cycles.
Example: with a filter depth of “5”, five measurement cycles must be consistent before an evaluation is performed. For further information, see also the description of interference suppression (see chapter 4.8).

For all digital process interfaces, the configuration can also be performed via the interface (see chapter 9) or via the *Sensor Studio* configuration software (see chapter 11).

When configuring the filter depth, you can enter values of up to 255. Values above 255 (to 299) are not accepted and must be entered again.

The structure of the configuration in the receiver control panel menu is as follows:

Level 0	Level 1	Level 2	Description		
Main Settings					
	Commands		Teach	Reset	Factory settings
	Operational setting				
		Filter Depth	**(enter value)** min = 1 max = 255		

↳ Select **Main Settings > Operational Settings > Filter Depth**.

8.5.4 Defining the display properties

With these configurations for the display, the brightness and a time unit for darkening the display are defined.

Visibility:

- Off: no display; the display remains dark until a button is pressed.
- Dark: text is only slightly visible.
- Normal: text is visible with good contrast.
- Bright: text appears very bright.
- Dynamic: The display darkens gradually over the number of seconds configured under **Time Unit (s)**. During this time span, the display passes through all levels, from bright to off.

After approx. 5 minutes without button actuation, configuration mode is exited and the display changes to the previous mode.

When configuring the **Visibility** in the dark, normal and bright modes, the display is completely inverted after approx. 15 minutes to prevent the LEDs from burning in.

When configuring the **Time Unit (s)**, you can enter values of up to 240 seconds. Values above 240 (to 299) are not accepted and must be entered again.

The structure of these configurations in the receiver control panel menu is as follows:

Level 0	Level 1	Level 2	Description				
Display							
	Language		English	German	French	Italian	Spanish
	Operating mode		Process mode	Alignment			
	Visibility		Off	Dark	Normal	Bright	**Dynamic**
	Time Unit (s)		**(enter value)** min = 1 max = 240				

↳ Select **Display > Visibility**.

↳ Select **Display > Time Unit (s)**.

8.5.5 Changing the language

The system language can be configured with this configuration.
The structure of the configuration in the receiver control panel menu is as follows:

Level 0	Level 1	Level 2	Description				
Display							
	Language		English	**German**	French	Italian	Spanish

↳ Select **Display > Language**.

8.5.6 Product information

With this configuration, you can read out product data (part number, type designation and other production-specific data) of the light curtain.
The structure of the configuration in the receiver control panel menu is as follows:

Level 0	Level 1	Level 2	Description
Information			
	Product name		CSL710-R05-320.A/L-M12
	Product ID		Receiver part no. (e.g., 50119835)
	Serial number		Receiver serial number (e.g., 01436000288)
	Tx.transmitter-ID		Transmitter part no. (e.g., 50119407)
	Tx.transmitter-SN		Transmitter serial no. (e.g., 01436000289)
	FW version		e.g., 01.61
	HW version		e.g., A001
	Kx version		e.g., P01.30e

↳ Select **Information**.

8.5.7 Reset to factory settings

Factory settings can be restored with this configuration.
The structure of this menu item in the receiver control panel menu is as follows:

Level 0	Level 1	Level 2	Description		
Main Settings					
	Commands		Teach	Reset	**Factory Settings**

↳ Select **Main Settings > Command > Factory Settings**.

9 Starting up the CSL 710 with IO-Link interface

The configuration of an IO-Link interface involves the following steps on the receiver control panel and the IO-Link master module of the control-specific configuration software.

The configuration described in the following is not necessary if you only use the switching outputs.

General prerequisites:

- The light curtain has been mounted (see chapter 6) and connected (see chapter 7) correctly.
- The basic configuration has been performed (see chapter 8).

9.1 Defining IO-Link configurations on the receiver control panel

The parameters for the IO-Link interface are configured with the configuration of the bit rate. By changing the bit rate, the light curtain receives a new IO-Link device ID and must be operated with the compatible IO Device Description (IODD).

NOTICE

Changes take effect immediately!

- The changes become effective directly (without restart), but are not automatically stored in non-volatile memory.
- The IODD file is supplied with the device and is available for download at **www.leuze.com**.

Factory settings

- Bit rate (COM2) = 38.4 kbit/s
  The bit rate is configurable
- Process data length (PD length) and process data content are defined as follows (not configurable):
  16 bit PD: vccc cccc aaaa aaaa
  - v: PD validity or status information
  - c: Measurement cycle counter
  - a: Switching state of beam areas 8 … 1

The structure of this configuration in the receiver control panel menu is as follows:

Level 1	Level 2	Description			
Commands		Teach	Reset	Factory settings	Exit
Operational setting	Filter depth	(enter value)			
	Beam mode	Parallel	Diagonal	Crossed-beam	
	Function reserve	High	Medium	Low	
	Blanking teach	Not active	Active		
	Power-Up teach	Not active	Active		
	Smoothing	(enter value)			
IO-Link	**Bit rate**	COM3: 230.4 kbit/s	COM2: 38.4 kbit/s		

- Select **Main Settings > IO-Link > Bit rate**.

The bit rate is configured.

Other possible configuration steps are performed via the *Sensor Studio* configuration software (see chapter 11).

Process mode is configured via the IO-Link master module of the control-specific software.

9.2 Defining configurations via the IO-Link master module of the PLC-specific software

General prerequisites:

- The light curtain has been mounted (see chapter 6) and connected (see chapter 7) correctly.
- The basic configuration has been performed (see chapter 8).
- IO-Link-specific basic configurations have been performed.
  IO-Link bit rate selected

The IO Device Description (IODD) can be used both with connected light curtain for direct configuration or without connected light curtain for creating device configurations.

The IODD files are supplied with the product. The IODD can also be downloaded from the Internet at **www.leuze.com**.

↳ Open the configuration software of the IO-Link master module.

↳ Configure the following parameters:

- Beam mode (parallel-, diagonal-, crossed-beam)
- Blanking settings
- Teach settings

↳ Perform a teach. This is possible via the receiver control panel or the control group in the IO-Link process data (IO-Link object 2).

↳ If necessary, configure additional parameter/process data (see chapter 9.3).

↳ Save the configuration via the control group in the IO-Link process data (IO-Link object 2).

The IO-Link-specific configurations are performed and copied to the device. The device is prepared for process mode.

9.3 Parameter/process data for IO-Link

The parameter data and process data are described in the IO-Link Device Description (IODD) file.

Details on the parameters and on the structure of the process data can be found in the **.html** document, which is contained in the **IODD zip file**.

Sub-index access is not supported.

Overview

Group	Group name
Group 1	System commands (see page 57)
Group 2	CSL 710 status information (see page 57)
Group 3	Device description (see page 57)
Group 4	General configurations (see page 59)
Group 5	Blanking settings (see page 59)
Group 6	Teach settings (see page 61)
Group 7	Digital IO pin N settings (N = 2, 5, 6, 7) (see page 61)
Group 8	Autosplitting (see page 62)
Group 9	Configuration for block evaluation of beam areas (see page 63)
Group 10	Evaluation functions (see page 64)

System commands (group 1)

The system commands trigger a direct action in the device.

Parameter	Index	Sub-index	Data type	Access	Value range	Default	Explanation
System command	2		unsigned 8	WO	128, 130, 162, 163		128: Reset device 130: Factory reset 162: Perform teach 163: Save settings Note: Processing of the Save command takes up to 600 ms. During this time, no other data/telegrams are accepted.

CSL 710 status information (group 2)

The status information consists of operating state information or error messages.

Parameter	Index	Sub-index	Data type	Access	Value range	Default	Explanation
CSL 710i status information	72	0	unsigned 16	RO			Operating state information or error messages

Parameter	Index	Sub-index	Data type	Access	Value range	Default	Explanation
Status of teach event	69	0	unsigned 8	RO	0, 1, 128	0	Status information on teach event 0: Teach successful 1: Teach running 128: Teaching error
Alignment	70	0	record 32 bit, isolated access to sub-index not possible	RO			Information on the signal level of the first and last beam. The value changes depending on the selected function reserve.
Signal level of last beam	70	1 (bit offset = 16)	unsigned 16	RO		0	
Signal level of first beam	70	2 (bit offset = 0)	unsigned 16	RO		0	

Device description (group 3)

The device description specifies the device characteristics, e.g., beam spacing, the number of physical/logical individual beams, the number of cascades (16 individual beams) in the device and the cycle time.

Parameter	Index	Sub-index	Data type	Access	Value range	Default	Explanation
Manufacturer name	16	0	string 32 bytes	RO			Leuze electronic GmbH + Co. KG
Manufacturer text	17	0	string 64 bytes	RO			Leuze electronic - the sensor people
Product name	18	0	string 64 bytes	RO			Receiver type designation
Product ID	19	0	string 20 bytes	RO			Order number of the receiver (8-digit)
Product text	20	0	string 64 bytes	RO			“Switching Light Curtain CSL 710”
Serial number Receiver	21	0	string 16 bytes	RO			Serial number of the receiver for unique product identification
Hardware version	22	0	string 20 bytes	RO			
Firmware version	23	0	string 20 bytes	RO			
User-specific name	24	0	string 32 bytes	RW		***	Device designation defined by the user
Device status	36	0	unsigned 8	R	0 … 4		Value: 0 device is OK Value: 1 maintenance required Value: 2 outside of specifications Value: 3 function test Value: 4 error
Receiver part no.	64	0	string 20 bytes	RO			Order number of the receiver (8-digit)
Transmitter product designation	65	0	string 64 bytes	RO			Type designation
Transmitter part no.	66	0	string 20 bytes	RO			Order number of the transmitter (8-digit)
Transmitter serial number	67	0	string 16 bytes	RO			Transmitter serial number for unique product identification
Device characteristics	68	0	record 80 bit, isolated access to sub-index not possible	RO			The device characteristics specify the beam spacing, the number of physical/logical individual beams, the number of cascades (16 individual beams) in the device and the cycle time.
Beam spacing	68	1 (bit offset = 64)	unsigned 16	RO	5, 10, 20, 40	5	Distance between two adjacent optical individual beams.
Number of physical individual beams	68	2 (bit offset = 48)	unsigned 16	RO		16	
Number of configured logical individual beams	68	3 (bit offset = 32)	unsigned 16	RO		16	The number of logical individual beams is dependent on the selected operating mode. The evaluation functions of the light curtain are calculated on the basis of the logical individual beams.
Number of optical cascades	68	4 (bit offset = 16)	unsigned 16	RO		1	The light curtain is modular. 16 individual beams are always grouped into a cascade.
Device cycle time	68	5 (bit offset = 0)	unsigned 16	RO		1000	The device cycle time defines the duration of a measurement cycle of the light curtain.

General configurations (group 4)

The type of scanning (parallel/diagonal/crossed beam), the minimum object diameter for evaluation (smoothing), and filter depth and button lock on the receiver control panel are configured under group 4 “General configurations”.

Parameter	Index	Sub-index	Data type	Access	Value range	Default	Explanation
General settings	71	0	record 32 bit, isolated access to sub-index not possible	RW			
Beam mode	71	1 (bit offset = 24)	unsigned 8	RW	0 … 2	0	0: Parallel-beam scanning 1: Diagonal-beam scanning 2: Crossed-beam scanning
Smoothing	71	3 (bit offset = 8)	unsigned 8	RW	1 … 255	1	Smoothing: Less than i interrupted beams are ignored.
Filter depth	74	2 (bit offset = 16)	unsigned 8	RW	1 … 255	1	The filter depth indicates the necessary number of consistent beam states before the evaluation of the measurement values. The filter depth corresponds to the number of passes with interrupted beam so that the result leads to switching.
Switching level of the inputs/outputs	77	0	unsigned 8	RW	0 … 1	1	0: Transistor, NPN 1: Transistor, PNP
Button lock and display	78	0	unsigned 8	RW	0 … 1	0	Lock operational controls on the device. 0: Enabled 1: Locked

Blanking settings (group 5)

Up to four beam areas can be deactivated. Deactivated beams can be assigned the logical values 0, 1 or the value of the adjacent beam. With auto blanking activated, up to four beam areas are automatically suppressed during teaching.

Activate auto blanking only during commissioning of the device to suppress distracting objects. Deactivate auto blanking in process mode.

For details on this topic see chapter 10.3.

NOTICE

Perform teach after changing the blanking configuration!

↳ Perform a teach after changing the blanking configuration.

A teach can be performed via the receiver control panel or via the teach command.

Parameter	Index	Sub-index	Data type	Access	Value range	Default	Explanation
Blanking settings	73	0	record 208 bit, isolated access to sub-index not possible	RW			
Number of auto-blanking areas	73	1 (bit offset = 200)	unsigned 8	RW	0 … 4	0	Permissible number of auto-blanking areas 0: 0 auto-blanking areas 1: 1 auto-blanking area 2: 2 auto-blanking areas 3: 3 auto-blanking areas 4: 4 auto-blanking areas
Auto blanking (during teaching)	73	2 (bit offset = 192)	unsigned 8	RW	0 … 1	0	0: Not active (manual blanking area configuration) 1: Active (automatic area configuration through teach)
Logical value for blanking area 1	73	3 (bit offset = 176)	unsigned 16	RW	0 … 4	0	0: No beams blanked 1: Logical value 0 for blanked beams 2: Logical value 1 for blanked beams 3: Logical value = same as adjacent beam with lower beam number 4: Logical value = same as adjacent beam with higher beam number
Start beam of blanking area 1	73	4 (bit offset = 160)	unsigned 16	RW	1 … 1774	1	
End beam of blanking area 1	73	5 (bit offset = 160)	unsigned 16	RW	1 … 1774	1	
Logical value for blanking area 2	73	6 (bit offset = 128)	unsigned 16	RW	0 … 4	0	0: No beams blanked 1: Logical value 0 for blanked beams 2: Logical value 1 for blanked beams 3: Logical value = same as adjacent beam with lower beam number 4: Logical value = same as adjacent beam with higher beam number
Start beam of blanking area 2	73	7 (bit offset = 112)	unsigned 16	RW	1 … 1774	1	
End beam of blanking area 2	73	8 (bit offset = 96)	unsigned 16	RW	1 … 1774	1	
.....	....		....	..	..	..	.....
.....	....		....	..	..	..	.....
Logical value for blanking area 4	73	12 (bit offset = 32)	unsigned 16	RW	0 … 4	0	0: No beams blanked 1: Logical value 0 for blanked beams 2: Logical value 1 for blanked beams 3: Logical value = same as adjacent beam with lower beam number 4: Logical value = same as adjacent beam with higher beam number
Start beam of blanking area 4	73	13 (bit offset = 16)	unsigned 16	RW	1 … 1774	1	
End beam of blanking area 4	73	14 (bit offset = 0)	unsigned 16	RW	1 … 1774	1	

Teach settings (group 6)

In most applications, it is recommended that teach values be stored in non-volatile memory (remanent).

Depending on the function reserve selected for the teach event, the sensitivity is higher or lower (high function reserve = low sensitivity; low function reserve = high sensitivity).

Parameter	Index	Sub-index	Data type	Access	Value range	Default	Explanation
Teach settings	74	0	record 32 bit, isolated access to sub-index not possible	RW			
Type of storage for teach values	74	1 (bit offset = 16)	unsigned 8	RW	0 … 1	0	0: Non-volatile storage of teach values 1: Teach values stored only while voltage is ON
Sensitivity adjustment for teach event	74	2 (bit offset = 8)	unsigned 8	RW	0 … 2	0	Sensitivity of the measurement system: 0: High function reserve (for stable operation) 1: Medium function reserve 2: Low function reserve
Power-Up Teach	74	3 (bit offset = 0)	unsigned 8	RW	0 … 1	0	0: Deactivated 1: Activated - teach when applying operating voltage

Digital IO pin N settings (N = 2, 5, 6, 7) (group 7)

In this group, the inputs/outputs can be set to positive switching (PNP) or to negative switching (NPN). The switching behavior applies the same for all inputs/outputs.

The inputs/outputs can be configured via this group: pin 2, pin 5, pin 6, pin 7.

In this group, the beam areas can be mapped to the switching outputs and assigned a time function.

Parameter	Index	Sub-index	Data type	Access	Value range	Default	Explanation
Configuration of pin 2							
Digital IO Pin 2 Settings	80	0	record 32 bit, isolated access to sub-index not possible	RW			
Switching behavior	80	1 (bit offset = 16)	unsigned 8	RW	0 … 1	0	0: Normal - light switching 1: Inverted - dark switching
IO Function	80	2 (bit offset = 8)	unsigned 8	RW	0 … 4	2	0: Not active 1: Trigger input 2: Teach input 3: Switching output (area 1 … 8) 4: Warning output
Operating mode of the time module	80	1 (bit offset = 48)	unsigned 8	RW	0 … 4	0	0: Not active 1: Start-up delay 2: Switch-off delay 3: Pulse stretching 4: Pulse suppression
Time constant for selected function	80	2 (bit offset = 32)	unsigned 8	RW	0 … 65,000	0	Unit: ms

Parameter	Index	Sub-index	Data type	Access	Value range	Default	Explanation
Area mapping 8 … 1	80	6 (bit offset = 0)	unsigned 8	RW		0b000 00001	
.....	....		....	..	..	..	.....
Configuration of pin 7							
Digital IO Pin 7 Settings	83	0	record 32 bit, isolated access to sub-index not possible	RW			
Switching behavior	83	2 (bit offset = 16)	unsigned 8	RW	0 … 1	0	0: Normal - light switching 1: Inverted - dark switching
IO Function	83	2 (bit offset = 8)	unsigned 8	RW	0 … 4	4	0: Not active 1: Trigger input 2: Teach input 3: Switching output (area 1 … 8) 4: Warning output
Operating mode of the time module	83	1 (bit offset = 48)	unsigned 8	RW	0 … 4	0	0: Not active 1: Start-up delay 2: Switch-off delay 3: Pulse stretching 4: Pulse suppression
Time constant for selected function	83	2 (bit offset = 32)	unsigned 16	RW	0 … 65,000	8	Unit: ms
Area mapping 8 … 1	83	6 (bit offset = 0)	unsigned 8	RW		0b000 00001	

Autosplitting (group 8)

In this group, it is possible to split all logical beams into areas of identical size. The fields of areas 1 … 8 are thereby automatically configured.

Parameter	Index	Sub-index	Data type	Access	Value range	Default	Explanation
Automatic splitting	76	0	unsigned 16	RW	1 … 8 **1: (active: all beams free - not active: = one beam interrupted)** 257 … 264 **2: (active: one beam free - not active: = all beams interrupted)**	**1: (active: all beams free - not active: = one beam interrupted)**	Splitting of all logical beams into areas of identical size according to the number of areas set under “Number of areas”. The fields of areas 1 … 8 are thereby automatically configured. **1: (active: all beams free – not active: ≥ one beam interrupted)** 1: One area … 8: Eight areas **2: (active: one beam free – not active: = all beams interrupted)** 257: One area … 264: Eight areas
Evaluation of the beams in the area	76	1 (bit offset = 8)	unsigned 8	RW	0 … 1	0	0: OR combination 1: AND combination
Number of areas (evenly split)	76	2 (bit offset = 0)	unsigned 8	RW	1 … 8	1	

Configuration for block evaluation of beam areas (group 9)

In this group, a detailed area configuration can be displayed and a beam area configured for the block evaluation.

Parameter	Index	Sub-index	Data type	Access	Value range	Default	Explanation
Teach height area	75	0	unsigned 8	RW	0 … 7	0	Active: all beams free Not active: at least one beam interrupted 1: Area 1 … 8: Area 8
Display detailed area configuration	77	0	unsigned 8	WO	1 … 8		Select the desired area (1 … 8) for which the configuration is to be edited in detail. 0: Area 01 1: Area 02 2: Area 03 … 7: Area 08
Configuration of area 1							
Configuration of area 01	90	1	record 112 bit, isolated access to sub-index not possible	RW			Configuration of the area: definition of the status conditions so that the area takes on a logical 1 or 0. For diagonal- or crossed-beam mode, the numbers of the logical beams are to be entered.
Area	90	1 (bit offset = 104)	unsigned 8	RW	0 … 1	0	0: Not active 1: Active
Active beam	90	1 (bit offset = 96)	unsigned 8	RW	0 … 1	0	0: Light switching (beam is active if light path is free) 1: Dark switching (beam is active if light path is interrupted)
Start beam of the area	90	1 (bit offset = 80)	unsigned 8	RW	1 … 1774	1	
End beam of the area	90	1 (bit offset = 64)	unsigned 8	RW	1 … 1774	1	
Number of active beams for area ON	90	1 (bit offset = 48)	unsigned 16	RW	0 … 1774	0	
Number of active beams for area OFF	90	1 (bit offset = 32)	unsigned 16	RW	0 … 1774	0	
.....	....		....	..	..	..	.....
.....	....		....	..	..	..	.....
Configuration of area 08							
Configuration of area 08	97	8	record 112 bit, isolated access to sub-index not possible	RW			Configuration of the area: definition of the status conditions so that the area takes on a logical 1 or 0. For diagonal- or crossed-beam mode, the numbers of the logical beams are to be entered.
Area	97	8 (bit offset = 104)	unsigned 8	RW	0 … 1	0	0: Not active 1: Active
Active beam	97	8 (bit offset = 96)	unsigned 8	RW	0 … 1	0	0: Light switching (beam is active if light path is free) 1: Dark switching (beam is active if light path is interrupted)

Parameter	Index	Sub-index	Data type	Access	Value range	Default	Explanation
Start beam of the area	97	8 (bit offset = 80)	unsigned 8	RW	1 … 1774	1	
End beam of the area	97	8 (bit offset = 64)	unsigned 16	RW	1 … 1774	1	
Number of active beams for area ON	97	8 (bit offset = 48)	unsigned 16	RW	1 … 1774	0	
Number of active beams for area OFF	97	8 (bit offset = 32)	unsigned 16	RW	1 … 1774	0	

Evaluation functions (group 10)

In this group, all evaluation functions can be configured.

The beam-stream values are updated in 1-second cycles.

Parameter	Index	Sub-index	Data type	Access	Value range	Default	Explanation
Evaluation function	40	0	unsigned 16	RO			16 bit process data (PD): vccc cccc aaaa aaaa v: PD validity or status information c: Measurement cycle counter a: Switching state of areas 8 … 1
Beam-stream	100	0	array	RO			8 bytes Bit N = 0: beam (N-1) assigned Bit N = 1: beam (N-1) free
Beam-stream	101	0	array	RO			16 bytes
Beam-stream	102	0	array	RO			32 bytes
Beam-stream	103	0	array	RO			64 bytes
Beam-stream	104	0	array	RO			128 bytes
Beam-stream	105	0	array	RO			222 bytes
Beam-stream mask	106	0	array	RO			222 bytes Bit N = 0: beam (N-1) is suppressed Bit N = 1: beam (N-1) is active

10 Example configurations

10.1 Example configuration - Mapping of beams 1 … 32 to output pin 2

10.1.1 Configuration of area/output mapping (general)

The following table shows an example configuration for an area mapping to an output. In this example, beams 1 … 32 are to be applied to output pin 2 on interface X1.

↳ Map beams 1 … 32 to area 01.

Description / variables				
Display detailed area configuration Value: 0 = area 01				
Configuration of area 01				
Area Value: 1 = active				
Logical behavior of the area	Value: 0 Normal - light switching (i.e., switching if beams are free)	Value: 1 Inverted - dark switching (i.e., switching if beams are interrupted)	Value: 0 Normal - light switching	Value: 1 Inverted - dark switching
Start beam of the area Value:	1	1	1	1
End beam of the area Value:	32	32	32	32
Number of active beams for area ON Value:	32	32	1	1
Number of active beams for area OFF Value:	31	31	0	0
Switching behavior Value: 0 = normal - light switching (i.e., switching if beams are free)	Output 1 if all beams are free. Output 0 if a beam is interrupted or if more than a beam are interrupted.	Output 0 if all beams are free or 1 … 31 beams are free. Output 1 only if 32 beams are interrupted.	Output 1 if all beams are free or as long as 1 … 31 beams are free. Output 0 if 32 beams are interrupted.	Output 0 if all beams are free. Output 1 as soon as a beam is interrupted.
Switching behavior Value: 1 = inverted - dark switching (i.e., switching if beams are interrupted)	Output 0 if all beams are free. Output 1 if one or more beams are interrupted. OR function	Output 1 if all beams are free or 1 … 31 beams are free. Output 0 only if 32 beams are interrupted. AND function	Output 0 if all beams are free or as long as 1 … 31 beams are free. Output 1 if 32 beams are interrupted.	Output 1 if all beams are free. Output 0 as soon as a beam is interrupted.

↳ Configure pin 2 as area output.

Description / variables		
Configuration of digital inputs/outputs		
IO Function	Value: 3 = Area output (area 1 … 8)	The area output signals the logical states of beam areas 1 … 8

↳ Map pin 2 to configured area 1.

Digital Output 2 Settings		
Area mapping 8 … 1 (OR combination)	0b00000001	Every area is displayed as a bit.

Possible additional area-to-pin configurations:

↳ Map pin 2 to configured area 8.

Digital Output 2 Settings	
Area mapping 8 … 1 (OR combination)	0b10000000

↳ Map the configured areas 1 and 8 (OR-linked) to the corresponding switching output.

Digital Output 2 Settings	
Area mapping 8 … 1 (OR combination)	0b10000001

10.2 Example configuration – Teach height area

The following tables show an example configuration for teaching two height areas and the assignment of two outputs.

- Height area 01 is to be applied to output pin 2 of interface X1.
- Height area 02 is to be applied to output pin 5 of interface X1.

↳ Teach height area 1.

A height area is automatically defined using an object.

When teaching a height area, all free beams are combined into one height area.

To define the entire beam area as a height area, a height area is taught without an object.

Description / variables		
Configuration of beams in areas		
Teach height area	Value: area 1 Active: all beams free Not active: one beam interrupted	All free beams are configured as area 1.

↳ Configure pin 2 as area output.

Description / variables		
Configuration of digital inputs/outputs		
IO Function	Value: 3 = Area output (area 1 … 8)	The area output signals the logical states of beam areas 1 … 8.

↳ Map pin 2 to configured height area 1.

Description / variables		
Configuration of pin 2		
Area mapping 8 … 1 (OR combination)	0b00000001	Every area is displayed as a bit.

↳ Teach height area 2.

Description / variables		
Configuration of beams in areas		
Teach height	Value: area 2 Active: all beams free Not active: one beam interrupted	All free beams are configured as area 2.

↳ Configure pin 5 as area output.

Description / variables		
Configuration of digital inputs/outputs		
IO Function	Value: 3 = Area output (area 1 … 8)	The area output signals the logical states of beam areas 1 … 8

↳ Map pin 5 to configured height area 2.

Description / variables		
Configuration of pin 5		
Area mapping 8 … 1 (OR combination)	0b00000010	

10.3 Example configuration - Activating and deactivating blanking areas

10.3.1 Configuration of blanking areas (general)

↳ Perform the following settings to activate or deactivate blanking areas.

Example: automatic blanking of two areas during teaching

Blanking settings	Parameter *Number of auto blanking areas*:	= 2	Two blanking areas permitted
	Parameter *Auto blanking (during teaching)*:	= 1	Automatic blanking-area configuration active
System commands	Parameter *Teach command*:	= 1	Execute teach command

Example: Deactivation/resetting of auto blanking

Blanking settings	Parameter *Number of auto blanking areas*:	= 0	No blanking areas permitted
	Parameter *Auto blanking (during teaching)*:	= 0	Automatic blanking area configuration not active

Blanking settings	Parameter *Function for blanking area/logical value for blanking area 1*:	= 0	No beams blanked
	Parameter Function for blanking area/logical value for blanking area 2:	= 0	No beams blanked
System commands	Parameter *Teach command*:	= 1	Execute teach command

10.4 Example configuration – smoothing

10.4.1 Smoothing configuration (general)

↳ Make the following settings for smoothing.

Example: Smoothing of four interrupted beams

Smoothing settings	Parameter *Smoothing — less than i interrupted beams are ignored*:	= 4	Beams are taken into account in the evaluation once there are four or more interrupted beams

(see table 16.8
(see table 16.9

11 Connecting to a PC – *Sensor Studio*

The *Sensor Studio* configuration software – in combination with an IO-Link USB master – provides a graphical user interface for the operation, configuration and diagnosis of sensors with IO-Link configuration interface (IO-Link devices), independent of the selected process interface.

Each IO-Link device is described by a corresponding IO Device Description (IODD file). After importing the IODD file into the configuration software, the IO-Link device connected to the IO-Link USB master can be operated, configured and checked – conveniently and in multiple languages. An IO-Link device that is not connected to the PC can be configured offline.

Configurations can be saved and reopened as projects for transferring back to the IO-Link device at a later time.

Only use the *Sensor Studio* configuration software for products manufactured by **Leuze electronic.**

The *Sensor Studio* configuration software is offered in the following languages: German, English, French, Italian and Spanish.

The FDT frame application of the *Sensor Studio* supports all languages; all languages may not be supported in the IO-Link device DTM (Device Type Manager).

The *Sensor Studio* configuration software is designed according to the FDT/DTM concept:

- Make individual configuration settings for the light curtain in the Device Type Manager (DTM).
- The individual DTM configurations of a project can be called up via the frame application of the Field Device Tool (FDT).
- Communication DTM: IO-Link USB master
- Device DTM: IO-Link device/IODD for CSL 710

NOTICE
Configuration changes only via the control!
↳ **Always** perform the configuration for process mode via the control and, if applicable, the interface.
In process mode, only the configuration conveyed via the control is active. The configuration changes made via *Sensor Studio* are only active in process mode if they were previously transmitted 1:1 to the control.

Procedure for the installation of the software and hardware:

↳ Install the *Sensor Studio* configuration software on the PC.

↳ Install the driver for the IO-Link USB master on the PC.

↳ Connect the IO-Link USB master to the PC.

↳ Connect the CSL 710 (IO-Link device) to the IO-Link USB master.

↳ Install IO-Link device DTM with IODD file for CSL 710 in the *Sensor Studio* FDT frame.

11.1 System requirements

To use the *Sensor Studio* configuration software, you need a PC or laptop with the following specifications:

Table 11.1: *System requirements for Sensor Studio* installation

Operating system	Windows 7 Windows 8

Computer	• Processor type: 1 GHz or higher
	• USB interface
	• CD-ROM drive
	• Main memory
	  • 1 GB RAM (32-bit operating system)
	  • 2 GB RAM (64-bit operating system)
	• Keyboard and mouse or touchpad

Graphics card	DirectX 9 graphic device with WDDM 1.0 or higher driver
Additionally required capacity for *Sensor Studio* and IO-Link device DTM	350 MB hard drive memory 64 MB main memory

Administrator privileges on the PC are necessary for installing *Sensor Studio*.

11.2 Installing *Sensor Studio* configuration software and IO-Link USB master

The installation of the *Sensor Studio* configuration software is done via supplied data carrier **Sensor Studio & IO-Link USB master**.

For subsequent updates, you can find the most recent version of the *Sensor Studio* configuration software on the Internet at **www.leuze.com**

11.2.1 Installing the *Sensor Studio* FDT frame

NOTICE
First install the software! ↳ Do not yet connect the IO-Link USB master to the PC. First install the software.

If FDT frame software is already installed on your PC, you do not need the *Sensor Studio* installation.

You can install the communication DTM (IO-Link USB master) and the device DTM (IO-Link device CSL 710) in the existing FDT frame.

↳ Start the PC and insert the **Sensor Studio & IO-Link USB Master** data carrier.

The language selection menu starts automatically.
If the language selection menu does not start automatically, double-click the *start.exe* file.

↳ Select a language for the interface text in the Installation Wizard and software.

The installation options are displayed.

↳ Select **Leuze electronic Sensor Studio** and follow the instructions on the screen.

The Installation Wizard installs the software and places a shortcut on the desktop ( ).

11.2.2 Installing drivers for IO-Link USB master

↳ Select the **IO-Link USB Master** installation option and follow the instruction on the screen.

The Installation Wizard installs the software and places a shortcut on the desktop ( ).

11.2.3 Connecting IO-Link USB master to the PC

The light curtain is connected to the PC via the IO-Link USB master (see table 16.8).

↳ Connect the IO-Link USB master to the plug-in power supply unit or the mains supply.

Included in the delivery contents of the IO-Link USB master is a USB interconnection cable for connecting the PC to the IO-Link USB master as well as a plug-in power supply unit and a short description.

The mains supply of the IO-Link USB master via the plug-in power supply unit is only activated if IO-Link USB master and PC are connected via the USB interconnection cable.

↳ Connect the PC to the IO-Link USB master.

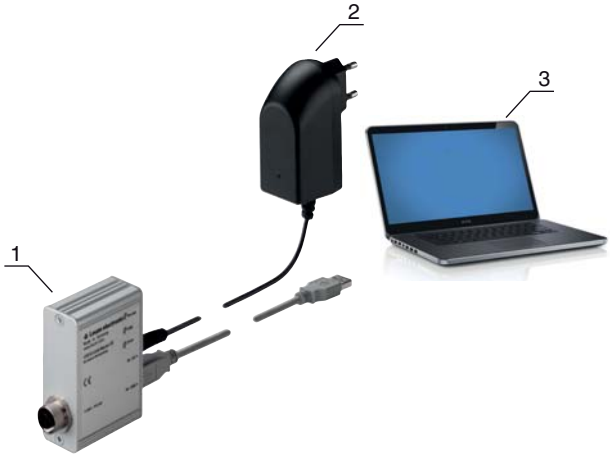

1 IO-Link USB master
2 Plug-in power supply unit
3 PC

Figure 11.1: PC connection via the IO-Link USB master

↳ The **wizard for searching for new hardware** starts and installs the driver for the IO-Link USB master on the PC.

11.2.4 Connect the IO-Link USB master to the light curtain

Prerequisites:

- IO-Link USB master and PC are connected via the USB interconnection cable.
- IO-Link USB master is connected to the mains supply with the plug-in power supply unit.

NOTICE
Connect the plug-in power supply unit for IO-Link USB master! ↳ To connect a light curtain, the plug-in power supply unit must be connected to the IO-Link USB master and the mains supply. The voltage supply via the USB interface of the PC is permissible only for IO-devices with a current consumption of up to 40 mA at 24 V.

Included in the delivery contents of the IO-Link USB master is a USB interconnection cable for connecting the PC to the IO-Link USB master as well as a plug-in power supply unit and a short description.

The voltage supply of the IO-Link USB master and the light curtain via the plug-in power supply unit is only activated if IO-Link USB master and PC are connected via the USB interconnection cable.

↳ Connect the IO-Link USB master to the receiver.

↳ CSL 710 with IO-Link interface:

Connect the IO-Link USB master to interface X1 on the receiver with the connection cable (see figure 0.1).

Connect the IO-Link USB master to interface X1 on the receiver with the connection cable (see figure 11.2).

The connection cable is not included in the delivery contents and must be ordered separately if needed (see chapter 16.4).

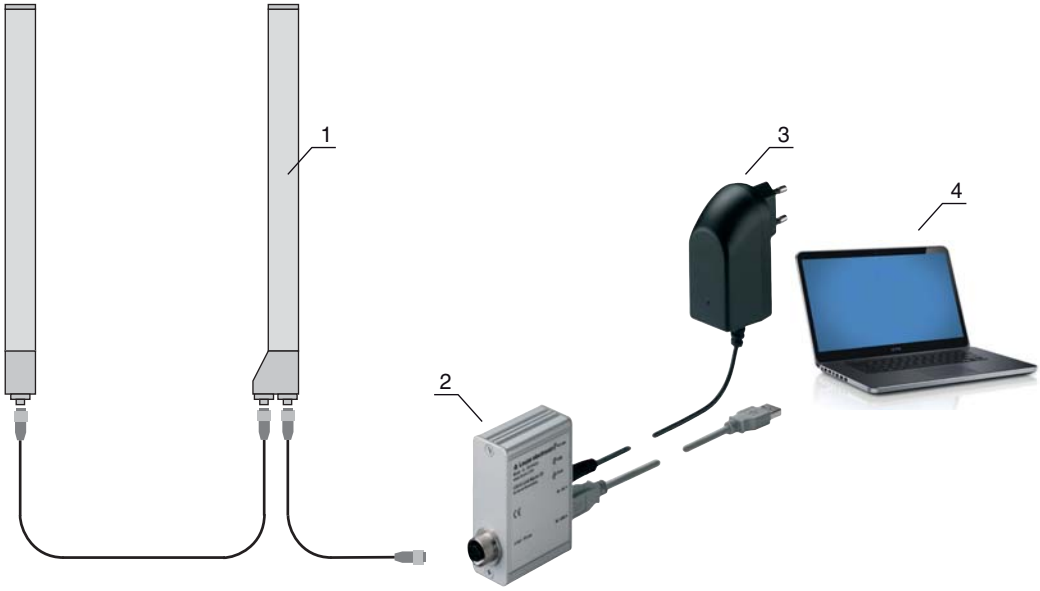

1 Receiver
2 IO-Link USB master
3 Plug-in power supply unit
4 PC

Figure 11.2: CSL 710 connection to the IO-Link USB master

11.2.5 Installing the DTM and IODD

Prerequisites:

- The light curtain is connected to the PC via the IO-Link USB master.
- FDT frame and driver for IO-Link USB master are installed on the PC.

↳ Select the **IO-Link device DTM (User Interface)** installation option and follow the instructions on the screen.

The Installation Wizard installs the DTM and the IO Device Description (IODD) for the light curtain.

DTM and IODD for all IO-Link devices currently available from Leuze electronic are installed.

11.3 Starting the *Sensor Studio* configuration software

Prerequisites:

- The light curtain has been mounted (see chapter 6) and connected (see chapter 7) correctly.
- The *Sensor Studio* configuration software is installed on the PC (see chapter 11.2 "Installing Sensor Studio configuration software and IO-Link USB master").
- The light curtain is connected to the PC via the IO-Link USB master (see chapter 11.2 "Installing Sensor Studio configuration software and IO-Link USB master").

↳ Start the *Sensor Studio* configuration software by double-clicking the *Sensor Studio* icon ( ).

The **Mode selection** of the Project Wizard is displayed automatically or under the **File** menu item.

↳ Select the **Device selection without communication connection (offline)** configuration mode and click on [Next].

The **Project Wizard** displays the **device selection** list of the configurable devices.

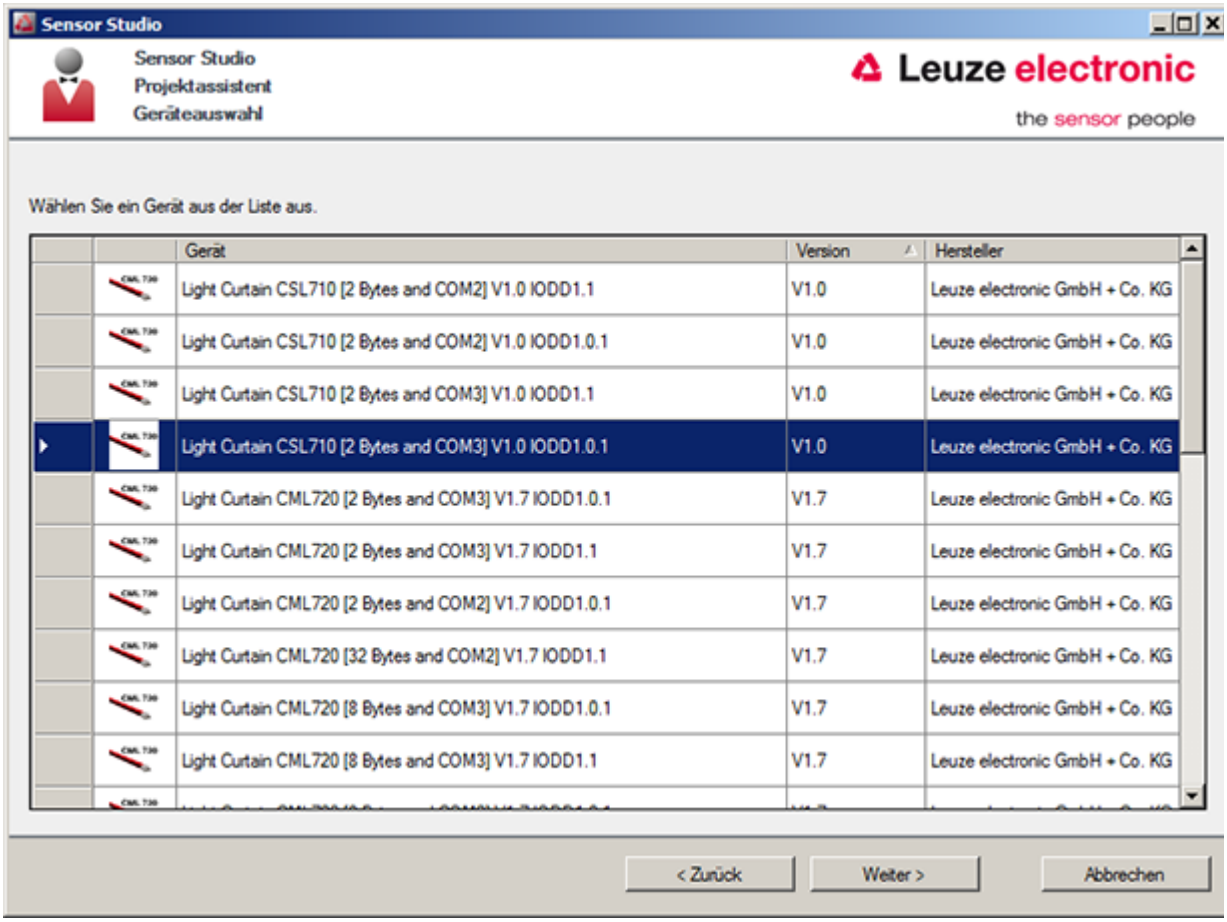

Figure 11.3: Device selection for CSL 710i switching light curtain

↳ Select the connected light curtain according to the configuration in the **device selection** and click on [Next].

The **device** description in the **device selection** list contains the value for the bit rate configuration parameter for the respective light curtain. Factory setting on delivery: COM2

The device manager (DTM) of the connected light curtain starts with the offline view for the *Sensor Studio* configuration project.

↳ Establish the online connection to the connected light curtain.

In the *Sensor Studio* FDT frame, click on the [Establish connection with device] button ( ).

In the *Sensor Studio* FDT frame, click on the [Online parameters] button ( ).

The IO-Link USB master synchronizes with the connected light curtain and the current configuration data and process data are displayed in the device manager (DTM).

↳ The menus of the *Sensor Studio* device manager (DTM) can be used to change or read out the configuration of the connected light curtain.

The user interface of the *Sensor Studio* device manager (DTM) is largely self-explanatory.

The online help system provides information on the menu items and adjustment parameters. Select the **Help** menu item in the menu [?].

Error message when [establishing connection with the device]

If the device selected in the **device selection** list of the *Sensor Studio* Project Wizard does not match the configuration (bit rate) of the connected light curtain, an error message is displayed.

Under **IDENTIFICATION > CxL-7XX Device IDs**, you will find a list with the assignment of the device IDs displayed in the error message to the **device** description in the **device selection** list.

↳ Change the device selection in the **device selection** list according to the configuration (bit rate) of the connected light curtain.

Alternatively, you can set the configuration (bit rate) of the light curtain in the receiver control panel corresponding to the device selection in the **Device selection** list.

↳ In the *Sensor Studio* FDT frame, click on the [Establish connection with device] button ( ).

11.4 Short description of the *Sensor Studio* configuration software

This chapter contains information and explanations on the individual menu items and adjustment parameters of the *Sensor Studio* configuration software and the device manager (DTM) for CSL 710 switching light curtains.

This chapter does not include a complete description of the *Sensor Studio* configuration software.

Complete information on the FDT frame menu and on the functions in the device manager (DTM) can be found in the online help system.

The device managers (DTM) for light curtains of the *Sensor Studio* configuration software have the following main menus and functions:

- *IDENTIFICATION* (see chapter 11.4.2)
- *CONFIGURATION* (see chapter 11.4.3)
- *PROCESS* (see chapter 11.4.4)
- *DIAGNOSIS* (see chapter 11.4.5)

The online help system displays information on the menu items and adjustment parameters for each function. Select the **Help** menu item in the menu [?]

11.4.1 FDT frame menu

You can find complete information on the FDT frame menu in the online help system. Select the **Help** menu item in the menu [?].

11.4.2 *IDENTIFICATION* function

- *Operating information*: Information on operating the device manager (DTM)
- *Technical description*: The available original operating instructions of the device in pdf format
- *CSL-7XX*: Table with the assignment of device IDs to the **device** description in the **device selection** list in the *Sensor Studio* Project Wizard.
  The information is needed if an error message is displayed when connecting with the device.

11.4.3 *CONFIGURATION* function

- *Save permanently*: Configuration changes via *Sensor Studio* are effective immediately but are lost if the device is de-energized.
  With *Save permanently*, the configuration set via *Sensor Studio* is stored in non-volatile memory in the device.

NOTICE
Configuration for process mode only via the control!
↳ **Always** perform the configuration for process mode via the control and, if applicable, the interface.
In process mode, only the configuration conveyed via the control is active. The configuration changes made via *Sensor Studio* are only active in process mode if they were previously transmitted 1:1 to the control.

- *Teach*: The sensitivity of the teach event (see chapter 8.2 "Teaching the environmental conditions") can only be set via the *Sensor Studio* configuration software.
- *Upload device data set from device* ( ): The configuration is uploaded from the device to the device manager (DTM), e.g., to update the online view in *Sensor Studio* after the configuration was changed via the receiver control panel.
- *Upload device data set from device* ( ) / *Synchronize with device* ( ):
  - If the [Upload device data set from device] button ( ) is displayed in the device manager (DTM), the *Sensor Studio* display shows the current configuration of the light curtain.
  - If the [Synchronize with device] button ( ) is displayed in the device manager (DTM), the *Sensor Studio* display is not consistent with the current configuration of the light curtain.
    If parameters are changed in the device manager (DTM) that affect other parameters (e.g., if changing the beam mode causes the configured logical beams to change), the changes to these parameters are configured in the device – but are not yet displayed in the *Sensor Studio* display.
    Click on the [Synchronize with device] button ( ) to synchronize the *Sensor Studio* display with the current configuration of the light curtain. Following successful synchronization, the [Upload device data set from device] button ( ) is displayed in the device manager (DTM).

11.4.4 *PROCESS* function

- The *Process* function offers graphical visualizations of the process data of the connected light curtain.
- [Cyclical refresh] button ( ): Starts the cyclical acquisition of the process data, which are graphically depicted under *Numerical display*, *Beam-stream display* and Areas and outputs. Each graphical display covers up to 300 seconds.
- *Beam-stream display*: Using the [Show or hide the graphical cursor] button ( ), you can move the graphical cursor in the visualization, e.g., to evaluate the time difference between two events.

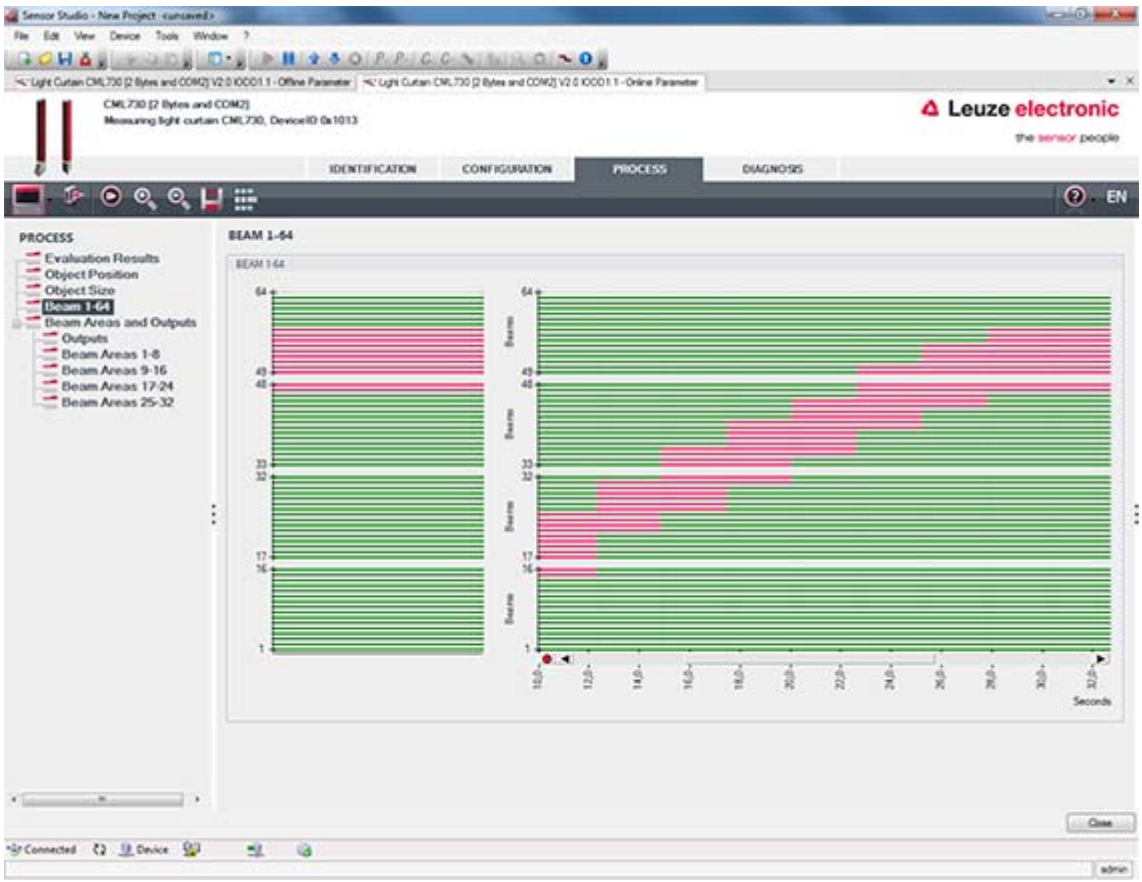

Figure 11.4: Graphical visualization: Beam-stream display

11.4.5 *DIAGNOSIS* function

The *DIAGNOSIS* function offers the following commands.

- Reset device, i.e., restart the connected light curtain
- Store configuration in non-volatile memory (see chapter 11.4.3)

11.4.6 Exiting *Sensor Studio*

After completing the configuration settings, close the *Sensor Studio* configuration software

↳ Exit the program via **File > Exit**.

↳ Save the configuration settings as a configuration project on the PC.

You can open the configuration project again at later time via **File > Open** or via the *Sensor Studio* **Project Wizard** ( ).

12 Troubleshooting

12.1 What to do in case of failure?

After switching on the light curtain, display elements (see chapter 3.4) assist in checking the proper function and troubleshooting.

In case of error, you can determine the error from the LED displays. With the error message you can determine the cause of the error and initiate measures to rectify it.

NOTICE
If the light curtain responds with an error display, you will often be able to eliminate the cause yourself! ↳ Switch off the system and leave it switched off. ↳ Analyze and eliminate the cause of the fault using the following table. ↳ If you are unable to rectify the fault, contact the Leuze electronic branch responsible for you or call the Leuze electronic customer service (see chapter 14 "Service and support").

12.2 Operating indicators of the LEDs

Table 12.1: Receiver LED displays - state and causes

LED green	LED yellow	State	Possible cause
ON (continuous light)	-	Sensor ready	
OFF	OFF	Sensor not ready	Interruption of the operating voltage; Light curtain in start-up phase
OFF	Flashing (15 Hz)	Missing function reserve	Soiling of the lens covers Misalignment of transmitter or receiver Operating range exceeded
Flashing synchronously (3 Hz)		Teach running	
Flashing synchronously (9 Hz)		Teach error	Soiling of the lens covers Operating range exceeded
Flashing alternately (9 Hz)		System error	No connection between transmitter and receiver Operating voltage too low Receiver is not compatible with the transmitter

Table 12.2: LED displays - causes and measures

Error	Possible cause	Measure
Teach error	Soiling of the lens covers Poor alignment of transmitter and receiver	Clean the lens cover on the receiver and on the transmitter. Check alignment.
Function reserve too low	Poor alignment of transmitter and receiver Soiling of the lens covers	Adjust alignment. Test with shorter distance between transmitter and receiver. Clean the lens cover on the receiver and on the transmitter.
Alignment signal too low	Poor alignment of transmitter and receiver Soiling of the lens covers	Adjust alignment. Test with shorter distance between transmitter and receiver. Clean the lens cover on the receiver and on the transmitter.
Outputs are not active or change their state without a contour change in the measurement field	Configuration data is read or written	End configuration communication.

During teaching, the system checks whether the signals of all beams are within a certain corridor. If there are considerable deviations in the signal strength, this results in a teaching error and is indicated on the LEDs. The cause may be partial soiling of the lens cover.

Measure: clean the lens covers on the transmitter and receiver!

12.3 Error codes in the display

The following error messages can be output in the form of status codes in the device display.

Table 12.3: Normal mode

Status code	Description
RxS 0x0100	CxL in normal mode, start-up phase still running
RxS 0x0180	CxL reconfigures itself after a configuration. Process data is invalid.
RxS 0x0190	The measurement system is not active (after a stop command or if the first trigger pulse is missing).
RxS 0x0200	The “Leuze AutoControl ACON function” has detected soiling.
RxS 0x0300	Teach parameters have been changed (teaching must be done) or default values are active.
RxS 0x0FFF	CxL shuts down. Process data is invalid.

Table 12.4: Warnings

Error code	Description	Possible cause (s)
RxS 0x1000	Device in teach mode, no new process data available	• Distance between transmitter and receiver too large or too small • Poor alignment • Soiling • Extraneous light, especially mutual interference • Beams are interrupted, but blanking is deactivated • The maximum number of blanking areas is not sufficient • The number of beams to be blanked is greater than or equal to the number of all logical beams
RxS 0x1100 RxS 0x1001 RxS 0x11xy	Teaching error Trigger frequency too high The device could not end teach, no new process data available	
RxS 0x111x	Blanking error	
RxS 0x112x	Error due to weak signal Individual beams do not reach the minimum reception level	
RxS 0x113x	Internal error Device has reached the power limit	

Table 12.5: Errors (can be corrected)

Error code	Description	Measures
RxS 0x2000	No communication possible between transmitter and receiver.	Check cable.
RxS 0x2001	Receiver/transmitter inconsistency. The receiver is not compatible with the transmitter.	Replace transmitter.
RxS 0x2100	The supply voltage is not sufficient.	Check voltage supply.
RxS 0x2200	EEPROM data corrupt.	Reset device to factory settings.
RxS 0x23xy	Configuration error. xy gives information on the type of configuration error.	Contact service (see chapter 14). Reset device to factory settings. Check parameters and parameter relation.

Table 12.6: Serious errors (cannot be corrected)

Error	Description	Measures
RxS 0x3000	Hardware error, no details available	Return device following consultation with Service department (see chapter 14)
RxS 0x3001	Hardware error, transmitter 9V supply	
RxS 0x3002	Hardware error, transmitter 5V supply	
RxS 0x3003	Hardware error, receiver 5V supply	
RxS 0x3005	Hardware error, receiver cascade No receiver cascade or different LED number of transmitter and receiver	
RxS 0x3006	Hardware error, transmitter	
RxS 0x3007	Hardware error, inter-controller communication is interrupted	
RxS 0x3008	Hardware error, different number of diodes at transmitter and receiver	
RxS 0x3009 RxS 0x300A	Hardware error, no Rx cascades Hardware error, no Tx cascades	
RxS 0x3100 RxS 0x3101	Error in the factory settings. Can only be rectified by reprogramming the device firmware.	

13 Care, maintenance and disposal

13.1 Cleaning

In the event of dust build-up on the sensor:

↳ Clean the sensor with a soft cloth; use a cleaning agent (commercially available glass cleaner) if necessary.

NOTICE
Do not use aggressive cleaning agents! ↳ Do not use aggressive cleaning agents such as thinner or acetone for cleaning the light curtains. Use of improper cleaning agents can damage the lens cover.

13.2 Servicing

Usually, the light curtain does not require any maintenance by the operator.

Repairs to the device must only be carried out by the manufacturer.

↳ For repairs, contact your responsible Leuze electronic subsidiary or Leuze electronic customer service (see chapter 14).

13.2.1 Firmware update

A firmware update can only be performed by Leuze electronic customer service on-site or at the company headquarters.

↳ For firmware updates, contact your responsible Leuze electronic subsidiary or Leuze electronic customer service (see chapter 14).

13.3 Disposing

For disposal observe the applicable national regulations regarding electronic components.

14 Service and support

Defective devices are repaired in our service center competently and quickly. Leuze electronic offers you an extensive service packet to keep any necessary system downtimes to a minimum.

Our service center requires the following information:

- Customer number
- Part designation or part number
- Serial number or batch number
- Reason for return with description

24-hour on-call service at:
+49 (0) 7021 573-0

Service hotline:
+49 (0) 7021 573-123
Monday to Thursday, 8.00 a.m. to 5.00 p.m. (UTC+1)
Friday, 8.00 a.m. to 4.00 p.m. (UTC+1)

E-mail:
service.detect@leuze.de

Repair service and returns:
Procedure and Internet form can be found at
www.leuze.com/repair
Return address for repairs:
Service center
Leuze electronic GmbH + Co. KG
In der Braike 1
D-73277 Owen / Germany

15 Technical data

15.1 General specifications

Table 15.1: Optical data

Light source	LED (modulated light)
Wavelength	940 nm (infrared light)

Table 15.2: Measurement field data: Operating range limit and measurement field length of the CSL 710i

Beam spacing [mm]	Typ. op. range limit a) [m]		Measurement field length b) [mm]	
	min.	max.	min.	max.
5	0.1	4.5	160	2960
10	0.2	9.0	160	2880
20	0.2	9.0	150	2870
40	0.2	9.0	290	2850

a) Typ. operating range limit: min./max. attainable range without function reserve for parallel-beam scanning.

b) Measurement field lengths and beam spacings specified in fixed rasters, see ordering table.

Table 15.3: Operating ranges CSL 710

Beam spacing [mm]	Operating range [m] Parallel-beam		Operating range [m] Diagonal-beam		Operating range [m] Crossed-beam	
	min.	max.	min.	max.	min.	max.
5	0.1	3.5	0.2	2.6	0.2	2.2
10	0.3	7.0	0.3	5.2	0.3	4.4
20	0.3	7.0	0.3	5.2	0.3	4.4
40	0.3	7.0	0.6	5.2	0.6	4.4

Table 15.4: CSL 710 profile and measurement field lengths

Measurement field length B [mm] with beam spacing A 5 mm	Measurement field length B [mm] with beam spacing A 10 mm	Measurement field length B [mm] with beam spacing A 20 mm	Measurement field length B [mm] with beam spacing A 40 mm	Profile length L [mm]
160	160	150	-	168
240	-	-	-	248
320	320	310	290	328
400	-	-	-	408
480	480	470	-	488
560	-	-	-	568

Measurement field length B [mm] with beam spacing A 5 mm	Measurement field length B [mm] with beam spacing A 10 mm	Measurement field length B [mm] with beam spacing A 20 mm	Measurement field length B [mm] with beam spacing A 40 mm	Profile length L [mm]
640	640	630	610	648
720	-	-	-	728
800	800	790		808
880	-	-	-	888
960	960	950	930	968
1040	-	-	-	1048
1120	1120	1110	-	1128
1200	-	-	-	1208
1280	1280	1270	1250	1288
1360	-	-	-	1368
1440	1440	1430	-	1448
1520	-	-	-	1528
1600	1600	1590	1570	1608
1680	-	-	-	1688
1760	1760	1750	-	1768
1840	-	-	-	1848
1920	1920	1910	1890	1928
2000	-	-	-	2008
2080	2080	2070	-	2088
2160	-	-	-	2168
2240	2240	2230	2210	2248
2320	-	-	-	2328
2400	2400	2390	-	2408
2480	-	-	-	2488
2560	2560	2550	2530	2568
2640	-	-	-	2648
2720	2720	2710	-	2728
2800	-	-	-	2808
2880	2880	2870	2850	2888
2960	-	-	-	2968

Table 15.5: Data on the time behavior of the CSL 710

Response time per beam [a)]	30 µs
Readiness delay	≤ 1.5 s

a) Cycle time = number of beams x 0.03 ms + 0.4 ms. The minimum cycle time is 1 ms.

Table 15.6: Electrical data

Operating voltage U_B	18 … 30 VDC (incl. residual ripple)
Residual ripple	≤ 15% within the limits of U_B
Open-circuit current	see table 15.7

Table 15.7: Open-circuit current CSL 710

Measurement field length [mm]	Current consumption [mA] (without load at switching output)		
	at U_B 24 VDC	at U_B 18 VDC	at U_B 30 VDC
160	135	165	125
320	165	200	145
640	215	275	190
960	270	345	235
1440	350	455	300
1920	435	650	365
2880	600	780	500

Table 15.8: Interface data

Inputs/outputs	4 pins can be configured as input or output
Switching output current	Max. 100 mA
Signal voltage active/not active	≥ 8 V / ≤ 2 V
Activation delay	≤ 1 ms
Input resistance	Approx. 6 k Ω
Digital interfaces	IO-Link (230.4 kbit/s; 38.4 kbit/s)

Table 15.9: Mechanical data

Housing	Continuous-cast aluminum
Optics cover	PMMA plastic
Connection technology	M12 connectors (8-pin / 5-pin)

Table 15.10: Environmental data

Ambient temperature (operation)	-30 °C … +60 °C
Ambient temperature (storage)	-40 °C … +70 °C
Protective circuit	Transient protection Polarity reversal protection Short circuit protection for all outputs (provide external protective circuit for inductive load for this purpose!)

Table 15.11: Certifications

Degree of protection	IP 65
Safety class	III
Certifications	UL 508, CSA C22.2 No.14 Light source: exempt group (in acc. with EN 62471)
Standards applied	IEC 60947-5-2
Electromagnetic compatibility	IEC 61000-6-2 and EN 1000-6-4 Industrial interference emission This is a Class A product. In a domestic environment, this product may cause radio interference. In this case the operator may be required to take appropriate measures.

15.2 Timing

In principle, the individual beams are always processed sequentially for light curtains. The internal controller starts transmitter 1 and then activates only the corresponding receiver 1 to measure the received light power. If the measured value exceeds the switch-on threshold, this first beam is evaluated as an uninterrupted/free beam.

The time between activation of the transmitter and evaluation in the receiver is referred to as the response time per beam.

In the CSL 710 the response time per beam is = 30 µs.

The total cycle time for the evaluation of all beams and transmission to the interface is calculated as follows:

Cycle time = number of beams x response time per beam + constant

Example: cycle time = 192 beams x 0.03 ms + 0.4 ms = 6.16 ms

The minimum cycle time is 1 ms, i.e., the cycle time is never less than 1 ms, even with very short light curtains with a small number of beams.

Table 15.12: Profile and measurement field lengths, cycle times for CSL 710

Measurement field length B [mm]		Measurement field length B [mm]		Measurement field length B [mm]		Measurement field length B [mm]		Profile length L [mm]
with beam spacing A 5 [mm]	Cycle time [ms]	with beam spacing A 10 [mm]	Cycle time [ms]	with beam spacing A 20 [mm]	Cycle time [ms]	with beam spacing A 40 [mm]	Cycle time [ms]	
160	1.36	160	1.00	150	1.00	-	-	168
240	1.84	-	-	-	-	-	-	248
320	2.32	320	1.36	310	1.00	290	1.00	328
400	2.8	-	-	-	-	-	-	408
480	3.28	480	1.84	470	1.12	-	-	488

Measurement field length B [mm]		Measurement field length B [mm]		Measurement field length B [mm]		Measurement field length B [mm]		Profile length L [mm]
with beam spacing A 5 [mm]	Cycle time [ms]	with beam spacing A 10 [mm]	Cycle time [ms]	with beam spacing A 20 [mm]	Cycle time [ms]	with beam spacing A 40 [mm]	Cycle time [ms]	
560	3.76	-	-	-	-	-	-	568
640	4.24	640	2.32	630	1.36	610	1.00	648
720	4.72	-	-	-	-	-	-	728
800	5.2	800	2.8	790				808
880	5.68	-	-	-	-	-	-	888
960	6.16	960	3.28	950	1.84	930	1.12	968
1040	6.64	-	-	-	-	-	-	1048
1120	7.12	1120	3.76	1110	2.08	-	-	1128
1200	7.6	-	-	-	-	-	-	1208
1280	8.08	1280	4.24	1270	2.23	1250	1.36	1288
1360	8.56	-	-	-	-	-	-	1368
1440	9.04	1440	4.72	1430	2.56	-	-	1448
1520	9.52	-	-	-	-	-	-	1528
1600	10.0	1600	5.2	1590	2.8	1570	1.6	1608
1680	10.48	-	-	-	-	-	-	1688
1760	10.96	1760	5.68	1750	3.04	-	-	1768
1840	11.44	-	-	-	-	-	-	1848
1920	11.92	1920	6.16	1910	3.28	1890	1.84	1928
2000	12.4	-	-	-	-	-	-	2008
2080	12.88	2080	6.64	2070	3.52	-	-	2088
2160	13.36	-	-	-	-	-	-	2168
2240	13.84	2240	7.12	2230	3.76	2210	2.08	2248
2320	14.32	-	-	-	-	-	-	2328
2400	14.8	2400	7.6	2390	4.0	-	-	2408
2480	15.28	-	-	-	-	-	-	2488
2560	15.76	2560	8.08	2550	4.24	2530	2.32	2568
2640	16.24	-	-	-	-	-	-	2648
2720	16.72	2720	8.56	2710	4.48	-	-	2728
2800	17.2	-	-	-	-	-	-	2808
2880	17.68	2880	9.04	2870	4.72	2850	2.56	2888
2960	18.16	-	-	-	-	-	-	2968

Limits for detecting objects

The detection of objects and the evaluation of the data depend on the following factors:

- Beam resolution and cycle time of the light curtain
- Movement speed of the objects
- Transmission rate of the data bytes
- Cycle time of the PLC

Minimum object diameter for detection perpendicular to beam plane

For a moving object, the cycle time of the light curtain must be shorter than the period of time that the object to be detected is located in the beam plane.

For an object that moves vertically to the beam plane, the following apply:

$$v_{max} = (L - 10mm)/(t_z)$$

v_{max}	[m/s]	= Maximum object speed
L	[m]	= Length of the object in the direction of movement
t_z	[s]	= Cycle time of the light curtain

or

$$L_{min} = v \cdot t_z + 10mm$$

L_{min}	[m]	= Length of the object in the direction of movement (minimum length)
v	[m/s]	= Object speed
t_z	[s]	= Cycle time of the light curtain

NOTICE
Minimum length of the gap between two successive objects!
✎ The gap between two successive objects must be greater than the minimum object diameter.

15.3 Minimum object diameter for stationary objects

The minimum object diameter of a stationary object is determined by the beam spacing and optic diameter.

Minimum object diameter for “parallel”-beam mode:

The minimum object diameter depends on the beam spacing because objects also need to be reliably detected in the transition area between two beams.

Beam spacing	Minimum object diameter	
5 mm	Beam spacing + 5 mm	= 10 mm
10 mm / 20 mm / 40 mm	Beam spacing + 10 mm	= 20 mm / 30 mm / 50 mm

NOTICE
Minimum object diameter for “crossed beam” mode!
✎ In “crossed beam” mode, the object diameter in the center area is reduced to 1/2 x beam spacing.

15.4 Dimensioned drawings

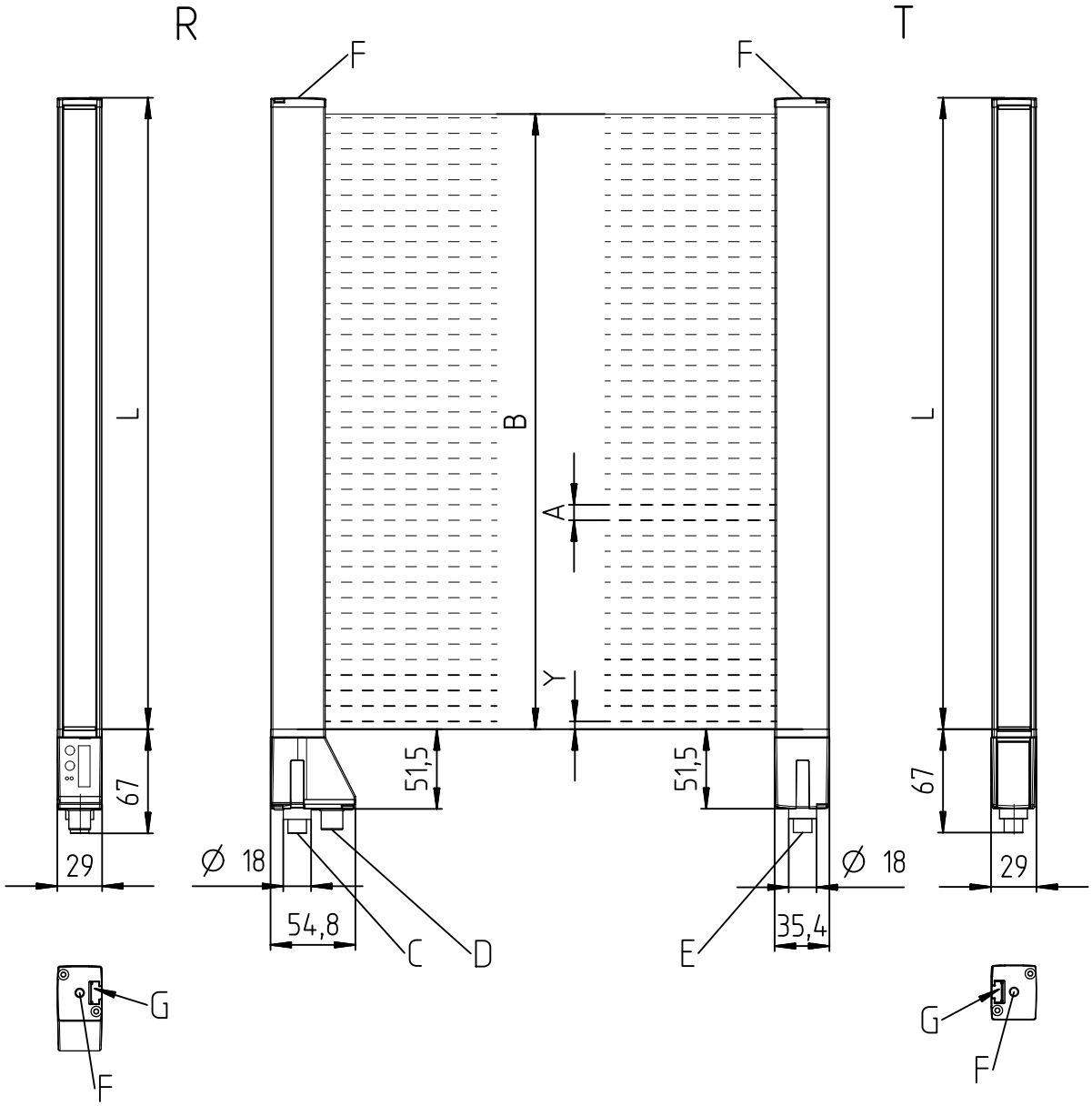

	all dimensions in mm
A	Beam spacing (see chapter 15.1)
B	Measurement field length
C	PWR IN/digital IO and IO-Link interface
D	Connection to transmitter - synchronization
E	Connection to receiver - synchronization
F	M6 thread
G	Fastening groove
L	Profile length (see table 15.12)
R	Receiver
T	Transmitter
Y	Devices with beam spacing 5 mm: Y = 2.5 mm
Y	Devices with beam spacing 10, 20, 40 mm: Y = 5 mm

Figure 15.1: CSL 710 with axial connector outlet

15.5 Dimensioned drawings: Accessories

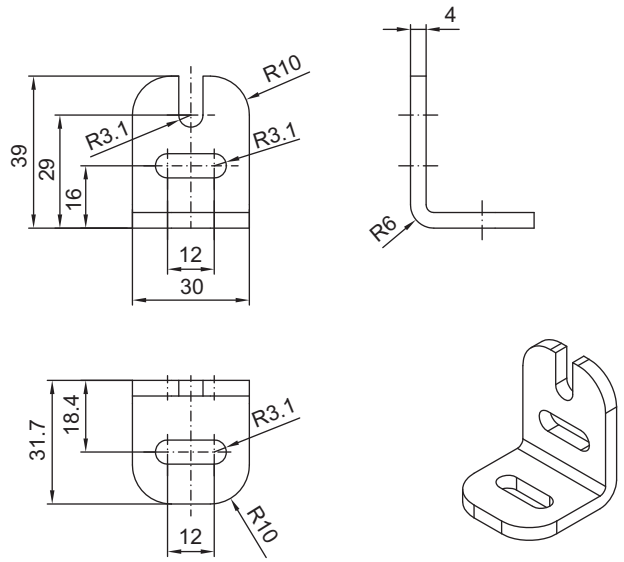

all dimensions in mm

Figure 15.2: BT-2L mounting bracket

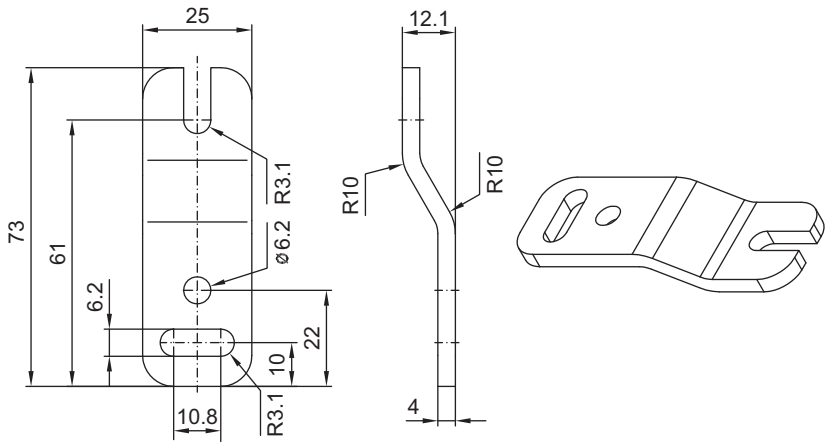

all dimensions in mm

Figure 15.3: BT-2Z parallel bracket

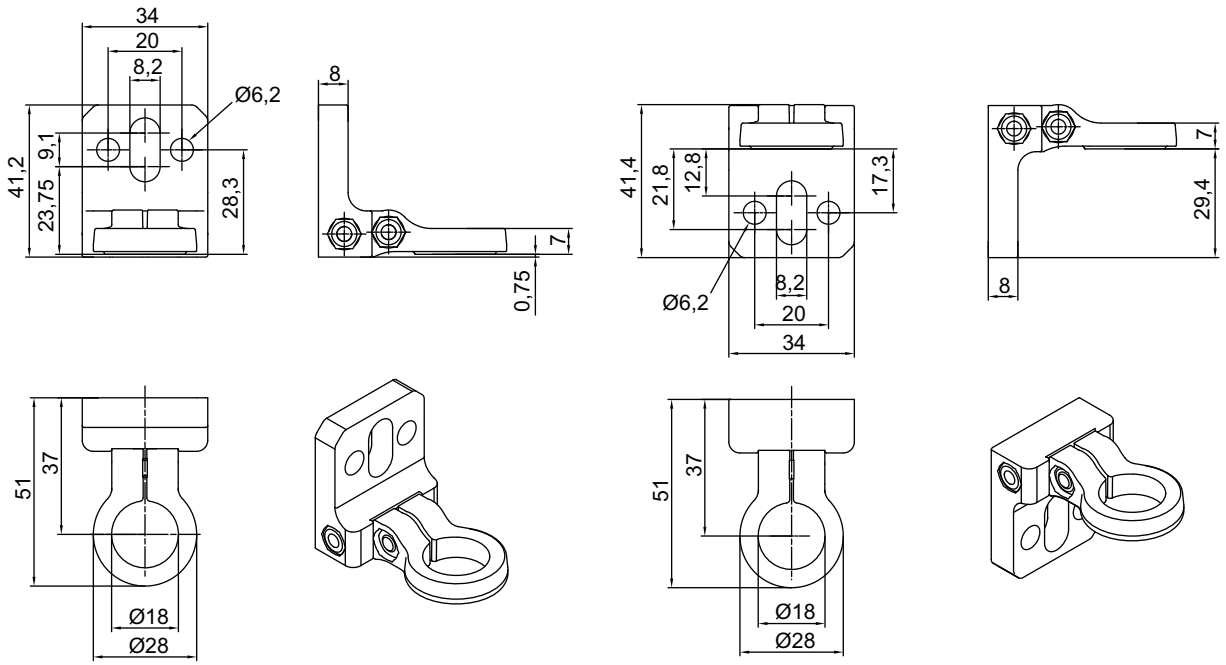

all dimensions in mm

Figure 15.4: BT-2R1 swivel mount (shown in two mounting views)

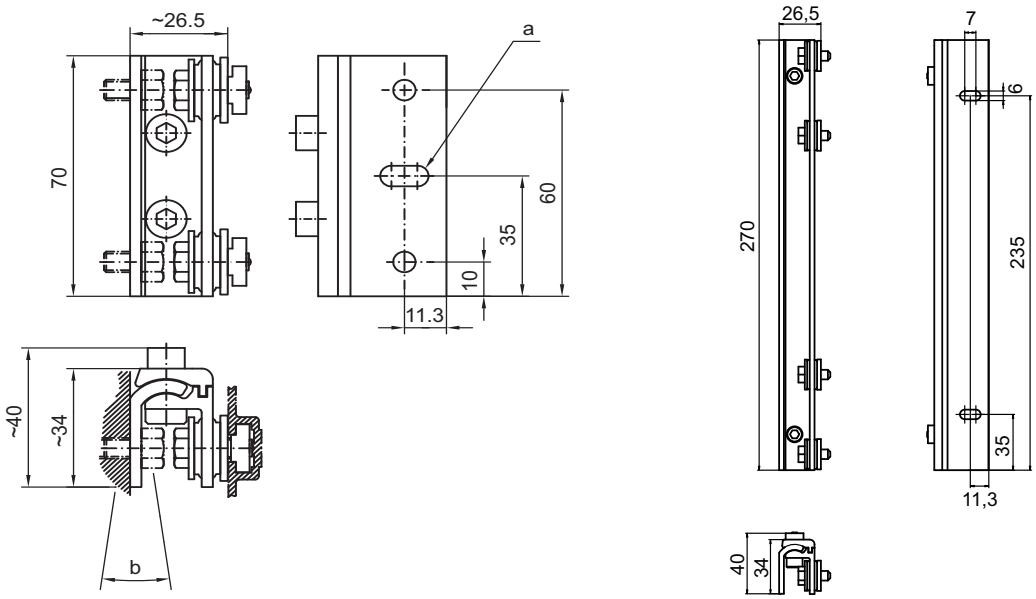

all dimensions in mm

Figure 15.5: BT-2SSD and BT-2SSD-270 swiveling mounting brackets

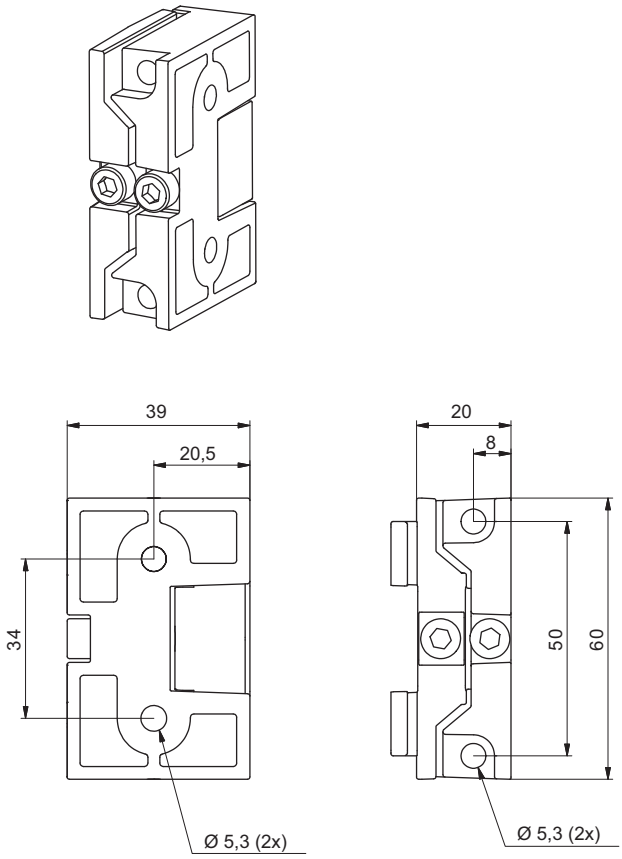

all dimensions in mm

Figure 15.6: BT-2SB10/BT-2SB10-S swiveling mounting brackets

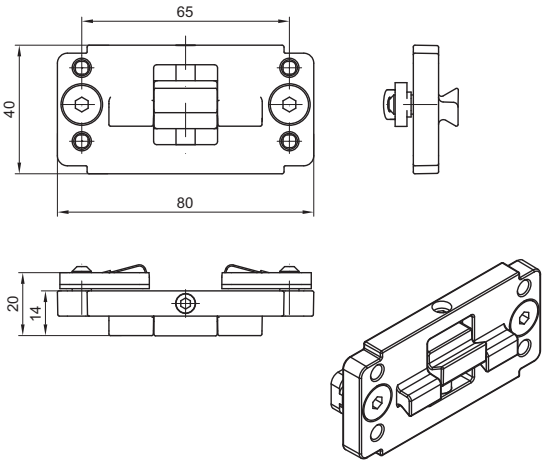

all dimensions in mm

Figure 15.7: BT-2P40 clamp bracket

16 Ordering information and accessories

16.1 Nomenclature

Part designation:
CSLbbb- fss-xxxx.a/ii-eee

Table 16.1: Part number code

CSL	Operating principle: switching light curtain
bbb	Series: 710 for CSL 710
f	Function classes: T: Transmitter R: Receiver
ss	Beam spacing: 05: 5 mm 10: 10 mm 20: 20 mm 40: 40 mm
xxxx	Measurement field length [mm], dependent on beam spacing: For values see tables
a	Equipment: A: axial connector outlet
ii	Interface: L: IO-Link
eee	Electrical connection: M12: M12 connector

Table 16.2: Part descriptions, examples

Part designation	Properties
CSL710-T20-2720.A-M12	CSL 710, transmitter, beam spacing 20 mm, measurement field length 2720 mm, axial connector outlet, M12 connector
CSL710-R20-2720.A/L-M12	CSL 710, receiver, beam spacing 20 mm, measurement field length 2720 mm, axial connector outlet, IO-Link interface, M12 connector

16.2 Accessories – CSL 710

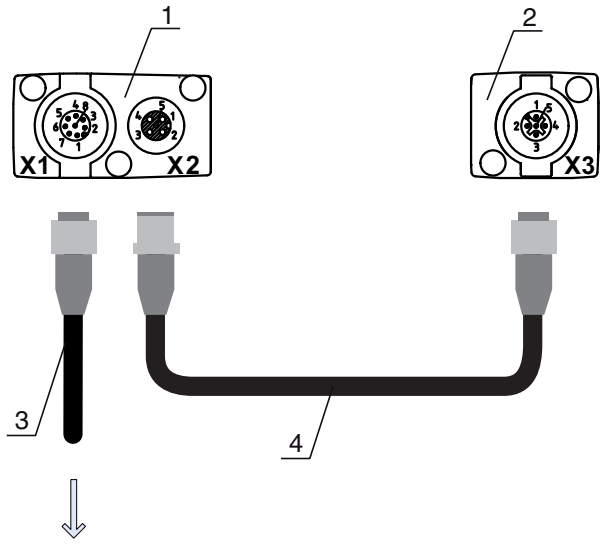

1 Receiver (R)
2 Transmitter (T)
3 Connection cable (M12 socket, 8-pin)
4 Synchronization cable (M12 plug/socket, 5-pin)

Figure 16.1: Electrical connection – CSL 710

16.2.1 Connection to the switch cabinet (screw terminals)

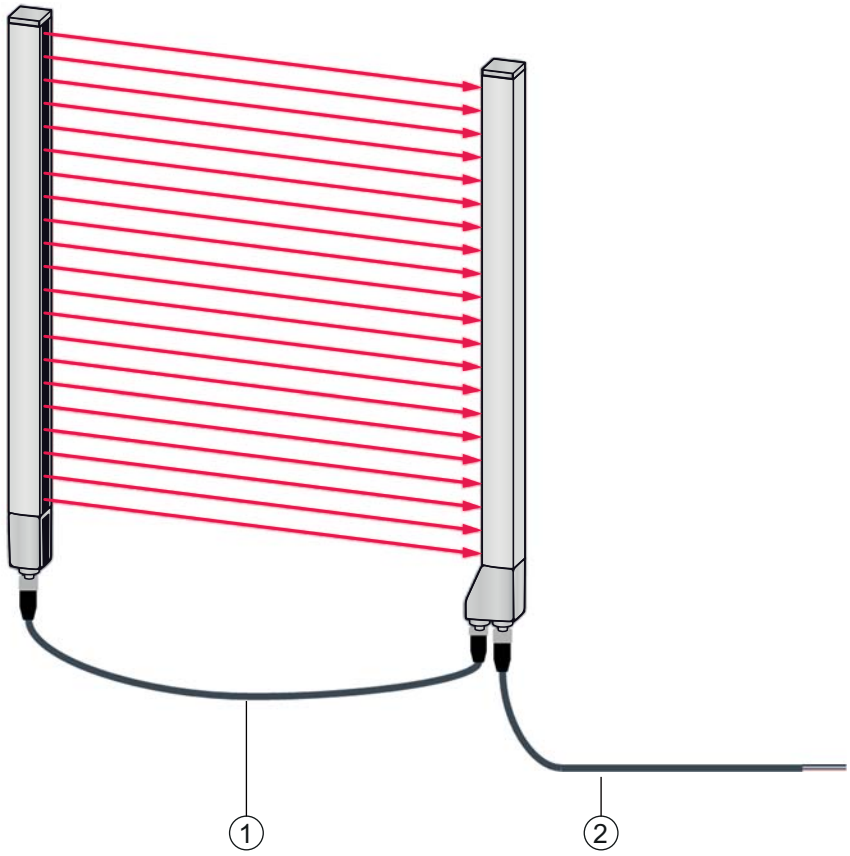

1 X2/X3 interconnection cable (transmitter – receiver synchronization), see table 16.4
2 X1 connection cable (IO-Link signal, digital IO, power for connection to control in switch cabinet), see table 16.3

Figure 16.2: CSL 710 connection

Table 16.3: X1 cable accessories – CSL 710

Part no.	Part designation	Description
X1 connection cables for CSL 710 (IO-Link signal, digital IO, power for connection to control in switch cabinet); see figure 16.2		
50104591	K-D M12A-8P-2m-PUR	Connection cable, M12 socket, axial, 8-pin, length 2,000 mm, shielded PUR cable, open cable end
50104590	K-D M12A-8P-5m-PUR	Connection cable, M12 socket, 8-pin, length 5,000 mm, shielded PUR cable, open cable end
50106882	K-D M12A-8P-10m-PUR	Connection cable, M12 socket, 8-pin, length 10,000 mm, shielded PUR cable, open cable end
429178	CB-M12-8GF	M12 socket, axial, 8-pin, user configurable

X1 cable (IO-Link/analog): core colors

- Pin1 = white
- Pin2 = brown
- Pin3 = green
- Pin4 = yellow
- Pin5 = gray
- Pin6 = pink
- Pin7 = blue
- Pin8 = red

The specified core colors apply only if the cables from Leuze electronic are used.

Table 16.4: X2/X3 cable accessories – CSL 710

Part no.	Part designation	Description
X2/X3 interconnection cables for CSL 710 (transmitter – receiver synchronization); see figure 16.2		
50129779	KDS DN-M12-5A-M12-5A-P3-010	Interconnection cable, M12 plug/socket, axial, 5-pin, A-coded, length 1,000 mm, shielded, PUR
50129780	KDS DN-M12-5A-M12-5A-P3-020	Interconnection cable, M12 plug/socket, axial, 5-pin, A-coded, length 2,000 mm, shielded, PUR
50129781	KDS DN-M12-5A-M12-5A-P3-050	Interconnection cable, M12 plug/socket, axial, 5-pin, A-coded, length 5,000 mm, shielded, PUR
50129782	KDS DN-M12-5A-M12-5A-P3-100	Interconnection cable, M12 plug/socket, axial, 5-pin, A-coded, length 10,000 mm, shielded, PUR
50129783	KDS DN-M12-5A-M12-5A-P3-200	Interconnection cable, M12 plug/socket, axial, 5-pin, A-coded, length 20,000 mm, shielded, PUR

16.2.2 Connection to IO-Link master

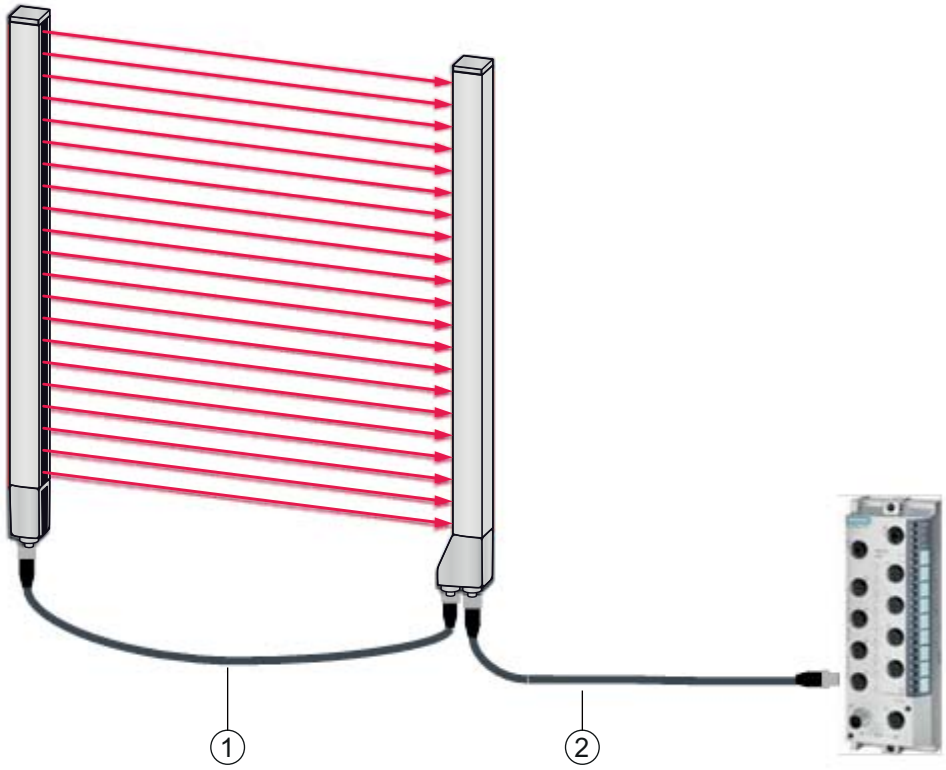

1 X2/X3 interconnection cables (transmitter – receiver synchronization), see table 16.6
2 X1 connection cable (IO-Link, power to IO-Link master with M12 connections), see table 16.5

Figure 16.3: Connection to IO-Link master

Table 16.5: X1 cable accessories – CSL 710

Part no.	Part designation	Description
X1 interconnection cables for CSL 710 (IO-Link, power to IO-Link master with M12 connections); see figure 16.3		
50120999	K-DS M12A-8P-4P-2m-L-PUR	Interconnection cable: M12 socket, 8-pin, A-coded; shielded PUR cable, length 2,000 mm; M12 plug, 4-pin, A-coded
50121000	K-DS M12A-8P-4P-5m-L-PUR	Interconnection cable: M12 socket, 8-pin, A-coded; shielded PUR cable, length 5,000 mm; M12 plug, 4-pin, A-coded

Table 16.6: X2/X3 cable accessories – CSL 710

Part no.	Part designation	Description
X2/X3 interconnection cables for CSL 710 (transmitter – receiver synchronization); see figure 16.3		
50129779	KDS DN-M12-5A-M12-5A-P3-010	Interconnection cable, M12 plug/socket, axial, 5-pin, A-coded, length 1,000 mm, shielded, PUR
50129780	KDS DN-M12-5A-M12-5A-P3-020	Interconnection cable, M12 plug/socket, axial, 5-pin, A-coded, length 2,000 mm, shielded, PUR

Part no.	Part designation	Description
50129781	KDS DN-M12-5A-M12-5A-P3-050	Interconnection cable, M12 plug/socket, axial, 5-pin, A-coded, length 5,000 mm, shielded, PUR
50129782	KDS DN-M12-5A-M12-5A-P3-100	Interconnection cable, M12 plug/socket, axial, 5-pin, A-coded, length 10,000 mm, shielded, PUR
50129783	KDS DN-M12-5A-M12-5A-P3-200	Interconnection cable, M12 plug/socket, axial, 5-pin, A-coded, length 20,000 mm, shielded, PUR

16.3 Accessories – fastening technology

Table 16.7: Mounting technology accessories

Part no.	Part designation	Description
Mounting technology		
429056	BT-2L	L mounting bracket (angled), 2x
429057	BT-2Z	Z mounting bracket (parallel), 2x
429046	BT-2R1	360° swivel mount, 2x incl. 1 MLC cylinder
429058	BT-2SSD	Swiveling mounting bracket with vibration damper, ± 8°, 70 mm long, 2x
429059	BT-4SSD	Swiveling mounting bracket with vibration damper, ± 8°, 70 mm long, 4x
429049	BT-2SSD-270	Swiveling mounting bracket with vibration damper, ± 8°, 270 mm long, 2x
424422	BT-2SB10	Swiveling mounting bracket, ± 8°, 2x
424423	BT-2SB10-S	Swiveling mounting bracket with vibration damper, ±8°, 2x
424417	BT-2P40	Clamp bracket
425740	BT-10NC60	Sliding block with M6 thread, 10x
425741	BT-10NC64	Sliding block with M6 and M4 thread, 10x
425742	BT-10NC65	Sliding block with M6 and M5 thread, 10x

16.4 Accessories – PC connection

Table 16.8: Accessories - PC connection configuration

Part no.	Part designation	Description
IO-Link USB master V2.0		
50121098	SET MD12-US2- IL1.1 + accessories	IO-Link USB master V2.0 Plug-in power supply unit (24 V/24 W) with international adapters High-speed USB 2.0 connection cable; USB A to Mini-USB Data carrier with software, drivers and documentation
Adapter cables for CSL 710 (IO-Link)		
50120999	K-DS M12A-8P-4P-2m L-PUR	Adapter cable: M12 socket, 8-pin, B-coded; PUR cable, length 2,000 mm; M12 plug, 5-pin, B-coded
50121000	K-DS M12A-8P-4P-5m L-PUR	Adapter cable: M12 socket, 8-pin, B-coded; PUR cable, length 5,000 mm; M12 plug, 5-pin, B-coded

16.5 Accessories - Device columns

For devices with axial connector outlet only

Table 16.9: Accessories - Device columns

Part no.	Part designation	Description
549881	UDC-1000-S2-R	Device column, U-shaped, profile height 1000 mm
549882	UDC-1300-S2-R	Device column, U-shaped, profile height 1300 mm
549883	UDC-1600-S2-R	Device column, U-shaped, profile height 1600 mm
549884	UDC-1900-S2-R	Device column, U-shaped, profile height 1900 mm
549885	UDC-2500-S2-R	Device column, U-shaped, profile height 2500 mm
549886	UDC-3100-S2-R	Device column, U-shaped, profile height 3100 mm

16.6 Scope of delivery

- 1 transmitter incl. 2 sliding blocks (profile length from 2 m: 3 sliding blocks; profile length from 2.5 m: 4 sliding blocks)
- 1 receiver incl. 2 sliding blocks, (profile length from 2 m: 3 sliding blocks; profile length from 2.5 m: 4 sliding blocks)
- 1 set of operating instructions (PDF file on data carrier)

Connection and interconnection cables, mounting brackets, IO-Link USB master (incl. *Sensor Studio* configuration software), etc., are not included in the delivery contents but must rather be ordered separately.

17 EC Declaration of Conformity

The switching light curtains of the CSL series have been developed and manufactured in accordance with the applicable European standards and directives.

The manufacturer of the product, Leuze electronic GmbH + Co. KG in D-73277 Owen, possesses a certified quality assurance system in accordance with ISO 9001.