SMART
SENSOR
BUSINESS

Leuze electronic

the sensor people

MLC 520S
Safety Light Curtains

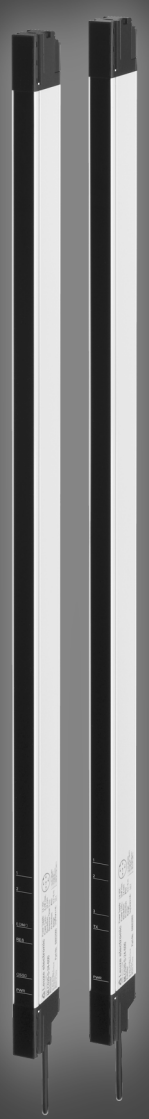

EN 2019/03/11 - 50137900
We reserve the right to make technical changes

SAFE IMPLEMENTATION AND OPERATION
Original operating instructions

ПРОМЭЛЕКТРОНИКА / sales@prom-elec.com

© 2019
Leuze electronic GmbH & Co. KG
In der Braike 1
D-73277 Owen / Germany
Phone: +49 7021 573-0
Fax: +49 7021 573-199
http://www.leuze.com
info@leuze.com

1 About this document ... 5
1.1 Used symbols and signal words ... 5
1.2 Checklists ... 6
2 Safety ... 7
2.1 Intended use and foreseeable misuse ... 7
2.1.1 Intended use ... 7
2.1.2 Foreseeable misuse ... 8
2.2 Necessary competencies ... 8
2.3 Responsibility for safety ... 9
2.4 Disclaimer ... 9
3 Device description ... 10
3.1 Device overview of the MLC family ... 10
3.2 Connection technology ... 10
3.3 Cascading ... 11
3.4 Display elements ... 12
3.4.1 Operation indicators on the MLC 520S transmitter/receiver ... 12
4 Functions ... 14
4.1 Start/restart interlock RES ... 14
4.2 EDM contactor monitoring ... 15
5 Applications ... 16
5.1 Point of operation guarding ... 16
6 Mounting ... 17
6.1 Arrangement of transmitter and receiver ... 17
6.1.1 Calculation of safety distance S ... 17
6.1.2 Calculation of safety distance if protective fields act orthogonally to the approach direction ... 18
6.1.3 Minimum distance to reflective surfaces ... 21
6.1.4 Preventing mutual interference between adjacent devices ... 22
6.2 Mounting the safety sensor ... 23
6.2.1 Suitable mounting locations ... 23
6.2.2 Mounting with O-shaped mounting brackets ... 24
6.2.3 Mounting with C-shaped mounting brackets ... 25
6.2.4 Mounting with L-shaped mounting brackets ... 27
6.2.5 Mounting with L- and C-shaped mounting brackets ... 29
6.3 Mounting accessories ... 30
6.3.1 Deflecting mirror for multiple-side guarding ... 30
6.3.2 Mounting cascading ... 30
7 Electrical connection ... 33
7.1 Pin assignment transmitter and receiver ... 33
7.1.1 MLC 520S transmitter ... 33
7.1.2 MLC 520S receiver ... 34
8 Starting up the device ... 35
8.1 Switching on ... 35
8.2 Aligning the sensor ... 35
8.3 Minimum distance for cascade system ... 37
8.4 Selection of RESTART mode and operation ... 37
8.5 Unlocking start/restart interlock ... 39

9 Testing ... 40
9.1 Before commissioning and following modifications ... 40
9.1.1 Checklist for integrator – to be performed prior to commissioning and following modifications ... 40
9.2 To be performed periodically by competent persons ... 42
9.3 Periodically by the operator ... 42
9.3.1 Checklist – periodically by the operator ... 42
10 Maintenance ... 44
11 Troubleshooting ... 45
11.1 What to do in case of failure? ... 45
11.2 Operating indicator of the LEDs ... 45
12 Disposing ... 48
13 Service and support ... 49
14 Technical data ... 50
14.1 General specifications ... 50
14.2 Dimensions, weight, response time ... 52
14.3 Dimensioned drawings: Accessories ... 54
15 Order guide and accessories ... 57
16 EU/EC Declaration of Conformity ... 60

1 About this document

1.1 Used symbols and signal words

Tab. 1.1: Warning symbols and signal words

	Symbol indicating dangers to persons
	Symbol indicating possible property damage
NOTE	Signal word for property damage Indicates dangers that may result in property damage if the measures for danger avoidance are not followed.
CAUTION	Signal word for minor injuries Indicates dangers that may result in minor injury if the measures for danger avoidance are not followed.
WARNING	Signal word for serious injury Indicates dangers that may result in severe or fatal injury if the measures for danger avoidance are not followed.
DANGER	Signal word for life-threatening danger Indicates dangers with which serious or fatal injury is imminent if the measures for danger avoidance are not followed.

Tab. 1.2: Other symbols

	Symbol for tips Text passages with this symbol provide you with further information.
↳	Symbol for action steps Text passages with this symbol instruct you to perform actions.
⇨	Symbol for action results Text passages with this symbol describe the result of the preceding action.

Tab. 1.3: Terms and abbreviations

Response time	The response time of the protective device is the maximum time between the occurrence of the event that results in activation of the safety sensor and the provision of the switching signal at the interface of the protective device (e.g., OFF state of the OSSD pair).
AOPD	Active Optoelectronic Protective Device (**A**ctive **O**ptoelectronic **P**rotective **D**evice)
ESPE	**E**lectro-**s**ensitive **p**rotective **e**quipment
EDM	Contactor monitoring (**E**xternal **D**evice **M**onitoring)
LED	LED, display element in transmitter and receiver
MLC	Brief description of the safety sensor, consisting of transmitter and receiver
$MTTF_d$	Mean time to dangerous failure (**M**ean **T**ime **T**o dangerous **F**ailure)
OSSD	Safety-related switching output (**O**utput **S**ignal **S**witching **D**evice)

PFH_d	Probability of a dangerous failure per hour (**P**robability of dangerous **F**ailure per **H**our)
PL	**P**erformance **L**evel
RES	Start/restart interlock (Start/**RES**tart interlock)
Scan	Consecutive scans of the protective field from the first to the last beam
Safety sensor	System consisting of transmitter and receiver
SIL	**S**afety **I**ntegrity **L**evel
State	ON: device intact, OSSD switched on OFF: device intact, OSSD switched off Locking: device, connection or control / operation faulty, OSSD switched off (lock-out)

1.2 Checklists

The checklists (see chapter 9 "Testing") serve as a reference for the machine manufacturer or supplier. They replace neither testing of the complete machine or system prior to initial commissioning nor their periodic testing by a qualified person (see chapter 2.2 "Necessary competencies"). The checklists contain minimum testing requirements. Depending on the application, other tests may be necessary.

2 Safety

For mounting, operating and testing, this document as well as all applicable national and international standards, regulations, rules and directives must be observed. Relevant and supplied documents must be observed, printed out and handed to affected persons.

↳ Before working with the safety sensor, completely read and observe the documents applicable to your task.

In particular, the following national and international legal regulations apply for the commissioning, technical inspections and work with safety sensors:

- Directive 2006/42/EC
- Directive 2014/35/EU
- Directive 2014/30/EU
- Directive 89/655/EEC supplemented by directive 95/63 EC
- OSHA 1910 Subpart O
- Safety regulations
- Accident-prevention regulations and safety rules
- Ordinance on Industrial Safety and Health and employment protection act
- Product Safety Law (ProdSG and 9. ProdSV)

	NOTICE
	For safety-related information you may also contact local authorities (e.g., industrial inspectorate, employer's liability insurance association, labor inspectorate, occupational safety and health authority).

2.1 Intended use and foreseeable misuse

	WARNING
	A running machine may result in serious injury! ↳ Make certain that the safety sensor is correctly connected and that the protective function of the protective device is ensured. ↳ Make certain that, during all conversions, maintenance work and inspections, the system is securely shut down and protected against being restarted.

2.1.1 Intended use

- The safety sensor may only be used after it has been selected in accordance with the respectively applicable instructions and relevant standards, rules and regulations regarding labor protection and safety at work, and after it has been installed on the machine, connected, commissioned, and checked by a competent person (see chapter 2.2 "Necessary competencies"). The devices are designed for indoor use only.
- When selecting the safety sensor it must be ensured that its safety-related capability meets or exceeds the required performance level PL_r ascertained in the risk assessment (see chapter 14.1 "General specifications").
- The safety sensor protects persons or body parts at points of operation, danger zones or access points of machines and systems.
- With the *access guarding* function, the safety sensor detects persons only when they enter the danger zone but cannot tell whether there are any persons inside the danger zone. For this reason, a start/restart interlock or a suitable stepping behind protection in the safety chain is essential in this case.
- Maximum permissible approach speeds (see ISO 13855):
  - 1.6 m/s for access guarding
  - 2.0 m/s for guards of points of operation
- The construction of the safety sensor must not be altered. When manipulating the safety sensor, the protective function is no longer guaranteed. Manipulating the safety sensor also voids all warranty claims against the manufacturer of the safety sensor.

- The improper repair of the protective device may result in loss of the protective function. Make no repairs to the device components.
- The safety sensor must be inspected regularly by a competent person to ensure proper integration and mounting (see chapter 2.2 "Necessary competencies").
- The safety sensor must be exchanged after a maximum of 20 years. Repairs or the exchange of wear parts do not extend the mission time.

2.1.2 Foreseeable misuse

Any use other than that defined under the “Approved purpose” or which goes beyond that use is considered improper use.

In principle, the safety sensor is **not** suitable as a protective device for use in the following cases:

- Danger posed by ejected objects or the spraying of hot or hazardous liquids from within the danger zone
- Applications in explosive or easily flammable atmospheres

2.2 Necessary competencies

The safety sensor may only be configured, installed, connected, commissioned, serviced and tested in its respective application by persons who are suitably qualified for the given task. General prerequisites for suitably qualified persons:

- They have a suitable technical education.
- They are familiar with the relevant parts of the operating instructions for the safety sensor and the operating instructions for the machine.

Task-specific minimum requirements for competent persons:

Configuration

Specialist knowledge and experience in the selection and use of protective devices on machines as well as the application of technical rules and the locally valid regulations on labor protection, safety at work and safety technology.

Specialist knowledge in programming safety-related controls SRASW acc. to ISO 13849-1.

Mounting

Specialist knowledge and experience needed for the safe and correct installation and alignment of the safety sensor with regard to the respective machine.

Electrical installation

Specialist knowledge and experience needed for the safe and correct electrical connection as well as safe integration of the safety sensor in the safety-related control system.

Operation and maintenance

Specialist knowledge and experience needed for the regular inspection and cleaning of the safety sensor – following instruction by the person responsible.

Servicing

Specialist knowledge and experience in the mounting, electrical installation and the operation and maintenance of the safety sensor in accordance with the requirements listed above.

Commissioning and testing

- Experience and specialist knowledge in the rules and regulations of labor protection, safety at work and safety technology that are necessary for being able to assess the safety of the machine and the use of the safety sensor, including experience with and knowledge of the measuring equipment necessary for performing this work.
- In addition, a task related to the subject matter is performed in a timely manner and knowledge is kept up to date through continuous further training - *Competent person* in terms of the German Betriebssicherheitsverordnung (Ordinance on Industrial Safety and Health) or other national legal regulations.

2.3 Responsibility for safety

Manufacturer and operator must ensure that the machine and implemented safety sensor function properly and that all affected persons are adequately informed and trained.

The type and content of all imparted information must not lead to unsafe actions by users.

The manufacturer of the machine is responsible for:

- Safe machine construction and information on any residual risks
- Safe implementation of the safety sensor, verified by the initial test performed by a competent person (see chapter 2.2 "Necessary competencies")
- Imparting all relevant information to the operating company
- Adhering to all regulations and directives for the safe commissioning of the machine

The operator of the machine is responsible for:

- Instructing the operator
- Maintaining the safe operation of the machine
- Adhering to all regulations and directives for labor protection and safety at work
- Periodic testing by a competent person (see chapter 2.2 "Necessary competencies")

2.4 Disclaimer

The liability of Leuze electronic GmbH + Co. KG is to be excluded in the following cases:

- Safety sensor is not used as intended.
- Safety notices are not adhered to.
- Reasonably foreseeable misuse is not taken into account.
- Mounting and electrical connection are not properly performed.
- Proper function is not tested (see chapter 9 "Testing").
- Changes (e.g., constructional) are made to the safety sensor.

3 Device description

The safety sensors from the MLC 500 series are active opto-electronic protective devices. They satisfy the following standards:

	MLC 500
Type in accordance with EN IEC 61496	4
Category in accordance with EN ISO 13849	4
Performance Level (PL) in accordance with EN ISO 13849-1:2015	e
Safety Integrity Level (SIL) in accordance with IEC 61508 and SILCL in accordance with EN IEC 62061	3

The safety sensor consists of a transmitter and a receiver (see chapter 3.1 "Device overview of the MLC family"). It is protected against overvoltage and overcurrent acc. to IEC 60204-1 (protection class 3). The safety sensor is not dangerously influenced by ambient light (e.g., welding sparks, warning lights).

3.1 Device overview of the MLC family

The series consists of a transmitter and the corresponding receiver. An overview of the characteristic features is given in the following table.

Tab. 3.1: Device models in the series with specific features and functions

	Transmitter	Receiver
	MLC 520S	MLC 520S
OSSDs (2x)		■
LED indicator	■	■
Automatic start/restart		■
RES	■	
EDM		■

Protective field properties

The beam distance and the number of beams are dependent on the resolution and protective field height.

Device synchronization

The synchronization of receiver and transmitter for creating a functioning protective field is done optically, i.e. without cables, via one specially coded synchronization beam. The synchronization beam is the beam closest to the cable connection. A cycle (i.e. a pass from the first to the last beam) is called a scan.

3.2 Connection technology

The transmitter and receiver feature cables with M12 connectors as an interface to the machine control with the following number of pins:

Device model	Device type	Device plug
MLC 520S	Transmitter/receiver	5-pin

3.3 Cascading

To implement linked protective fields, up to three MLC safety light curtains can be cascaded one after the other.

Adjacent protective fields, e.g., for stepping behind protection, can thereby be implemented without any additional expense for control and connection. The master system performs all necessary processor tasks, provides indicators and the receiver-side interfaces to the machine and command devices.

Devices with different resolutions can be combined.

To enable connection in cascade systems, cascade cables are available as accessories.

With mounting brackets, an L- or U-shaped fixed connection can be created (see chapter 15 "Order guide and accessories").

Mounting instructions see chapter 6.3.2 "Mounting cascading".

3.4 Display elements

The display elements of the safety sensors simplify start-up and fault analysis.

3.4.1 Operation indicators on the MLC 520S transmitter/receiver

Located on both the transmitter and receiver are six LEDs for displaying the operating state:

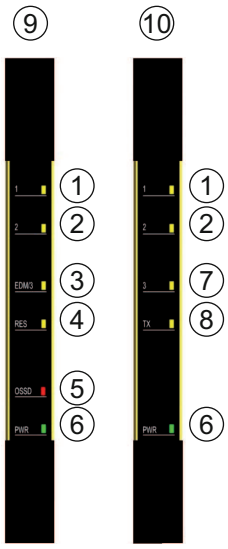

1	LED1
2	LED2
3	LED EDM/3
4	LED RES
5	OSSD LED
6	PWR LED
7	LED3
8	LED TX
9	Transmitter
10	Receiver

Fig. 3.1: Indicators on the MLC 520S transmitter/receiver

Tab. 3.2: Meaning of the LEDs on the transmitter

Operating mode	LED indicator BLINK INDIFFERENT OFF ON	Description
NORMAL OPERATION		Normal operation
LOCKOUT ERROR		Internal error
		Optical scan error
		Cascade communication error
		Reset error

Tab. 3.3: Meaning of the LEDs on the receiver

Operating mode	LED indicator BLINK INDIFFERENT OFF ON	Description
ALIGNMENT		Alignment indicator
NORMAL OPERATION		Normal operation – manual reset
NORMAL OPERATION		Normal operation
		Safety status
		EDM function enabled
LOCKOUT ERROR		Internal error
		Optical scanning error
		EDM error
		Cascade communication error
		Restart function error
		Safety-related switching outputs error
		Supply error

4 Functions

An overview of features and functions of the safety sensor can be found in chapter “Device description” (see chapter 3.1 "Device overview of the MLC family").

Overview of functions

- Start/restart interlock (RES)
- EDM

4.1 Start/restart interlock RES

After accessing the protective field, the start/restart interlock ensures that the safety sensor remains in the OFF state after the protective field has been cleared. It prevents automatic release of the safety circuits and automatic start-up of the system, e.g. if the protective field is again clear or if an interruption in the voltage supply is restored.

NOTICE

For access guarding, the start/restart interlock function is mandatory. The protective device may only be operated without start/restart interlock in certain exceptional cases and under certain conditions acc. to ISO 12100.

WARNING

Deactivation of the start/restart interlock may result in serious injury!

↳ Implement the start/restart interlock on the machine or in a downstream safety circuit.

Using start/restart interlock

↳ Wire the MLC 520S receiver appropriately for the desired function (see chapter 7 "Electrical connection").

The start/restart interlock function is activated or deactivated through appropriate wiring

Switching the safety sensor back on after shutting down (OFF state):

↳ Press the reset button (press/release between 0.15 s and 4 s)

NOTICE

The reset button must be located outside the danger zone in a safe place and give the operator a good view of the danger zone so that he/she can check whether anyone is located in it (according to IEC 62046) before pressing the reset button.

DANGER

Risk of death if start/restart is operated unintentionally!

↳ Ensure that the reset button for unlocking the start/restart interlock cannot be reached from the danger zone.

↳ Before unlocking the start/restart interlock, make certain that no people are in the danger zone.

After the reset button has been actuated, the safety sensor switches to the ON state.

4.2 EDM contactor monitoring

	NOTICE
	The contactor monitoring of the MLC 520S safety sensors can be activated through appropriate wiring (see chapter 7 "Electrical connection")!

The “contactor monitoring” function monitors the contactors, relays or valves connected downstream of the safety sensor. Prerequisite for this are switching elements with positive-guided feedback contacts (normally closed contacts).

Implement the contactor monitoring function:

- through appropriate wiring of the MLC 520S safety sensors (see chapter 7 "Electrical connection").
- through the external contactor monitoring of the downstream safety relay, (e.g. MSI series from Leuze electronic)
- or through contactor monitoring of the downstream safety PLC (optional, integrated via a safety bus)

If contactor monitoring is activated (see chapter 7 "Electrical connection"), it operates dynamically, i.e., in addition to monitoring the closed feedback circuit every time before the OSSDs are switched on, it also checks whether the release of the feedback circuit opened within 350 ms and, after the OSSDs are switched off, whether it has closed again within 350 ms. If this is not the case, the OSSDs return to the OFF state after being switched on briefly. An error message is displayed (see chapter 11 "Troubleshooting"). The receiver switches to the fault interlock state from which it can only be returned to normal operation by switching the supply voltage off and back on again.

5 Applications

The safety sensor only creates square protective fields.

5.1 Point of operation guarding

Point of operation guarding for hand and finger protection is typically the most common application for this safety sensor. In accordance with EN ISO 13855, resolutions from 14 to 40 mm make sense here. This yields the necessary safety distance, among others (see chapter 6.1.1 "Calculation of safety distance S").

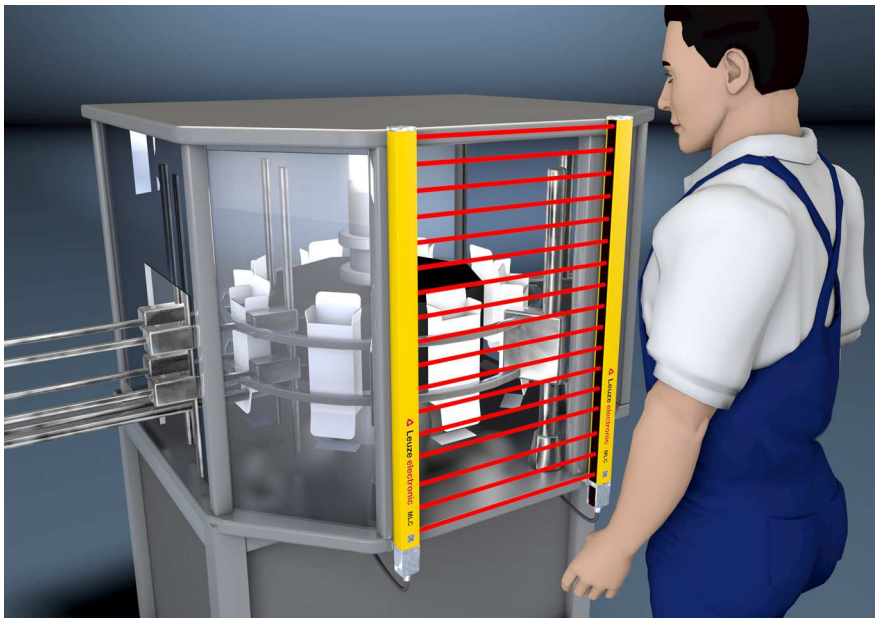

Fig. 5.1: Point of operation guarding protects reaching into the danger zone, e.g. for cartoners or filling systems

Fig. 5.2: Point of operation guarding protects reaching into the danger zone, e.g. for a pick & place robot application

6 Mounting

WARNING

Improper mounting may result in serious injury!

The protective function of the safety sensor is only ensured if appropriately and professionally mounted for the respective, intended area of application.

- Only allow the safety sensor to be installed by qualified persons (see chapter 2.2 "Necessary competencies").
- Maintain the necessary safety distances (see chapter 6.1.1 "Calculation of safety distance S").
- Make sure that stepping behind, crawling under or stepping over the protective device is reliably ruled out and reaching under, over or around is taken into account in the safety distance, if applicable with additional distance C_{RO} corresponding to ISO 13855.
- Take measures to prevent that the safety sensor can be used to gain access to the danger zone, e.g. by stepping or climbing into it.
- Observe the relevant standards, regulations and these instructions.
- Clean the transmitter and receiver at regular intervals: environmental conditions (see chapter 14 "Technical data"), care (see chapter 10 "Maintenance").
- After mounting, check the safety sensor for proper function.

6.1 Arrangement of transmitter and receiver

Optical protective devices can only perform their protective function if they are mounted with adequate safety distance. When mounting, all delay times must be taken into account, such as the response times of the safety sensor and control elements as well as the stopping time of the machine, among others.

The following standards specify calculation formulas:

- IEC 61496-2, "Active optoelectronic protective devices": distance of the reflecting surfaces/deflecting mirrors
- ISO 13855, "Safety of machines - The positioning of protective equipment in respect of approach speeds of parts of the human body": mounting situation and safety distances

NOTICE

In accordance with ISO 13855, with a vertical protective field, it is possible to pass under beams over 300 mm or pass over beams under 900 mm. If the protective field is horizontal, climbing on the safety sensor must be prevented through suitable installation or with covers and the like.

6.1.1 Calculation of safety distance S

General formula for calculating the safety distance S of an Optoelectronic Protective Device acc. to ISO 13855

$$S = K \cdot T + C$$

S	[mm]	=	Safety distance
K	[mm/s]	=	Approach speed
T	[s]	=	Total time of the delay, sum from ($t_a + t_i + t_m$)
t_a	[s]	=	Response time of the protective device
t_i	[s]	=	Response time of the safety relay
t_m	[s]	=	Stopping time of the machine
C	[mm]	=	Additional distance to the safety distance

NOTICE	
	If longer stopping times are determined during regular inspections, an appropriate additional time must be added to t_m.

6.1.2 Calculation of safety distance if protective fields act orthogonally to the approach direction

With vertical protective fields, ISO 13855 differentiates between

- S_{RT}: safety distance concerning access **through** the protective field
- S_{RO}: safety distance concerning access **over** the protective field

The two values are distinguished by the way additional distance C is determined:

- C_{RT}: from a calculation formula or as a constant (see chapter 6.1.1 "Calculation of safety distance S")
- C_{RO}: from the following table “Reaching over the vertical protective field of electro-sensitive protective equipment (excerpt from ISO 13855)”

The larger of the two values S_{RT} and S_{RO} is to be used.

Calculation of safety distance S_{RT} acc. to ISO 13855 when access occurs through the protective field:

Calculation of safety distance S_{RT} for point of operation guarding

$$S_{RT} = K \cdot T + C_{RT}$$

S_{RT}	[mm]	=	Safety distance
K	[mm/s]	=	Approach speed for point of operation guarding with approach reaction and normal approach direction to the protective field (resolution 14 to 40 mm): 2000 mm/s or 1600 mm/s, when S_{RT} > 500 mm
T	[s]	=	Total time of the delay, sum from ($t_a + t_i + t_m$)
t_a	[s]	=	Response time of the protective device
t_i	[s]	=	Response time of the safety relay
t_m	[s]	=	Stopping time of the machine
C_{RT}	[mm]	=	Additional distance for point of operation guarding with approach reaction with resolutions of 14 to 40 mm, d = resolution of protective device $C_{RT} = 8 \times (d - 14)$ mm

Calculation of safety distance S_{Ro} acc. to ISO 13855 when protective field is accessed from above:

Calculation of safety distance S_{Ro} for point of operation guarding

$$S_{RO} = K \cdot T + C_{RO}$$

S_{RO}	[mm]	=	Safety distance
K	[mm/s]	=	Approach speed for point of operation guarding with approach reaction and normal approach direction to the protective field (resolution 14 to 40 mm): 2000 mm/s or 1600 mm/s, when S_{RO} > 500 mm
T	[s]	=	Total time of the delay, sum from ($t_a + t_i + t_m$)
t_a	[s]	=	Response time of the protective device
t_i	[s]	=	Response time of the safety relay
t_m	[s]	=	Stopping time of the machine
C_{RO}	[mm]	=	Additional distance in which a body part can move towards the protective device before the protective device triggers: value (see the following table “Reaching over the vertical protective field of electro-sensitive protective equipment (excerpt from ISO 13855)”).

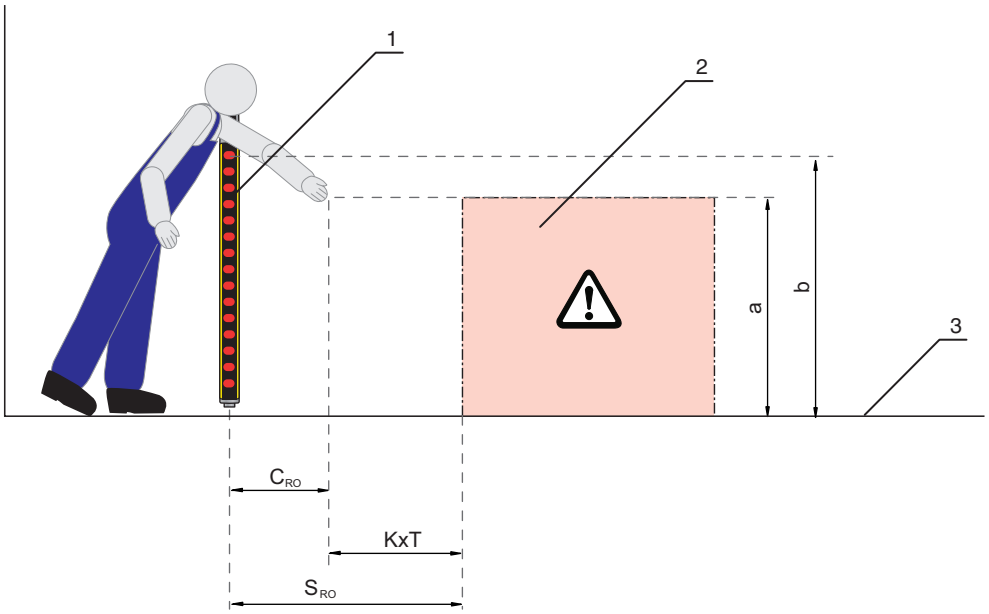

1	Safety sensor
2	Danger zone
3	Floor
a	Height of the point of operation
b	Height of the upper beam of the safety sensor

Fig. 6.1: Additional distance to the safety distance when reaching over and under

Tab. 6.1: Reaching over the vertical protective field of electro-sensitive protective equipment(excerpt from ISO 13855)

Height a of the point of opera-tion [mm]	**Height b of the upper edge of the protective field of the electro-sensitive protective equipment**											
	900	**1000**	**1100**	**1200**	**1300**	**1400**	**1600**	**1800**	**2000**	**2200**	**2400**	**2600**
	Additional distance C_{RO} to the danger zone [mm]											
2600	0	0	0	0	0	0	0	0	0	0	0	0
2500	400	400	350	300	300	300	300	300	250	150	100	0
2400	550	550	550	500	450	450	400	400	300	250	100	0
2200	800	750	750	700	650	650	600	550	400	250	0	0
2000	950	950	850	850	800	750	700	550	400	0	0	0
1800	1100	1100	950	950	850	800	750	550	0	0	0	0
1600	1150	1150	1100	1000	900	850	750	450	0	0	0	0
1400	1200	1200	1100	1000	900	850	650	0	0	0	0	0
1200	1200	1200	1100	1000	850	800	0	0	0	0	0	0
1000	1200	1150	1050	950	750	700	0	0	0	0	0	0
800	1150	1050	950	800	500	450	0	0	0	0	0	0
600	1050	950	750	550	0	0	0	0	0	0	0	0
400	900	700	0	0	0	0	0	0	0	0	0	0
200	600	0	0	0	0	0	0	0	0	0	0	0
0	0	0	0	0	0	0	0	0	0	0	0	0

Depending on the specified values you can work with the above-mentioned table in three ways:

1. Given are:
   - Height a of the point of operation
   - Distance S of the point of operation from the safety sensor, and additional distance C_{RO}

To be determined is the required height b of the upper beam of the safety sensor and thereby its protective field height.

- ↳ Look for the line with the specification of the point of operation height in the left column.
- ↳ In this line, look for the column with the next highest specification for additional distance C_{RO}.
- ⇨ The required height of the upper beam of the safety sensor is up top in the column head.

2. Given are:
   - Height a of the point of operation
   - Height b of the upper beam of the safety sensor

To be determined is the required distance S of the safety sensor to the point of operation and thereby additional distance C_{RO}.

- ↳ In the column head, look for the column with the next lowest entry for the height of the upper beam of the safety sensor.
- ↳ Look for the line with the next highest specification of the point of operation height a in this column.
- ⇨ In the intersection point of the line and the column, you will find additional distance C_{RO}.

3. Given are:
   - Distance S of the point of operation from the safety sensor, and additional distance $C_{RO.}$
   - Height b of the upper beam of the safety sensor

To be determined is the permitted height a of the point of operation.

- ↳ In the column head, look for the column with the next lowest entry for the height of the upper beam of the safety sensor.
- ↳ Look for the next lowest value for real additional distance C_{RO} in this column.
- ⇨ In this line, go to the left column: here you will find the permitted height of the point of operation.
- ↳ Now calculate safety distance S using the general formula acc. to ISO 13855 (see chapter 6.1.1 "Calculation of safety distance S").
- ⇨ The larger of the two values S_{RT} and S_{RO} is to be used.

6.1.3 Minimum distance to reflective surfaces

WARNING

Failure to maintain minimum distances to reflective surfaces may result in serious injury!

Reflective surfaces can indirectly deflect the transmitter beams to the receiver. In this case, interruption of the protective field is not detected.

- Determine the minimum distance a (see figure below).
- Make certain that all reflective surfaces are the necessary minimum distance away from the protective field according to IEC 61496-2 (see the following diagram “Minimum distance to reflective surfaces as a function of the protective field width”).
- Check that reflective surfaces do not impair the detection capability of the safety sensor before start-up and at appropriate intervals.

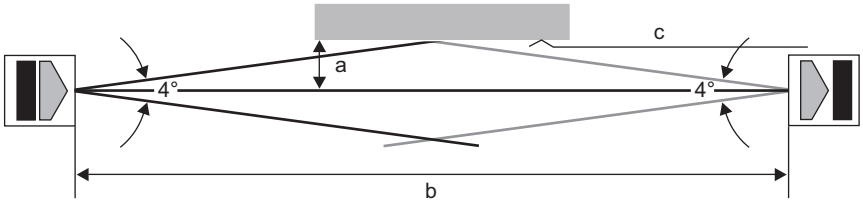

a Required minimum distance to reflective surfaces [mm]
b Protective field width [m]
c Reflective surface

Fig. 6.2: Minimum distance to reflective surfaces depending on protective field width

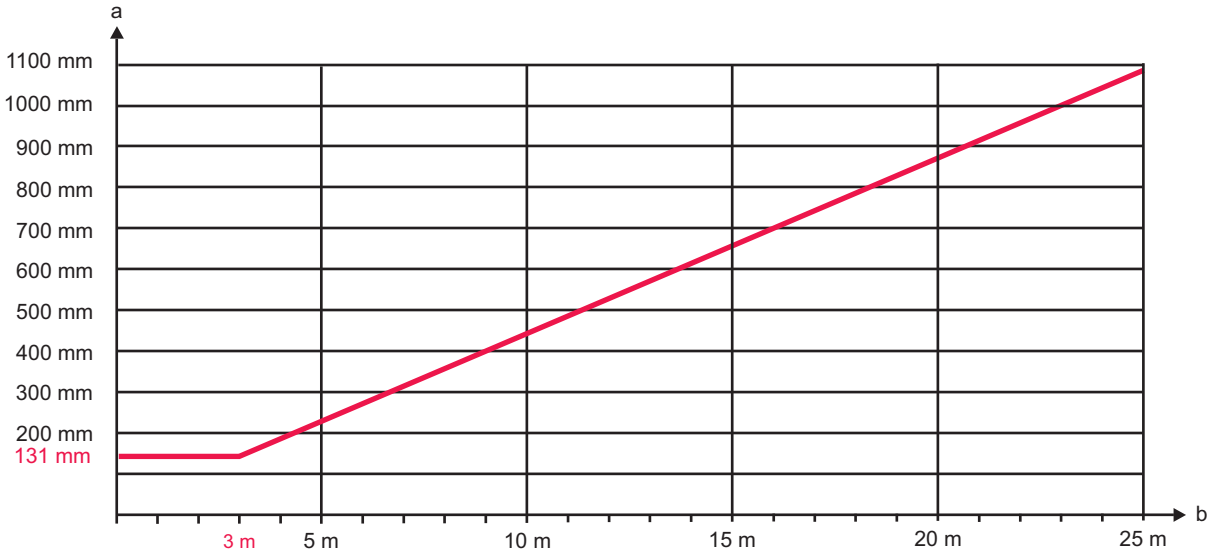

a Required minimum distance to reflective surfaces [mm]
b Protective field width [m]

Fig. 6.3: Minimum distance to reflective surfaces as a function of the protective field width

Tab. 6.2: Formula for calculating the minimum distance to reflective surfaces

Distance (b) transmitter-receiver	Calculation of the minimum distance (a) to reflective surfaces
b ≤ 3 m	a [mm] = 131
b > 3 m	a [mm] = tan(2.5°) × 1000 × b [m] = 43.66 × b [m]

6.1.4 Preventing mutual interference between adjacent devices

If a receiver is located in the beam path of an adjacent transmitter, optical crosstalk, and thus erroneous switching and failure of the protective function, may result.

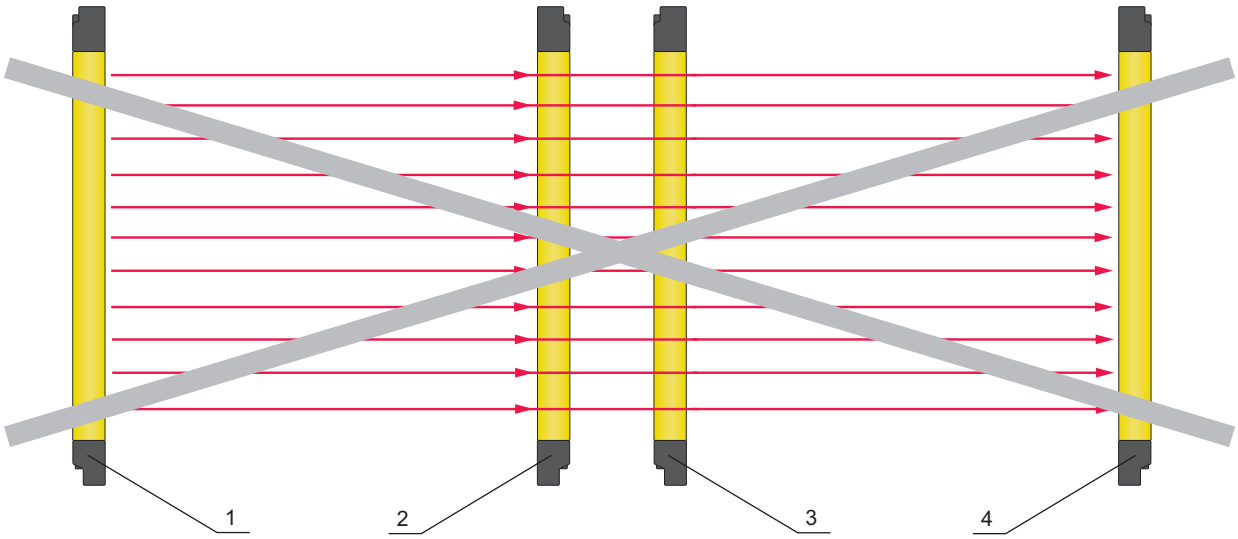

Fig. 6.4: Optical crosstalk between adjacent safety sensors (transmitter 1 influences receiver 2) due to incorrect mounting

1 Transmitter 1
2 Receiver 1
3 Transmitter 2
4 Receiver 2

NOTICE

Possible impairment of the availability due to systems mounted close to each other!

The transmitter of one system can influence the receiver of the other system.

↳ Prevent optical crosstalk between adjacent devices.

↳ Mount adjacent devices with a shield between them or install a dividing wall to prevent mutual interference.

↳ Mount the adjacent devices opposite from one another to prevent mutual interference.

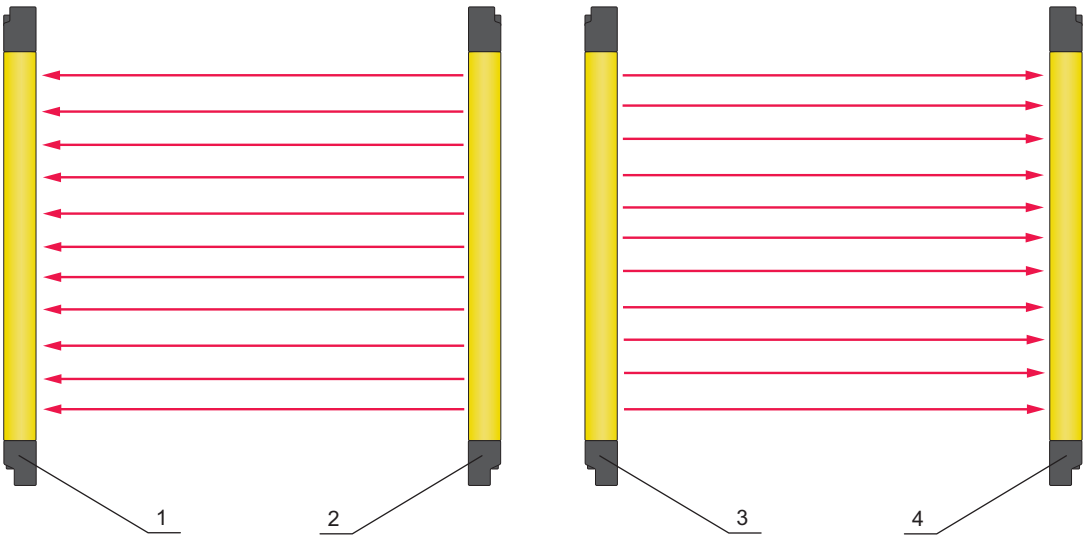

Fig. 6.5: Opposite mounting

1 Receiver 1
2 Transmitter 1
3 Transmitter 2
4 Receiver 2

6.2 Mounting the safety sensor

Proceed as follows:

- Select the type of fastening:
  - O-shaped mounting bracket (see chapter 6.2.2 "Mounting with O-shaped mounting brackets")
  - C-shaped mounting bracket (see chapter 6.2.3 "Mounting with C-shaped mounting brackets")
  - L-shaped mounting bracket (see chapter 6.2.4 "Mounting with L-shaped mounting brackets")
  - Mounting with L- and C-shaped mounting brackets (see chapter 6.2.5 "Mounting with L- and C-shaped mounting brackets")
- Have a suitable tool at hand and mount the safety sensor in accordance with the notices regarding the mounting locations (see chapter 6.2.1 "Suitable mounting locations").
- If possible, affix safety notice stickers on the mounted safety sensor or device column (included in delivery contents).

After mounting, you can electrically connect (see chapter 7 "Electrical connection"), start up, align (see chapter 8 "Starting up the device"), and test (see chapter 9.1 "Before commissioning and following modifications") the safety sensor.

6.2.1 Suitable mounting locations

Area of application: Mounting

Tester: Technician who mounts the safety sensor

Tab. 6.3: Checklist for mounting preparations

Check:	Yes	No
Do the protective field height and dimensions satisfy the requirements of ISO 13855?		
Is the safety distance to the point of operation maintained (see chapter 6.1.1 "Calculation of safety distance S")?		
Is the minimum distance to reflective surfaces maintained (see chapter 6.1.3 "Minimum distance to reflective surfaces")?		
Is it impossible for safety sensors that are mounted next to one another to mutually interfere with one another (see chapter 6.1.4 "Preventing mutual interference between adjacent devices")?		
Can the point of operation or the danger zone only be accessed through the protective field?		
Has bypassing the protective field by crawling under, reaching over, or jumping over been prevented or has corresponding additional distance C_{RO} in accordance with ISO 13855 been observed?		
Is stepping behind the protective device prevented or is mechanical protection available?		
Do the transmitter and receiver connections point in the same direction?		
Can the transmitter and receiver be fastened in such a way that they cannot be moved and turned?		
Is the safety sensor accessible for testing and replacing?		
Is it impossible to actuate the reset button from within the danger zone?		
Can the entire danger zone be seen from the installation site of the reset button?		
Can reflection caused by the installation site be ruled out?		

NOTICE

If you answer one of the items on the checklist above with **no**, the mounting location must be changed.

6.2.2 Mounting with O-shaped mounting brackets

↳ Drill two bore holes in the holder with a center distance of Lø according to the table.

Model	Lø [mm]
150	162.20
210	222.10
270	282.00
300	312.00
330	341.90
360	371.90
390	401.70
420	431.70
450	461.70
480	491.60
510	621.60
540	551.50
570	581.50
600	611.50

↳ Mount the two O-shaped mounting brackets in the correct position. In doing so, do not completely tighten the M4 screws.

↳ Place the device between the two brackets. Snap the ends of the light curtain in the mounting brackets.

↳ Fully tighten the screws with a maximum tightening torque of 1.2 Nm.

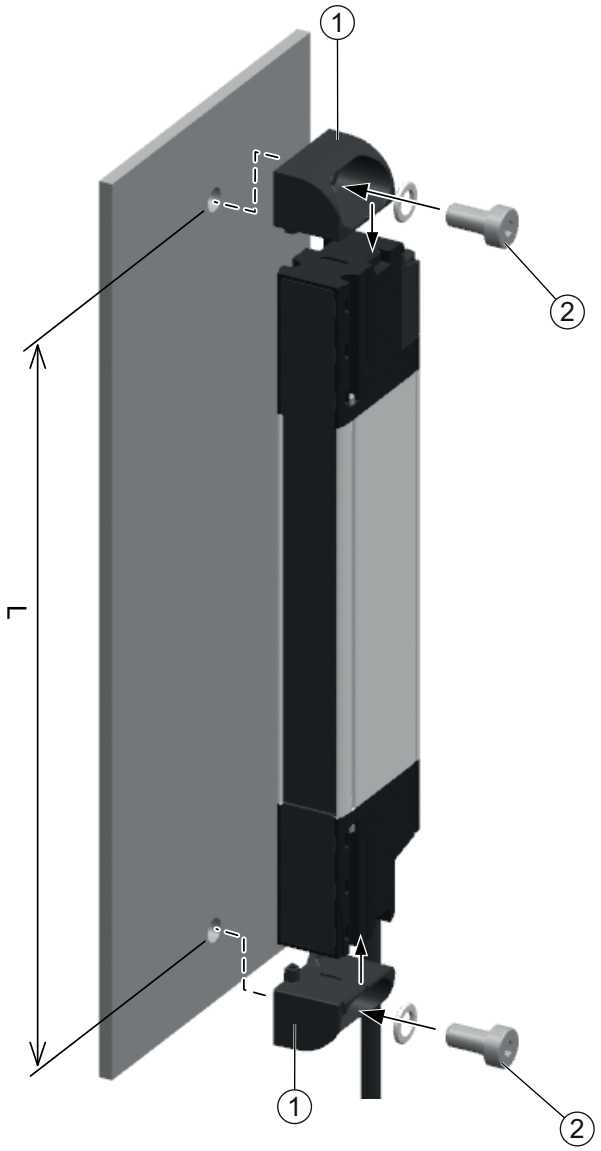

1 O-shaped mounting bracket
2 M4 screw, tightening torque: 1.2 Nm max.

Fig. 6.6: Mounting with O-shaped mounting brackets

6.2.3 Mounting with C-shaped mounting brackets

- Mount the C-shaped mounting brackets with the M4 screws at the correct distance. The recommended distance for the C-shaped mounting brackets depends on the device; it is approximately 1/4 the length of the light curtain. This distance is measured from the head surface or end part of the light curtain. Tighten the M4 screws with a tightening torque of 2 Nm.
- Position the upper clamping jaw of the C-shaped mounting bracket by screwing on the M3 screw. Do not completely tighten the screw.
- Insert the device in the lower seat of the C-shaped mounting bracket with a slight incline. To do this, use the corresponding lateral slot of the profile.
- Turn the device until the anchor of the upper jaw is reached.
- Tighten the M3 screw with a tightening torque of maximum 1.2 Nm.
- For lengths up to 600 mm, 2 C-shaped mounting brackets suffice; for longer lengths, 3 C-shaped mounting brackets are recommended. The third mounting bracket is used as an additional support in the middle.

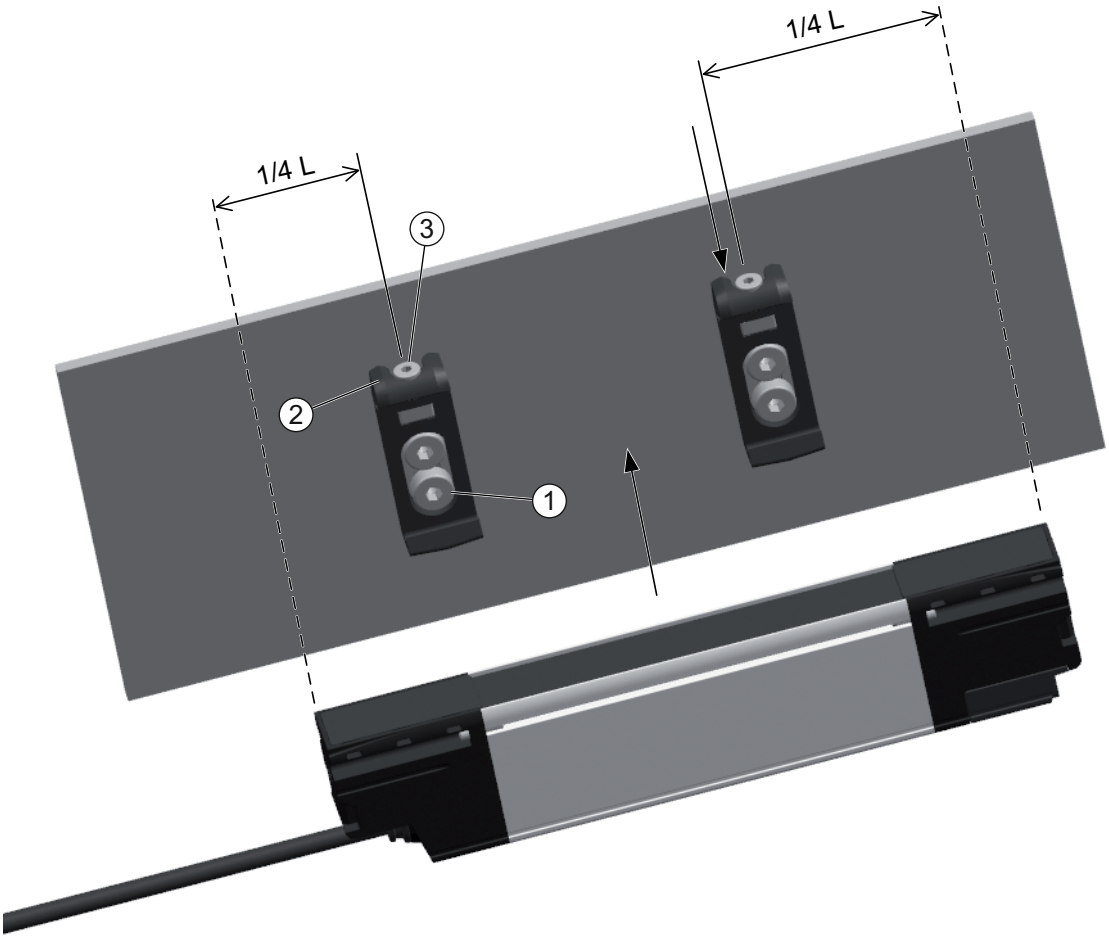

1	M4x10 UNI 9327 screws, tightening torque: 2 Nm max
2	Upper clamping jaw of the C-shaped mounting bracket
3	M3x8 UNI 9327 screw, tightening torque: 1.2 Nm max
L	Light curtain length

Fig. 6.7: Mounting with C-shaped mounting brackets

6.2.4 Mounting with L-shaped mounting brackets

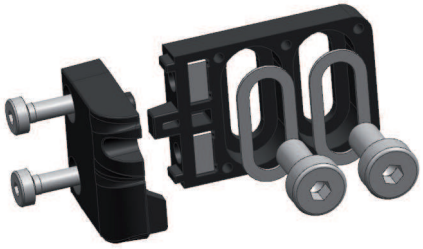

- Mount the lower L-shaped mounting bracket at the desired height. Tighten the M4 screws with a tightening torque of 2 Nm.
- Mount the retaining plate of the L-shaped mounting bracket so that the end part of the device protrudes by no more than 1 mm over the upper fitting surface of the plate.
- Clamp the device in the lower L-shaped mounting bracket and align with the respective reference marks while doing so.
- Fasten the L part of the upper L-shaped mounting bracket with the M3 screws. Tighten the M3 screws with a tightening torque of 1.2 Nm.

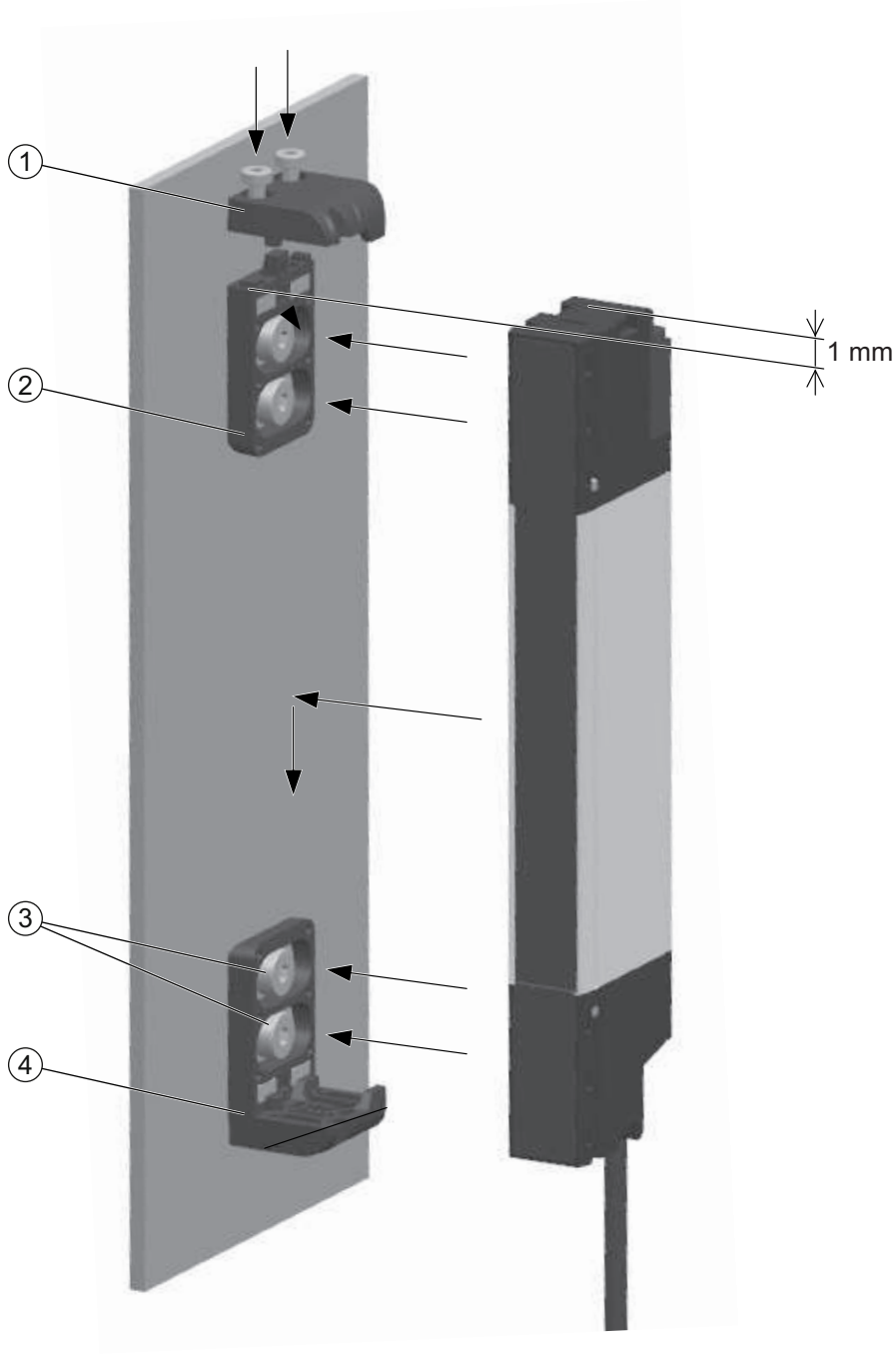

1	M3x8 UNI 9327 screws, tightening torque: 1.2 Nm max
2	Retaining plate of the upper L-shaped mounting bracket
3	M4x10 UNI 9327 screws, tightening torque: 2 Nm max
4	Lower L-shaped mounting bracket

Fig. 6.8: Mounting with L-shaped mounting brackets

ПРОМЭЛЕКТРОНИКА / sales@prom-elec.com

6.2.5 Mounting with L- and C-shaped mounting brackets

- Mount the lower L-shaped mounting bracket at the desired height in the lower part. Tighten the M4 screws with a tightening torque of 2 Nm and the M3 screws with a tightening torque of 1.2 Nm.
- Mount the C-shaped mounting bracket at the desired height. The recommended distance for the C-shaped mounting bracket depends on the device; it is approximately 1/4 the length of the light curtain. This distance is measured from the head surface or end part of the light curtain. Tighten the M4 screws with a tightening torque of 1.2 Nm.
- Position the upper clamping jaw of the C-shaped mounting bracket by screwing on the M3 screw. Do not completely tighten the screw.
- Insert the device in the lower seat of the L-shaped mounting bracket with a slight incline. To do this, use the corresponding lateral slot of the profile. Turn the device so that it snaps into the upper clamping jaw of the C-shaped mounting bracket.
- Slide the device until it reaches the limit stop on the L-shaped mounting bracket.
- Tighten the M3 screw of the C-shaped mounting bracket with a tightening torque of 2 Nm.

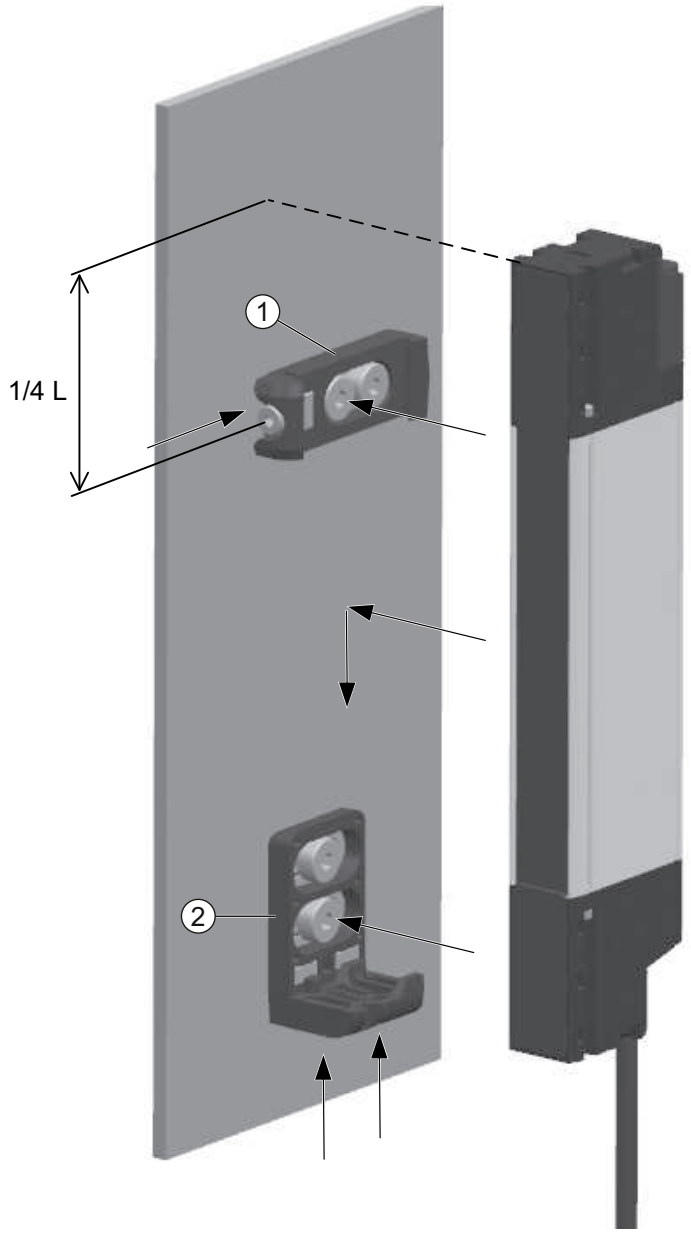

1	C-shaped mounting bracket
2	L-shaped mounting bracket
L	Light curtain length

Fig. 6.9: Mounting with L- and C-shaped mounting brackets

6.3 Mounting accessories

6.3.1 Deflecting mirror for multiple-side guarding

For multiple-side guarding, redirecting the protective field with one or two deflecting mirrors is economical. To do this, Leuze electronic supplies:

- The UM60 deflecting mirror for mounting on the machine in various lengths (see chapter 15 "Order guide and accessories")
- suitable BT-2UM60 swivel mounts

The range is reduced by approx. 10 % per deflection. A laser alignment aid with red light laser is recommended for the alignment of transmitter and receiver (Aligning of deflecting mirrors with the laser alignment aid).

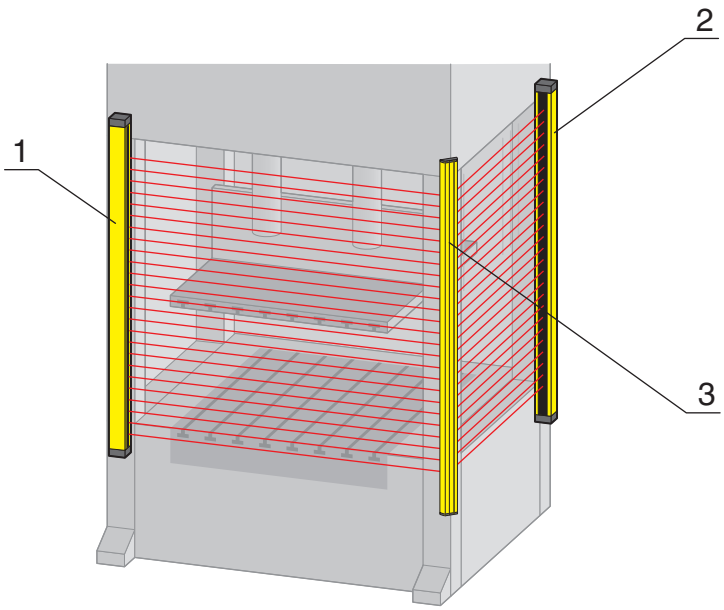

1 Transmitter
2 Receiver
3 UM60 deflecting mirrors

Fig. 6.10: Arrangement with deflecting mirror for 2-side guarding of a point of operation

6.3.2 Mounting cascading

Connecting the cascade unit

- Mount all cascade units with the intended mounting brackets.
- Loosen the two fastening screws on the receiver and on the transmitter and remove the two connection cables of the master and slave 1 (if present).
- Fasten the cascade cables in place of the removed connection cables. Make certain that the bending of all cables is not less than 4 mm.
- Connect the M12 connectors of slave 1 to the M12 sockets of the cascade cables.

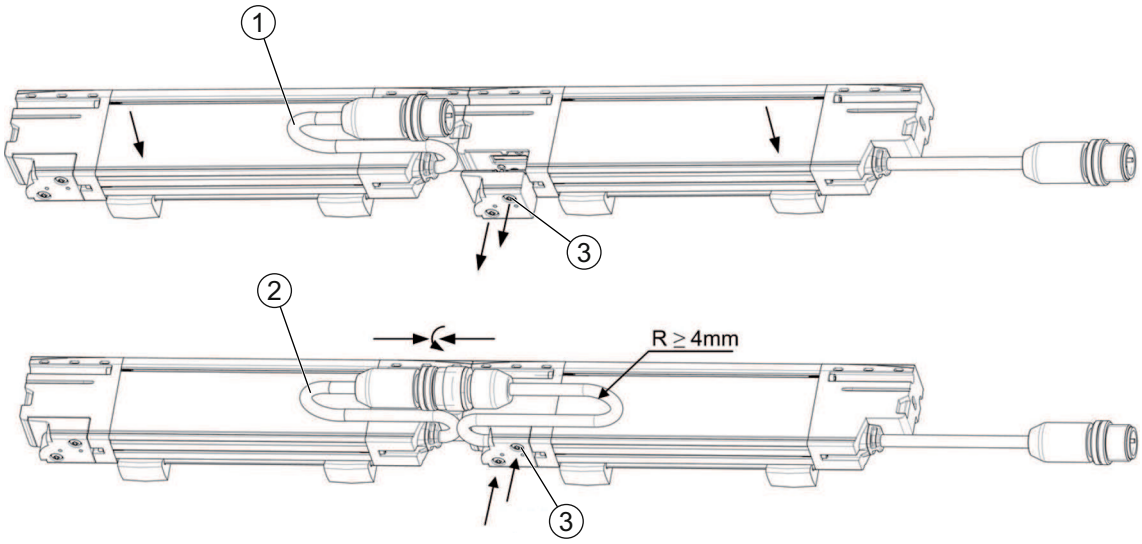

1	Terminating cable
2	Cascade cable
3	Fastening screws of the receiver

Fig. 6.11: Mounting the cascade connection

Mounting with O-shaped mounting brackets

With the cascade configurations, the resolution of the edges is 40 mm.

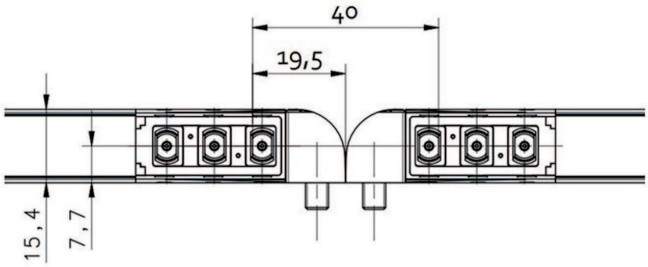

All dimensions in mm

Fig. 6.12: Mounting with O-shaped mounting brackets

Mounting with C-shaped mounting brackets

With the cascade configurations, the resolution of the edges remains at 14 mm.

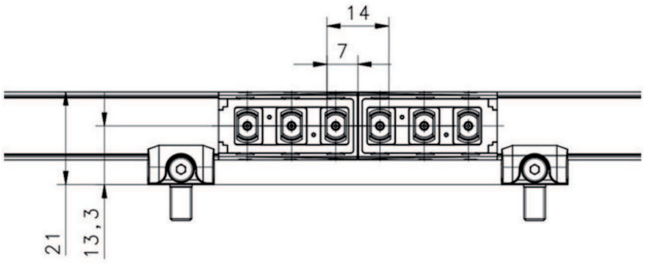

All dimensions in mm

Fig. 6.13: Mounting with C-shaped mounting brackets

Mounting with L-shaped mounting brackets

With the cascade configurations, the resolution of the edges is 26 mm.

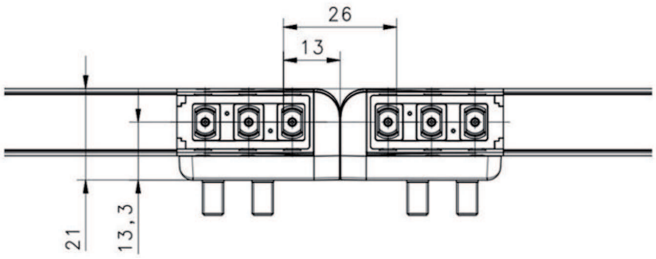

All dimensions in mm

Fig. 6.14: Mounting with L-shaped mounting brackets

Cascade with 90° resolution

When mounting the safety light curtains in the 90° cascade configuration (see chapter 3.3 "Cascading"), the resolution at the edges is 18 mm when using C-shaped mounting brackets or mounting bracket combinations that enable contact between the upper or lower front of a light curtain with the edge of the other light curtains.

For models with a resolution of 24 mm, the resolution at the edges is always retained if they have been mounted correctly with the mounting brackets included in the scope of delivery.

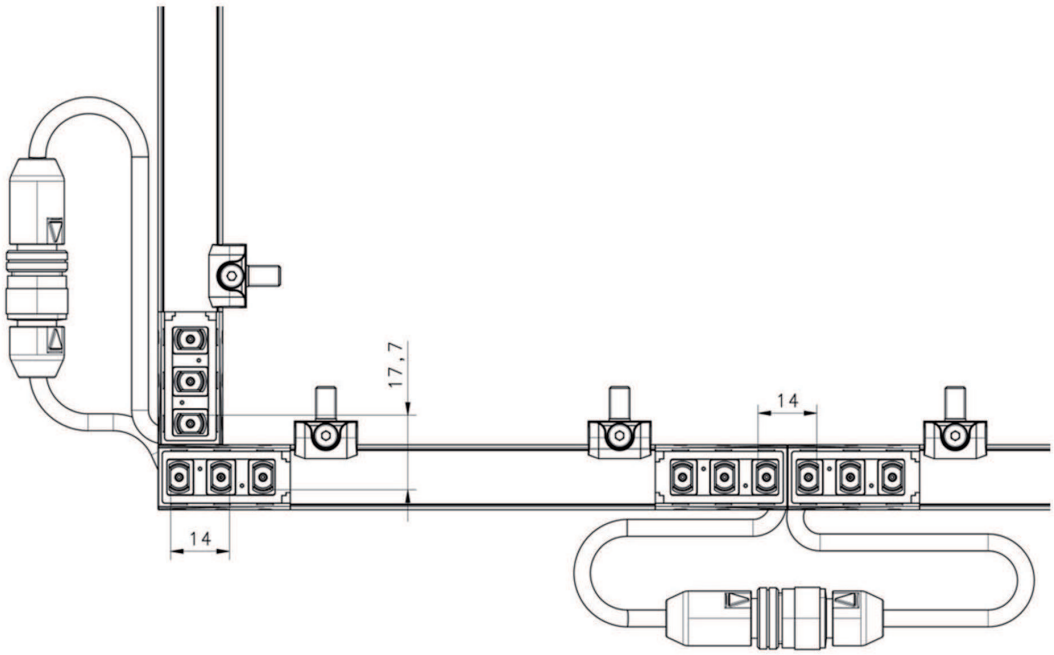

All dimensions in mm

Fig. 6.15: Cascade with 90° resolution

7 Electrical connection

WARNING

Faulty electrical connection or improper function selection may result in serious injury!

- Only allow qualified persons (see chapter 2.2 "Necessary competencies") to perform the electrical connection.
- Make sure that the connection cables are protected against overcurrent.
- For access guarding, activate the start/restart interlock and make certain that it cannot be unlocked from within the danger zone.
- Select the functions so that the safety sensor can be used as intended (see chapter 2.1 "Intended use and foreseeable misuse").
- Select the safety-relevant functions for the safety sensor (see chapter 4 "Functions").
- Always use both safety-related switching outputs OSSD1 and OSSD2 to shut down the dangerous movement.

NOTICE

SELV/PELV!

- Acc. to EN 60204-1, the external power supply must demonstrate the ability to bridge short-term mains failures of up to 20 ms. The power supply unit must ensure reliable disconnection from the mains supply (SELV/PELV).

NOTICE

Laying cables!

- Lay all connection cables and signal lines within the electrical installation space or permanently in cable ducts.
- Lay the cables and lines so that they are protected against external damages.
- For further information: see ISO 13849-2, Table D.4.

NOTICE

For special EMC stress, the use of shielded cables is recommended.

7.1 Pin assignment transmitter and receiver

7.1.1 MLC 520S transmitter

MLC 520S transmitters are equipped with a 5-pin M12 connector.

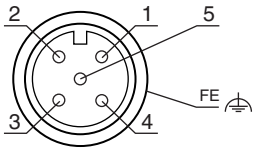

Fig. 7.1: Pin assignment transmitter

Tab. 7.1: Pin assignment transmitter

Pin	Core color (CB-M12-xx000E-5GF)	Transmitter
1	Brown	+24 V DC
2	White	RESTART SELECTION: • Bridge to pin 5: automatic restart interlock • Open and pin 5 via normally closed contact to 24 V: manual RES • Pin 2 and pin 5 open: alignment mode
3	Blue	0 V
4	Black	Not used
5	Gray	RESTART: • Bridge to pin 2: automatic restart interlock • Via normally closed contact to 24 V: manual RES • Pin 2 and pin 5 open: alignment mode
FE		FE - functional earth, shield

7.1.2 MLC 520S receiver

MLC 520S receivers are equipped with a 5-pin M12 connector.

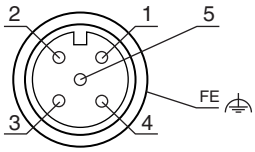

Fig. 7.2: Pin assignment receiver

Tab. 7.2: Pin assignment receiver

Pin	Core color (CB-M12-xx000E-5GF)	Receiver
1	Brown	EDM: 24 V via normally closed contact of a forced relay
2	White	OSSD1 Bridge to pin 5: EDM deselected
3	Blue	0 V
4	Black	OSSD2
5	Gray	EDM FBK/SELECTION: Bridge to pin 2: EDM deselected Via normally closed contact to 24 V: EDM active
FE		FE - functional earth, shield

8 Starting up the device

WARNING

Improper use of the safety sensor may result in serious injury!

- Make certain that the entire device and the integration of the optoelectronic protective device were inspected by qualified and instructed persons (see chapter 2.2 "Necessary competencies").
- Make certain that a dangerous process can only be started while the safety sensor is switched on.

Prerequisites:

- Safety sensor mounted (see chapter 6 "Mounting") and connected (see chapter 7 "Electrical connection") correctly
- Operating personnel were instructed in proper use
- Dangerous process is switched off, outputs of the safety sensor are disconnected, and the system is protected against being switched back on

- After start-up, check the function of the safety sensor (see chapter 9.1 "Before commissioning and following modifications").

8.1 Switching on

Requirements for the supply voltage (power supply unit):

- Reliable mains separation is ensured.
- Current reserve of at least 2 A is available.

Check operational readiness of sensor

- Check whether the LED indicators on the transmitter and receiver indicate the normal operating mode (see chapter 3.4.1 "Operation indicators on the MLC 520S transmitter/receiver").
- ⇨ The safety sensor is ready for use.

8.2 Aligning the sensor

NOTICE

Faulty or incorrect alignment may result in an operating fault!

- The alignment performed during start-up should only be performed by qualified persons (see chapter 2.2 "Necessary competencies").
- Observe the data sheets and mounting instructions of the individual components.

NOTICE

In alignment mode, the OSSDs are not active.

The safety light curtain features a system that informs the user of the quality of the alignment. In alignment mode, the LED indicator provides information on the quality and level of the alignment.

Perfect alignment is achieved when the optical axes of the first and last beam of the transmitter are aligned with the optical axes of the corresponding beams of the receiver.

For the synchronization of transmitter and receiver, the beam closest to the cable tail is used: SYNC.

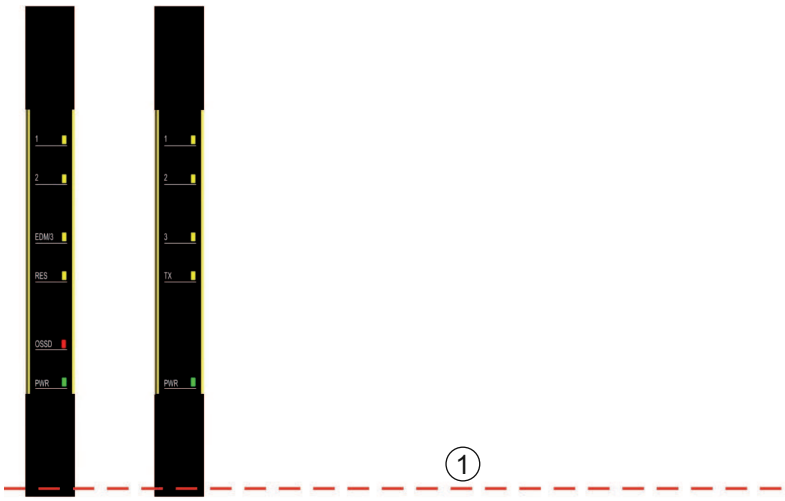

1 First optics = synchronization optics (SYNC)

Fig. 8.1: Synchronization optics

The alignment function can be called up when starting the device if the RESTART contact is kept open for at least 1 second (see chapter 7 "Electrical connection").

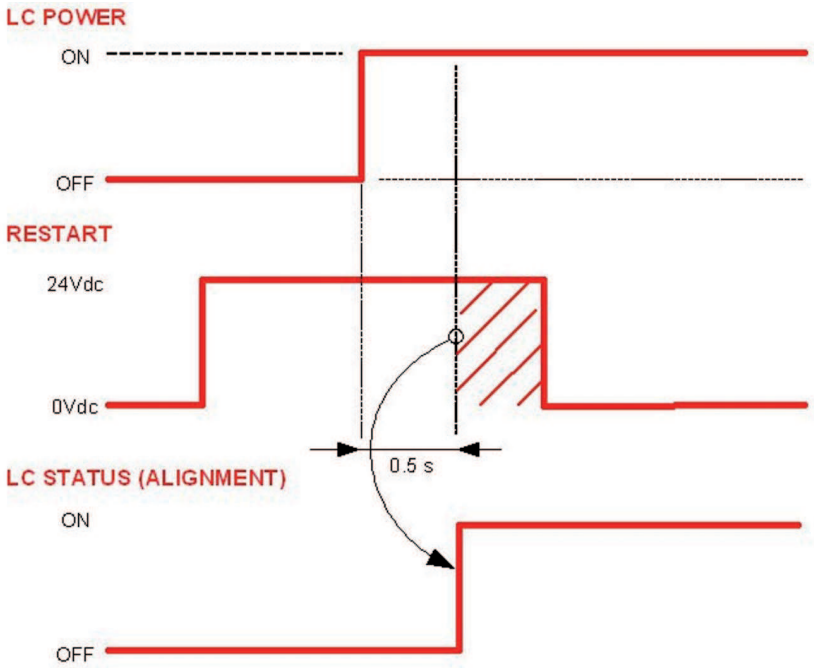

Fig. 8.2: Timer for alignment mode

In alignment mode, the LED indicator indicates the signal strength measured by the receiver.

SPECIFICATION	LED indicator BLINK INDIFFERENT OFF ON	OSSD DURING NORMAL OPERATION
NOT ALIGNED, SYNC NOT FOUND		OFF
SYNC FOUND, ONE OR MORE BEAMS INTERRUPTED		OFF
WEAK SIGNAL STRENGTH, ALL OPTICS ARE FREE		ON
MEDIUM-STRONG SIGNAL STRENGTH, ALL OPTICS ARE FREE		ON
MAXIMUM SIGNAL STRENGTH, ALL OPTICS ARE FREE		ON

- If the safety light curtain is optimally aligned, switch the transmitter and receiver off and back on again.
- Make certain that the RESTART contact is correctly connected.

8.3 Minimum distance for cascade system

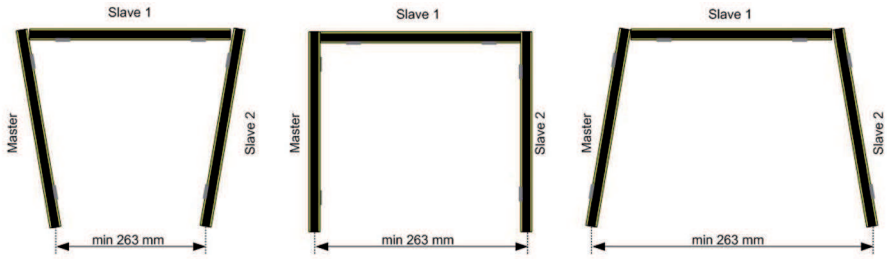

Fig. 8.3: Minimum distance for cascade system

In a cascade system with a protected area width up to 3 m, a minimum distance of 263 mm must be provided between master and slave unit 2 in order to avoid interference.

8.4 Selection of RESTART mode and operation

The interruption of a beam by a matt object results in the opening of the OSSD outputs and stopping of the safety light curtain (SAFE condition).

Resetting normal operation of the device (closing the OSSD safety contacts = condition of NORMAL OPERATION) can be implemented in two different types:

- **Automatic reset**
  After tripping, the device resumes its normal operation the moment the object is removed from the protected area.
- **Manual reset**
  After tripping, the device does not resume its normal operation until the RESTART function has been activated, with the prerequisite that the object has been removed from the protected area.

This condition, referred to as interlock, appears in the display (see chapter 3.4 "Display elements").

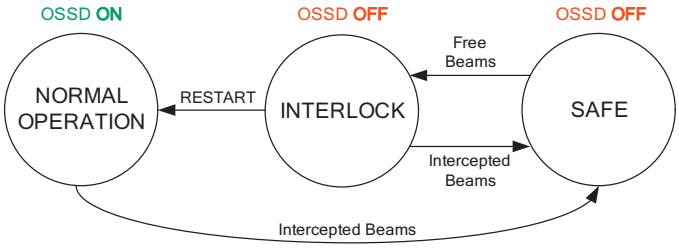

Fig. 8.4: Selection of automatic/manual reset

Select automatic or manual reset via the corresponding connection of the RESTART input and the RESTART SELECTION output of the transmitter (see chapter 7 "Electrical connection").

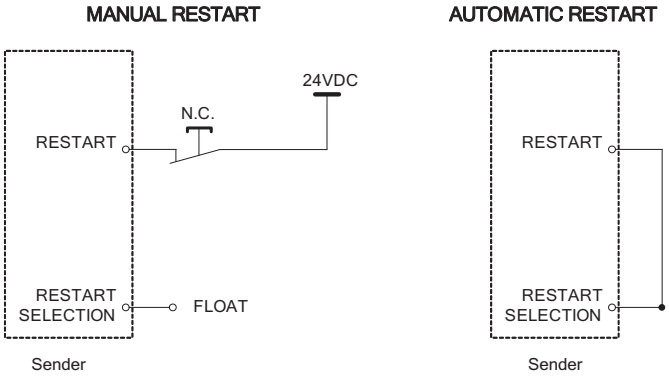

Fig. 8.5: Selection of automatic/manual reset

	NOTICE
	If manual reset is selected, do not connect RESTART SELECTION.

As soon as the choice of mode is detected by the transmitter, the receiver is always in alignment mode on start-up (see chapter 8.2 "Aligning the sensor") in order to then switch to the selected mode after the first correct alignment.

	CAUTION
	Carefully assess the risk conditions and the RESET mode! Automatic RESET mode is potentially unsafe when guarding access points in danger zones if it is possible for the user to completely pass beyond the area being monitored. ↳ Manual reset required

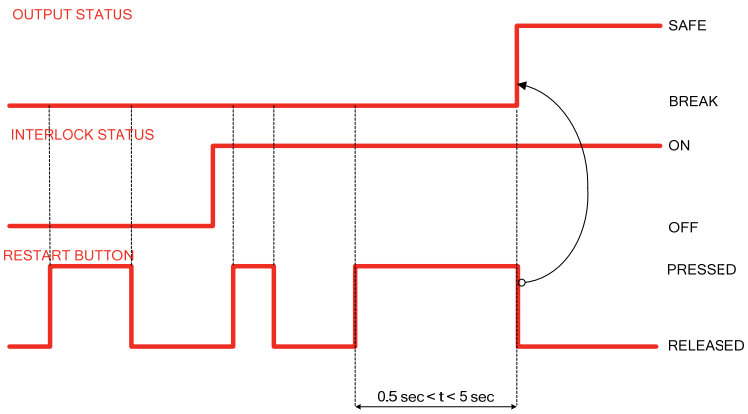

Fig. 8.6: Time of manual reset

8.5 Unlocking start/restart interlock

The reset button can be used to unlock the start/restart interlock. In this way, the responsible person can restore the ON state of the safety sensor following process interruptions (due to triggering of protective function, failure of the voltage supply).

	WARNING
	Premature unlocking of the start/restart interlock may result in serious injury! If the start/restart interlock is unlocked, the system can start up automatically. ↳ Before unlocking the start/restart interlock, make certain that no people are in the danger zone.

The LED indicator of the receiver indicates that the restart is disabled (OSSDs off) or, if RES is activated, the protective field is clear (ready to be unlocked).

- ↳ Make certain that the active protective field is clear.
- ↳ Make certain that there are no people in the danger zone.
- ↳ Press and release the reset button within 0.5 to 4 s. The receiver switches to the ON state.

9 Testing

NOTICE

- Safety sensors must be replaced at the end of their mission time (see chapter 14 "Technical data").
- Always exchange entire safety sensors.
- Observe any nationally applicable regulations regarding the tests.
- Document all tests in a comprehensible manner and include the configuration of the safety sensor along with the data for the safety- and minimum distances in the documentation.

9.1 Before commissioning and following modifications

WARNING

Unpredictable machine behavior during start-up may result in serious injury!

- Make certain that there are no people in the danger zone.

- Before they begin work, train the operators on their respective tasks. The training is the responsibility of the operating company.
- Attach notes regarding daily testing in the respective national language of the operator on the machine in a highly visible location, e.g. by printing out the corresponding chapter (see chapter 9.3 "Periodically by the operator").
- Test the electrical function and installation according to this document.

Acc. to IEC 62046 and national regulations (e.g. EU directive 2009/104/EC), tests are to be performed by competent persons (see chapter 2.2 "Necessary competencies") in the following situations:

- Prior to commissioning
- Following modifications to the machine
- After longer machine downtime
- Following retrofitting or new configuration of the machine

- As preparation, check the most important criteria for the safety sensor according to the following check-list (see chapter 9.1.1 "Checklist for integrator – to be performed prior to commissioning and following modifications"). Completing the checklist does not replace testing by competent persons (see chapter 2.2 "Necessary competencies")!
- ⇨ Not until proper function of the safety sensor is ascertained may it be integrated in the control circuit of the system.

9.1.1 Checklist for integrator – to be performed prior to commissioning and following modifications

NOTICE

Completing the checklist does not replace testing by a qualified person (see chapter 2.2 "Necessary competencies")!

- If you answer one of the items on the following check list with **no**, the machine must no longer be operated.
- IEC 62046 contains additional recommendations on testing protective devices.

Tab. 9.1: Checklist for integrator – to be performed prior to the initial start-up and following modifications

Check:	Yes	No	not applicable
Is the safety sensor operated acc. to the specific environmental conditions that are to be maintained (see chapter 14 "Technical data")?			
Is the safety sensor correctly aligned and are all fastening screws and connectors secure?			

Check:	Yes	No	not applicable
Are safety sensor, connection cables, connectors, protection caps and command devices undamaged and without any sign of manipulation?			
Does the safety sensor satisfy the required safety level (PL, SIL, category)?			
Are both safety-related switching outputs (OSSDs) integrated in the downstream machine control acc. to the required safety category?			
Are switching elements that are controlled by the safety sensor monitored according to the required safety level (PL, SIL, category) (e.g., contactors through EDM)?			
Are all points of operation near the safety sensor accessible only through the protective field of the safety sensor?			
Are the necessary additional protective devices in the immediate surroundings (e.g., safety guard) properly mounted and secured against tampering?			
If it is possible to be present undetected between the safety sensor and point of operation: is an assigned start/restart interlock functional?			
Is the command device for unlocking the start/restart interlock mounted in such a way that it cannot be reached from within the danger zone and so that the complete danger zone can be seen from the installation location?			
Has the maximum stopping time of the machine been measured and documented?			
Is the required safety distance maintained?			
Does interruption with a test object intended for this purpose cause the dangerous movement(s) to stop?			
Is the safety sensor effective during the entire dangerous movement(s)?			
Is the safety sensor effective in all relevant operating modes of the machine?			
Is start-up of dangerous movements reliably prevented if an active light beam or the protective field is interrupted with a test object intended for this purpose?			
Was the sensor detection capacity successfully tested (see chapter 9.3.1 "Checklist – periodically by the operator")?			
Were distances to reflective surfaces taken into account during configuration and no reflection bypasses subsequently detected?			
Are notices for regular testing of the safety sensor legible to the operator and are they located in a highly visible location?			
Are changes to the safety function (e.g. SPG, blanking, protective field switchover) not easy to achieve through tampering?			
Are settings that could result in an unsafe state possible only by means of key, password or tool?			
Are there incentives that pose stimulus for tampering?			
Were the operators instructed prior to starting work?			

9.2 To be performed periodically by competent persons

The reliable interaction of safety sensor and machine must be regularly tested by qualified persons (see chapter 2.2 "Necessary competencies") in order to detect changes to the machine or impermissible tampering with the safety sensor.

Acc. to IEC 62046 and national regulations (e.g., EU directive 2009/104/EC), tests of elements which are subject to wear must be performed by qualified persons (see chapter 2.2 "Necessary competencies") at regular intervals. Testing intervals may be regulated by nationally applicable regulations (recommendation acc. to IEC 62046: 6 months).

- Only allow testing to be performed by qualified persons (see chapter 2.2 "Necessary competencies").
- Observe the nationally applicable regulations and the time periods specified therein.
- As preparation, observe the checklist (see chapter 9.1 "Before commissioning and following modifications").

9.3 Periodically by the operator

The function of the safety sensor must be checked depending on the given risk according to the following checklist so that damages or prohibited tampering can be detected.

Depending on the risk assessment, the test cycle must be defined by the integrator or operating company (e.g., daily, on shift changes, ...) or is specified by national regulations or regulations of the employer's liability insurance association and may be dependent on the machine type.

Due to complex machines and processes, it may be necessary under certain circumstances to check some points at longer time intervals. Observe the classification in “Test at least” and “Test when possible”.

	NOTICE
	For larger distances between transmitter and receiver and when using deflecting mirrors, a second person may be necessary.

	WARNING
	Unpredictable machine behavior during the test may result in serious injury! - Make certain that there are no people in the danger zone. - Before they begin work, train the operators on their respective tasks and provide suitable test objects and an appropriate test instruction.

9.3.1 Checklist – periodically by the operator

	NOTICE
	- If you answer one of the items on the following check list with **no**, the machine must no longer be operated.

Tab. 9.2: Checklist – regular function test by trained operators/persons

Test at least:	Yes	No
Are safety sensor and connectors securely mounted and free of obvious signs of damage, changes or tampering?		
Were no obvious changes made to access or entry possibilities?		
Test the effectiveness of the safety sensor: • The LED 1 on the safety sensor must illuminate green (see chapter 3.4.1 "Operation indicators on the MLC 520S transmitter/receiver"). • Interrupt an active beam or the protective field (see figure) with a suitable, opaque test object: 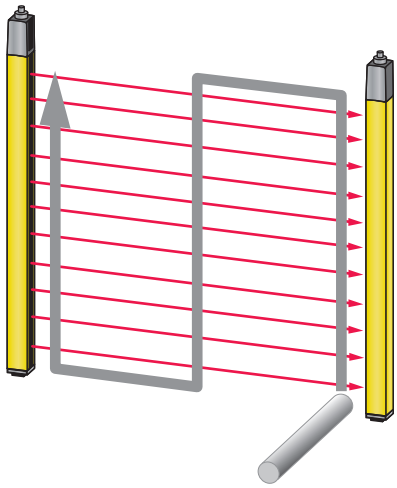 Checking the protective field function with test rod (only for safety light curtains with a resolution of 14 … 40 mm). For light curtains with different resolution ranges, this check is to be performed separately for each resolution range. • Does the OSSD LED on the receiver illuminate constantly red while the protective field is interrupted?		

When possible, test during running operation:	Yes	No
Protective device with approach function: during machine operation, the protective field is interrupted with the test object – are the obviously dangerous machine parts stopped without noticeable delay?		
Protective device with presence detection: the protective field is interrupted with the test object – does this prevent operation of the obviously dangerous machine parts?		

10 Maintenance

	NOTICE
!	**Faulty operation if transmitter and receiver are soiled!** The surfaces of the front screen of transmitters, receivers and, where applicable, deflecting mirror must not be scratched or roughened at the positions where beams enter and exit. ↳ Do not use chemical cleaners.

Prerequisites for cleaning:

- The system is safely shut down and protected against restart.

↳ Clean the safety sensor periodically depending on the degree of contamination.

	NOTICE
!	**Prevent electrostatic charging of the front screens!** ↳ To clean the front screens of transmitter and receiver, use only damp cloths.

11 Troubleshooting

11.1 What to do in case of failure?

After switching the safety sensor on, the display elements (see chapter 3.4 "Display elements") assist in checking the correct functionality and in faultfinding.

In case of error, you can determine the error from the LED displays. With the error message you can determine the cause of the error and initiate measures to rectify it.

NOTICE	
	If the safety sensor responds with an error display, you will often be able to eliminate the cause yourself! ↳ Switch off the machine and leave it switched off. ↳ Analyze and eliminate the cause of the fault using the following table. ↳ If you are unable to rectify the fault, contact the Leuze electronic branch responsible for you or call the Leuze electronic customer service (see chapter 13 "Service and support").

11.2 Operating indicator of the LEDs

Tab. 11.1: LED indicators at the transmitter - causes and measures

Operating mode	Specification	LED indicator BLINK INDIFFERENT OFF ON	Measure
NORMAL OPERATION	EMISSION		
LOCKOUT ERROR	F1: Microprocessor error		Internal error Check the operating conditions and any possible cause of electrical interference, then switch the device off and back on again (see chapter 14 "Technical data").
	F2: Optics error		Optical scan error. Check any possible cause of electrical interference, then switch the device off and back on again.
	F12: Cascade error		Cascade communication error. Check the cascade connection or the mounting of the terminator (see chapter 6.3.2 "Mounting cascading")
	F13: Reset error		Reset error. Check the connection of the RESTART SELECTION pin (see chapter 8.4 "Selection of RESTART mode and operation").

Tab. 11.2: LED indicators at the receiver - causes and measures

Operating mode	Specification	LED indicator (BLINK / INDIFFERENT / OFF / ON)	Measure
ALIGNMENT	Not aligned, SYNC not occupied		Align device (see chapter 8.2 "Aligning the sensor"). Follow the instructions for implementing the correct alignment process or connect the RESTART input on the transmitter to switch to the normal operating mode (see chapter 8.4 "Selection of RESTART mode and operation").
	Medium-strong signal strength, SYNC occupied		
	Maximum signal strength		
NORMAL OPERATION ONLY MANUAL RESET	Interlock, free beams		Press the RESTART button for at least 0.5 seconds to restart the device in the normal operating mode
NORMAL OPERATION	OSSD ON		Normal operating mode
	OSSD OFF		Safety status Remove all obstacles or correctly align the device
	EDM active		EDM function enabled

Operating mode	Specification	LED indicator BLINK INDIFFERENT OFF ON	Measure
LOCKOUT ERROR	F1: Microprocessor error		Internal error. Check the operating conditions and any possible cause of electrical interference. Switch the device off and back on again (see chapter 14 "Technical data").
	F2: Optics error		Optical scanning error. Check any possible cause of optical and electrical interference. Switch the device off and back on again.
	F3: EDM error		EDM error. Check the wiring and check for contactor faults, then switch the device off and on again (see chapter 4.2 "EDM contactor monitoring").
	F12: Cascade error		Cascade communication error. Check the cascade connection or the mounting of the terminator (see chapter 6.3.2 "Mounting cascading").
	F13: Reset error		Restart function error. Check the connection of the restart button and any possible cause of optical interference, then switch the device off and back on again.
	F23: OSSD error		Error at safety outputs. Check that the connection is correct and any possible cause of electrical interference, then switch the device off and back on again (see chapter 7 "Electrical connection").
	Supply error		Check that the connection is correct (see chapter 7 "Electrical connection").

12 Disposing

↳ For disposal observe the applicable national regulations regarding electronic components.

13 Service and support

24-hour on-call service at:
+49 7021 573-0

Service hotline:
+49 7021 573-123

E-mail:
service.protect@leuze.de

Return address for repairs:
Servicecenter
Leuze electronic GmbH + Co. KG
In der Braike 1
D-73277 Owen/Germany

14 Technical data

14.1 General specifications

Tab. 14.1: Protective field data

Physical resolution [mm]	Operating range [m]		Protective field height [mm]	
	min.	max.	min.	max.
14	0.2	6	150	1200
24	0.2	6	150	1200

Tab. 14.2: Safety-relevant technical data

Type in accordance with IEC 61496	Type 4
SIL in accordance with IEC 61508	SIL 3
SILCL in accordance with IEC 62061	SILCL 3
Performance Level (PL) in accordance with ISO 13849-1	PL e
Category in accordance with ISO 13849-1	Cat. 4
Average probability of a failure to danger per hour (PFH_d)	2.64×10^{-9} 1/h
Mission time (T_M)	20 years

Tab. 14.3: General system data

Connection technology	M12, 5-pin (transmitter) M12, 5-pin (receiver)
Supply voltage U_v, transmitter and receiver	+24 V, ± 20 %
Residual ripple of the supply voltage	± 5 % within the limits of U_v
Current consumption - transmitter	55 mA
Current consumption receiver	145 mA (without load)
Synchronization	Optical between transmitter and receiver
Protection class	III
Degree of protection	IP 65
Ambient temperature, operation	-10 … +55 °C
Ambient temperature, storage	-25 … 70 °C
Relative humidity (non-condensing)	15 … 95 %
Vibration resistance	50 m/s^2 acceleration, 10 - 55 Hz in acc. with IEC 60068-2-6; 0.35 mm amplitude
Shock resistance	98.1 m/s^2 acceleration, 16 ms acc. to IEC 60068-2-29, 1000 impacts per spatial axis
Profile cross section	15.4 mm x 32.6 mm
Dimensions	see chapter 14.2 "Dimensions, weight, response time"
Weight	see chapter 14.2 "Dimensions, weight, response time"

Tab. 14.4: System data - transmitter

Transmitter diodes, class in accordance with IEC 60825-1	1
Wavelength	850 nm (infrared)

Tab. 14.5: System data receiver, indication signals and control signals

Pin	Signal	Type	Electrical data
1	RES/STATE	Input: Output:	Against +24 V: 15 mA Against 0 V: 80 mA
3	EDM	Input:	Against 0 V: 15 mA
4	RES	Input:	Against 24 V: 15 mA

Tab. 14.6: Technical data of the electronic safety-related switching outputs (OSSDs) on the receiver

Safety-related PNP transistor outputs (short-circuit monitored, cross-circuit monitored)	Minimum	Typical	Maximum
Switching voltage high active (U_v - 1.5V)	18 V	22.5 V	27 V
Switching voltage low		0 V	+2.5 V
Switching current		200 mA	300 mA
Residual current		<2 µA	200 µA In the event of a failure (if the 0 V cable is interrupted), each of the outputs behaves as a 120 kΩ resistor to U_v. A downstream safety PLC must not detect this as a logical “1”.
Load capacity			1 µF
Load inductivity			2 H
Permissible wire resistance for load			<200 Ω Note the additional restrictions due to cable length and load current.
Permissible wire cross section		0.25 mm^2	
Permissible cable length between receiver and load			20 m
Test pulse width		100 µs	

NOTICE

The safety-related transistor outputs perform the spark extinction. With transistor outputs, it is therefore neither necessary nor permitted to use the spark extinction circuits recommended by contactor or valve manufacturers (RC elements, varistors or recovery diodes), since these considerably extend the decay times of inductive switching elements.

Tab. 14.7: Patents

US patents	US 6,418,546 B

14.2 Dimensions, weight, response time

Dimensions, weight and response time are dependent on

- the resolution
- the length

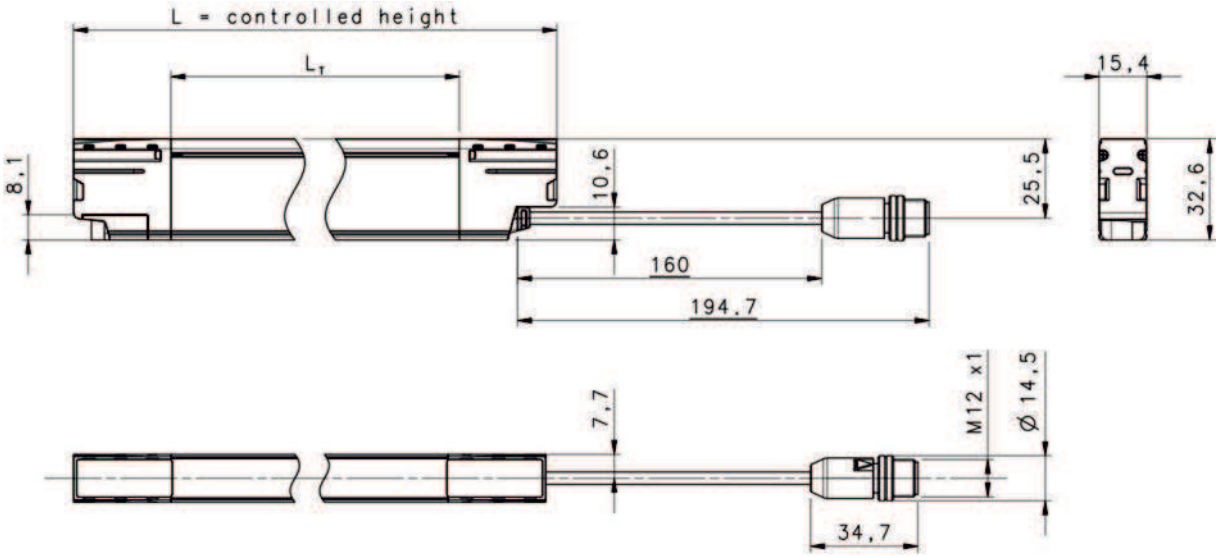

All dimensions in mm

L Length/protective field height (controlled height)

L_T Profile length

Fig. 14.1: Dimensions of transmitter and receiver

Tab. 14.8: Protective field height, number of beams and response time

Protective field height	Resolution 14 mm		Resolution 24 mm	
	Number of beams	Response time	Number of beams	Response time
150	15	7	8	7
210	21	8	11	7
270	27	8	14	8
300	30	8	16	8
330	33	9	17	8
360	36	9	19	8
390	39	10	20	8
420	42	10	22	9
450	45	10	24	9
480	48	10	25	9
510	51	11	27	9
540	54	11	28	9
570	57	11	30	9
600	60	11	32	9
630	63	12	33	10
660	66	12	35	10
690	69	13	36	10
720	72	13	38	10

Protective field height	Resolution 14 mm		Resolution 24 mm	
	Number of beams	Response time	Number of beams	Response time
750	75	13	40	10
780	78	13	41	10
810	81	14	43	11
840	84	14	44	11
870	87	14	46	11
900	90	14	48	11
930	93	15	49	11
960	96	15	51	11
990	99	16	52	12
1020	102	16	54	12
1050	105	16	56	12
1080	108	16	57	12
1110	111	17	59	12
1140	114	17	60	12
1170	117	17	62	13
1200	120	17	64	13

Transmitter/receiver weight

P [g] = L [mm] x 5 + 50

Example:

Length/protective field height L = 1200 mm

Weight P = 6050 g

14.3 Dimensioned drawings: Accessories

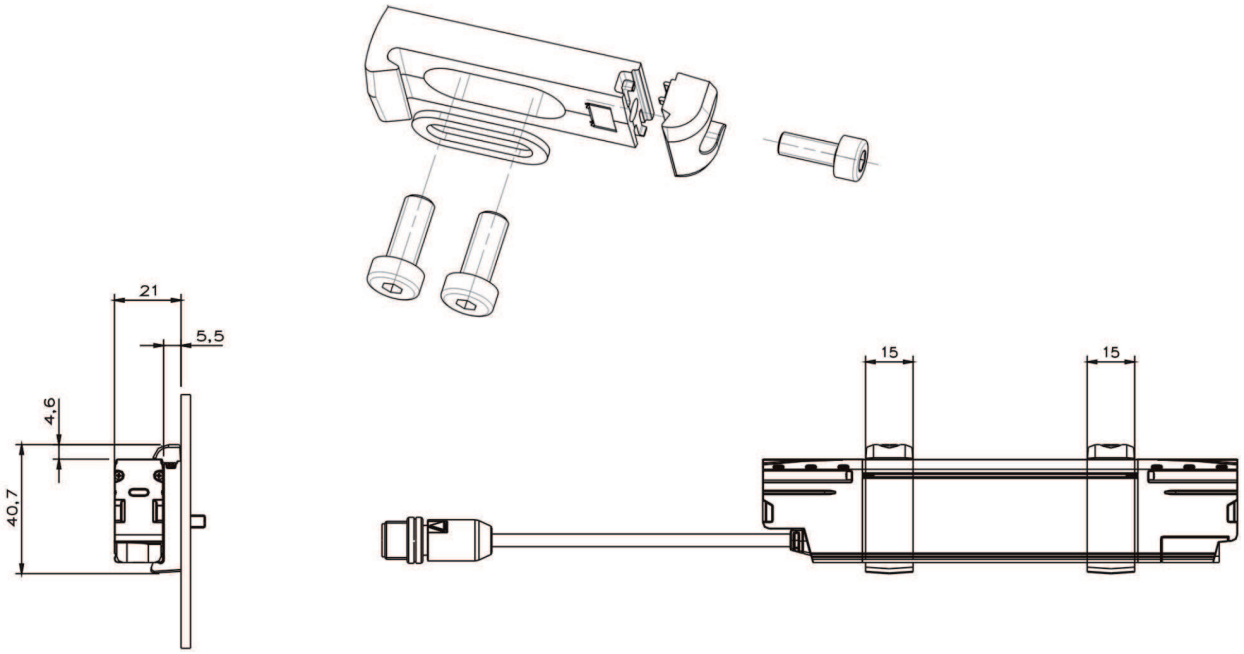

All dimensions in mm

Fig. 14.2: C-shaped mounting bracket

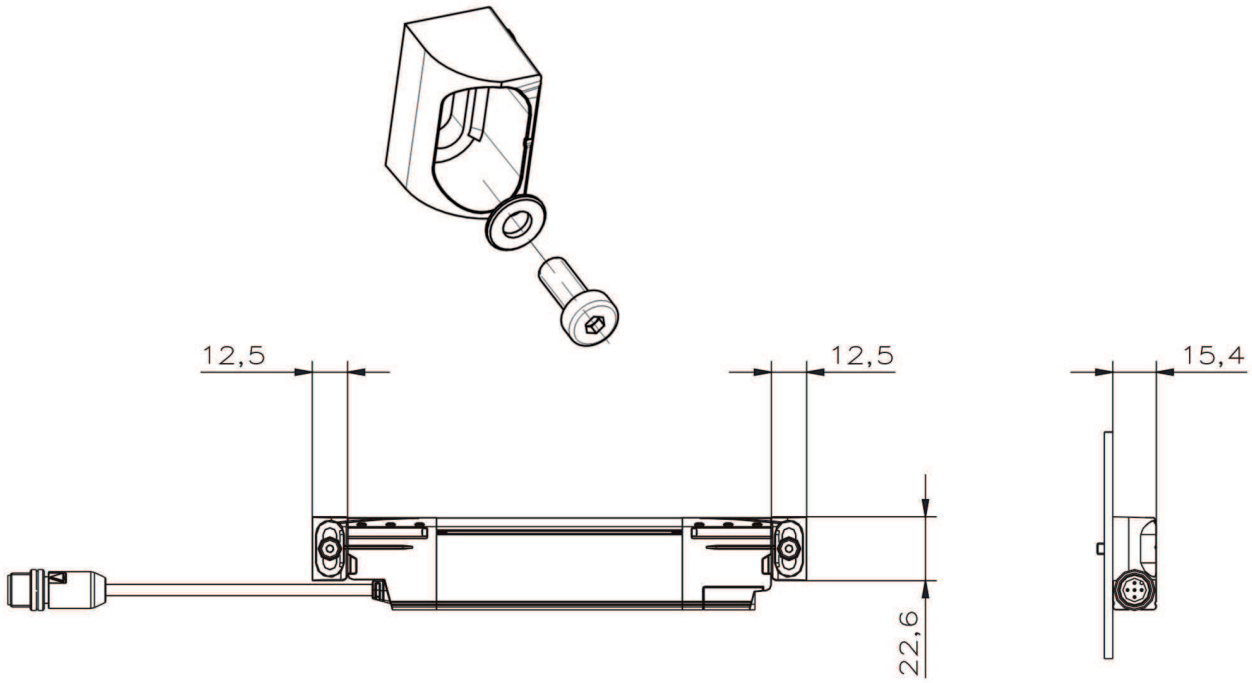

All dimensions in mm

Fig. 14.3: O-shaped mounting bracket

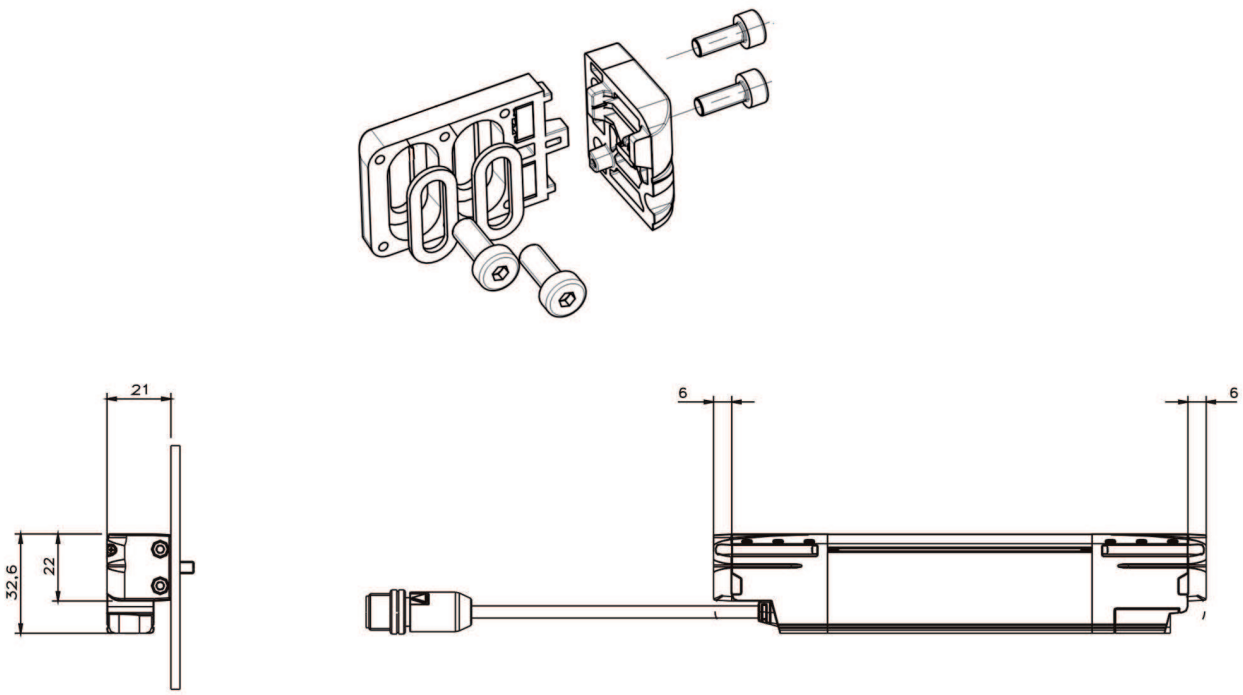

All dimensions in mm

Fig. 14.4: L-shaped mounting bracket

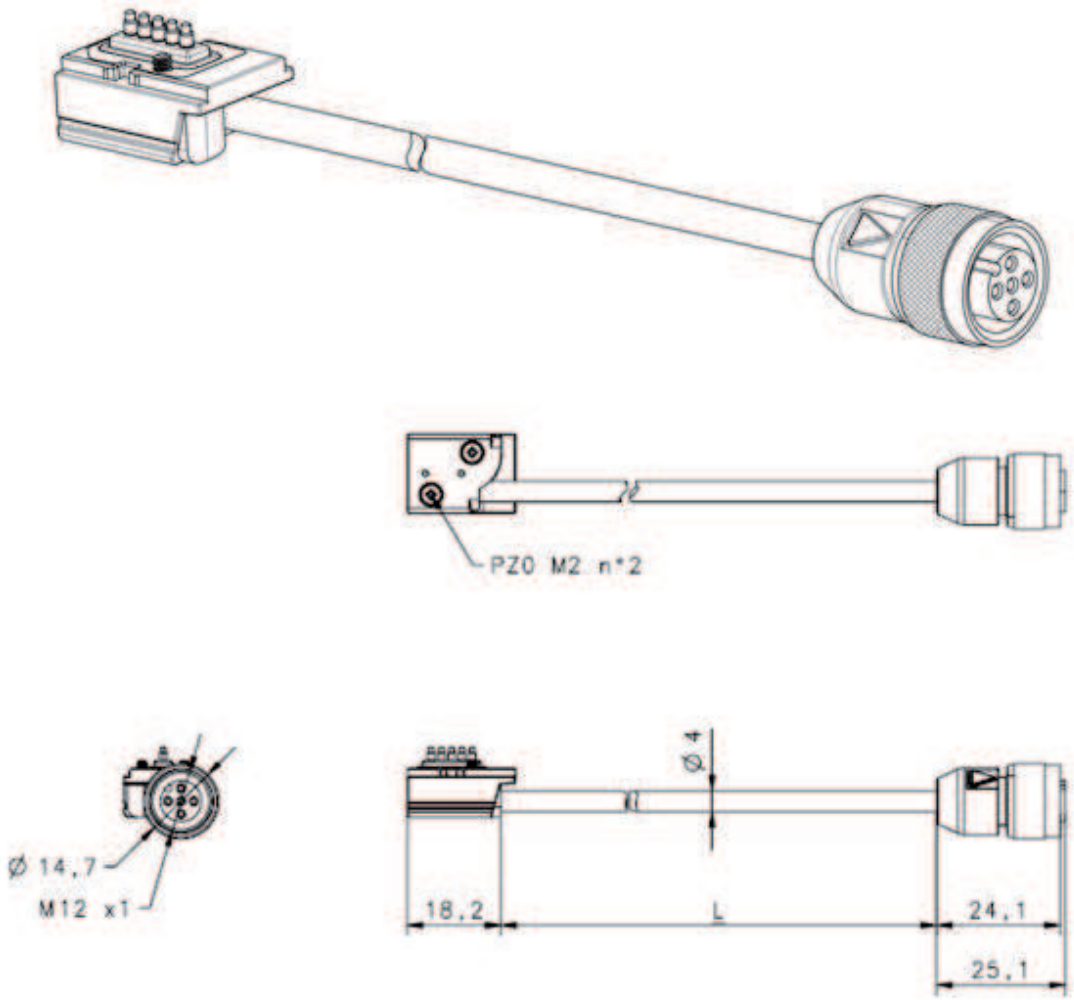

All dimensions in mm

Fig. 14.5: Cascade cable

15 Order guide and accessories

Nomenclature

Part designation:

MLCxxx-ooo-aa-hhhh

Tab. 15.1: Part number code

MLC	Safety sensor
xxx	Series: 520 for MLC 520S
aa	Resolution: 14: 14 mm 24: 24 mm
hhhh	Protective field height: 150 … 1200: from 150 mm to 1200 mm
ooo	Option: S: Slimline version

Tab. 15.2: Part descriptions, examples

Examples for part designation	Properties
MLC520-S-14-600	Transmitter/receiver, resolution 14 mm, protective field height 600 mm
MLC520-S-24-900	Transmitter/receiver, resolution 24 mm, protective field height 900 mm

Scope of delivery

- Transmitter unit
- Receiver unit
- 1 set with 4 mounting brackets, model BT-MLC-S-O
- 2 sets with 2 mounting brackets, model BT-MLC-S-C (additional set is required for protective field lengths of 600 mm and longer)

Tab. 15.3: Part numbers of MLC 520S transmitter/receiver depending on resolution and protective field height

Protective field height hhhh [mm]	14 mm MLC520-S-14-hhhh	24 mm MLC520-S-24-hhhh
150	68601015	68602015
210	68601021	68602021
270	68601027	68602027
300	68601030	68602030
330	68601033	68602033
360	68601036	68602036
390	68601039	68602039
420	68601042	68602042
450	68601045	68602045
480	68601048	68602048
510	68601051	68602051
540	68601054	68602054
570	68601057	68602057
600	68601060	68602060
630	68601063	68602063
660	68601066	68602066
690	68601069	68602069
720	68601072	68602072
750	68601075	68602075
780	68601078	68602078
810	68601081	68602081
840	68601084	68602084
870	68601087	68602087
900	68601090	68602090
930	68601093	68602093
960	68601096	68602096
990	68601099	68602099
1020	68601102	68602102
1050	68601105	68602105
1080	68601108	68602108
1110	68601111	68602111
1140	68601114	68602124
1170	68601117	68602117
1200	68601120	68602120

Tab. 15.4: Accessories

Part no.	Article	Description
Connection cables for MLC 520S transmitter/receiver, unshielded		
50133841	KD U-M12-5A-P1-050	Connection cable, 5-pin, 5 m long
50132534	KD U-M12-5A-P1-100	Connection cable, 5-pin, 10 m long
429088	CB-M12-15000-5GF	Connection cable, 5-pin, 15 m long
429089	CB-M12-25000-5GF	Connection cable, 5-pin, 25 m long
429281	CB-M12-50000-5GF	Connection cable, 5-pin, 50 m long
Mounting technology		
424440	BT-MLC-S-C	C-shaped mounting brackets, 2x
424441	BT-MLC-S-L	L-shaped mounting brackets, 2x
424442	BT-MLC-S-O	O-shaped mounting brackets, 4x
50137531	CB-M12-MLC-S-100-5TP	Cascade cable, L = 0.1 m
50137532	CB-M12-MLC-S-500-5TP	Cascade cable, L = 0.5 m
50137533	CB-M12-MLC-S-1000-5TP	Cascade cable, L = 1 m
Deflecting mirror		
529601	UM60-150	Deflecting mirror, mirror length 210 mm
529603	UM60-300	Deflecting mirror, mirror length 360 mm
529604	UM60-450	Deflecting mirror, mirror length 510 mm
529606	UM60-600	Deflecting mirror, mirror length 660 mm
529607	UM60-750	Deflecting mirror, mirror length 810 mm
529609	UM60-900	Deflecting mirror, mirror length 960 mm
529610	UM60-1050	Deflecting mirror, mirror length 1110 mm
529612	UM60-1200	Deflecting mirror, mirror length 1260 mm
430105	BT-2UM60	Mounting bracket for UM60, 2x
Test rods		
430414	AC-TR14-S	Test rod 14 mm
430424	AC-TR24-S	Test rod 24 mm

16 EU/EC Declaration of Conformity

Leuze electronic

the sensor people

EU-/EG-KONFORMITÄTS-ERKLÄRUNG	EU/EC DECLARATION OF CONFORMITY	DECLARATION UE/CE DE CONFORMITE
Hersteller:	Manufacturer:	Constructeur:
	Leuze electronic GmbH + Co. KG In der Braike 1, PO Box 1111 73277 Owen, Germany	
Produktbeschreibung:	Description of product:	Description de produit:
Sicherheits- Lichtvorhang, Berührungslos wirkende Schutzeinrichtung, Sicherheitsbauteil nach 2006/42/EG Anhang IV MLC 520-S Seriennummer siehe Typschild	**Safety Light Curtain, Active opto-electronic protective device, safety component in acc. with 2006/42/EC annex IV MLC 520-S Serial no. see name plates**	**Barrière immatérielle de sécurité, Equipement de protection électrosensible, Elément de sécurité selon 2006/42/CE annexe IV MLC 520-S N° série voir plaques signalétiques**
Die alleinige Verantwortung für die Ausstellung dieser Konformitätserklärung trägt der Hersteller.	This declaration of conformity is issued under the sole responsibility of the manufacturer.	La présente déclaration de conformité est établie sous la seule responsabilité du fabricant.
Der oben beschriebene Gegenstand der Erklärung erfüllt die einschlägigen Harmonisierungsrechts-vorschriften der Union:	The object of the declaration described above is in conformity with the relevant Union harmonisation legislation:	L'objet de la déclaration décrit ci-dessus est conforme à la législation d'harmonisation de l'Union applicable:
Angewandte EU-/EG-Richtlinie(n):	Applied EU/EC Directive(s):	Directive(s) UE/CE appliquées:
2014/30/EU 2006/42/EG (*1)	**2014/30/EU 2006/42/EC (*1)**	**2014/30/UE 2006/42/CE (*1)**

Angewandte harmonisierte Normen / Applied harmonized standards / Normes harmonisées appliquées:

EN 61496-1:2013+AC:2015 (*1) EN 61000-6-2:2005	**EN ISO13849-1:2015 (*1) EN 55022:2010**	**EN 62061:2005+A2:2015 (*1)**

Angewandte technische Spezifikationen / Applied technical specifications / Spécifications techniques appliquées:

EN 61496-2:2013 (*1)	**EN 61508-1/2/3/4:2010 (*1)**	**EN 50178:1997**

Notified Body

(*1) TÜV SÜD Product Service GmbH, Ridlerstrasse 65, D-80339 München, NB0123, Z10 17 10 68636 030

Dokumentationsbevollmächtigter ist der genannte Hersteller, Kontakt: quality@leuze.de.

Authorized for documentation is the stated manufacturer, contact: quality@leuze.de.

Autorisé pour documentation est le constructeur déclaré, contact: quality@leuze.de

2014/30/EU veröffentlicht: 29.03.2014, EU-Amtsblatt Nr. L 96/79-106; 2014/30/EU published: 29.03.2014, EU-Journal No. L 96/79-106; 2014/30/UE publié: Journal EU n° L 96/79-106

Leuze electronic GmbH + Co. KG
In der Braike 1
D-73277 Owen
Telefon +49 (0) 7021 573-0
Telefax +49 (0) 7021 573-199
info@leuze.de
www.leuze.com

Leuze electronic GmbH + Co. KG, Sitz Owen, Registergericht Stuttgart, HRA 230712
Persönlich haftende Gesellschafterin Leuze electronic Geschäftsführungs-GmbH, Sitz Owen, Registergericht Stuttgart, HRB 230550
Geschäftsführer: Ulrich Balbach
USt.-IdNr. DE 145912521 | Zollnummer 2554232
Es gelten ausschließlich unsere aktuellen Verkaufs- und Lieferbedingungen
Only our current Terms and Conditions of Sale and Delivery shall apply

LEO-ZQM-148-07-FO

SMART SENSOR BUSINESS