Leuze electronic

the sensor people

SMART
SENSOR
BUSINESS

# DCR 248i

## Camera-based code reader

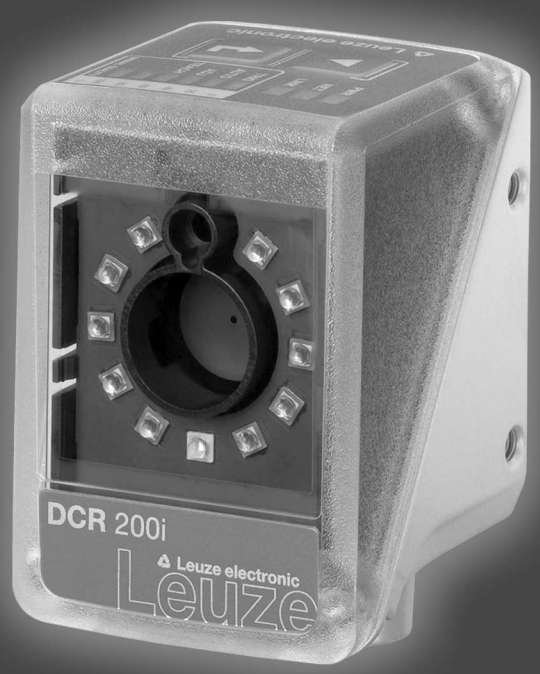


EN 2017/08 - 50135643
We reserve the right to
make technical changes

Original operating instructions

ПРОМЭЛЕКТРОНИКА / sales@prom-elec.com

© 2017
Leuze electronic GmbH & Co. KG
In der Braike 1
D-73277 Owen / Germany
Phone: +49 7021 573-0
Fax: +49 7021 573-199
http://www.leuze.com
info@leuze.de

1 About this document ... 6
1.1 Used symbols and signal words ... 6
2 Safety ... 8
2.1 Intended use ... 8
2.2 Foreseeable misuse ... 8
2.3 Competent persons ... 9
2.4 Disclaimer ... 9
3 Device description ... 10
3.1 Device overview ... 10
3.1.1 About the DCR 200i code reader ... 10
3.1.2 Performance characteristics ... 10
3.1.3 Accessories ... 11
3.2 Device construction ... 12
3.3 Connection technology ... 13
3.4 Indicators and operational controls ... 13
3.4.1 LED indicators ... 14
3.4.2 Bar graph display ... 15
3.4.3 Control buttons ... 16
4 Functions ... 17
4.1 Camera operating modes ... 17
4.1.1 Single trigger mode ... 17
4.1.2 Reading gate control ... 17
4.1.3 Burst mode ... 17
4.1.4 Presentation mode ... 18
4.1.5 Continuous mode ... 18
4.2 Reference code comparison ... 18
4.3 Code quality ... 19
4.4 Leuze webConfig tool ... 20
5 Applications ... 21
5.1 Reading of 1D-codes ... 21
5.2 Reading of 2D-codes ... 22
5.3 Code reading with polarization filter ... 22
5.4 Code reading with diffusor foil ... 23
6 Mounting ... 24
6.1 Determining the mounting position of the code reader ... 24
6.1.1 Selecting a mounting location ... 24
6.1.2 Avoiding total reflection ... 25
6.1.3 Determining the reading distance ... 25
6.2 Mounting the code reader ... 28
6.2.1 Mounting with M4 fastening screws ... 28
6.2.2 Mounting with the BTU 320M-D12 mounting system ... 28
6.2.3 Mounting with the BT 320M mounting bracket ... 29
6.2.4 Mounting with the BTU 320M-D12-RL70 mounting bracket ... 29
6.3 Replace housing hood ... 29
6.4 Attaching the diffusor foil ... 30

**7 Electrical connection ... 32**

7.1 Overview ... 33
7.2 PWR / SWIO – voltage supply / RS 232/RS 422 / switching inputs/outputs ... 33
7.3 HOST - Host input / Ethernet / PROFINET ... 36
7.4 Ethernet star topology ... 36
7.5 Cable lengths and shielding ... 38
7.6 Connecting code reader to fieldbus ... 38
7.7 Connecting code reader to MA 150 connection unit ... 38

**8 Starting up the device – Basic configuration ... 40**

8.1 Measures to be performed prior to the initial commissioning ... 40
8.2 Starting the device ... 40
8.3 Setting the communication parameters ... 41
8.3.1 Manually setting the IP address ... 41
8.3.2 Automatically setting the IP address ... 42
8.3.3 Address Link Label ... 42
8.3.4 Ethernet host communication ... 43
8.3.5 RS 232/RS 422 communication ... 44
8.3.6 FTP client ... 44
8.4 Configuration via configuration codes ... 44
8.5 Activating device functions ... 44
8.6 Performing further settings ... 46
8.6.1 Decoding and processing the read data ... 46
8.6.2 Control of the decoding ... 46
8.6.3 Activating camera operating mode ... 47
8.6.4 Control of the switching outputs ... 47
8.6.5 Optimizing reading performance ... 47
8.6.6 Transfer configuration data ... 48

**9 Commissioning – Leuze electronic webConfig tool ... 49**

9.1 System requirements ... 49
9.2 Start webConfig tool ... 49
9.3 Short description of the webConfig tool ... 50
9.3.1 Change operating mode ... 51
9.3.2 Menu options of the webConfig tool ... 51
9.3.3 CONFIGURATION menu ... 52
9.3.4 Configuring applications with the wizard ... 53

**10 PROFINET ... 54**

10.1 Overview ... 54
10.2 GSDML file ... 54
10.3 Configuring for the Siemens SIMATIC-S7 control ... 55
10.4 PROFINET project modules ... 59
10.4.1 Overview of the modules ... 59
10.4.2 Module 10 – Activation ... 61
10.4.3 Module 13 – Fragmented result ... 62
10.4.4 Module 16 – Fragmented entry ... 63
10.4.5 Module 21 – Result data 1 ... 63
10.4.6 Module 22 – Result data 2 ... 64
10.4.7 Module 23 – Result data 3 ... 65
10.4.8 Module 24 – Result data 4 ... 66
10.4.9 Module 25 – Result data 5 ... 67
10.4.10 Module 26 – Result data 6 ... 68
10.4.11 Module 27 – Result data 7 ... 69
10.4.12 Module 28 – Result data 8 ... 70

10.4.13 Module 101 – Entry data 1 ... 71
10.4.14 Module 102 – Entry data 2 ... 73
10.4.15 Module 103 – Entry data 3 ... 74
10.4.16 Module 104 – Entry data 4 ... 75
10.4.17 Module 105 – Entry data 5 ... 77
10.4.18 Module 106 – Entry data 6 ... 78
10.4.19 Module 107 – Entry data 7 ... 79
10.4.20 Module 108 – Entry data 8 ... 81
10.4.21 Module 60 - Device status and control ... 82
10.4.22 Module 61 - Device application status and control ... 83
10.4.23 Module 74 – I/O status and control ... 83

**11 Interfaces – Communication ... 87**

11.1 Online commands ... 87
11.1.1 Overview of commands and parameters ... 87
11.1.2 General online commands ... 87
11.1.3 Online commands for system control ... 92

11.2 XML-based communication ... 92

**12 Care, maintenance and disposal ... 93**

**13 Diagnostics and troubleshooting ... 94**

**14 Service and support ... 95**

14.1 What to do should servicing be required? ... 95

**15 Technical data ... 96**

15.1 General specifications ... 96

15.2 Optical data ... 97
15.2.1 Reading performance ... 97
15.2.2 Code specifications ... 97

15.3 Dimensioned drawings ... 98

15.4 Dimensioned drawings - Accessories ... 98

**16 Order guide and accessories ... 102**

16.1 Nomenclature ... 102

16.2 Type overview ... 102

16.3 Optical accessories ... 103

16.4 Cables accessories ... 103

16.5 Other accessories ... 104

**17 EC Declaration of Conformity ... 106**

**18 Appendix ... 107**

18.1 ASCII character set ... 107

18.2 Code samples ... 110

18.3 Configuration via configuration codes ... 112

18.4 License terms ... 113

18.5 Communication examples ... 114

# 1 About this document

## 1.1 Used symbols and signal words

Tab. 1.1: Warning symbols and signal words

| | |
|---|---|
| ⚠ | Symbol indicating dangers to persons |
| **NOTE** | Signal word for property damage<br>Indicates dangers that may result in property damage if the measures for danger avoidance are not followed. |
| **CAUTION** | Signal word for minor injuries<br>Indicates dangers that may result in minor injury if the measures for danger avoidance are not followed. |

Tab. 1.2: Other symbols

| | |
|---|---|
| ℹ | Symbol for tips<br>Text passages with this symbol provide you with further information. |
| ↳ | Symbol for action steps<br>Text passages with this symbol instruct you to perform actions. |

Tab. 1.3: Terms and abbreviations

| | |
|---|---|
| CMOS | Semiconductor process for implementing integrated circuits<br>(**C**omplementary **M**etal-**O**xide-**S**emiconductor) |
| DCR | Camera-based code reader<br>(**D**ual **C**ode **R**eader) |
| EMC | Electromagnetic compatibility |
| EN | European standard |
| FE | Functional earth |
| FOV | Reading field of the code reader (**F**ield **o**f **V**iew) |
| GSDML | **G**eneric **S**tation **D**escription **M**arkup **L**anguage |
| IO or I/O | **I**nput/**O**utput |
| IO controller | Control that initiates the IO data communication |
| IO device | Decentral PROFINET fieldbus device |
| IP address | Network address, which is based on the Internet Protocol (IP) |
| LED | LED<br>(**L**ight **E**mitting **D**iode) |
| MAC address | Hardware address of a device in the network<br>(**M**edia **A**ccess **C**ontrol address) |
| PCRE | Regular expressions for reference code comparison<br>(**P**erl **C**ompatible **R**egular **E**xpressions) |
| PELV | Protective extra low voltage with reliable disconnection<br>(**P**rotective **E**xtra **L**ow **V**oltage) |

| | |
|---|---|
| ROI | Region of interest of the code reader (**R**egion **o**f **I**nterest) |
| PLC | Programmable Logic Control<br>(corresponds to Programmable Logic Controller (PLC)) |
| TCP/IP | Internet protocol family (**T**ransmission **C**ontrol **P**rotocol/**I**nternet **P**rotocol) |
| UDP | Network transmission protocol (**U**ser **D**atagram **P**rotocol) |
| UL | **U**nderwriters **L**aboratories |

# 2 Safety

This code reader was developed, manufactured and tested in accordance with the applicable safety standards. It corresponds to the state of the art.

## 2.1 Intended use

The code readers of the DCR 200i series are camera-based code readers for all commonly used bar codes, stacked codes and DataMatrix codes as well as for codes of the GS1 DataBar family.

### Areas of application

The code readers of the DCR 200i series are especially designed for the following areas of application:

- Packaging systems
- Mounting/handling technology
- Analysis technology

**CAUTION**

**Observe intended use!**

The protection of personnel and the device cannot be guaranteed if the device is operated in a manner not complying with its intended use.

- Only operate the device in accordance with its intended use.
- Leuze electronic GmbH + Co. KG is not liable for damages caused by improper use.
- Read these operating instructions before commissioning the device. Knowledge of the operating instructions is an element of proper use.

***NOTICE***

**Integrated illumination!**

The code readers of the DCR 200i series correspond to the following classification with respect to the integrated illumination:

- Illumination **red**: risk group 0 (exempt group) in acc. with EN 62471

***NOTICE***

**Comply with conditions and regulations!**

- Observe the locally applicable legal regulations and the rules of the employer's liability insurance association.

## 2.2 Foreseeable misuse

Any use other than that defined under "Intended use" or which goes beyond that use is considered improper use.

In particular, use of the device is not permitted in the following cases:

- in rooms with explosive atmospheres
- in circuits which are relevant to safety
- In food processing
- for medical purposes

***NOTICE***

**Do not modify or otherwise interfere with the device!**

- Do not carry out modifications or otherwise interfere with the device.
  The device must not be tampered with and must not be changed in any way.
- The device may only be opened for exchanging the housing hood.
- There are no user-serviceable parts inside the device.
- Repairs must only be performed by Leuze electronic GmbH + Co. KG.

## 2.3 Competent persons

Connection, mounting, commissioning and adjustment of the device must only be carried out by competent persons.

Prerequisites for competent persons:

- They have a suitable technical education.
- They are familiar with the rules and regulations for occupational safety and safety at work.
- They are familiar with the operating instructions for the device.
- They have been instructed by the responsible person on the mounting and operation of the device.

**Certified electricians**

Electrical work must be carried out by a certified electrician.

Due to their technical training, knowledge and experience as well as their familiarity with relevant standards and regulations, certified electricians are able to perform work on electrical systems and independently detect possible dangers.

In Germany, certified electricians must fulfill the requirements of accident-prevention regulations BGV A3 (e.g. electrician foreman). In other countries, there are respective regulations that must be observed.

## 2.4 Disclaimer

Leuze electronic GmbH + Co. KG is not liable in the following cases:

- The device is not being used properly.
- Reasonably foreseeable misuse is not taken into account.
- Mounting and electrical connection are not properly performed.
- Changes (e.g., constructional) are made to the device.

# 3 Device description

## 3.1 Device overview

### 3.1.1 About the DCR 200i code reader

The code readers of the DCR 200i series are camera-based code readers for all commonly used bar codes, stacked codes and Data Matrix codes (e.g. Code 128, EAN 8/13, ECC200, QR etc.) as well as for codes of the GS1 DataBar family.

The extensive options for device configuration via control buttons, configuration codes or software enable adaptation to a multitude of reading tasks. The high resolution in combination with a very high depth of field as well as the compact design make the device ideal for use in packaging machines.

Code readers of the DCR 200i series perform numerous tasks in industrial code reading such as:

- Omnidirectional code reading
- Reading of codes while at a standstill or in motion
- Manual reading by holding up codes
- In packaging machines
- In automatic handling and testing machines

The DCR 2xxi code readers are available in several optics models:

- DCR 2xxi with High Density optics (N-optics)
- DCR 2xxi with Medium Density optics (M optics)
- DCR 2xxi with Low Density optics (F optics)

The DCR 2xxi code readers are operated as a “stand-alone” single device with individual IP address in an Ethernet star topology.

Information on technical data and characteristics: see chapter 15 "Technical data".

### 3.1.2 Performance characteristics

- Decoding of 1D-, stacked- and 2D-codes
- Maximum depth of field and reading distance of approx. 40 mm … 360 mm
- High object speed and decoding performance of up to 7 m/s with 10 decodings
- Reference code comparison
- Quality evaluation of 1D bar codes and 2D-codes in accordance with ISO/IEC 15415 and ISO/IEC 15416
- Integrated process interfaces RS 232, RS 422, Ethernet and PROFINET

  The MA 2xxi modular connection units are available for connecting to other fieldbus systems, e.g., PROFIBUS, EtherCAT, etc.
- Four freely programmable switching inputs/outputs for the activation or signaling of states:
  - 1 switching input
  - 1 switching output
  - 2 switching inputs/outputs
- Integrated red LED illumination for illumination of the rectangular read field
- Green feedback LED for direct acknowledgment of whether the read process was successful
- Two control buttons for intuitive operation without PC
- Industrial design: degree of protection IP 65 acc. to EN 60529
- Diverse mounting options with mounting threads on rear and side surfaces
- Variously coded M12 connections for unique assignment of the connections:
  - Voltage supply, RS 232/RS 422, switching inputs/outputs
  - Ethernet/PROFINET connection
- webConfig, a web-based configuration tool for configuration of all device parameters

  No additional configuration software necessary

- Installation wizard for simple configuration in just a few steps
- Integrated teach functions for automatic adjustment of the exposure time, of the code types, and of the number of digits and for teaching a reference code

### 3.1.3 Accessories

Special accessories are available for the code reader (see chapter 16 "Order guide and accessories"):

- Mounting systems for mounting
- Housing hood with integrated protective screen made of glass for increased protection against scratches or welding sparks
- Housing hood with integrated linear polarisation filter – avoids additional interfering reflections
- Diffusor foil that can be affixed to housing hoods, with plastic or glass screen. The diffusor foil reduces interfering reflections
- Ready-made connection and interconnection cables for M12 connectors
- External illumination and mounting bracket for external illumination

  For further information, contact your responsible Leuze electronic subsidiary or Leuze electronic customer service (see chapter 14 "Service and support")
- MA 2xxi modular connection units for connection to fieldbus systems (see chapter 7.6 "Connecting code reader to fieldbus")
- MA 150 modular connection unit for decentralized distribution of the signals (see chapter 7.7 "Connecting code reader to MA 150 connection unit")

## 3.2 Device construction

1 Lens
2 Control panel with indicator LEDs, control buttons, bar graph display
3 LEDs for illumination (red light)
4 M4 mounting thread
5 Device housing
6 Housing hood
7 M12 connection technology
8 Feedback LED (green)

Fig. 3.1: Device construction

## 3.3 Connection technology

The device is connected using variously coded M12 connectors:

- A-coded, 12-pin, M12 connection for operating voltage, switching inputs/outputs, RS 232/RS 422 interface
- D-coded, 4-pin, M12 connection for the Ethernet/PROFINET connection

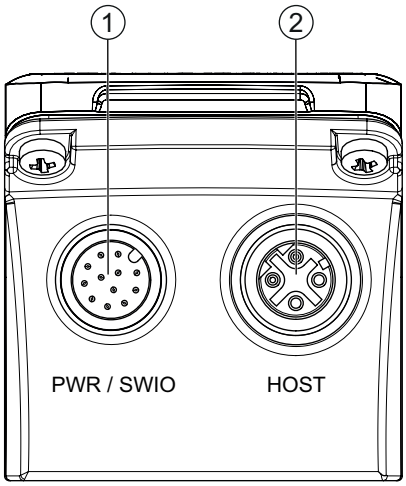


1 PWR / SWIO, M12 plug, 12-pin, A-coded
2 HOST, M12 socket, 4-pin, D-coded

Fig. 3.2: Electrical connections

| | NOTICE |
|---|---|
| | Ready-made cables are available for all connections (see chapter 16.4 "Cables accessories"). |

| | NOTICE |
|---|---|
| | **Shielding connection!**<br>↳ The shielding is connected via the M12 connector housing. |

## 3.4 Indicators and operational controls

The device is equipped with the following indicators and operational controls:

- Feedback LED

  The green feedback LED indicates whether a read process was successful. This function is activated upon shipment of the device from the factory and can be deactivated via the webConfig tool.

  Upon successful decoding, the feedback LED illuminates briefly (GOOD READ, MATCH).
- Three indicator LEDs (PWR, NET, LINK)
- Six-level bar graph display for function selection and display of the read quality (SIGNAL QUALITY)
- Two control buttons

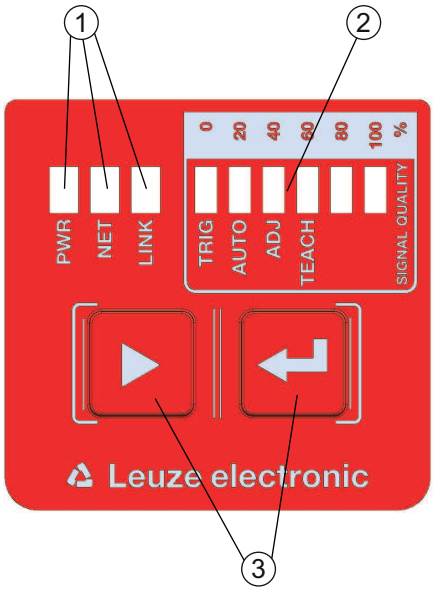


1 LED indicators: PWR, NET, LINK
2 Bar graph display
3 Control buttons

Fig. 3.3: Layout of indicator and control panel

### 3.4.1 LED indicators

#### PWR LED

Tab. 3.1: PWR indicators

| Color | State | Description |
|---|---|---|
| --- | OFF | Device off<br>No operating voltage |
| Green | Flashing | Device ok<br>• Initialization phase<br>• Code reading not possible<br>• Operating voltage applied<br>• Self test running |
| | ON (continuous light) | Device ok<br>• Code reading possible<br>• Self test successfully finished<br>• Device monitoring active |
| Orange | ON (continuous light) | Service mode<br>• Code reading possible<br>• No data on the host interface |
| | Flashing | Wave function (synchronous with NET LED)<br>• Code reading possible |
| Red | Flashing | Device ok, warning set<br>• Code reading possible<br>• Temporary operating fault |
| | ON (continuous light) | Device error/parameter enable<br>No code reading possible |

### NET LED

Tab. 3.2: NET indicators

| Color | State | Description |
|---|---|---|
| --- | OFF | No operating voltage<br>• No communication possible<br>• Ethernet protocols not released<br>• PROFINET-IO communication not initialized or inactive |
| Green | Flashing | Initialization of the device<br>Establishing communication |
| | ON (continuous light) | Operation ok<br>• Network mode ok<br>• Connection and communication to Host established |
| Red | Flashing | Communication error<br>• Temporary connection error<br>• If DHCP active: No IP address could be obtained |
| | ON (continuous light) | Network error<br>• No connection established<br>• No communication possible |
| Orange | Flashing | Topology error detected<br>• No connection established<br>• No communication possible |

***NOTICE***

**NET display only for Ethernet and PROFINET communication!**

The NET indicator refers only to the Ethernet or PROFINET communication, not to the RS 232/ RS 422.

### LINK LED

Tab. 3.3: LINK indicators

| Color | State | Description |
|---|---|---|
| Green | ON (continuous light) | Ethernet connected (LINK) |
| Yellow | Flashing | Data communication (ACT) |

## 3.4.2 Bar graph display

### Function selection

The following functions are selected and displayed via the bar graph display (see chapter 8.5 "Activating device functions"):

- *TRIG*: Trigger function for activating a read process
- *AUTO*: Auto setup function for determining the optimum read setting
- *ADJ*: Adjustment function for aligning the device
- *TEACH*: Teach function for teaching a reference code

The individual functions are selected and activated with the control buttons.

- Select function with the navigation button ▶: The function LED flashes.
- Activate function with the enter button ↵: The function LED illuminates continuously.

| | NOTICE |
|---|---|
| | A preselected function (flashing LED) does not yet have any influence on the functionality. If no button is pressed for a longer period of time, flashing of the LED is ended automatically by the device. |

| | NOTICE |
|---|---|
| | If you activate the *TRIG*, *AUTO*, *ADJ* or *TEACH* function via the control buttons, the device accepts no commands via the process interface. Process mode is thereby interrupted. |

### 3.4.3 Control buttons

The functions of the bar graph display are controlled via the control buttons.

| | NOTICE |
|---|---|
| | In the *Service* operating mode (which is set using the webConfig tool), the code reader cannot be operated using the control buttons. |

- ▶ – Navigation button: Scroll through the functions in the bar graph display from left to right.
- ↵ – Navigation button: Scroll through the functions in the bar graph display.

| | NOTICE |
|---|---|
| | A preselected function (flashing LED) does not yet have any influence on the functionality. If no button is pressed for a longer period of time, flashing of the LED is ended automatically by the device. |

**Example: Activation of the trigger**

↳ Press the navigation button ▶.

⇨ The TRIG LED flashes and the *Trigger* function is preselected.

↳ Press the enter button ↵.

⇨ The TRIG LED illuminates continuously.

⇨ The configured *Trigger* function (e.g., reading gate control) is started.

# 4 Functions

This chapter describes the functions of the code reader:

- Camera operating modes (see chapter 4.1 "Camera operating modes")
- Reference code comparison (see chapter 4.2 "Reference code comparison")
- Code quality (see chapter 4.3 "Code quality")
- webConfig tool (see chapter 4.4 "Leuze webConfig tool")

## 4.1 Camera operating modes

The camera operating mode defines how the code reader starts a read process and decodes the codes if a code is located in the read field.

### 4.1.1 Single trigger mode

In the "Single trigger mode" camera operating mode, the code reader captures *one* image and attempts to decode it. Under uniform conditions, this camera operating mode makes fast decoding possible.

### 4.1.2 Reading gate control

The "Reading gate control" camera operating mode is activated upon shipment from the factory. The reading gate control opens a time window for the read process in the code reader – the reading gate. In this time window, the code reader can capture and decode one or more codes.

### 4.1.3 Burst mode

In the "Burst mode" camera operating mode, the code reader captures *multiple* images in quick succession after activation by a trigger signal.

- Decoding occurs following image capture, thereby allowing the codes to be detected more quickly.
- As soon as the decoding result corresponds to the settings, the decoding stops the capture of the remaining images.

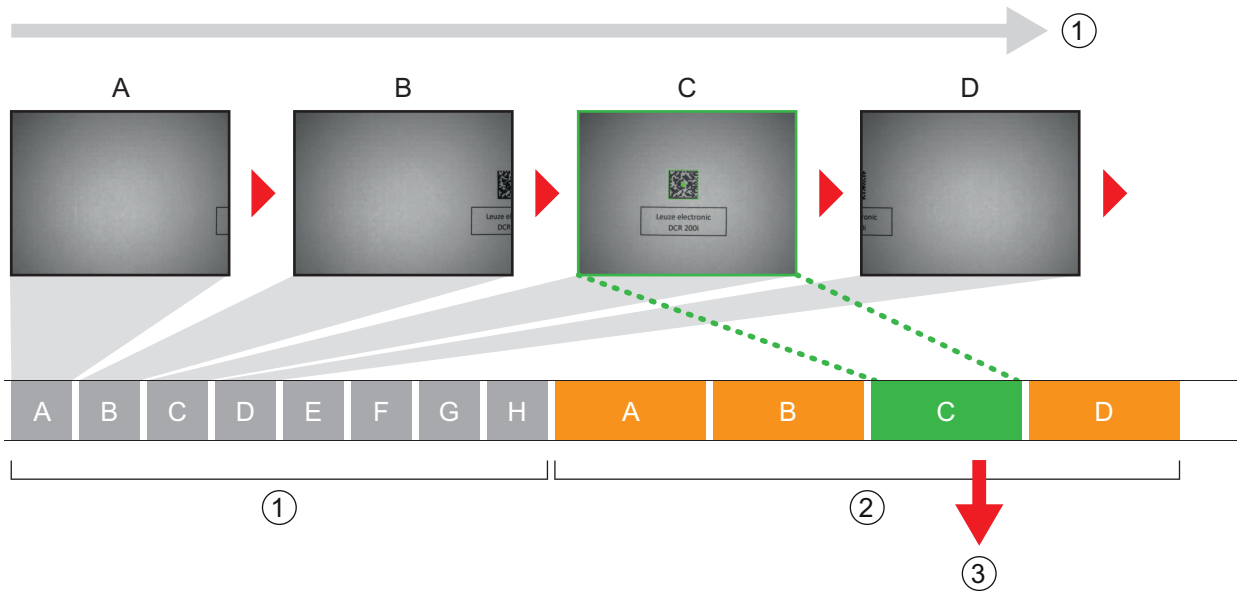


1 Continuous image capture
2 Decoding
3 Output of the read data

Fig. 4.1: "Burst mode" camera operating mode

### 4.1.4 Presentation mode

In the "Presentation mode" camera operating mode, the code reader is in the idle state in a kind of wait mode.

In the event of a change in the image area, e.g., by holding up a code, the code reader captures images with illumination (as previously configured) until a code is read successfully. The code reader then switches back to the wait mode and the illumination switches off after a few seconds.

**Reading the same code multiple times**

To prevent the same code from being read and output repeatedly in the "Presentation mode" camera operating mode, a delay time can be defined that must elapse before a code can be read again.

The delay time is set or deactivated with the webConfig tool (see chapter 9 "Commissioning – Leuze electronic webConfig tool").

**Configuration > Control > Reread delay**

**Sensitivity**

This function can only be activated in the "Presentation mode" camera operating mode. You can set the sensitivity threshold at which a change in the field of view is to be detected: 0 … 100.

- 0 = not sensitive
- 100 = sensitive

### 4.1.5 Continuous mode

In the "Continuous mode" camera operating mode, the code reader operates continuously in process mode. In this mode, image acquisition is started again immediately after an image has been processed. An external trigger signal is not required.

**Image frequency**

You can limit the maximum number of images per second. A reduction in image frequency is recommended for slow applications where the object with the code moves slowly past the code reader. Consider here the decoding time per decoding.

- It is recommended to limit the decoding time.
- It is recommended to deactivate the NO READ output.

## 4.2 Reference code comparison

With the reference code comparison, the code reader compares the actual decoding result with a stored reference code – the exact code content is compared.

Options for teaching-in a new reference code:

- webConfig tool: **Configuration > Decoder > Reference**
- Online command via the host interface
- Signal via a digital switching input
- TEACH function on the control panel of the code reader

In the webConfig tool, the exact code content can be entered for comparison.

**Regular expressions**

As an alternative to the exact code comparison, regular expressions can be used for a partial comparison.

Regular expressions can only be entered via the webConfig tool (see chapter 9 "Commissioning – Leuze electronic webConfig tool").

Detailed information on regular expressions can be found on the Internet under Perl Compatible Regular Expressions (PCRE) **http://www.pcre.org/**.

- Example 1

  The code reader is to perform a partial comparison of two characters "42". Any number of characters and content may precede the string "42".

  - Comparison string entered in the webConfig tool: 42
  - Positive reference code comparison (match): 123**42**5
  - Negative reference code comparison (mismatch): 12345

- Example 2

  The code reader is to perform a partial comparison of two characters "42". Beginning with the string "42", any number of characters and content may follow.
  - Comparison string entered in the webConfig tool: ^42
  - Positive reference code comparison (match): **42**345
  - Negative reference code comparison (mismatch): 12345

| | NOTICE |
|---|---|
| | **Using space characters with regular expressions!**<br>↳ When entering regular expressions, note the use of space characters. |

## 4.3 Code quality

### Overview

To check the code quality, you can activate the *Code quality* function. This function determines the code quality for bar codes and 2D-codes in compliance with ISO/IEC 15416 and ISO/IEC 15415.

| | NOTICE |
|---|---|
| | Activating the *Code quality* function increases the decoding time. |

The code quality is given as follows: A … F

- A = High quality
- F = Low quality

The following options are available:

- Determination of individual features for bar codes and 2D-codes
- Setting of a minimum quality (= NOMINAL MINIMUM)
- Output of each feature via the interface and as a programmable switching output

**ISO/IEC 15416 mode: Individual features for bar codes**

- Overall quality
- Symbol contrast (SC)
- Modulation (MOD)
- Decodability
- Minimal edge contrast ($EC_{min}$)
- Minimal reflectance ($R_{min}$)
- Defects
- Decodes

**ISO/IEC 15415 mode: Individual features for 2D-codes**

- Overall quality
- Symbol contrast (SC)
- Modulation (MOD)
- Decodability
- Fixed pattern damage (FPD)
- Axial non-uniformity (AN)
- Grid non-uniformity (GN)
- Unused error correction (UEC)
- Reflectance margin

- Print growth
- Defects (only PDF417)
- Start/stop pattern (only PDF417)
- Codeword yield (only PDF417)

**Overall quality**

The "Overall quality" feature corresponds to the lowest ascertained individual quality. If multiple codes are decoded, the minimum quality is output via the switching output for the first found code only.

## 4.4 Leuze webConfig tool

The webConfig configuration tool offers a graphical user interface for the configuration of the code reader via a PC (see chapter 9 "Commissioning – Leuze electronic webConfig tool").

The wizard of the webConfig tool can be used to easily configure the code reader in just a few steps.

# 5 Applications

## 5.1 Reading of 1D-codes

Fig. 5.1: Reading of 1D-codes

## 5.2 Reading of 2D-codes

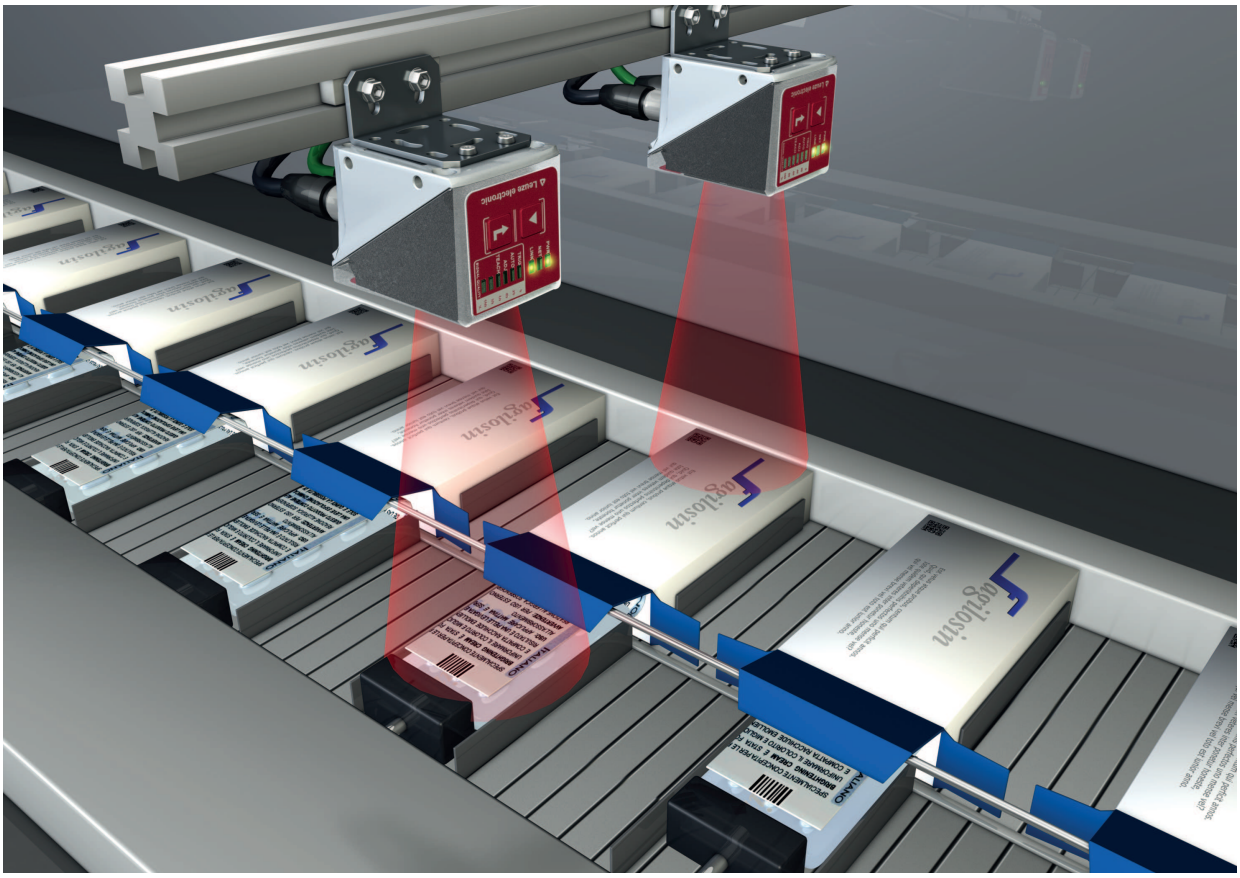

Fig. 5.2: Reading of 2D-codes in packaging systems

## 5.3 Code reading with polarization filter

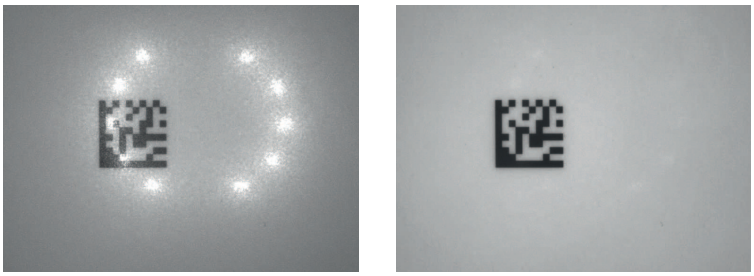

① ②

1 Code reading without polarization filter
2 Code reading with polarization filter

Fig. 5.3: Using the polarization filter

By using the linear polarization filter integrated in the housing hood, you can avoid interfering reflections.

| | ***NOTICE*** |
|---|---|
| | When the polarization filter is used, the exposure settings change. The exposure time is increased considerably. |

## 5.4 Code reading with diffusor foil

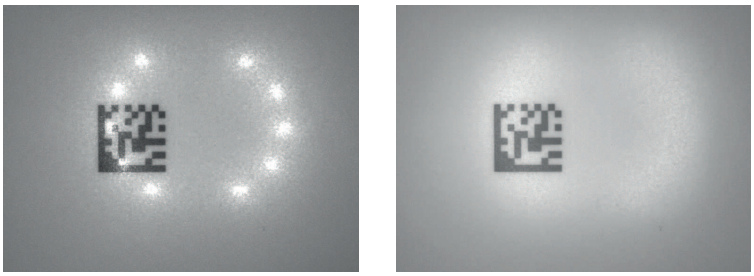

① ②

1 Code reading without diffusor foil
2 Code reading with diffusor foil

Fig. 5.4: Using the diffusor foil

The diffusor foil reduces interfering reflections by increasing the scatter of the integrated LED illumination of the code reader.

| | NOTICE |
|---|---|
| | When the diffusor foil is used, the exposure settings change. |

# 6 Mounting

The code reader can be mounted in the following ways:

- Mounting using four M4 mounting threads on the rear of the device
- Mounting using two M4 mounting threads on each of the side surfaces of the device
- Mounting on a 12 mm rod using the BTU 320M-D12 mounting system
- Mounting on the BT 320M mounting bracket

| | NOTICE |
|---|---|
| | ↳ Mount the device on a metal mounting bracket. |

## 6.1 Determining the mounting position of the code reader

### 6.1.1 Selecting a mounting location

| | NOTICE |
|---|---|
| | The size of the code module influences the maximum reading distance and the width of the reading field. Therefore, when selecting a mounting location and/or the suitable code label, take into account the different reading characteristics of the code reader with various code modules. |

| | NOTICE |
|---|---|
| | **Observe when choosing the mounting location!**<br>↳ Make certain that the required environmental conditions (humidity, temperature) are maintained.<br>↳ Avoid possible soiling of the reading window due to liquids, abrasion by boxes, or packaging material residues.<br>↳ Ensure the lowest possible chance of damage to the code reader through mechanical collision or jammed parts.<br>↳ Avoid possible ambient light influence (no direct sunlight). |

Take the following factors into account when selecting the correct mounting location:

- Size, orientation, and position tolerance of the bar codes or Data Matrix codes on the objects to be scanned.
- The reading distance resulting from the code size and code type (see chapter 6.1.3 "Determining the reading distance").
- Time of data output.

  Position the device in such a way that, taking into consideration the time required for data processing and the conveyor belt speed, there is sufficient time to e.g. initiate sorting operations on the basis of the read data.
- The permissible line lengths between code reader and host system depending on which interface is used.
- Visibility of the control panel and access to the control buttons.
- No direct sunlight and/or no strong ambient light on the code that is to be read.

Observe the following criteria for the best read results:

- The reading distance is located in the middle part of the read field (see chapter 6.1.3 "Determining the reading distance").
- There is no direct sunlight and protect against ambient light effects.
- The code labels are of good print quality and have good contrast ratios.

- Do not use glossy labels.
- The bar code or DataMatrix code is moved past the reading window with a tilt angle or angle of inclination of 10° … 20° (see chapter 6.1.2 "Avoiding total reflection").

### 6.1.2 Avoiding total reflection

If the illumination light of the code reader is directly incident on the surface of the code at an angle of 90°, total reflection occurs. The illumination light directly reflected by the code label may overload the code reader and thereby result in non-reading of the code.

↳ Mount the code reader with a tilt angle or angle of inclination of ±10° … 20° from vertical.

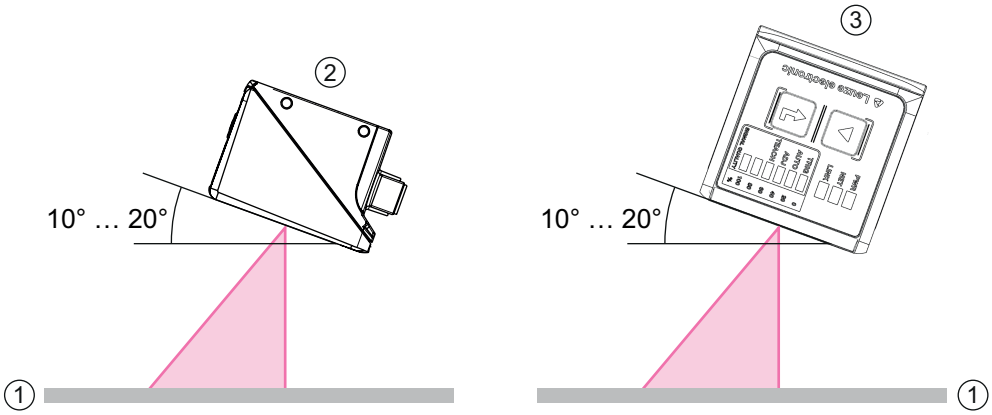


Recommended tilt angle or angle of inclination: 10° … 20°

1 Code label

2 Mounting with tilt angle

3 Mounting with angle of inclination

Fig. 6.1: Mounting with tilt angle or angle of inclination

### 6.1.3 Determining the reading distance

In general, the read field of the code reader becomes larger with increasing reading distance. This also results in a decrease in the resolution, however.

The following figures show typical reading distances for the individual optics models of the code reader.

| | NOTICE |
|---|---|
| | Code reading while in motion is dependent on the code type, code size, cell or modulus size of the code and the position of the code in the read field of the code reader. |

For the relationship between camera distance and reading field size, see the section "Relationship between camera distance and reading field size".

**Reading distances for code reader with N1-optics**

| | NOTICE |
|---|---|
| | Please note that the actual reading distances are also influenced by factors such as labeling material, printing quality, reading angle, printing contrast etc., and may thus deviate from the reading distances specified here. |

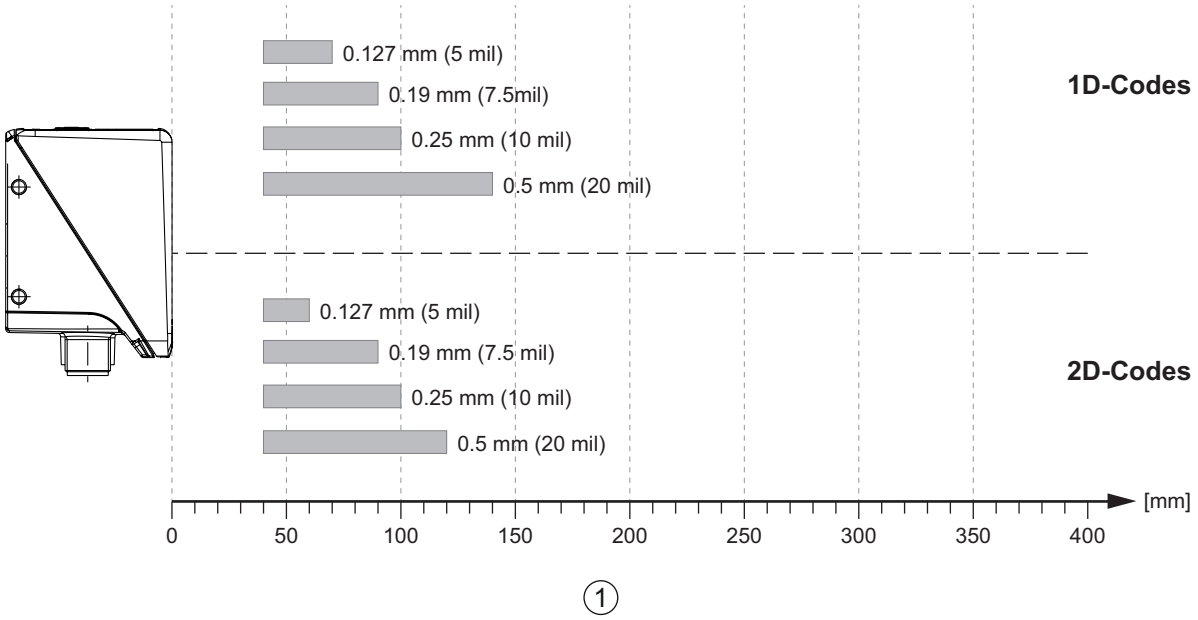


1 Reading distance [mm]

Fig. 6.2: Typical reading distances for 1D- and 2D-codes with various modulus sizes of the codes

### Reading distances for code reader with M1-optics

| NOTICE | |
|---|---|
| | Please note that the actual reading distances are also influenced by factors such as labeling material, printing quality, reading angle, printing contrast etc., and may thus deviate from the reading distances specified here. |

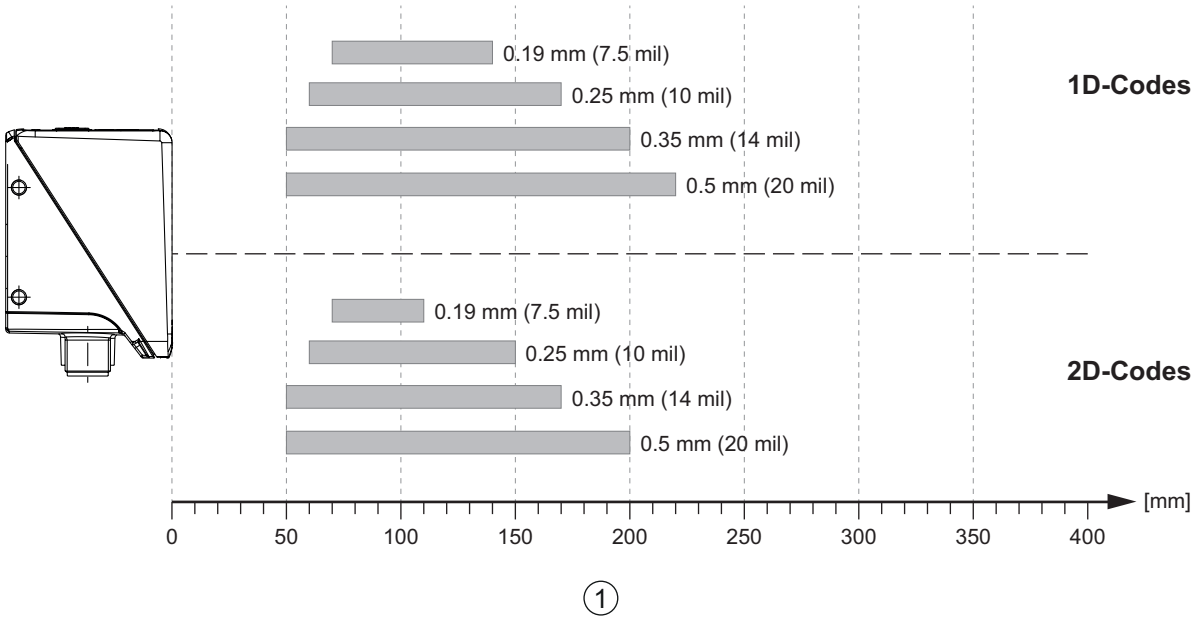


1 Reading distance [mm]

Fig. 6.3: Typical reading distances for 1D- and 2D-codes with various modulus sizes of the codes

### Reading distances for code reader with F-optics

**NOTICE**

Please note that the actual reading distances are also influenced by factors such as labeling material, printing quality, reading angle, printing contrast etc., and may thus deviate from the reading distances specified here.

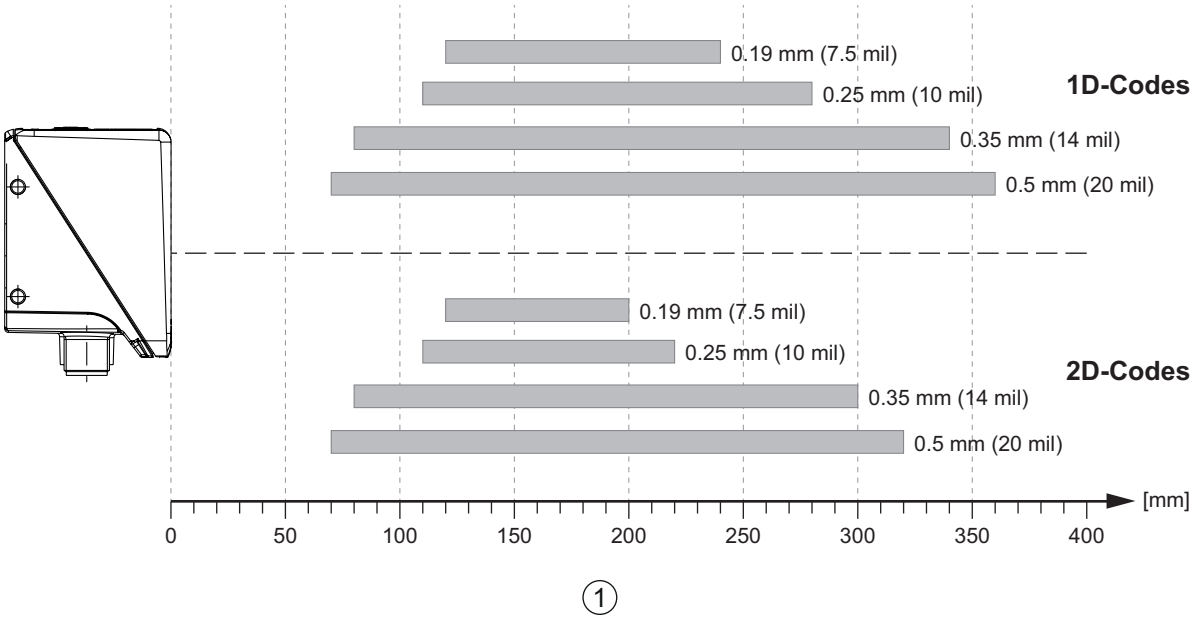


1 Reading distance [mm]

Fig. 6.4: Typical reading distances for 1D- and 2D-codes with various modulus sizes of the codes

### Relationship between camera distance and reading field size

The following images show the relationship between the camera distance and the resulting read field for the individual optics models of the code reader. The camera distance is the path from the front edge of the code reader to the code.

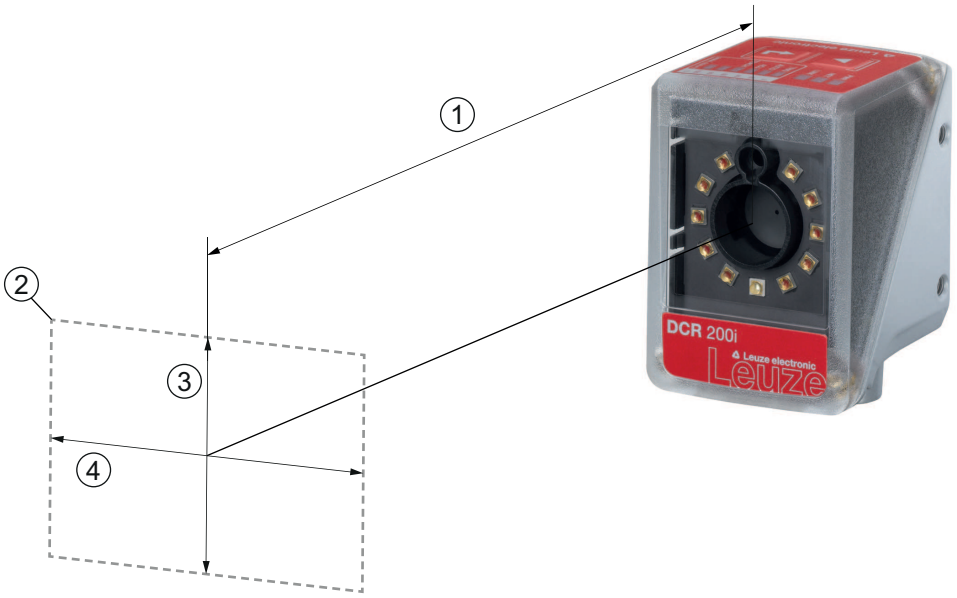


1 Camera distance
2 Reading field
3 Height of the reading field
4 Width of the reading field

Fig. 6.5: Camera distance and read field

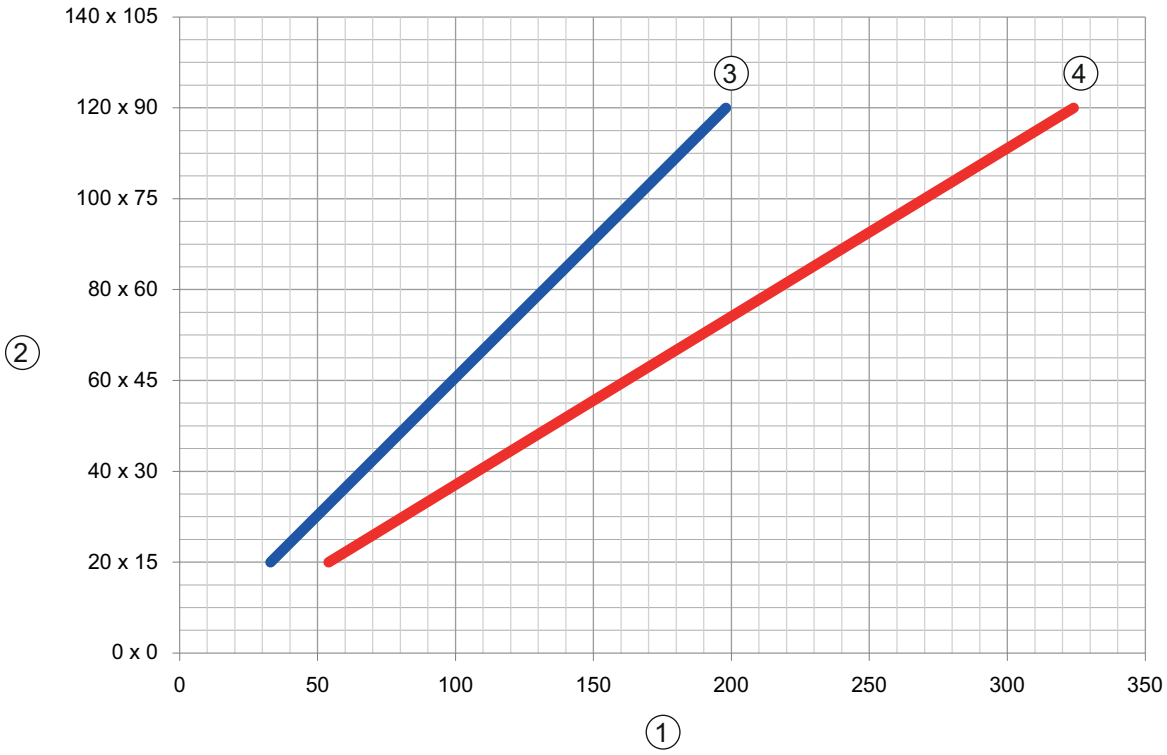


1 Camera distance [mm]
2 Reading field: width x height [mm]
3 N1-optics, M1-optics
4 F-optics

Fig. 6.6: Relationship between camera distance and reading field size

## 6.2 Mounting the code reader

| NOTICE | |
|---|---|
| | Information on mounting the code reader can also be found in document "Quick Start Guide DCR 200i". |

### 6.2.1 Mounting with M4 fastening screws

- Mount the device on the system with M4 fastening screws (not included in delivery contents).
  - Max. tightening torque of the fastening screws: 1.4 Nm
  - Location and thread depth of the mounting thread: see chapter 15.3 "Dimensioned drawings"

### 6.2.2 Mounting with the BTU 320M-D12 mounting system

Mounting with a BTU 320M-D12 mounting system is intended for 12-mm rod mounting. For ordering information, see chapter 16.5 "Other accessories".

- Mount the mounting system on the rod with the clamp profile (system-side).
- Mount the device to the mounting system with M4 fastening screws.
  - Max. tightening torque of the fastening screws: 1.4 Nm
  - Location and thread depth of the mounting thread: see chapter 15.3 "Dimensioned drawings"

### 6.2.3 Mounting with the BT 320M mounting bracket

Mounting with a BT 320M mounting bracket is intended for wall mounting. For ordering information, see chapter 16.5 "Other accessories".

- Mount the mounting bracket on the system side with M4 fastening screws (included in delivery contents).
- Mount the device to the mounting bracket with M4 fastening screws.
  - Max. tightening torque of the fastening screws: 1.4 Nm
  - Location and thread depth of the mounting thread: see chapter 15.3 "Dimensioned drawings"

### 6.2.4 Mounting with the BTU 320M-D12-RL70 mounting bracket

Mounting using a BTU 320M-D12-RL70 mounting bracket is intended for 12 mm rod mounting in combination with the RL-70/40r-003-M12 ring light. For ordering information, see chapter 16.5 "Other accessories".

- Mount the ring light to the mounting bracket with M4 fastening screws.
- Mount the device to the mounting bracket with M4 fastening screws.
  - Max. tightening torque of the fastening screws: 1.4 Nm
  - Location and thread depth of the mounting thread: see chapter 15.3 "Dimensioned drawings"
- Mount the mounting bracket on the rod with the clamp profile (system-side).

## 6.3 Replace housing hood

In individual cases, you can exchange the housing hood of the code reader, e.g., if the protective screen is scratched or if changed operating conditions necessitate a housing hood with polarization filter. For ordering information, see chapter 16.3 "Optical accessories".

| | *NOTICE* |
|---|---|
| ! | **Only replace the housing hood while the device is in a de-energized state!**<br>Only replace the housing hood if no voltage is being applied to the device.<br>- Disconnect the device from the voltage supply before replacing the device hood. |

| | *NOTICE* |
|---|---|
| ! | **Check the seal before mounting!**<br>- Check the seal on the base of the code reader housing for cleanliness before mounting the new housing hood. |

| | *NOTICE* |
|---|---|
| ! | **Clean the new housing hood before mounting!**<br>- Clean the new housing hood with a soft cloth before mounting. |

- Loosen the four fastening screws of the housing hood.
- First tip the housing hood downward and away from the housing base.
- Then lift the housing hood up and off of the housing base.
- Then mount the new housing hood in the reverse order. The tightening torque of the fastening screws is 0.25 Nm.

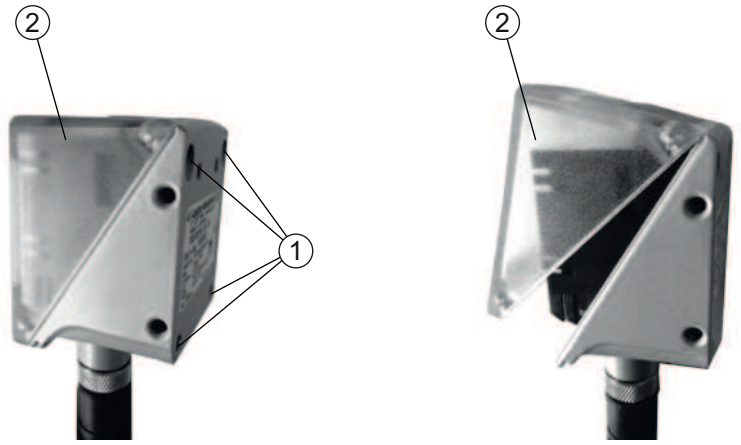


1 Fastening screws
2 Housing hood

Fig. 6.7: Replace housing hood

## 6.4 Attaching the diffusor foil

To reduce interfering reflections, you can attach a diffusor foil to the screen of the housing hood.

| | NOTICE |
|---|---|
| ! | **Do not use diffusor foil in combination with polarization filter!**<br>The diffusor foil is not suitable for use in combination with the polarization filter. |

| | NOTICE |
|---|---|
| ! | **Only attach diffusor foil to dust- and grease-free surface!**<br>↳ Before attaching the foil, make certain that the surface is free of dust and grease. |

↳ Make certain that the diffusor foil is correctly oriented.
Small recess at top, large recess at bottom.

Fig. 6.8: Orientation of the diffusor foil

↳ Attach the diffusor foil to the housing screen from bottom to top.

Fig. 6.9: Attaching the diffusor foil

| | NOTICE |
|---|---|
| ! | **Avoid air bubbles when attaching the diffusor foil!**<br>↳ When attaching the diffusor foil, take care to prevent bubbles from forming under the film. |

# 7 Electrical connection

**CAUTION**

**Safety notices!**

- Before connecting the device, please ensure that the operating voltage matches the value printed on the nameplate.
- Only allow competent persons to perform the electrical connection.
- Ensure that the functional earth (FE) is connected correctly.
  Fault-free operation is only guaranteed if the functional earth is connected properly.
- If faults cannot be rectified, take the device out of operation. Protect the device from accidentally being started.

***NOTICE***

**Shielding connection!**

The shielding is connected via the M12 connector housing.

***NOTICE***

**UL applications!**

For UL applications, use is only permitted in Class 2 circuits in accordance with the NEC (National Electric Code).

***NOTICE***

**Protective Extra Low Voltage (PELV)!**

The device is designed in accordance with protection class III for supply with PELV (Protective Extra-Low Voltage).

***NOTICE***

**Degree of protection IP65!**

Degree of protection IP65 is achieved only if the connectors and caps are screwed into place.

## 7.1 Overview

The code reader is provided with the following connections:

- PWR / SWIO: A-coded, 12-pin, M12 connection for operating voltage, switching inputs/outputs, RS 232/RS 422 interface
- HOST: D-coded, 4-pin, M12 connection for the Ethernet/PROFINET connection

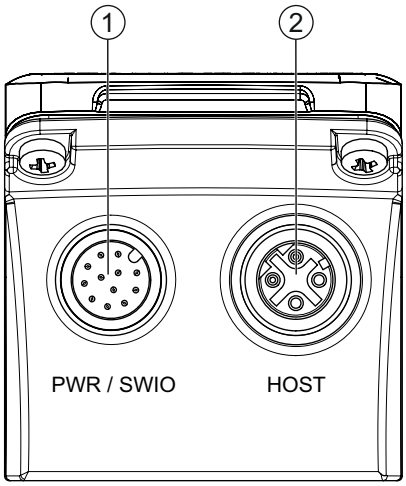


1 PWR / SWIO, M12 plug, 12-pin, A-coded
2 HOST, M12 socket, 4-pin, D-coded

Fig. 7.1: Electrical connections

| NOTICE | |
|---|---|
| | Ready-made cables are available for all connections (see chapter 16.4 "Cables accessories"). |

**Voltage supply, RS 232/RS 422 and switching inputs/outputs**

The voltage supply (18 V … 30 V DC) is connected at the PWR / SWIO M12 plug.

The RS 232/RS 422 interface on the PWR / SWIO M12 plug is directly connected to the host.

To connect to other fieldbus systems, e.g., PROFIBUS, PROFINET, EtherCAT, etc., Leuze electronic offers various connection units (see chapter 7.6 "Connecting code reader to fieldbus").

Four freely programmable switching inputs/outputs for individual adaptation to the respective application are also available on the PWR / SWIO M12 plug.

**Standalone operation in Ethernet network**

The code reader is operated as a "stand-alone" single device in an Ethernet star topology with individual IP address. The host interface of the superior system is connected to the HOST M12 socket.

## 7.2 PWR / SWIO – voltage supply / RS 232/RS 422 / switching inputs/outputs

12-pin M12 plug (A-coded)

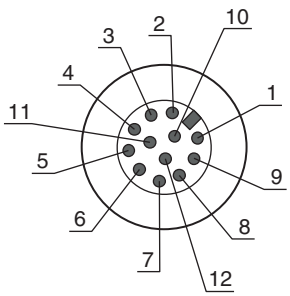


Fig. 7.2: PWR / SWIO connection

Tab. 7.1: PWR / SWIO pin assignment

| Pin | Designation | Core color | Assignment |
|---|---|---|---|
| 1 | VIN | Brown | +18 … +30 V DC operating voltage |
| 2 | GNDIN | Blue | Negative operating voltage (0 V DC) |
| 3 | SWI1 | White | Digital switching input 1 (default: "Trigger") |
| 4 | SWO2 | Green | Digital switching output 2 (default: "Good Read") |
| 5 | FE | Pink | Functional earth |
| 6 | GNDOUT | Yellow | Ground reference RS 232/RS 422 |
| 7 | RX- | Black | RS 422: RX- signal |
| 8 | TX- | Gray | RS 422: TX- signal |
| 9 | RXD/RX+ | Red | RS 232: RXD signal<br>RS 422: RX+ signal |
| 10 | TXD/TX+ | Violet | RS 232: TXD signal<br>RS 422: TX+ signal |
| 11 | SWIO3 | Gray/pink | Digital switching input/output 3 (configurable)<br>(default: switching output "No read") |
| 12 | SWIO4 | Red/blue | Digital switching input/output 4 (configurable)<br>(default: switching output "Device ready") |
| Thread (M12 plug) | FE (functional earth) | | Connection cable shield.<br>The shield of the connection cable is on the thread of the M12 plug. |

***NOTICE***

The core colors only apply if Leuze electronic's original connection cables are used (see chapter 16.4 "Cables accessories").

***NOTICE***

**UL applications!**

For UL applications, use is only permitted in Class 2 circuits in accordance with the NEC (National Electric Code).

**Switching input/output**

The code reader features four freely programmable switching inputs/outputs: SWI1, SWO2, SWIO3 and SWIO4.

***NOTICE***

The function as switching input or switching output is set via the webConfig configuration tool (**CONFIGURATION > DEVICE > Switching inputs/outputs**, see chapter 9 "Commissioning – Leuze electronic webConfig tool").

The four switching inputs/outputs are configured by default as follows:

- SWI1
  Trigger switching input (default)
- SWO2
  GOOD READ switching output (default)
- SWIO3
  As switching output: NO READ (default)
- SWIO4
  As switching output: device ready (default)

**Function as switching input**

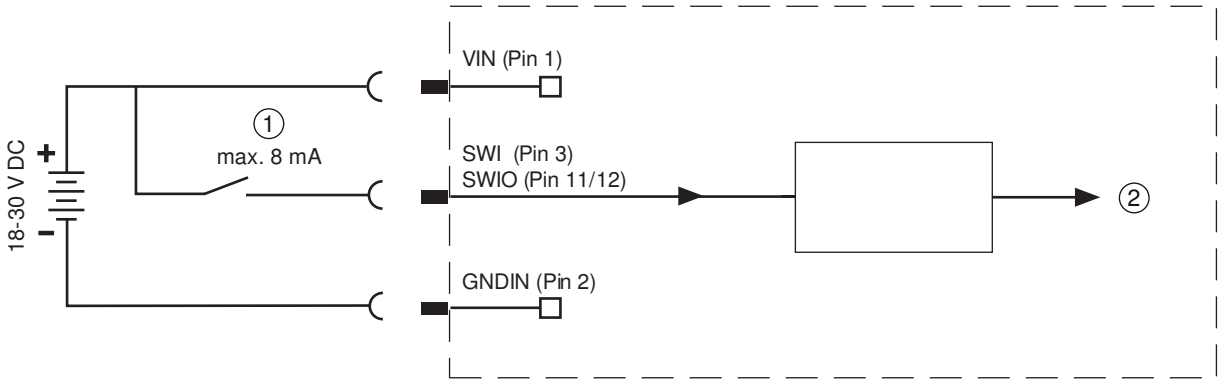


1 Switching input
2 Switching input to controller

Fig. 7.3: Switching input SWIO3 and SWIO4 connection

**NOTICE**

**Maximum input current!**

- The input current of the respective switching input is maximum 8 mA.

**Function as switching output**

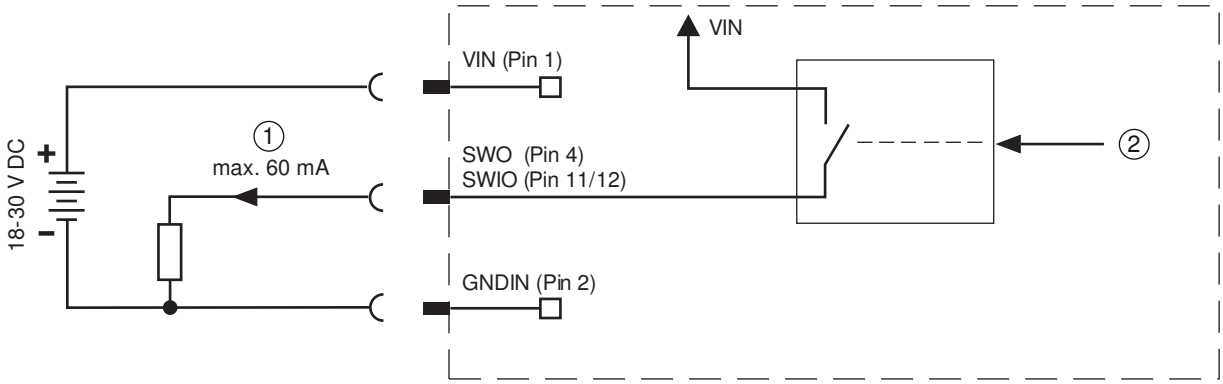


1 Switching output
2 Switching output from controller

Fig. 7.4: Switching output SWIO3 and SWIO4 connection

**NOTICE**

**Maximum loading of the switching outputs!**

- Do not load the respective switching output of the code reader with more than 60 mA at +18 V … +30 V DC in normal operation.
- Each configured switching output is short-circuit proof.

| NOTICE | |
|---|---|
| ! | **SWIO3 and SWIO4 as switching output!**<br>↳ Do not operate pins 2 and 4 as switching output if sensors which function as switching input are also connected to these pins.<br>⇨ If, for example, the inverted sensor output is connected to pin 2, and pin 2 of the code reader is, at the same time, configured as a switching output (and not as a switching input), the switching output malfunctions. |

**RS 232/RS 422 interface**

The RS 232/RS 422 interface is used primarily for outputting the read and decoded code contents of the activated code types.

## 7.3 HOST - Host input / Ethernet / PROFINET

4-pin, M12 socket (D-coded) for connecting to HOST.

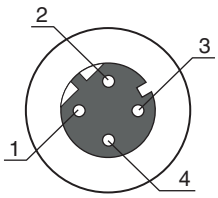


Fig. 7.5: HOST connection

Tab. 7.2: HOST pin assignment

| Pin/terminal | Designation | Assignment |
|---|---|---|
| 1 | TD+ | Transmit Data + |
| 2 | RD+ | Receive Data + |
| 3 | TD- | Transmit Data - |
| 4 | RD- | Receive Data - |
| Thread (M12 socket) | FE (functional earth) | Connection cable shield.<br>The shield of the connection cable is on the thread of the M12 socket. |

| NOTICE | |
|---|---|
| ! | **Use ready-made cables!**<br>↳ If possible, use the ready-made cables from Leuze electronic (see chapter 16.4 "Cables accessories"). |

## 7.4 Ethernet star topology

The code reader is operated as a "stand-alone" single device in an Ethernet star topology with individual IP address.

- The code reader is designed as an Ethernet device with a standard baud rate of 10/100 Mbit.
- A fixed MAC address is assigned to each device by the manufacturer; this address cannot be changed.
- The device automatically supports the transmission rates of 10 Mbit/s (10BASE T) and 100 Mbit/s (10BASE TX), as well as auto-negotiation and auto-crossover.
- The device supports the following protocols and services:
  - TCP / IP (client/server)
  - UDP
  - ARP
  - PING

- For communication with the superior host system, the corresponding TCP/IP protocol (client/server mode) or UDP must be selected.

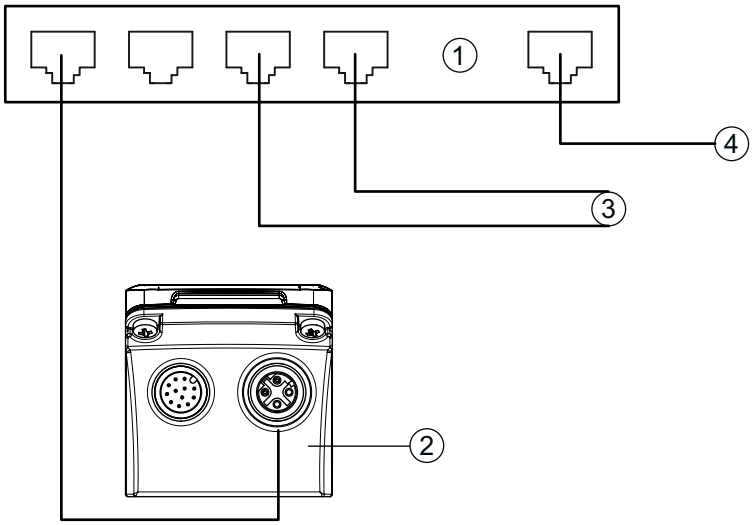


1 Ethernet switch
2 Code reader of the DCR 200i series
3 Other network participants
4 Host interface - PC/control

Fig. 7.6: Ethernet star topology

### Ethernet cable assignment

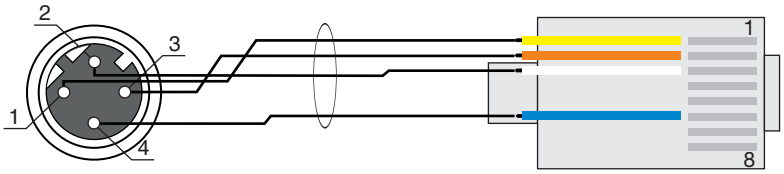


Fig. 7.7: HOST to RJ-45 cable assignments

Designed as shielded cable, max. 100 m.

| Pin (M12) | Designation | Pin/core color (RJ45) |
|---|---|---|
| 1 | TD+ | 1/yellow |
| 2 | RD+ | 3/white |
| 3 | TD- | 2/orange |
| 4 | RD- | 6/blue |

***NOTICE***

**Self-configured cables with Ethernet interface!**

- Ensure adequate shielding.
- The entire interconnection cable must be shielded and earthed.
- The RD+/RD- and TD+/TD- wires must be stranded in pairs.
- Use at least a CAT 5 cable for the connection.

## 7.5 Cable lengths and shielding

Observe the maximum cable lengths and the shielding types:

| Connection | Interface | Max. cable length | Shielding |
|---|---|---|---|
| DCR 200i host | RS 232<br>RS 422 | 10 m<br>1200 m<br>(dependent on baud rate) | Shielding absolutely necessary<br>RS 422 conductors, stranded in pairs |
| Network from the first DCR 200i to the last network participant | Ethernet | Max. segment length: 100 m for 100BASE-TX twisted pair (min. CAT 5) | Shielding absolutely necessary |
| Switching input | | 10 m | Not necessary |
| Switching output | | 10 m | Not necessary |
| DCR 200i power supply unit | | 30 m | Not necessary |

## 7.6 Connecting code reader to fieldbus

The code reader can be connected to the following fieldbuses via the MA 2xxi modular connection units:

- CANopen: MA 235i
- EtherCAT: MA 238i
- EtherNet/IP: MA 258i
- DeviceNET: MA 255i
- PROFIBUS: MA 204i
- PROFINET: MA 248i

| | ***NOTICE*** |
|---|---|
| | Ready-made cables are available for connecting the code reader to a modular connection unit (see chapter 16.4 "Cables accessories"). |

## 7.7 Connecting code reader to MA 150 connection unit

The signals from the code reader are distributed in the machine decentrally via the MA 150 modular connection unit. The following components can be connected to the MA 150 connection unit:

- Code reader of the DCR 200i series
- Photoelectric sensor/diffuse sensor to activate the code reader
- Voltage supply
- External illumination
- Serial communication RS 232/RS 422

### Circuit diagram example for electrical installation with MA 150 connection unit

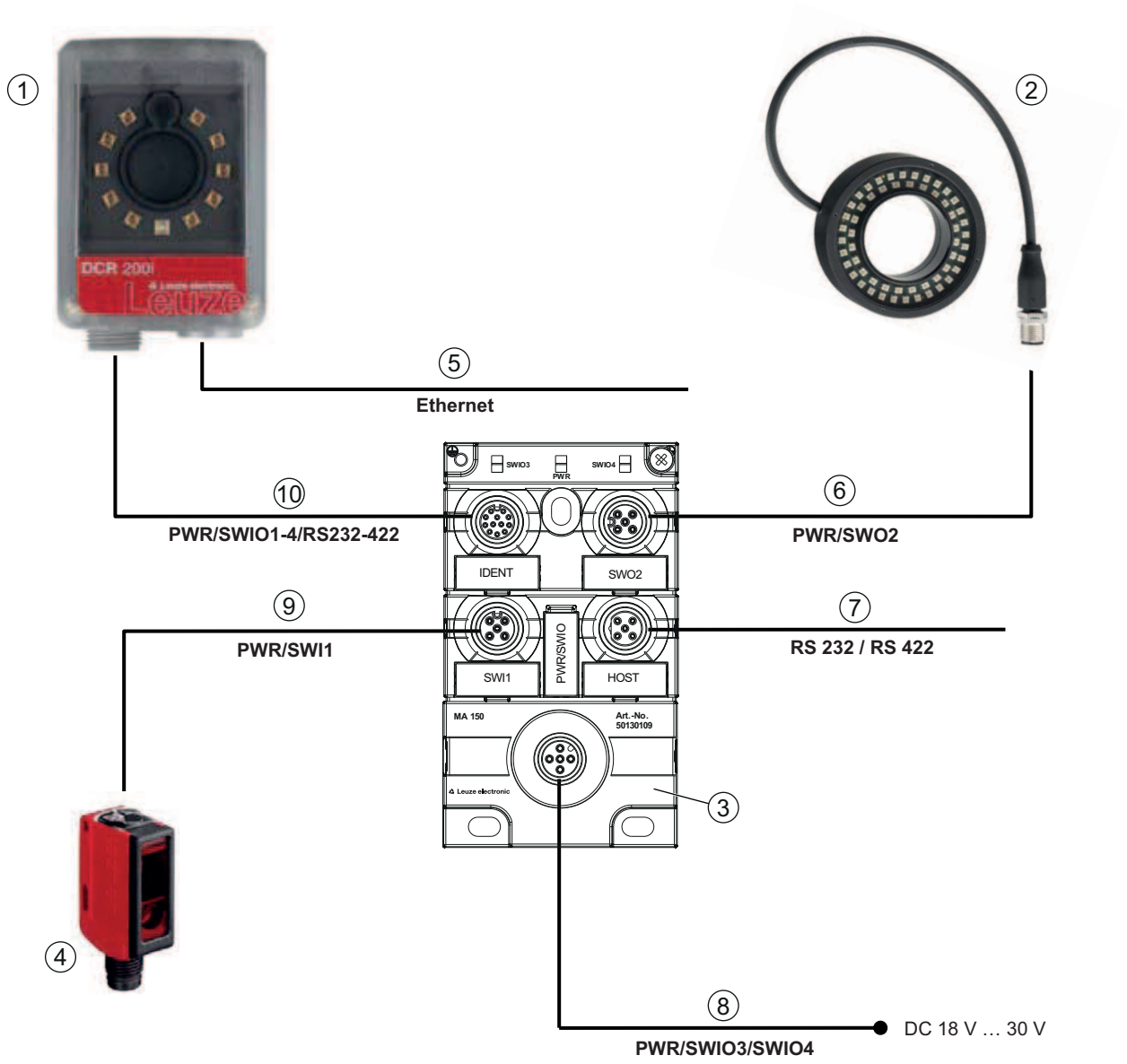


| | |
|---|---|
| 1 | DCR 200i code reader |
| 2 | External illumination<br>e.g., 50132511 |
| 3 | MA 150 modular connection unit |
| 4 | Sensor (photoelectric sensor/diffuse sensor) |
| 5 | Cable, M12 connector/RJ45, 4-pin, 2 m<br>e.g., 50109880 |
| 6 | Cable, M12 connector/socket, 3-pin, 2 m<br>e.g., 50130734 |
| 7 | Cable, M12 connector/open cable end, 5-pin, 2 m<br>e.g., 50108595 |
| 8 | Cable, M12 socket/open cable end, 5-pin, 2 m<br>e.g., 50104555 |
| 9 | Cable, M12 socket/connector, 4-pin, 2 m<br>e.g., 50110126 |
| 10 | Cable, M12 socket/connector, 12-pin, 2 m<br>e.g., 5030284 |

Fig. 7.8: Circuit diagram example with MA 150 connection unit

# 8 Starting up the device – Basic configuration

## 8.1 Measures to be performed prior to the initial commissioning

**NOTICE**

- Observe the notices for device arrangement (see chapter 6.1 "Determining the mounting position of the code reader").
- If possible, always trigger the code reader with the aid of commands or an external signal transmitter (e.g. photoelectric sensor/diffuse sensor).
  - ⇨ Only then can you be certain whether a code has been read (code contents are transmitted) or not (the "NO READ" character is transmitted at the end of the reading gate).
- Before commissioning, familiarize yourself with the operation and configuration of the device.
- Before connecting the operating voltage, recheck all connections and ensure that they have been properly made.

**NOTICE**

No additional configuration software is necessary for commissioning.

## 8.2 Starting the device

- Connect the 18 V … 30 V DC operating voltage.
- After applying the operating voltage, the device operates with the factory settings:
- Activation of the reading gate via SWI1. The integrated illumination becomes visible.
- If a code is detected, it is output via the interfaces.
  - Protocol of the RS 232 interface:

    **<STX><Code data><CR><LF>**

    (9600 baud, 8 data bits, no parity, 1 stop bit)
- With the factory settings, the device can decode the following code types:
  - 2/5 Interleaved; number of digits: 10
  - Code 128; number of digits: 4 … 63
  - Code 39; number of digits: 4 … 30
  - EAN 8/13; number of digits: 8 and 13
  - UPC; number of digits: 8 ... 12
  - Codabar; number of digits: 4 … 63
  - Code 93; number of digits: 4 … 63
  - GS1 DataBar OMNIDIRECTIONAL; number of digits: 14
  - GS1 DataBar LIMITED; number of digits: 14
  - GS1 DataBar EXPANDED; number of digits: 14 … 21
  - GS1 DataBar TRUNCATED; number of digits: 14
  - DataMatrix code ECC200; number of digits: 10x10 … 144x144, or 8x18 … 16x48
  - QR code; number of digits: 11x11 … 161x161
  - Aztec code; number of digits: 11x11 … 151x151

**NOTICE**

Deviations from these settings must be set via the webConfig tool (see chapter 9 "Commissioning – Leuze electronic webConfig tool").

↳ Using the online commands, important device functions can be checked, e.g. reading activation (see chapter 11.1 "Online commands").

| | NOTICE |
|---|---|
| | For information on how to proceed in the event of problems during commissioning of the devices see chapter 13 "Diagnostics and troubleshooting".<br>If a problem occurs that cannot be rectified even after checking all electrical connections and settings on the devices and on the host, contact your responsible Leuze electronic subsidiary or Leuze electronic customer service (see chapter 14 "Service and support"). |

## 8.3 Setting the communication parameters

With the communication parameters, you determine how data is exchanged between device and host system, monitor PCs etc.

| | NOTICE |
|---|---|
| | For devices with integrated PROFINET interface: see chapter 10 "PROFINET" |

### 8.3.1 Manually setting the IP address

Set the IP manually if your system does not include a DHCP server or if the IP addresses of the devices are to be set permanently.

Factory settings for the network address of the code readers DCR 248i:

- IP address: 192.168.060.101
- Subnet mask: 255.255.255.0

**Setting the IP address via PC/laptop**

Set the network address on the PC (example for Windows7).

↳ Log in as administrator.

↳ Select *Start* > *System control* > *Network and Internet* > *Network and Sharing Center*.

⇨ Select *LAN connection* and double-click to open the *Properties* dialog.

↳ Select *Internet Protocol Version 4 (TCP/IPv4)* and click on the [Properties] button.

↳ Set the *IP address* of the PC.

⇨ The IP address of the PC must not be identical to the IP address of the code reader.

⇨ Example: IP address of the code reader: 192.168.060.101
IP address of the PC: 192.168.060.110

↳ Set the subnet mask of the PC to the same value as on the code reader.

⇨ Example: 255.255.255.0

↳ Confirm all of the settings dialogs with [OK] or [Close].

↳ Connect the Ethernet interface of the device directly to the LAN port of the PC.

↳ Start the webConfig tool using your PC's Internet browser with IP address **192.168.060.101**.

| | NOTICE |
|---|---|
| | With PROFINET devices, you can change the station name:<br>**Configuration > Control > Host > PROFINET**<br>IP address, subnet mask and gateway settings can be viewed but not changed. |

| | NOTICE |
|---|---|
| | **The device cannot be accessed if the IP address is incorrect!**<br>↳ Make certain that the correct IP address is entered. The device can otherwise no longer be accessed. |

**Setting the IP address with Device-Finder**

- Download the program *Device-Finder* from the Internet to the PC.
  - ⇨ Call up the Leuze home page: **www.leuze.com**.
  - ⇨ Enter the type designation or part number of the device as the search term.
  - ⇨ The program *Device-Finder* can be found on the product page for the device under the *Downloads* tab.
- Connect the Ethernet interface of the device directly to the LAN port of the PC.
- Start the program *Device-Finder*.
  - ⇨ The program displays all code readers DCR 2xxi that are available in the network.
- Select the DCR 2xxi code reader from the list.
  - ⇨ The IP address of the code reader can now be changed to the desired IP address.

**Setting the IP address with the DCR Configurator**

With the "DCR Configurator" smartphone app, you can set the IP address of the code reader without a PC.

- Download the "DCR Configurator" smartphone app from the Internet.
  - ⇨ Call up the Leuze home page: **www.leuze.com**.
  - ⇨ Enter the type designation or part number of the device as the search term.
  - ⇨ The "DCR Configurator" smartphone app can be found on the product page for the device on the *Downloads* tab.
- Open the "DCR Configurator" smartphone app.
- Select the **Assign IP address configuration** menu item and enter the desired IP address.
  - ⇨ The "DCR Configurator" generates a configuration code for changing the IP address to the desired value. The configuration code is displayed on the smartphone.
- Connect the code reader to the voltage supply and select the *AUTO* function on the control panel.
- Hold the configuration code generated by the "DCR Configurator" at the correct distance in front of the optics of the code reader.
- ⇨ The code reader adjusts the illumination and reads the configuration code.
- ⇨ The code reader changes the device configuration and saves the new configuration.

### 8.3.2 Automatically setting the IP address

Set the IP address automatically if a DHCP server assigns the IP addresses in the system.

- Select the option to obtain the IP address automatically in the webConfig tool:
  **Configuration > Control > Ethernet DCR > DHCP**
- Use the configuration code to obtain the IP address automatically (see chapter 18.3 "Configuration via configuration codes").

### 8.3.3 Address Link Label

The "Address Link Label" is an additional stick-on label that is affixed to the device.

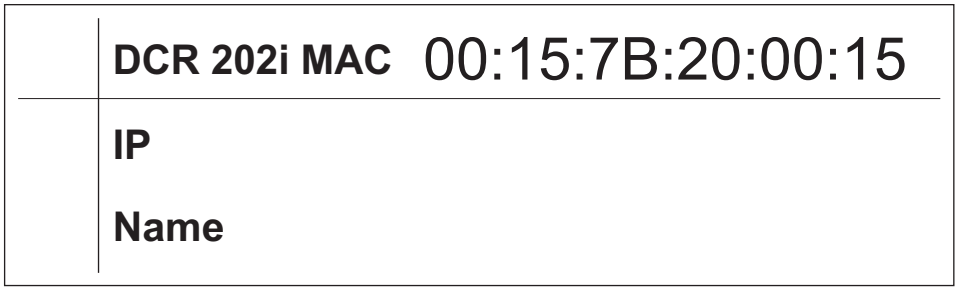


Fig. 8.1: Example of an "Address Link Label"; the device type varies depending on the series

- The "Address Link Label" contains the MAC address (Media Access Control address) of the device and makes it possible to enter the IP address and the device name manually.

  The area of the "Address Link Label" on which the MAC address is printed can be separated from the remainder of the stick-on label if necessary using the perforation.
- The "Address Link Label" can be removed from the device and affixed in the installation and layout diagrams to designate the device.
- Once it is affixed in the documents, the "Address Link Label" establishes a unique reference between the mounting location, the MAC address or the device, and the associated control program.

  There is no need for time-consuming searching, reading, and manually writing down of the MAC addresses of every device that is installed in the system.

| | ***NOTICE*** |
|---|---|
| | Each device with Ethernet interface is uniquely identified via the MAC address assigned during production. The MAC address is also listed on the name plate of the device.<br>If multiple devices are commissioned in a system, the MAC address of each installed device must be correctly assigned, e.g., during programming of the control. |

### 8.3.4 Ethernet host communication

You can configure the connections to an external host system via the Ethernet host communication.

You can use both the UDP protocol as well as the TCP/IP protocol – in either client or in server mode. Both protocols can be activated simultaneously and used in parallel.

- The connection-free UDP protocol is used primarily to transfer process data to the host (monitor operation).
- The connection-oriented TCP/IP protocol can also be used to transfer commands from the host to the device. With this connection, the data is backed up by the TCP/IP protocol itself.
- If you would like to use the TCP/IP protocol, you must also define whether the device is to operate as a TCP client or as a TCP server.

**UDP**

The device requires from the user the IP address and the port number of the communication partner. In the same way, the host system (PC/control) also requires the set IP address of the device and the selected port number. By assigning these parameters, a socket is formed via which the data can be sent and received.

↳ Activate the UDP protocol.

↳ Set the following values:

  ⇨ IP address of the communication partner

  ⇨ Port number of the communication partner

The corresponding adjustment options can be found in the webConfig tool:
**Configuration > Control > Host > Ethernet > UDP**

**TCP/IP**

↳ Activate the TCP/IP protocol.

↳ Set the TCP/IP mode of the device.

  ⇨ In TCP client mode, the device actively establishes the connection to the superior host system, e.g., PC/control as server. The device requires from the user the IP address of the server (host system) and the port number on which the server (host system) accepts a connection. In this case, the device determines when and with whom a connection is established.

  ⇨ In TCP server mode, the superior host system (PC/control) actively establishes the connection and the connected device waits for the connection to be set up.
  The TCP/IP stack must be informed by the user as to the local port of the device (port number) on which connection requests from a client application (host system) are to be received.
  If there is a connection request and a connection is established by the superior host system (PC/control as client), the device – in server mode – accepts the connection. Data can then be sent and received.

- With a device as TCP client, set the following values:
  - IP address of the TCP server, normally the IP address of the control or the host computer
  - Port number of the TCP server
  - Timeout for the wait time for an answer from the server
  - Repetition time for renewed communication attempt following a timeout
- With a device as TCP server, set the following values:
  - Port number for the communication of the device with the TCP clients

The corresponding adjustment options can be found in the webConfig tool:
**Configuration > Control > Host > Ethernet > TCP/IP**

### 8.3.5 RS 232/RS 422 communication

The code reader sends an **S** to the interface as a start-up message and to announce that the device is ready.

The device operates as follows with the factory settings:

- Activation of the reading gate via SWI1. The integrated illumination becomes visible.
- If a code is detected, it is output via the RS 232 interface according to the following protocol.

  **<STX><Code data><CR><LF>**

  (9600 baud, 8 data bits, no parity, 1 stop bit)

### 8.3.6 FTP client

To transfer images and log files, you can configure process data output via an FTP server.

- You can set the IP address and the port number of the FTP server with which communication is to occur.
- Assign user names and password settings or define the direction of communication using the *Passive mode* option.
  - When the *Passive mode* option is activated, the FTP client sets up an outgoing connection to the server.
- Activate the FTP client.
- Select which images (OK/NOK) are transferred. You can assign each one a name.

The corresponding adjustment options can be found in the webConfig tool:
**Configuration > Control > Host > FTP client**

| | ***NOTICE*** |
|---|---|
| | You can set the time stamp via **Maintenance > System clock**.<br>The system clock is reset if the operating voltage is interrupted. |

## 8.4 Configuration via configuration codes

You can make configuration changes with the help of configuration codes (see chapter 18.3 "Configuration via configuration codes").

## 8.5 Activating device functions

You can activate the following device functions via the control buttons on the control panel:

- *TRIG*
- *AUTO*
- *ADJ*
- *TEACH*

- Connect the code reader to the voltage supply.
- Select the desired function via the control buttons on the control panel (see chapter 3.4.2 "Bar graph display").

### TRIG

Trigger function that activates a read process with the configuration stored in the device, e.g., reading gate control.

### AUTO

By activating the *AUTO* function, the following sequence is started:

1. Optimum image setting: The device determines the optimum illumination setting for the given scenario.
2. Determine code types and number of digits: If codes are found, they are decoded.
3. Decoder table: The contents of the decoder table stored in the device are deleted. The new codes (code type and number of digits) are stored in the decoder table.

| | ***NOTICE*** |
|---|---|
| ! | **Only activate the *AUTO* function while at a standstill!**<br>↳ Only activate the *AUTO* function if the code is not moving relative to the device. |

| | ***NOTICE*** |
|---|---|
| ! | ***AUTO* function not for Pharmacode!**<br>↳ The *AUTO* function cannot be used for Pharmacode codes. |

### ADJ

Adjustment function for aligning the device.

The reading quality is visually displayed as a percentage in the bar graph display. The bar graph display depicts the average value over the last ten measurements.

| | ***NOTICE*** |
|---|---|
| ! | **Deactivate the *ADJ* function!**<br>↳ You must deactivate the *ADJ* function with the enter button ↵. |

### TEACH

With activation of the teach function, a present code is taught-in as a reference code.

During the teach event, the reading gate is opened and a code located in the read field is decoded. The decoded code is stored as a new reference code in the device.

| | ***NOTICE*** |
|---|---|
| ! | **Only one code in the read field during the teach function!**<br>↳ Upon activation of the teach function, only one code may be located in the read field of the device. |

| | ***NOTICE*** |
|---|---|
| ! | ***TEACH* function not for Pharmacode!**<br>↳ The teach function cannot be used for Pharmacode codes. |

## 8.6 Performing further settings

### 8.6.1 Decoding and processing the read data

The device offers the following possibilities:

- Setting the number of code labels to be decoded for each reading gate (0 … 99). This is done via the *Max. no. of labels* parameter.
- Setting the *Search mode* in which the system is to search for the codes (see chapter 8.6.5 "Optimizing reading performance").
  - *Fast*
  - *Optimized*
  - *Robust*
- Further parameters can be set for many code types, e.g.
  - Code type (symbology)
  - Number of digits

    Either a number of digits, e.g., 10, 12, 24, or a number of digits range, e.g., 8 … 22
  - Check digit method used for decoding as well as the type of check digit transmission for the output of the read result.

    Standard: corresponds to the standard for the selected code type/symbology

    Not standard

↳ Define at least one code type with the desired settings.

⇨ webConfig tool: **Configuration > Decoder**

⇨ Control buttons: *AUTO* function

### 8.6.2 Control of the decoding

In general, decoding is controlled via the configurable switching inputs/outputs. The corresponding connection to the PWR / SWIO interface must be configured as a switching input for this purpose (see chapter 7.2 "PWR / SWIO – voltage supply / RS 232/RS 422 / switching inputs/outputs").

Controlling decoding via a switching input:

- Start/stop decoding
- Start decoding and then stop decoding after a configurable time period
- Read in a reference code
- Start automatic code type configuration (*AUTO* function)
- Start alignment mode

↳ Connect the required control devices, e.g., photoelectric sensor, proximity switch, etc., to the device (see chapter 7 "Electrical connection").

↳ Configure the connected switching inputs according to your requirements.

⇨ First set the I/O mode to input.

⇨ Then configure the switching behavior.

⇨ webConfig tool: **Configuration > Control > Digital I/Os**

| | ***NOTICE*** |
|---|---|
| | Alternatively, depending on the camera operating mode, you can activate decoding using the **+** online command and deactivate it using the **–** online command (see chapter 11.1 "Online commands"). |

### 8.6.3 Activating camera operating mode

The camera operating mode defines how the code reader starts a read process and decodes the codes if a code is located in the read field (see chapter 4.1 "Camera operating modes").

The following options are available for activating the camera operating mode:

- webConfig tool (see chapter 9 "Commissioning – Leuze electronic webConfig tool")

  **CONFIGURATION > CONTROL > Camera operating mode**
- Online command via the host interface (see chapter 11.1 "Online commands")
- Trigger signal via a digital trigger input

### 8.6.4 Control of the switching outputs

By using the switching inputs/outputs of the device, external event-controlled functions can be implemented without assistance from the superior process control. Switching inputs/outputs SWO2, SWIO3 and SWIO4 on the PWR / SWIO connection must be configured as switching output for this purpose (see chapter 7.2 "PWR / SWIO – voltage supply / RS 232/RS 422 / switching inputs/outputs").

A switching output can, for example, be activated according to the following criteria:

- At the start/end of the reading gate
- Upon actuation by an external flash
- Depending on the read result:
  - reference code comparison positive/negative
  - read result valid/invalid
- Depending on the state of the device:
  - Device ready/not ready
  - Data transmission active/not active
  - Active/standby
  - Error/no error

↳ Connect the required switching outputs (see chapter 7 "Electrical connection").

↳ Configure the connected switching outputs according to your requirements.

⇨ First set the I/O mode to output

⇨ Then configure the switching behavior.

⇨ webConfig tool: **Configuration > Control > Digital I/Os**

### 8.6.5 Optimizing reading performance

Optimize the reading performance of the code reader using the following settings in the webConfig tool:

- *Decoding table*

  Limiting of the code types being searched for and the number of digits

  The adjustment options can be found in the webConfig tool: **Configuration > Decoder > Code types**
- *Exposure time*

  A short exposure time enables high object speeds. Because the image brightness is thereby reduced, it may be necessary to adjust the signal gain. Image noise increases as a result, however.

  The adjustment options can be found in the webConfig tool: **Configuration > Image acquisition**
- *Working range*

  Define a region of interest (ROI) to restrict coding to a single part of the image. If no region of interest is defined, the complete image is defined as the region of interest.

  The adjustment options can be found in the webConfig tool: **Configuration > Decoder > Region of interest**
- *Max. decoding time*

  Define the maximum decoding time to limit the execution time of the code search algorithm.

  The adjustment options can be found in the webConfig tool: **Configuration > Decoder > Properties**

- *Camera operating mode*

  Select the *Single trigger mode* camera operating mode for fast complete decoding.

  The adjustment options can be found in the webConfig tool: **Configuration > Control > Camera operating mode**
- *Max. no. of codes*

  If the maximum number of codes to be expected in an image (ROI) is small and known, the code search is accelerated.

  Define the maximum number of codes that can be decoded in a test program. If the defined number of codes has been decoded, the code search algorithm is interrupted.

  The adjustment options can be found in the webConfig tool: **Configuration > Decoder > Extended**
- *Image transfer*

  Deactivation of image transfer in process mode increases the decoding rate.

  Adjustment options can be found in the webConfig tool: **Configuration > Device > Image transfer**
- *Search mode*

  Select the *Optimized* search mode for fast decoding. This search mode can only be used for 2D-codes.

  The adjustment options can be found in the webConfig tool: **Configuration > Decoder > Extended**

  You must then teach the found codes using the [Optimize code] button.
- *Color mode*

  If it is known beforehand whether the codes are printed black on a white background or white on a black background, you can select the color mode accordingly. Set the *Automatic* color mode if codes in both print variants are present.

  The adjustment options can be found in the webConfig tool: **Configuration > Decoder > Extended**

### 8.6.6 Transfer configuration data

**Transferring configuration data with the webConfig tool**

With the webConfig tool, you can store complete device configurations on data carriers and transfer them from these to the device: **Maintenance > Backup/Restore**

This storage of configuration data is especially useful if you want to store basic configurations which will require only minor changes.

# 9 Commissioning – Leuze electronic webConfig tool

The code readers of the DCR 200i series can be operated and configured via the Ethernet service interface with the integrated Leuze electronic webConfig tool.

With the webConfig tool, an operating-system independent, web-technology based, graphical user interface is available for configuring code readers.

Through the use of HTTP as communication protocol and the client-side restriction to standard technologies (HTML, JavaScript and AJAX), which are supported by all of today's popular, modern browsers, it is possible to operate the webConfig tool on any Internet-enabled PC.

| | NOTICE |
|---|---|
| | The webConfig tool is offered in the following languages:<br>German, English, French, Italian, Spanish, Chinese, Korean |

## 9.1 System requirements

To use the webConfig tool, you need a PC or laptop with the following specifications:

Tab. 9.1: System requirements for the webConfig tool

| | |
|---|---|
| Monitor | Min. resolution: 1280 x 800 pixels or higher |
| Internet browser | Internet Explorer version 9.0 or higher<br>Firefox version 30 or higher<br>Chrome version 40 or higher |

| | NOTICE |
|---|---|
| | ↳ Regularly update the operating system and the Internet browser.<br>↳ Install the current Windows Service Packs. |

## 9.2 Start webConfig tool

✓ Prerequisite: IP address and subnet mask for the LAN connection with the device are set correctly.

↳ Connect the operating voltage to the device.

↳ Connect the HOST interface of the device to the PC. The connection to the HOST interface of the device is made via the LAN port of the PC.

↳ Start the webConfig tool via your PC's Internet browser with IP address **192.168.60.101** or with the IP address set by you.

⇨ **192.168.60.101** is the standard Leuze electronic IP address for communication with code readers of the DCR 200i series.

The PC displays the webConfig start page with the current process information in the *Process* operating mode:

- Current image of the code reader
- Current decoding result
- Brief history of the last decoding operations
- States of the switching inputs/outputs
- Statistics counter

| | NOTICE |
|---|---|
| | The process information may be displayed with a time delay depending on the current processing speed. |

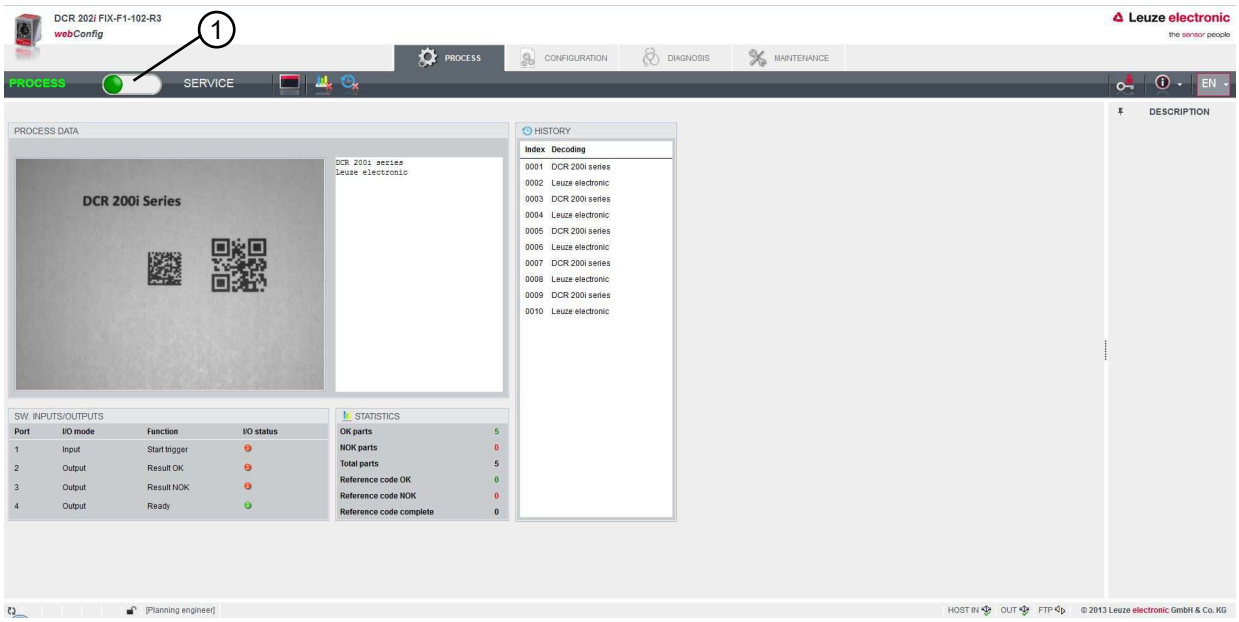


1 Changing the operating mode (*Process* - *Service*)

Fig. 9.1: The start page of the webConfig tool

The user interface of the webConfig tool is largely self-explanatory.

| | ***NOTICE*** |
|---|---|
| | The webConfig tool is completely contained in the firmware of the device. The pages and functions of the webConfig tool may appear and be displayed differently depending on the firmware version. |

**Clear browser history**

The cache of the Internet browser is to be cleared if different device types or devices with different firmware were connected to the webConfig tool.

↳ Delete cookies and temporary Internet and website data from browser history before starting the webConfig tool.

⇨ Example for Internet Explorer 10:
**Settings > Security > Browser History >** [Delete]

**Note limit of Firefox sessions for version 17.0 and higher**

If the limited number of Firefox sessions is exceeded, it may no longer be possible to address the device via the webConfig tool.

↳ Do **not** use the refresh functions of the Internet browser:
[Shift] [F5] or [Shift] + mouse click

## 9.3 Short description of the webConfig tool

The menus and dialog boxes of the webConfig tool are intuitive to operate and provide texts and tool tips.

The start page of the webConfig tool displays the current process information.

### 9.3.1 Change operating mode

For configurations with the webConfig tool, you can switch between the following operating modes:

- *Process*

  The device is connected to the control or to the PC.
  - The process communication to the control is activated.
  - The switching inputs/outputs are activated.
  - The image currently recorded by the code reader is displayed if the function was not deactivated in the webConfig tool.
  - The configuration cannot be changed.
- *Service*
  - Process communication to the control or to the PC has been interrupted.
  - The switching inputs/outputs are deactivated.
  - The configuration can be changed.

| NOTICE | |
|---|---|
| ! | **Configuration changes only in the *Service* operating mode!**<br>↳ Changes made using the *CONFIGURATION* function can only be performed in the *Service* operating mode. |

Located in the upper left of all pages of the webConfig tool is a software switch for changing the operating mode (*Process* - *Service*).

After changing to the *Service* operating mode, the **CONFIGURATION** menu is displayed.

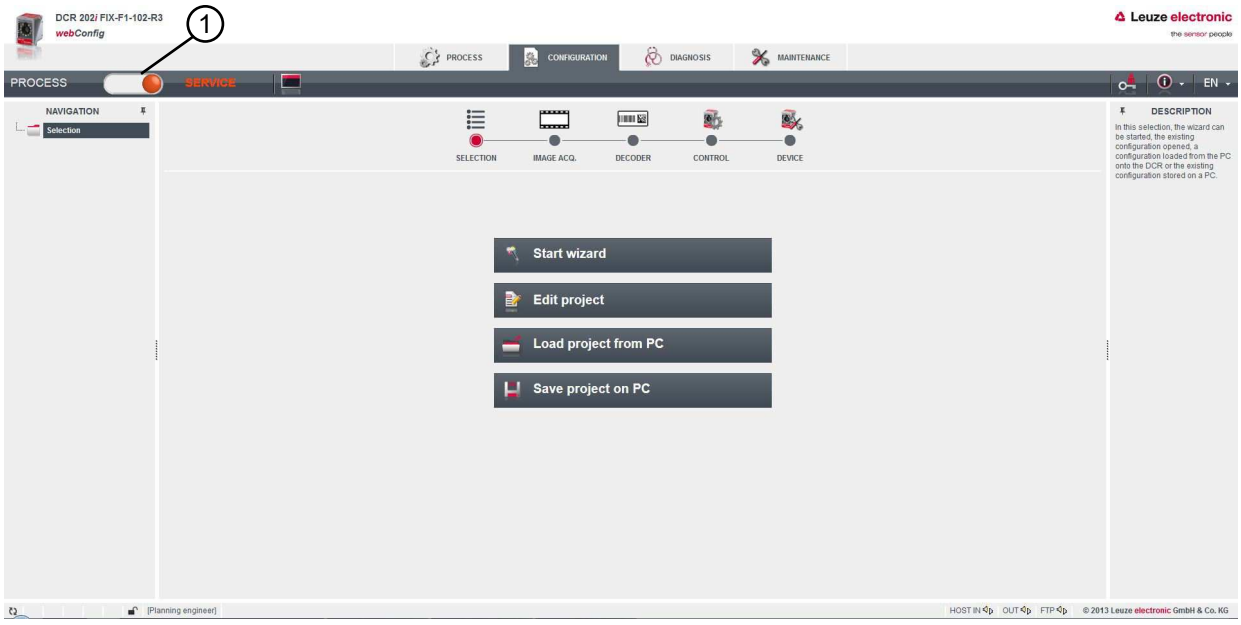


1 Changing the operating mode (*Process* - *Service*)

Fig. 9.2: **CONFIGURATION** menu of the webConfig tool

### 9.3.2 Menu options of the webConfig tool

The webConfig tool offers the following menu functions:

- **PROCESS**
  - Information on the current read result
  - Current camera image
  - Status of the switching inputs/outputs
  - Reading statistics

- **CONFIGURATION**
  - Configuring decoding
  - Configuring data formatting and data output
  - Configuring the switching inputs/outputs
  - Configuring communication parameters and interfaces
  - General device settings, e.g. device names
- **DIAGNOSTICS**
  - Event logging of warnings and errors
- **MAINTENANCE**
  - Assigning user roles (user management)
  - Backup/restore the configuration file
  - Update firmware
  - Setting system time (system clock)
  - Managing user guidance

### 9.3.3 CONFIGURATION menu

***NOTICE***

**Configuration changes only in the *Service* operating mode!**

↳ Changes made using the **CONFIGURATION** menu can only be performed in the *Service* operating mode.

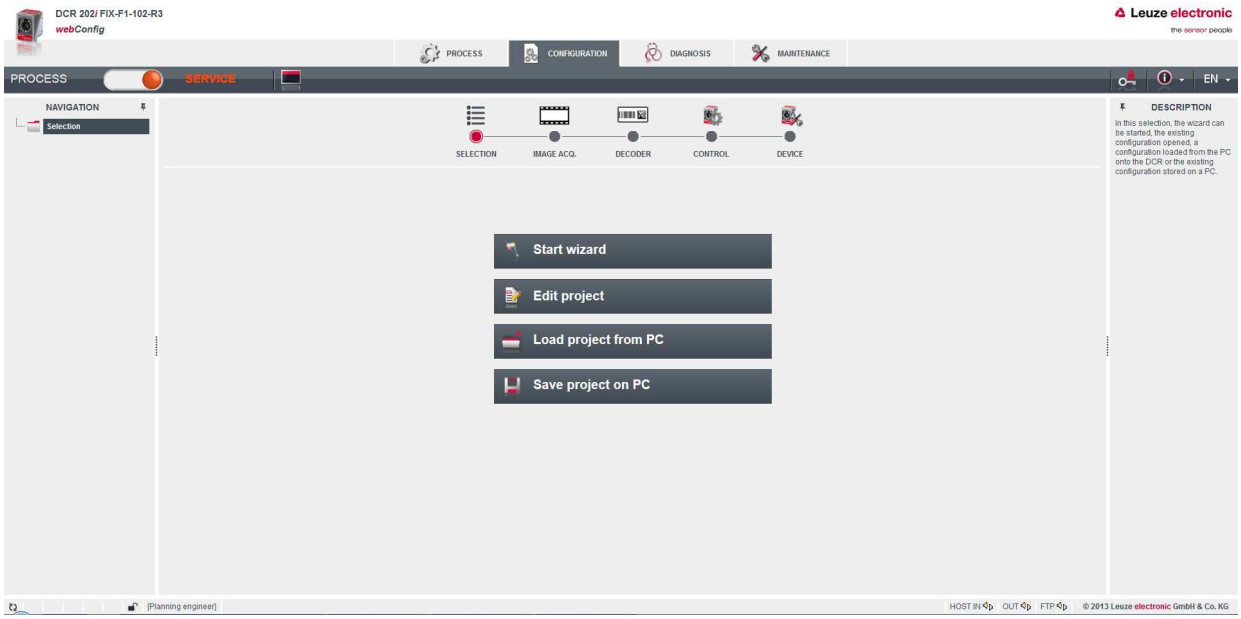


Fig. 9.3: **CONFIGURATION** menu

↳ Select the application that you would like to configure.

- [Start wizard]: Quick configuration in just a few steps
- [Edit project]: Configuration via the full view of the webConfig tool
- [Load project from PC]: Configuration via an existing configuration project
- [Save project on PC]: Save configuration project

### 9.3.4 Configuring applications with the wizard

With the configuration wizard, you can set up your application in just a few steps.

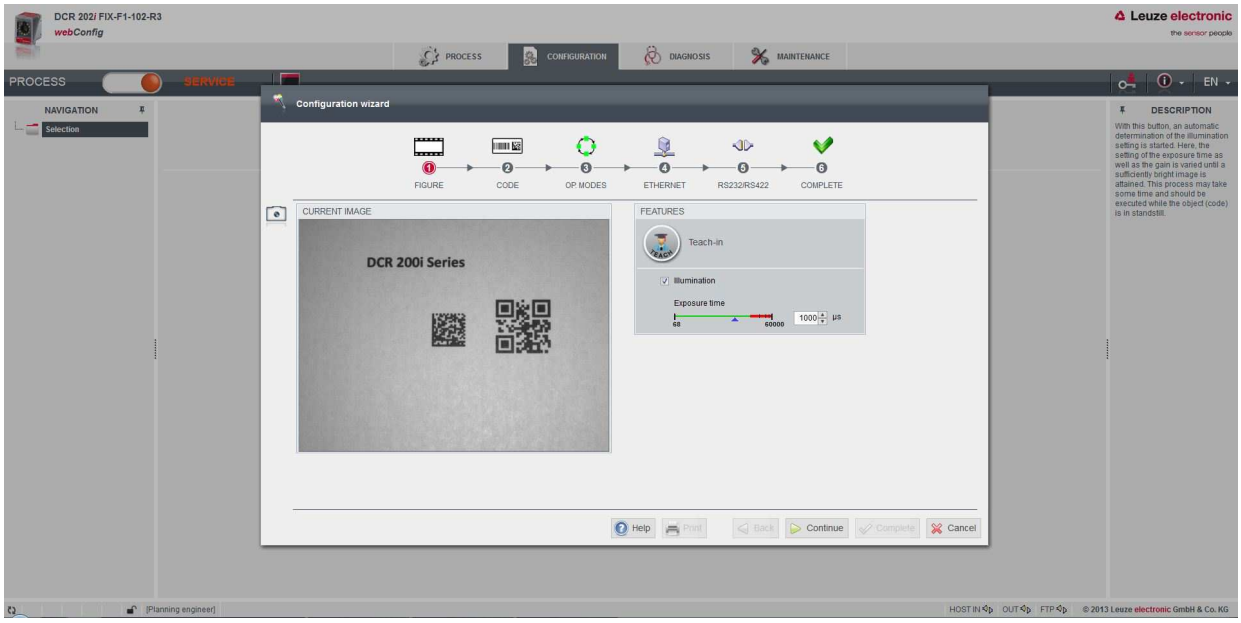


Fig. 9.4: Configuration wizard

- Select **CONFIGURATION >** [Start Wizard].
- Make the settings using the configuration steps presented by the wizard.

| | ***NOTICE*** |
|---|---|
| | The settings are not saved until the final configuration step (FINISH) is performed. |

# 10 PROFINET

## 10.1 Overview

The DCR 248i code reader is designed as a modular field device and is a PROFINET-IO device that communicates cyclically with the assigned PROFINET-IO controller during operation.

The device can be operated as a single device (standalone) with individual device name in a PROFINET-IO star or tree topology. The control must communicate this device name to the participant during the device naming (see chapter 10.3 "Configuring for the Siemens SIMATIC-S7 control").

**Performance characteristics**

The device has the following performance characteristics:

- A GSDML file is available for the device description
- The device family is certified as a PROFINET-IO device according to V2.32
- PROFINET-IO with real-time (RT) communication
- Standard Fast Ethernet (100 Mbit/s) connection (M12 technology)
- Auto-crossover and auto-negotiation
- Cyclical data exchange
- 4-pin, M12 connectors with D-coding are used for the electrical connection
- Identification & maintenance functions (I&M) IM0 – IM4
- The IP address – or name assignment – is set using, e.g., the Siemens STEP7 or TIA development environment or comparable tools
- Cycle time: maximum 4 ms (*MinDeviceInterval*=128)
- Function range acc. to Conformance Class B
- Network load class I

**Communication**

Basic communication and integration takes place via the GSDML file (see chapter 10.2 "GSDML file"). The modules of the GSDML file do not support any configuration of the device functionality. Configuration is performed via other mechanisms, e.g., the webConfig tool or online/XML commands (see chapter 9 "Commissioning – Leuze electronic webConfig tool"; see chapter 11 "Interfaces – Communication").

Each device has a unique MAC address (Media Access Control) that is specified on the name plate. The MAC address (MAC-ID) is linked to an IP address during the course of configuration. The MAC address can be found on the name plate and on an easily removable "Address Link Label” (MAC address) that is also attached to the device.

On delivery, the device is assigned the following network address:

- IP address: 192.168.60.101
- Subnet mask: 255.255.255.0

**Electrical connection**

The device features multiple M 12 connectors / sockets for the electrical connection of the supply voltage, the interface and the switching inputs and outputs (see chapter 7 "Electrical connection").

## 10.2 GSDML file

The functionality of the DCR 248i via the PROFINET interface is defined with input/output data that is defined in the modules of the GSDML file (see chapter 10.4 "PROFINET project modules").

A user-specific configuration tool is used during PLC program creation to integrate the required modules and configure them appropriately for their respective use.

When operating the device on the PROFINET, all input/output data is occupied with default values. If this input/output data is not changed by the user, the device operates with the default settings set by Leuze electronic on delivery. The default settings of the device can be found in the module descriptions.

| | NOTICE |
|---|---|
| | **Observe when configuring PROFINET devices!**<br>↳ **Always** perform the basic configuration using the GSDML file (GSDML=Generic Station Description Markup Language).<br>↳ Download the appropriate GSDML file from the Internet: **www.leuze.com**.<br>↳ In process operation, the input/output data of the respective, activated GSDML modules are exchanged with the control.<br>↳ If you switch the device to the *Service* operating mode via the webConfig tool, the device is disconnected from the PROFINET. |

**General information on the GSDML file**

The term GSD (Generic Station Description) stands for the textual description of a PROFINET device model. For the description of the complex PROFINET device model, the XML-based GSDML (Generic Station Description Markup Language) was introduced.

In the GSDML file, all data necessary for operating the device is described in modules: Input and output data, definition of the control and status bits.

The GSDML file can support an arbitrary number of languages in one file. Every GSDML file contains a version of the DCR 248i device model. This is also reflected in the file name.

The GSDML file is a certified and integral part of the device and must not be changed. The file is not changed by the system either. If parameters are changed in the project tool, for example, these changes are stored by the control in the project, not in the GSDML file.

| | NOTICE |
|---|---|
| | **GSDML file name structure**<br>The file name of the GSDML file is constructed according to the following rule:<br>**GSDML-[GSDML schema version]-Leuze-DCR248i-[date].xml**<br>**[GSDML schema version]** = Version identifier of the GSDML schema version used, e.g., V2.32<br>**[Date]** = Release date of the GSDML file in the format yyyymmdd<br>This date also stands for the release date of the file.<br>Example: **GSDML-V2.32-LEUZE-DCR248i-20170505.xml** |

## 10.3 Configuring for the Siemens SIMATIC-S7 control

The functionality of the device is defined via input/output data, which is organized in modules (see chapter 10.4 "PROFINET project modules"). The modules are part of the GSDML file (see chapter 10.2 "GSDML file").

By using a user-specific configuration tool, such as SIMATIC Manager or TIA Portal for the Siemens SIMATIC S7 control (S7 PLC), the required modules are integrated in a project during PLC programming. These modules are provided by the GSD file.

| | NOTICE |
|---|---|
| | **Observe SIMATIC Manager version!**<br>↳ For the Siemens SIMATIC-S7 control, you need at least SIMATIC Manager version 5.4 + service pack 5 (V5.4+SP5). |

The following steps are necessary for commissioning:

- Start code reader
- Preparation of the control
- Installation of the GSDML file
- Hardware configuration of the control (S7 PLC)
- Transmission of the PROFINET-IO configuration to the IO Controller (S7 PLC)

- Device naming
  - Configuration of the device name
  - Device naming
  - Assigning the device names to the configured IO devices
  - Assignment of MAC address – IP address – individual device names
- Checking device names

**Start code reader**

↳ Connect the +18 … +30 V DC supply voltage (typ. +24 V DC).

⇨ The code reader starts up.

**Prepare the control**

↳ Assign the IO controller (PLC-S7) an IP address.

↳ Prepare the control for consistent data transmission.

**Install the GSDML file**

↳ Download the corresponding GSDML file from the Leuze electronic homepage: **www.leuze.com**.

| | ***NOTICE*** |
|---|---|
| | Alternatively, the GSDML file can be loaded from the device with the webConfig tool (see chapter 9 "Commissioning – Leuze electronic webConfig tool"):<br>**HOME > INSTALLATION > GSDML file**<br>The GSDML file stored in the device is always compatible with the firmware version of the DCR 248i. |

| | ***NOTICE*** |
|---|---|
| | **Do not change the GSDML file!**<br>The GSDML file is a certified and integral part of the device and must not be changed. The file is not changed by the system either.<br>If parameters are changed in the project tool, for example, these changes are stored by the control in the project, not in the GSDML file. |

↳ Install the GSDML file for the subsequent configuration of the code reader.

**Configure the control hardware (S7 PLC)**

↳ Insert the code reader in your project. The PROFINET system is configured with the help of the hardware configuration (HW-Config) of the SIMATIC Manager.

↳ Assign an IP address a unique device name.

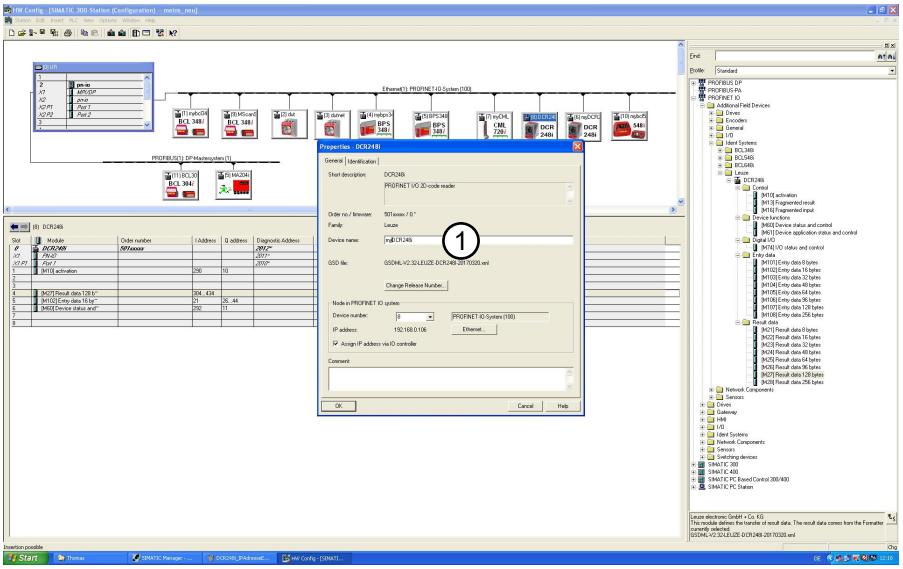

1 Device name

Fig. 10.1: Assignment of the device names to IP addresses

### Transfer the PROFINET configuration to the IO Controller (S7 PLC)

↳ Transfer the PROFINET configuration to the IO Controller (S7 PLC).

Following successful transfer, the following activities take place automatically:

- Check of device names
- Assignment of the IP addresses that were configured in the HW Config to the IO devices
- Establishment of a connection between the IO Controller and configured IO devices
- Cyclical data exchange

| | NOTICE |
|---|---|
| | Participants that have not been "named" cannot be contacted yet at this point in time! |

### Name the device

PROFINET defines the "naming of the device" as the creation of a name-based relationship for a PROFINET device.

↳ Set the device name.

- The PROFINET device has a unique MAC address that is part of the factory settings. The MAC address may be found on the name plate of the device. Multiple devices can be distinguished by the MAC addresses displayed.
- This information is used to assign a unique, plant-specific device name ("NameOfStation") to the device via the "Discovery and Configuration Protocol (DCP)".
- Every time the system is started up, PROFINET uses the DCP protocol for the IP address assignment, provided the IO-device is located in the same subnet.

↳ Assign the device names to the configured IO devices.

- Select the code reader on the basis of the MAC address.
- The code reader is then assigned the unique device name. The device name must match the device name configured in the HW Config.

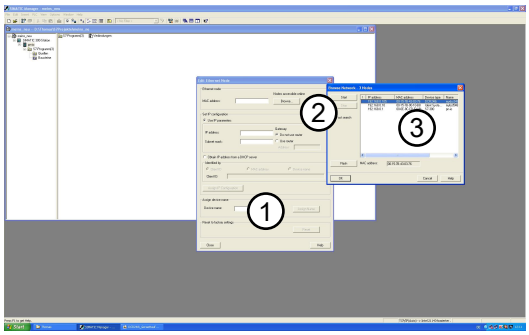


1 Device name
2 [Search] button
3 *MAC address* selection dialog

Fig. 10.2: Assigning the device names to the configured IO devices

↳ Assign the IP address to the MAC address (individual device name).

- At this point, assign another IP address (suggested by the control), a subnet mask and, if required, a router address, and assign this data to the named participant (device name).

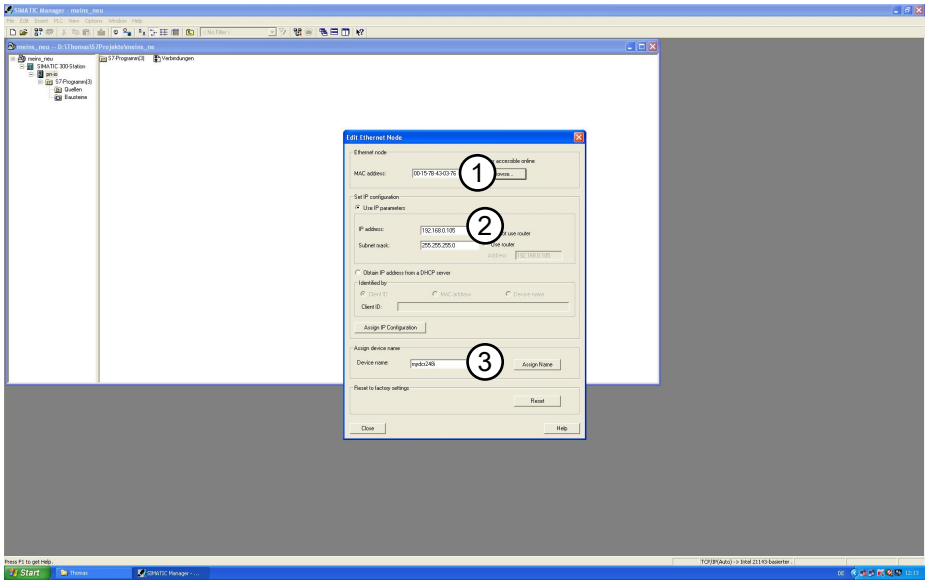


1 Ethernet participant
2 Set IP configuration
3 Device name

Fig. 10.3: MAC address – IP address – individual device name

- From now on, and when programming, only the unique device name (max. 240 characters) is used.

### Check device name

↳ After completing the configuration phase, check the device names that have been assigned.

| NOTICE | |
|---|---|
| ! | **Assign unique device name!**<br>↳ Ensure that the device names are unique and that all participants are located in the same subnet. |

## 10.4 PROFINET project modules

**NOTICE**

**Overwriting of data by PLC!**

- During the configuration phase, the DCR 248i receives data telegrams from the IO controller (master). Before the data telegrams are evaluated and the respective settings are made, all interface-specific settings are reset to default values. This ensures that the settings of modules that are not selected are set to the default values.

**NOTICE**

- You can find the default values of the DCR 248i in the module descriptions.
- Examples for using the modules: see chapter 18.5 "Communication examples".

**NOTICE**

**Behavior of the input/output data**

- The default value of the input data bits after switching on the device corresponds to the specified initial value (generally ZERO).
- The outputs are deactivated during device start-up.
- For output data with status IOPS = Bad, the downstream functions are switched to a safe state. This is the case, for example, if the control is switched to the STOP mode. For example, an activated device or an output is then deactivated.
  In the event of a connection interruption, the device behaves in the same way.

### 10.4.1 Overview of the modules

| Module | Description | Parameter | Inp. data | Outp. data |
|---|---|---|---|---|
| M10<br>see chapter 10.4.2 "Activation" | Activation<br>Control bits for the activation and transfer of the input data. | 1 | 1 | 1 |
| M13<br>see chapter 10.4.3 "Fragmented result" | Fragmented result<br>Transmission of the results in the fragmented mode | 1 | 3 | 0 |
| M16<br>see chapter 10.4.4 "Fragmented entry" | Fragmented entry<br>Transmission of the entry data in the fragmented mode | 1 | 0 | 3 |
| M21<br>see chapter 10.4.5 "Result data 1" | Result data 1<br>Entry information 8 bytes max. | 0 | 11 | 0 |
| M22<br>see chapter 10.4.6 "Result data 2" | Result data 2<br>Entry information 16 bytes max. | 0 | 19 | 0 |
| M23<br>see chapter 10.4.7 "Result data 3" | Result data 3<br>Entry information 32 bytes max. | 0 | 35 | 0 |
| M24<br>see chapter 10.4.8 "Result data 4" | Result data 4<br>Entry information 48 bytes max. | 0 | 51 | 0 |
| M25<br>see chapter 10.4.9 "Result data 5" | Result data 5<br>Entry information 64 bytes max. | 0 | 67 | 0 |

| Module | Description | Parameter | Inp. data | Outp. data |
|---|---|---|---|---|
| M26<br>see chapter 10.4.10 "Result data 6" | Result data 6<br>Entry information 96 bytes max. | 0 | 99 | 0 |
| M27<br>see chapter 10.4.11 "Result data 7" | Result data 7<br>Entry information 128 bytes max. | 0 | 131 | 0 |
| M28<br>see chapter 10.4.12 "Result data 8" | Result data 8<br>Entry information 256 bytes max. | 0 | 259 | 0 |
| M101 –<br>see chapter 10.4.13 "Entry data 1" | Entry data 1<br>Entry information 8 bytes max. | 0 | 1 | 11 |
| M102<br>see chapter 10.4.14 "Entry data 2" | Entry data 2<br>Entry information 16 bytes max. | 0 | 1 | 19 |
| M103<br>see chapter 10.4.15 "Entry data 3" | Entry data 3<br>Entry information 32 bytes max. | 0 | 1 | 35 |
| M104<br>see chapter 10.4.16 "Entry data 4" | Entry data 4<br>Entry information 48 bytes max. | 0 | 1 | 51 |
| M105<br>see chapter 10.4.17 "Entry data 5" | Entry data 5<br>Entry information 64 bytes max. | 0 | 1 | 67 |
| M106<br>see chapter 10.4.18 "Entry data 6" | Entry data 6<br>Entry information 96 bytes max. | 0 | 1 | 99 |
| M107<br>see chapter 10.4.19 "Entry data 7" | Entry data 7<br>Entry information 128 bytes max. | 0 | 1 | 131 |
| M108<br>see chapter 10.4.20 "Entry data 8" | Entry data 8<br>Entry information 256 bytes max. | 0 | 1 | 259 |
| M60<br>see chapter 10.4.21 "Device status and control" | Device status and control<br>Display of the device status as well as control bits for reset and standby | 0 | 1 | 1 |
| M61<br>see chapter 10.4.22 "Device application status and control" | Device application status and control<br>Transfer of application-specific control and status information. | 0 | 2 | 2 |
| M74<br>see chapter 10.4.23 "I/O status and control" | I/O status and control<br>Handling of switching input and switching output signals | 0 | 2 | 1 |

### 10.4.2 Module 10 – Activation

**PROFINET-IO module identifier**

- Module ID: 1010
- Submodule ID: 1

**Description**

The module defines the control signals for activating the device as well as the signals for the control of the result output. A handshake mode must be selected for this function.

In handshake operation, the controller must acknowledge the data reception via the ACK bit before the new data is written into the input area. After acknowledging the last result, the input data is reset (filled with zeros).

Tab. 10.1: Parameter overview module 10

| Parameter | Address | Data type | Value range | Default | Unit | Explanation |
|---|---|---|---|---|---|---|
| Mode | 0 | UN-SIGNED8 | 1: With ACK | 0 | --- | The parameter defines the mode in which the activation module is operated. |
| Parameter length: 1 byte | | | | | | |

Tab. 10.2: Input data structure module 10

| Input data | Address | Data type | Value range | Default | Unit | Explanation |
|---|---|---|---|---|---|---|
| Number of results | 0 | UN-SIGNED8 | 0-255 | 0 | --- | Number of not yet retrieved, complete results. During a possible fragment transmission, this value remains constant until the first fragment of the next result. |
| Input data length: 1 byte | | | | | | |

Tab. 10.3: Output data structure module 10

| Output data | Address | Data type | Value range | Default | Unit | Explanation |
|---|---|---|---|---|---|---|
| Activation signal | 0.0 | Bit | 1 -> 0: Deactivation<br>0 -> 1: Activation | 0 | --- | Signal for activating the device. |
| | 0.1 | Bit | 0 … 1 | 0 | --- | Free |
| | 0.2 | Bit | 0 … 1 | 0 | --- | Free |
| | 0.3 | Bit | | 0 | --- | Free |
| Data acknowledgment | 0.4 | Bit | 0 -> 1: Data has been processed by the master<br>1 -> 0: Data has been processed by the master | 0 | --- | This control bit signals that the transmitted data have been processed by the master. |
| Data reset | 0.5 | Bit | 0 -> 1: Data reset | 0 | --- | Deletes any stored results. For details, see note. |
| Reserved | 0.6 | Bit | | 0 | --- | Free |
| | 0.7 | Bit | | 0 | --- | Free |
| Output data length: 1 byte consistently | | | | | | |

**NOTICE**

**Data reset behavior**

If the data reset control bit is activated, the following actions are carried out:

- Deletion of results that may still be stored.
- Reset of module 13, i.e., even a partially transmitted read result is deleted (see chapter 10.4.3 "Module 13 – Fragmented result").
- Deletion of the input data areas of all modules.
  Exception: The input data of modules 60/61 is not deleted (see chapter 10.4.21 "Module 60 - Device status and control", see chapter 10.4.22 "Module 61 - Device application status and control").
  With the status byte of result modules 21 … 27 and entry data modules 101 … 107, the two toggle bits are not changed.

### 10.4.3 Module 13 – Fragmented result

**PROFINET-IO module identifier**

- Module ID: 1013
- Submodule ID: 1

**Description**

The module defines the output of fragmented results (direction: from device to control). To occupy few i/o-data, the results may be split into several fragments with this module. The fragments can then be transmitted one after another with a handshake.

These settings act on result modules 21 … 28. The presence of this module switches on fragmentation of the result data.

Tab. 10.4: Parameter overview module 13

| Parameter | Address | Data type | Value range | Default | Unit | Explanation |
|---|---|---|---|---|---|---|
| Fragment length | 0 | UN-SIGNED8 | 1-255 | 0 | --- | The parameter defines the maximum length of the result information per fragment. |
| Parameter length: 1 byte | | | | | | |

Tab. 10.5: Input data structure module 13

| Input data | Address | Data type | Value range | Default | Unit | Explanation |
|---|---|---|---|---|---|---|
| Fragment number | 0 | Byte | 0-255 | 0 | --- | Current fragment number |
| Remaining fragments | 1 | Byte | 0-255 | 0 | --- | Number of fragments which still have to be read for a complete result. |
| Fragment size | 2 | UN-SIGNED8 | 0-255 | 0 | --- | Fragment length, always corresponds to the configured fragment length, except for the last fragment. |
| Input data length: 3 bytes, consistently | | | | | | |

### 10.4.4 Module 16 – Fragmented entry

**PROFINET-IO module identifier**

- Module ID: 1016
- Submodule ID: 1

**Description**

The module defines the transfer of fragmented entry data (direction: from control to device). To occupy few I/O data, the entry data may be split into several fragments with this module. The fragments can then be transmitted one after another with a handshake.

These settings act on entry modules 101 … 108. The presence of this module switches on fragmentation of the entry data.

Tab. 10.6: Parameter overview module 16

| Parameter | Address | Data type | Value range | Default | Unit | Explanation |
|---|---|---|---|---|---|---|
| Fragment length | 0 | UN-SIGNED8 | 1-255 | 1 | --- | The parameter defines the maximum length of the entry information per fragment. |
| Parameter length: 1 byte | | | | | | |

Tab. 10.7: Output data structure module 16

| Output data | Address | Data type | Value range | Default | Unit | Explanation |
|---|---|---|---|---|---|---|
| Fragment number | 0 | Byte | 0-255 | 0 | --- | Current fragment number |
| Remaining fragments | 1 | Byte | 0-255 | 0 | --- | Number of fragments which still have to be transmitted for a complete entry. |
| Fragment size | 2 | UN-SIGNED8 | 0-255 | 0 | --- | Fragment length, should always be identical, except for the last fragment to be transferred. |
| Output data length: 3 bytes, consistently | | | | | | |

### 10.4.5 Module 21 – Result data 1

**PROFINET-IO module identifier**

- Module ID: 1021
- Submodule ID: 1

***NOTICE***

- Modules 21 … 28 can only be used one at a time, not simultaneously.
- If the result information (result plus additional information, such as the code quality) does not fit in the selected module width, the information is shortened.
  The transmitted result data length is an indication of shortening of the result information.

**Description**

The module defines the transfer of the result data. The result data comes from the Formatter currently selected. The Formatter can be selected and configured in the webConfig tool (see chapter 9.3 "webConfig tool").

Tab. 10.8: Input data structure module 21

| Input data | Address | Data type | Value range | Default | Unit | Explanation |
|---|---|---|---|---|---|---|
| Activation status | 0.0 | Bit | 0: Deactivated<br>1: Activated | 0 | --- | Displays the current activation status. |
| Reserved | 0.1 | Bit | | 0 | --- | Free |
| User data result or Cmd interpreter response | 0.2 | Bit | 0: User data<br>1: Cmd interpreter response | 0 | --- | Distinction between result from the Formatter and answer from the Cmd interpreter. Makes the distinction easy for the user. |
| Further results in the buffer | 0.3 | Bit | 0: No<br>1: Yes | 0 | --- | Signal indicates whether further results are in the buffer. |
| Buffer overflow | 0.4 | Bit | 0: No<br>1: Yes | 0 | --- | Signal indicates that result buffers are occupied and the device rejects data. |
| New result | 0.5 | Bit | 0->1: New result<br>1->0: New result | 0 | --- | The toggle bit indicates whether a new result is present. |
| Reserved | 0.6 | Bit | | 0 | --- | Free |
| Waiting for acknowledgment | 0.7 | Bit | 0: Base state<br>1: Control waiting for acknowledgement from the master | 0 | --- | This signal represents the internal state of the control. |
| Result data length | 1 | UNSIGNED 16 | 0-65535 | 0 | --- | Data length of the actual result information. |
| Data | 3..10 | 8x<br>UNSIGNED8 | 0-FFh | 0 | --- | Result information with a length of consistently 8 bytes. |
| Input data length: 3 bytes consistently + 8 bytes of result information | | | | | | |

### 10.4.6 Module 22 – Result data 2

**PROFINET-IO module identifier**

- Module ID: 1022
- Submodule ID: 1

**NOTICE**

- Modules 21 … 28 can only be used one at a time, not simultaneously.
- If the result information (result plus additional information, such as the code quality) does not fit in the selected module width, the information is shortened.
  The transmitted result data length is an indication of shortening of the result information.

**Description**

The module defines the transfer of the result data. The result data comes from the Formatter currently selected. The Formatter can be selected and configured in the webConfig tool (see chapter 9.3 "webConfig tool").

Tab. 10.9: Input data structure module 22

| Input data | Address | Data type | Value range | Default | Unit | Explanation |
|---|---|---|---|---|---|---|
| Activation status | 0.0 | Bit | 0: Deactivated<br>1: Activated | 0 | --- | Displays the current activation status. |
| Reserved | 0.1 | Bit | | 0 | --- | Free |
| User data result or Cmd interpreter response | 0.2 | Bit | 0: User data<br>1: Cmd interpreter response | 0 | --- | Distinction between result from the Formatter and answer from the Cmd interpreter. Makes the distinction easy for the user. |
| Further results in the buffer | 0.3 | Bit | 0: No<br>1: Yes | 0 | --- | Signal indicates whether further results are in the buffer. |
| Buffer overflow | 0.4 | Bit | 0: No<br>1: Yes | 0 | --- | Signal indicates that result buffer is occupied and the device rejects data. |
| New result | 0.5 | Bit | 0->1: New result<br>1->0: New result | 0 | --- | The toggle bit indicates whether a new result is present. |
| Reserved | 0.6 | Bit | | 0 | --- | Free |
| Waiting for acknowledgment | 0.7 | Bit | 0: Base state<br>1: Control waiting for acknowledgement from the master | 0 | --- | This signal represents the internal state of the control. |
| Result data length | 1 | UNSIGNED 16 | 0-65535 | 0 | --- | Data length of the actual result information. |
| Data | 3..18 | 16x<br>UNSIGNED8 | 0-FFh | 0 | --- | Result information with a length of consistently 16 bytes. |
| Input data length: 3 bytes consistently + 16 bytes of result information | | | | | | |

### 10.4.7 Module 23 – Result data 3

**PROFINET-IO module identifier**

- Module ID: 1023
- Submodule ID: 1

**NOTICE**

- Modules 21 … 28 can only be used one at a time, not simultaneously.
- If the result information (result plus additional information, such as the code quality) does not fit in the selected module width, the information is shortened.
  The transmitted result data length is an indication of shortening of the result information.

**Description**

The module defines the transfer of the result data. The result data comes from the Formatter currently selected. The Formatter can be selected and configured in the webConfig tool (see chapter 9.3 "webConfig tool").

Tab. 10.10: Input data structure module 23

| Input data | Address | Data type | Value range | Default | Unit | Explanation |
|---|---|---|---|---|---|---|
| Activation status | 0.0 | Bit | 0: Deactivated<br>1: Activated | 0 | --- | Displays the current activation status. |
| Reserved | 0.1 | Bit | | 0 | --- | Free |
| User data result or Cmd interpreter response | 0.2 | Bit | 0: User data<br>1: Cmd interpreter response | 0 | --- | Distinction between result from the Formatter and answer from the Cmd interpreter. Makes the distinction easy for the user. |
| Further results in the buffer | 0.3 | Bit | 0: No<br>1: Yes | 0 | --- | Signal indicates whether further results are in the buffer. |
| Buffer overflow | 0.4 | Bit | 0: No<br>1: Yes | 0 | --- | Signal indicates that result buffer is occupied and the device rejects data. |
| New result | 0.5 | Bit | 0->1: New result<br>1->0: New result | 0 | --- | The toggle bit indicates whether a new result is present. |
| Reserved | 0.6 | Bit | | 0 | --- | Free |
| Waiting for acknowledgment | 0.7 | Bit | 0: Base state<br>1: Control waiting for acknowledgement from the master | 0 | --- | This signal represents the internal state of the control. |
| Result data length | 1 | UNSIGNED 16 | 0-65535 | 0 | --- | Data length of the actual result information. |
| Data | 3..34 | 32x<br>UNSIGNED8 | 0-FFh | 0 | --- | Result information with a length of consistently 32 bytes. |
| Input data length: 3 bytes consistently + 32 bytes of result information | | | | | | |

### 10.4.8 Module 24 – Result data 4

**PROFINET-IO module identifier**

- Module ID: 1024
- Submodule ID: 1

**NOTICE**

- Modules 21 … 28 can only be used one at a time, not simultaneously.
- If the result information (result plus additional information, such as the code quality) does not fit in the selected module width, the information is shortened.
  The transmitted result data length is an indication of shortening of the result information.

**Description**

The module defines the transfer of the result data. The result data comes from the Formatter currently selected. The Formatter can be selected and configured in the webConfig tool (see chapter 9.3 "webConfig tool").

Tab. 10.11: Input data structure module 24

| Input data | Address | Data type | Value range | Default | Unit | Explanation |
|---|---|---|---|---|---|---|
| Activation status | 0.0 | Bit | 0: Deactivated<br>1: Activated | 0 | --- | Displays the current activation status. |
| Reserved | 0.1 | Bit | | 0 | --- | Free |
| User data result or Cmd interpreter response | 0.2 | Bit | 0: User data<br>1: Cmd interpreter response | 0 | --- | Distinction between result from the Formatter and answer from the Cmd interpreter. Makes the distinction easy for the user. |
| Further results in the buffer | 0.3 | Bit | 0: No<br>1: Yes | 0 | --- | Signal indicates whether further results are in the buffer. |
| Buffer overflow | 0.4 | Bit | 0: No<br>1: Yes | 0 | --- | Signal indicates that result buffer is occupied and the device rejects data. |
| New result | 0.5 | Bit | 0->1: New result<br>1->0: New result | 0 | --- | The toggle bit indicates whether a new result is present. |
| Reserved | 0.6 | Bit | | 0 | --- | Free |
| Waiting for acknowledgment | 0.7 | Bit | 0: Base state<br>1: Control waiting for acknowledgement from the master | 0 | --- | This signal represents the internal state of the control. |
| Result data length | 1 | UNSIGNED 16 | 0-65535 | 0 | --- | Data length of the actual result information. |
| Data | 3..50 | 48x<br>UNSIGNED8 | 0-FFh | 0 | --- | Result information with a length of consistently 48 bytes. |
| Input data length: 3 bytes consistently + 48 bytes of result information | | | | | | |

### 10.4.9 Module 25 – Result data 5

**PROFINET-IO module identifier**

- Module ID: 1025
- Submodule ID: 1

**NOTICE**

- Modules 21 … 28 can only be used one at a time, not simultaneously.
- If the result information (result plus additional information, such as the code quality) does not fit in the selected module width, the information is shortened.
  The transmitted result data length is an indication of shortening of the result information.

**Description**

The module defines the transfer of the result data. The result data comes from the Formatter currently selected. The Formatter can be selected and configured in the webConfig tool (see chapter 9.3 "webConfig tool").

Tab. 10.12: Input data structure module 25

| Input data | Address | Data type | Value range | Default | Unit | Explanation |
|---|---|---|---|---|---|---|
| Activation status | 0.0 | Bit | 0: Deactivated<br>1: Activated | 0 | --- | Displays the current activation status. |
| Reserved | 0.1 | Bit | | 0 | --- | Free |
| User data result or Cmd interpreter response | 0.2 | Bit | 0: User data<br>1: Cmd interpreter response | 0 | --- | Distinction between result from the Formatter and answer from the Cmd interpreter. Makes the distinction easy for the user. |
| Further results in the buffer | 0.3 | Bit | 0: No<br>1: Yes | 0 | --- | Signal indicates whether further results are in the buffer. |
| Buffer overflow | 0.4 | Bit | 0: No<br>1: Yes | 0 | --- | Signal indicates that result buffer is occupied and the device rejects data. |
| New result | 0.5 | Bit | 0->1: New result<br>1->0: New result | 0 | --- | The toggle bit indicates whether a new result is present. |
| Reserved | 0.6 | Bit | | 0 | --- | Free |
| Waiting for acknowledgment | 0.7 | Bit | 0: Base state<br>1: Control waiting for acknowledgement from the master | 0 | --- | This signal represents the internal state of the control. |
| Result data length | 1 | UNSIGNED 16 | 0-65535 | 0 | --- | Data length of the actual result information. |
| Data | 3..66 | 64x<br>UNSIGNED8 | 0-FFh | 0 | --- | Result information with a length of consistently 64 bytes. |
| Input data length: 3 bytes consistently + 64 bytes of result information | | | | | | |

### 10.4.10 Module 26 – Result data 6

**PROFINET-IO module identifier**

- Module ID: 1026
- Submodule ID: 1

**NOTICE**

- Modules 21 … 28 can only be used one at a time, not simultaneously.
- If the result information (result plus additional information, such as the code quality) does not fit in the selected module width, the information is shortened.
  The transmitted result data length is an indication of shortening of the result information.

**Description**

The module defines the transfer of the result data. The result data comes from the Formatter currently selected. The Formatter can be selected and configured in the webConfig tool (see chapter 9.3 "webConfig tool").

Tab. 10.13: Input data structure module 26

| Input data | Address | Data type | Value range | Default | Unit | Explanation |
|---|---|---|---|---|---|---|
| Activation status | 0.0 | Bit | 0: Deactivated<br>1: Activated | 0 | --- | Displays the current activation status. |
| Reserved | 0.1 | Bit | | 0 | --- | Free |
| User data result or Cmd interpreter response | 0.2 | Bit | 0: User data<br>1: Cmd interpreter response | 0 | --- | Distinction between result from the Formatter and answer from the Cmd interpreter. Makes the distinction easy for the user. |
| Further results in the buffer | 0.3 | Bit | 0: No<br>1: Yes | 0 | --- | Signal indicates whether further results are in the buffer. |
| Buffer overflow | 0.4 | Bit | 0: No<br>1: Yes | 0 | --- | Signal indicates that result buffer is occupied and the device rejects data. |
| New result | 0.5 | Bit | 0->1: New result<br>1->0: New result | 0 | --- | The toggle bit indicates whether a new result is present. |
| Reserved | 0.6 | Bit | | 0 | --- | Free |
| Waiting for acknowledgment | 0.7 | Bit | 0: Base state<br>1: Control waiting for acknowledgement from the master | 0 | --- | This signal represents the internal state of the control. |
| Result data length | 1 | UNSIGNED 16 | 0-65535 | 0 | --- | Data length of the actual result information. |
| Data | 3..98 | 96x<br>UNSIGNED8 | 0-FFh | 0 | --- | Result information with a length of consistently 96 bytes. |
| Input data length: 3 bytes consistently + 96 bytes of result information | | | | | | |

### 10.4.11 Module 27 – Result data 7

**PROFINET-IO module identifier**

- Module ID: 1027
- Submodule ID: 1

***NOTICE***

- Modules 21 … 28 can only be used one at a time, not simultaneously.
- If the result information (result plus additional information, such as the code quality) does not fit in the selected module width, the information is shortened.
  The transmitted result data length is an indication of shortening of the result information.

**Description**

The module defines the transfer of the result data. The result data comes from the Formatter currently selected. The Formatter can be selected and configured in the webConfig tool (see chapter 9.3 "webConfig tool").

Tab. 10.14: Input data structure module 27

| Input data | Address | Data type | Value range | Default | Unit | Explanation |
|---|---|---|---|---|---|---|
| Activation status | 0.0 | Bit | 0: Deactivated<br>1: Activated | 0 | --- | Displays the current activation status. |
| Reserved | 0.1 | Bit | | 0 | --- | Free |
| User data result or Cmd interpreter response | 0.2 | Bit | 0: User data<br>1: Cmd interpreter response | 0 | --- | Distinction between result from the Formatter and answer from the Cmd interpreter. Makes the distinction easy for the user. |
| Further results in the buffer | 0.3 | Bit | 0: No<br>1: Yes | 0 | --- | Signal indicates whether further results are in the buffer. |
| Buffer overflow | 0.4 | Bit | 0: No<br>1: Yes | 0 | --- | Signal indicates that result buffer is occupied and the device rejects data. |
| New result | 0.5 | Bit | 0->1: New result<br>1->0: New result | 0 | --- | The toggle bit indicates whether a new result is present. |
| Reserved | 0.6 | Bit | | 0 | --- | Free |
| Waiting for acknowledgment | 0.7 | Bit | 0: Base state<br>1: Control waiting for acknowledgement from the master | 0 | --- | This signal represents the internal state of the control. |
| Result data length | 1 | UNSIGNED 16 | 0-65535 | 0 | --- | Data length of the actual result information. |
| Data | 3..130 | 128x<br>UNSIGNED8 | 0-FFh | 0 | --- | Result information with a length of consistently 128 bytes. |
| Input data length: 3 bytes consistently + 128 bytes of result information | | | | | | |

### 10.4.12 Module 28 – Result data 8

**PROFINET-IO module identifier**

- Module ID: 1028
- Submodule ID: 1

***NOTICE***

- Modules 21 … 28 can only be used one at a time, not simultaneously.
- If the result information (result plus additional information, such as the code quality) does not fit in the selected module width, the information is shortened.
  The transmitted result data length is an indication of shortening of the result information.

**Description**

The module defines the transfer of the result data. The result data comes from the Formatter currently selected. The Formatter can be selected and configured in the webConfig tool (see chapter 9.3 "webConfig tool").

Tab. 10.15: Input data structure module 28

| Input data | Address | Data type | Value range | Default | Unit | Explanation |
|---|---|---|---|---|---|---|
| Activation status | 0.0 | Bit | 0: Deactivated<br>1: Activated | 0 | --- | Displays the current activation status. |
| Reserved | 0.1 | Bit | | 0 | --- | Free |
| User data result or Cmd interpreter response | 0.2 | Bit | 0: User data<br>1: Cmd interpreter response | 0 | --- | Distinction between result from the Formatter and answer from the Cmd interpreter. Makes the distinction easy for the user. |
| Further results in the buffer | 0.3 | Bit | 0: No<br>1: Yes | 0 | --- | Signal indicates whether further results are in the buffer. |
| Buffer overflow | 0.4 | Bit | 0: No<br>1: Yes | 0 | --- | Signal indicates that result buffer is occupied and the device rejects data. |
| New result | 0.5 | Bit | 0->1: New result<br>1->0: New result | 0 | --- | The toggle bit indicates whether a new result is present. |
| Reserved | 0.6 | Bit | | 0 | --- | Free |
| Waiting for acknowledgment | 0.7 | Bit | 0: Base state<br>1: Control waiting for acknowledgement from the master | 0 | --- | This signal represents the internal state of the control. |
| Result data length | 1 | UNSIGNED 16 | 0-65535 | 0 | --- | Data length of the actual result information. |
| Data | 3..258 | 256x<br>UNSIGNED8 | 0-FFh | 0 | --- | Result information with a length of consistently 256 bytes. |
| Input data length: 3 bytes consistently + 256 bytes of result information | | | | | | |

### 10.4.13 Module 101 – Entry data 1

**PROFINET-IO module identifier**

- Module ID: 1101
- Submodule ID: 1

***NOTICE***

- Data reset does **not** affect the output data toggle bits
- If fragmentation is used, the application must set the output data of the entry data fragmentation module for each fragment that is to be transmitted before the toggle bit is toggled in the entry data module (see chapter 10.4.4 "Module 16 – Fragmented entry").

**Description**

The module defines the transfer of entry data to a command interpreter (Cmd interpreter) in the device.

Tab. 10.16: Input data structure module 101

| Input data | Address | Data type | Value range | Default | Unit | Explanation |
|---|---|---|---|---|---|---|
| Data acceptance toggle bit | 0.0 | Bit | 0->1: Data have been accepted<br>1->0: Data have been accepted | 0 | --- | The signal shows that the device has accepted the data or the data fragment. |
| Data rejection toggle bit | 0.1 | Bit | 0->1: Data have NOT been accepted<br>1->0: Data have NOT been accepted | 0 | --- | The device has rejected the acceptance of the data or the data fragment. |
| Reserved | 0.2 | Bit | | 0 | --- | Free |
| | 0.3 | Bit | | 0 | --- | Free |
| Error code | 0.4-0.7 | Bit | 0: No error<br>1: Receive buffer overflow<br>2: Sequence error<br>3: Invalid length entry<br>4: Invalid fragment length entry<br>5: Length change in a sequence | 0 | --- | Cause of error for rejection of the fragment. |
| Input data length: 1 byte | | | | | | |

Tab. 10.17: Output data structure module 101

| Output data | Address | Data type | Value range | Default | Unit | Explanation |
|---|---|---|---|---|---|---|
| Reserved | 0.0 | | | 0 | | Free |
| | 0.1 | | | 0 | | Free |
| | 0.2 | | | 0 | | Free |
| | 0.3 | | | 0 | --- | Free |
| | 0.4 | | | 0 | --- | Free |
| New entry | 0.5 | Bit | 0 -> 1: New entry<br>1 -> 0: New entry | 0 | --- | The toggle bit shows whether new entry data is present |
| Reserved | 0.6 | Bit | | 0 | --- | Free |
| | 0.7 | Bit | | 0 | --- | Free |
| Entry data length | 1 | UNSIGNED16 | 0-65535 | 0 | --- | Data length of the actual information. |
| Data | 3..10 | 8x<br>UNSIGNED8 | 0-FFh | 0 | --- | Information with a length of consistently 8 bytes. |
| Output data length: 3 bytes consistently + 8 bytes of result information | | | | | | |

### 10.4.14 Module 102 – Entry data 2

**PROFINET-IO module identifier**

- Module ID: 1102
- Submodule ID: 1

**NOTICE**

- Data reset does **not** affect the output data toggle bits
- If fragmentation is used, the application must set the output data of the entry data fragmentation module for each fragment that is to be transmitted before the toggle bit is toggled in the entry data module (see chapter 10.4.4 "Module 16 – Fragmented entry").

**Description**

The module defines the transfer of entry data to a command interpreter (Cmd interpreter) in the device.

Tab. 10.18: Input data structure module 102

| Input data | Address | Data type | Value range | Default | Unit | Explanation |
|---|---|---|---|---|---|---|
| Data acceptance toggle bit | 0.0 | Bit | 0->1: Data have been accepted<br>1->0: Data have been accepted | 0 | --- | The signal shows that the device has accepted the data or the data fragment. |
| Data rejection toggle bit | 0.1 | Bit | 0->1: Data have NOT been accepted<br>1->0: Data have NOT been accepted | 0 | --- | The device has rejected the acceptance of the data or the data fragment. |
| Reserved | 0.2 | Bit | | 0 | --- | Free |
| | 0.3 | Bit | | 0 | --- | Free |
| Error code | 0.4-0.7 | Bit | 0: No error<br>1: Receive buffer overflow<br>2: Sequence error<br>3: Invalid length entry<br>4: Invalid fragment length entry<br>5: Length change in a sequence | 0 | --- | Cause of error for rejection of the fragment. |
| Input data length: 1 byte | | | | | | |

Tab. 10.19: Output data structure module 102

| Output data | Address | Data type | Value range | Default | Unit | Explanation |
|---|---|---|---|---|---|---|
| Reserved | 0.0 | | | 0 | | Free |
| | 0.1 | | | 0 | | Free |
| | 0.2 | | | 0 | | Free |
| | 0.3 | | | 0 | --- | Free |
| | 0.4 | | | 0 | --- | Free |

| Output data | Address | Data type | Value range | Default | Unit | Explanation |
|---|---|---|---|---|---|---|
| New entry | 0.5 | Bit | 0 -> 1: New entry<br>1 -> 0: New entry | 0 | --- | The toggle bit shows whether new entry data is present |
| Reserved | 0.6 | Bit | | 0 | --- | Free |
| | 0.7 | Bit | | 0 | --- | Free |
| Entry data length | 1 | UN-SIGNED16 | 0-65535 | 0 | --- | Data length of the actual information. |
| Data | 3..18 | 16x<br>UN-SIGNED8 | 0-FFh | 0 | --- | Information with a length of consistently 16 bytes. |
| Output data length: 3 bytes consistently + 16 bytes of result information | | | | | | |

### 10.4.15 Module 103 – Entry data 3

**PROFINET-IO module identifier**

- Module ID: 1103
- Submodule ID: 1

**NOTICE**

- Data reset does **not** affect the output data toggle bits
- If fragmentation is used, the application must set the output data of the entry data fragmentation module for each fragment that is to be transmitted before the toggle bit is toggled in the entry data module (see chapter 10.4.4 "Module 16 – Fragmented entry").

**Description**

The module defines the transfer of entry data to a command interpreter (Cmd interpreter) in the device.

Tab. 10.20: Input data structure module 103

| Input data | Address | Data type | Value range | Default | Unit | Explanation |
|---|---|---|---|---|---|---|
| Data acceptance toggle bit | 0.0 | Bit | 0->1: Data have been accepted<br>1->0: Data have been accepted | 0 | --- | The signal shows that the device has accepted the data or the data fragment. |
| Data rejection toggle bit | 0.1 | Bit | 0->1: Data have NOT been accepted<br>1->0: Data have NOT been accepted | 0 | --- | The device has rejected the acceptance of the data or the data fragment. |
| Reserved | 0.2 | Bit | | 0 | --- | Free |
| | 0.3 | Bit | | 0 | --- | Free |

| Input data | Address | Data type | Value range | Default | Unit | Explanation |
|---|---|---|---|---|---|---|
| Error code | 0.4-0.7 | Bit | 0: No error<br>1: Receive buffer overflow<br>2: Sequence error<br>3: Invalid length entry<br>4: Invalid fragment length entry<br>5: Length change in a sequence | 0 | --- | Cause of error for rejection of the fragment. |
| Input data length: 1 byte | | | | | | |

Tab. 10.21: Output data structure module 103

| Output data | Address | Data type | Value range | Default | Unit | Explanation |
|---|---|---|---|---|---|---|
| Reserved | 0.0 | | | 0 | | Free |
| | 0.1 | | | 0 | | Free |
| | 0.2 | | | 0 | | Free |
| | 0.3 | | | 0 | --- | Free |
| | 0.4 | | | 0 | --- | Free |
| New entry | 0.5 | Bit | 0 -> 1: New entry<br>1 -> 0: New entry | 0 | --- | The toggle bit shows whether new entry data is present |
| Reserved | 0.6 | Bit | | 0 | --- | Free |
| | 0.7 | Bit | | 0 | --- | Free |
| Entry data length | 1 | UNSIGNED16 | 0-65535 | 0 | --- | Data length of the actual information. |
| Data | 3..34 | 32x UNSIGNED8 | 0-FFh | 0 | --- | Information with a length of consistently 32 bytes. |
| Output data length: 3 bytes consistently + 32 bytes of result information | | | | | | |

### 10.4.16 Module 104 – Entry data 4

**PROFINET-IO module identifier**

- Module ID: 1104
- Submodule ID: 1

***NOTICE***

- Data reset does **not** affect the output data toggle bits
- If fragmentation is used, the application must set the output data of the entry data fragmentation module for each fragment that is to be transmitted before the toggle bit is toggled in the entry data module (see chapter 10.4.4 "Module 16 – Fragmented entry").

**Description**

The module defines the transfer of entry data to a command interpreter (Cmd interpreter) in the device.

Tab. 10.22: Input data structure module 104

| Input data | Address | Data type | Value range | Default | Unit | Explanation |
|---|---|---|---|---|---|---|
| Data acceptance toggle bit | 0.0 | Bit | 0->1: Data have been accepted<br>1->0: Data have been accepted | 0 | --- | The signal shows that the device has accepted the data or the data fragment. |
| Data rejection toggle bit | 0.1 | Bit | 0->1: Data have NOT been accepted<br>1->0: Data have NOT been accepted | 0 | --- | The device has rejected the acceptance of the data or the data fragment. |
| Reserved | 0.2 | Bit | | 0 | --- | Free |
| | 0.3 | Bit | | 0 | --- | Free |
| Error code | 0.4-0.7 | Bit | 0: No error<br>1: Receive buffer overflow<br>2: Sequence error<br>3: Invalid length entry<br>4: Invalid fragment length entry<br>5: Length change in a sequence | 0 | --- | Cause of error for rejection of the fragment. |
| Input data length: 1 byte | | | | | | |

Tab. 10.23: Output data structure module 104

| Output data | Address | Data type | Value range | Default | Unit | Explanation |
|---|---|---|---|---|---|---|
| Reserved | 0.0 | | | 0 | | Free |
| | 0.1 | | | 0 | | Free |
| | 0.2 | | | 0 | | Free |
| | 0.3 | | | 0 | --- | Free |
| | 0.4 | | | 0 | --- | Free |
| New entry | 0.5 | Bit | 0 -> 1: New entry<br>1 -> 0: New entry | 0 | --- | The toggle bit shows whether new entry data is present |
| Reserved | 0.6 | Bit | | 0 | --- | Free |
| | 0.7 | Bit | | 0 | --- | Free |
| Entry data length | 1 | UNSIGNED16 | 0-65535 | 0 | --- | Data length of the actual information. |
| Data | 3..50 | 48x<br>UNSIGNED8 | 0-FFh | 0 | --- | Information with a length of consistently 48 bytes. |
| Output data length: 3 bytes consistently + 48 bytes of result information | | | | | | |

### 10.4.17 Module 105 – Entry data 5

**PROFINET-IO module identifier**

- Module ID: 1105
- Submodule ID: 1

**NOTICE**

- Data reset does **not** affect the output data toggle bits
- If fragmentation is used, the application must set the output data of the entry data fragmentation module for each fragment that is to be transmitted before the toggle bit is toggled in the entry data module (see chapter 10.4.4 "Module 16 – Fragmented entry").

**Description**

The module defines the transfer of entry data to a command interpreter (Cmd interpreter) in the device.

Tab. 10.24: Input data structure module 105

| Input data | Address | Data type | Value range | Default | Unit | Explanation |
|---|---|---|---|---|---|---|
| Data acceptance toggle bit | 0.0 | Bit | 0->1: Data have been accepted<br>1->0: Data have been accepted | 0 | --- | The signal shows that the device has accepted the data or the data fragment. |
| Data rejection toggle bit | 0.1 | Bit | 0->1: Data have NOT been accepted<br>1->0: Data have NOT been accepted | 0 | --- | The device has rejected the acceptance of the data or the data fragment. |
| Reserved | 0.2 | Bit | | 0 | --- | Free |
| | 0.3 | Bit | | 0 | --- | Free |
| Error code | 0.4-0.7 | Bit | 0: No error<br>1: Receive buffer overflow<br>2: Sequence error<br>3: Invalid length entry<br>4: Invalid fragment length entry<br>5: Length change in a sequence | 0 | --- | Cause of error for rejection of the fragment. |
| Input data length: 1 byte | | | | | | |

Tab. 10.25: Output data structure module 105

| Output data | Address | Data type | Value range | Default | Unit | Explanation |
|---|---|---|---|---|---|---|
| Reserved | 0.0 | | | 0 | | Free |
| | 0.1 | | | 0 | | Free |
| | 0.2 | | | 0 | | Free |
| | 0.3 | | | 0 | --- | Free |
| | 0.4 | | | 0 | --- | Free |

| Output data | Address | Data type | Value range | Default | Unit | Explanation |
|---|---|---|---|---|---|---|
| New entry | 0.5 | Bit | 0 -> 1: New entry<br>1 -> 0: New entry | 0 | --- | The toggle bit shows whether new entry data is present |
| Reserved | 0.6 | Bit | | 0 | --- | Free |
| | 0.7 | Bit | | 0 | --- | Free |
| Entry data length | 1 | UN-SIGNED16 | 0-65535 | 0 | --- | Data length of the actual information. |
| Data | 3..66 | 64x<br>UN-SIGNED8 | 0-FFh | 0 | --- | Information with a length of consistently 64 bytes. |
| Output data length: 3 bytes consistently + 64 bytes of result information | | | | | | |

### 10.4.18 Module 106 – Entry data 6

**PROFINET-IO module identifier**

- Module ID: 1106
- Submodule ID: 1

**NOTICE**

- Data reset does **not** affect the output data toggle bits
- If fragmentation is used, the application must set the output data of the entry data fragmentation module for each fragment that is to be transmitted before the toggle bit is toggled in the entry data module (see chapter 10.4.4 "Module 16 – Fragmented entry").

**Description**

The module defines the transfer of entry data to a command interpreter (Cmd interpreter) in the device.

Tab. 10.26: Input data structure module 106

| Input data | Address | Data type | Value range | Default | Unit | Explanation |
|---|---|---|---|---|---|---|
| Data acceptance toggle bit | 0.0 | Bit | 0->1: Data have been accepted<br>1->0: Data have been accepted | 0 | --- | The signal shows that the device has accepted the data or the data fragment. |
| Data rejection toggle bit | 0.1 | Bit | 0->1: Data have NOT been accepted<br>1->0: Data have NOT been accepted | 0 | --- | The device has rejected the acceptance of the data or the data fragment. |
| Reserved | 0.2 | Bit | | 0 | --- | Free |
| | 0.3 | Bit | | 0 | --- | Free |

| Input data | Address | Data type | Value range | Default | Unit | Explanation |
|---|---|---|---|---|---|---|
| Error code | 0.4-0.7 | Bit | 0: No error<br>1: Receive buffer overflow<br>2: Sequence error<br>3: Invalid length entry<br>4: Invalid fragment length entry<br>5: Length change in a sequence | 0 | --- | Cause of error for rejection of the fragment. |
| Input data length: 1 byte | | | | | | |

Tab. 10.27: Output data structure module 106

| Output data | Address | Data type | Value range | Default | Unit | Explanation |
|---|---|---|---|---|---|---|
| Reserved | 0.0 | | | 0 | | Free |
| | 0.1 | | | 0 | | Free |
| | 0.2 | | | 0 | | Free |
| | 0.3 | | | 0 | --- | Free |
| | 0.4 | | | 0 | --- | Free |
| New entry | 0.5 | Bit | 0 -> 1: New entry<br>1 -> 0: New entry | 0 | --- | The toggle bit shows whether new entry data is present |
| Reserved | 0.6 | Bit | | 0 | --- | Free |
| | 0.7 | Bit | | 0 | --- | Free |
| Entry data length | 1 | UNSIGNED16 | 0-65535 | 0 | --- | Data length of the actual information. |
| Data | 3..98 | 96x<br>UNSIGNED8 | 0-FFh | 0 | --- | Information with a length of consistently 96 bytes. |
| Output data length: 3 bytes consistently + 96 bytes of result information | | | | | | |

### 10.4.19 Module 107 – Entry data 7

**PROFINET-IO module identifier**

- Module ID: 1107
- Submodule ID: 1

***NOTICE***

- Data reset does **not** affect the output data toggle bits
- If fragmentation is used, the application must set the output data of the entry data fragmentation module for each fragment that is to be transmitted before the toggle bit is toggled in the entry data module (see chapter 10.4.4 "Module 16 – Fragmented entry").

**Description**

The module defines the transfer of entry data to a command interpreter (Cmd interpreter) in the device.

Tab. 10.28: Input data structure module 107

| Input data | Address | Data type | Value range | Default | Unit | Explanation |
|---|---|---|---|---|---|---|
| Data acceptance toggle bit | 0.0 | Bit | 0->1: Data have been accepted<br>1->0: Data have been accepted | 0 | --- | The signal shows that the device has accepted the data or the data fragment. |
| Data rejection toggle bit | 0.1 | Bit | 0->1: Data have NOT been accepted<br>1->0: Data have NOT been accepted | 0 | --- | The device has rejected the acceptance of the data or the data fragment. |
| Reserved | 0.2 | Bit | | 0 | --- | Free |
| | 0.3 | Bit | | 0 | --- | Free |
| Error code | 0.4-0.7 | Bit | 0: No error<br>1: Receive buffer overflow<br>2: Sequence error<br>3: Invalid length entry<br>4: Invalid fragment length entry<br>5: Length change in a sequence | 0 | --- | Cause of error for rejection of the fragment. |
| Input data length: 1 byte | | | | | | |

Tab. 10.29: Output data structure module 107

| Output data | Address | Data type | Value range | Default | Unit | Explanation |
|---|---|---|---|---|---|---|
| Reserved | 0.0 | | | 0 | | Free |
| | 0.1 | | | 0 | | Free |
| | 0.2 | | | 0 | | Free |
| | 0.3 | | | 0 | --- | Free |
| | 0.4 | | | 0 | --- | Free |
| New entry | 0.5 | Bit | 0 -> 1: New entry<br>1 -> 0: New entry | 0 | --- | The toggle bit shows whether new entry data is present |
| Reserved | 0.6 | Bit | | 0 | --- | Free |
| | 0.7 | Bit | | 0 | --- | Free |
| Entry data length | 1 | UNSIGNED16 | 0-65535 | 0 | --- | Data length of the actual information. |
| Data | 3..130 | 128x<br>UNSIGNED8 | 0-FFh | 0 | --- | Information with a length of consistently 128 bytes. |
| Output data length: 3 bytes consistently + 128 bytes of result information | | | | | | |

### 10.4.20 Module 108 – Entry data 8

**PROFINET-IO module identifier**

- Module ID: 1108
- Submodule ID: 1

**NOTICE**

- Data reset does **not** affect the output data toggle bits
- If fragmentation is used, the application must set the output data of the entry data fragmentation module for each fragment that is to be transmitted before the toggle bit is toggled in the entry data module (see chapter 10.4.4 "Module 16 – Fragmented entry").

**Description**

The module defines the transfer of entry data to a command interpreter (Cmd interpreter) in the device.

Tab. 10.30: Input data structure module 108

| Input data | Address | Data type | Value range | Default | Unit | Explanation |
|---|---|---|---|---|---|---|
| Data acceptance toggle bit | 0.0 | Bit | 0->1: Data have been accepted<br>1->0: Data have been accepted | 0 | --- | The signal shows that the device has accepted the data or the data fragment. |
| Data rejection toggle bit | 0.1 | Bit | 0->1: Data have NOT been accepted<br>1->0: Data have NOT been accepted | 0 | --- | The device has rejected the acceptance of the data or the data fragment. |
| Reserved | 0.2 | Bit | | 0 | --- | Free |
| | 0.3 | Bit | | 0 | --- | Free |
| Error code | 0.4-0.7 | Bit | 0: No error<br>1: Receive buffer overflow<br>2: Sequence error<br>3: Invalid length entry<br>4: Invalid fragment length entry<br>5: Length change in a sequence | 0 | --- | Cause of error for rejection of the fragment. |
| Input data length: 1 byte | | | | | | |

Tab. 10.31: Output data structure module 108

| Output data | Address | Data type | Value range | Default | Unit | Explanation |
|---|---|---|---|---|---|---|
| Reserved | 0.0 | | | 0 | | Free |
| | 0.1 | | | 0 | | Free |
| | 0.2 | | | 0 | | Free |
| | 0.3 | | | 0 | --- | Free |
| | 0.4 | | | 0 | --- | Free |

| Output data | Address | Data type | Value range | Default | Unit | Explanation |
|---|---|---|---|---|---|---|
| New entry | 0.5 | Bit | 0 -> 1: New entry<br>1 -> 0: New entry | 0 | --- | The toggle bit shows whether new entry data is present |
| Reserved | 0.6 | Bit | | 0 | --- | Free |
| | 0.7 | Bit | | 0 | --- | Free |
| Entry data length | 1 | UN-SIGNED16 | 0-65535 | 0 | --- | Data length of the actual information. |
| Data | 3..258 | 256x<br>UN-SIGNED8 | 0-FFh | 0 | --- | Information with a length of consistently 256 bytes. |
| Output data length: 3 bytes consistently + 356 bytes of result information | | | | | | |

### 10.4.21 Module 60 - Device status and control

**PROFINET-IO module identifier**

- Module ID: 1060
- Submodule ID: 1

**Description**

The module contains the display of the device status as well as control bits for triggering a reset or putting the device into standby mode.

Tab. 10.32: Input data structure module 60

| Input data | Address | Data type | Value range | Default | Unit | Explanation |
|---|---|---|---|---|---|---|
| Device status | 0 | UN-SIGNED 8 | 10: Standby<br>11: Service<br>15: Device is ready<br>0x80: Error<br>0x81: Warning | 0 | --- | This byte represents the device status. |
| Input data length: 1 byte | | | | | | |

Tab. 10.33: Output data structure module 60

| Output data | Address | Data type | Value range | Default | Unit | Explanation |
|---|---|---|---|---|---|---|
| Reserved | 0.0 | Bit | | 0 | --- | Free |
| Error acknowledge | 0.1 | Bit | 0->1: Error Acknowledge<br>1->0: Error Acknowledge | 0 | --- | This control bit confirms and deletes errors or warnings that may be present in the system.<br>It acts like a toggle bit. |
| Reserved | 0.2-0.5 | Bit | | 0 | --- | Free |
| System reset | 0.6 | Bit | 0: Run<br>0->1: Reset | 0 | --- | The control bit triggers a system reset if the level changes from 0 to 1. |
| Standby | 0.7 | Bit | 0: Standby off<br>1: Standby on | 0 | --- | Activates the standby function |
| Output data length: 1 byte | | | | | | |

### 10.4.22 Module 61 - Device application status and control

**PROFINET-IO module identifier**

- Module ID: 1061
- Submodule ID: 1

**Description**

From the viewpoint of the communication, the module contains generic status and control information which can be interpreted for each device in the GSDML file and in the device application.

Tab. 10.34: Input data structure module 61

| Input data | Address | Data type | Value range | Default | Unit | Explanation |
|---|---|---|---|---|---|---|
| Reserved | 0 | Byte | --- | 0 | --- | Reserved |
| Positive decoding | 1.0 | Bit | 0, 1 | 0 | --- | Decoding order completed successfully |
| Negative decoding | 1.1 | Bit | 0, 1 | 0 | --- | Decoding order NOT completed successfully |
| Pos. ref. comparison | 1.2 | Bit | 0, 1 | 0 | --- | Positive reference code comparison |
| Neg. ref. comparison | 1.3 | Bit | 0, 1 | 0 | --- | Negative reference code comparison |
| Reserved | 1.4-1.7 | Bits | --- | 0 | --- | Reserved |
| Input data length: 2 bytes | | | | | | |

Tab. 10.35: Output data structure module 61

| Output data | Address | Data type | Value range | Default | Unit | Explanation |
|---|---|---|---|---|---|---|
| Not used | 0 | Byte | | 0 | --- | |
| Auto-setup | 1.0 | Bit | 0->1: Error Acknowledge<br>1->0: Error Acknowledge | | --- | This control bit starts the auto setup function. |
| Reference code teach | 1.1 | | | | --- | This control bit starts the teach function. |
| Not used | 1.2-1.7 | Bit Area | | 0 | --- | |
| Output data length: 2 bytes | | | | | | |

### 10.4.23 Module 74 – I/O status and control

**PROFINET-IO module identifier**

- Module ID: 1074
- Submodule ID: 1

**Description**

The module defines the handling of switching input and switching output signals.

Tab. 10.36: Input data structure module 74

| Input data | Address | Data type | Value range | Default | Unit | Explanation |
|---|---|---|---|---|---|---|
| State 1 | 0.0 | Bit | 0.1 | 0 | --- | Signal state of the switching input 1. |
| State 2 | 0.1 | Bit | 0.1 | 0 | --- | Signal state of the switching input 2. |

| Input data | Address | Data type | Value range | Default | Unit | Explanation |
|---|---|---|---|---|---|---|
| State 3 | 0.2 | Bit | 0.1 | 0 | --- | Signal state of the switching input/output 3. |
| State 4 | 0.3 | Bit | 0.1 | 0 | --- | Signal state of the switching input/output 4. |
| Comparison state switching output 1<br>(Event Counter) | 1.0 | Bit | 0: Not exceeded<br>1: Exceeded | 0 | --- | Indicates whether the event counter has exceeded the set comparative value.<br>The bit is reset to the initial value by resetting the event counter. |
| Switching output 1<br>Comparison state toggle bit<br>(Event Counter) | 1.1 | Bit | 0->1: Event counter exceeded<br>1->0: Event counter exceeded again | 0 | --- | If SWOUT switches several times was configured as comparison mode, this bit is toggled each time the event counter is exceeded.<br>The bit is reset to the initial value by resetting the event counter. |
| Comparison state switching output 2<br>(Event Counter) | 1.2 | Bit | 0: Not exceeded<br>1: Exceeded | 0 | --- | Indicates whether the event counter has exceeded the set comparative value.<br>The bit is reset to the init. value by resetting the event counter. |
| Switching output 2<br>Comparison state toggle bit<br>(Event Counter) | 1.3 | Bit | 0->1: Event counter exceeded<br>1->0: Event counter exceeded again | 0 | --- | If SWOUT switches several times was configured as comparison mode, this bit is toggled each time the event counter is exceeded.<br>The bit is reset to the initial value by resetting the event counter. |
| Comparison state switching output 3<br>(Event Counter) | 1.4 | Bit | 0: Not exceeded<br>1: Exceeded | 0 | --- | Indicates whether the event counter has exceeded the set comparative value.<br>The bit is reset to the initial value by resetting the event counter. |

| Input data | Address | Data type | Value range | Default | Unit | Explanation |
|---|---|---|---|---|---|---|
| Switching output 3<br>Comparison state toggle bit<br>(Event Counter) | 1.5 | Bit | 0->1: Event counter exceeded<br>1->0: Event counter exceeded again | 0 | --- | If SWOUT switches several times was configured as comparison mode, this bit is toggled each time the event counter is exceeded.<br>The bit is reset to the initial value by resetting the event counter. |
| Comparison state switching output 4<br>(Event Counter) | 1.6 | Bit | 0: Not exceeded<br>1: Exceeded | 0 | --- | Indicates whether the event counter has exceeded the set comparative value.<br>The bit is reset to the initial value by resetting the event counter. |
| Switching output 4<br>Comparison state toggle bit<br>(Event Counter) | 1.7 | Bit | 0->1: Event counter exceeded<br>1->0: Event counter exceeded again | 0 | --- | If SWOUT switches several times was configured as comparison mode, this bit is toggled each time the event counter is exceeded.<br>The bit is reset to the initial value by resetting the event counter. |
| Input data length: 2 bytes | | | | | | |

Tab. 10.37: Output data structure module 74

| Output data | Address | Data type | Value range | Default | Unit | Explanation |
|---|---|---|---|---|---|---|
| Switching output 1 | 0.0 | Bit | 0: Switching output 0<br>1: Switching output 1 | 0 | --- | Sets the state of switching output 1 |
| Switching output 2 | 0.1 | Bit | 0: Switching output 0<br>1: Switching output 1 | 0 | --- | Sets the state of switching output 2 |
| Switching output 3 | 0.2 | Bit | 0: Switching output 0<br>1: Switching output 1 | 0 | --- | Sets the state of switching output 3 |
| Switching output 4 | 0.3 | Bit | 0: Switching output 0<br>1: Switching output 1 | 0 | --- | Sets the state of switching output 4 |
| Reset Event Counter<br>Switching output 1 | 0.4 | Bit | 0 -> 1: Perform reset<br>1 -> 0: No function | 0 | --- | Sets the event counter of the activation function [AF] for switching output 1 back to zero. |

| Output data | Address | Data type | Value range | Default | Unit | Explanation |
|---|---|---|---|---|---|---|
| Reset Event Counter<br>Switching output 2 | 0.5 | Bit | 0 -> 1: Perform reset<br>1 -> 0: No function | 0 | --- | Sets the event counter of the activation function [AF] for switching output 2 back to zero. |
| Reset Event Counter<br>Switching output 3 | 0.6 | Bit | 0 -> 1: Perform reset<br>1 -> 0: No function | 0 | --- | Sets the event counter of the activation function [AF] for switching output 3 back to zero. |
| Reset Event Counter<br>Switching output 4 | 0.7 | Bit | 0 -> 1: Perform reset<br>1 -> 0: No function | 0 | --- | Sets the event counter of the activation function [AF] for switching output 4 back to zero. |
| Output data length: 1 byte | | | | | | |

# 11 Interfaces – Communication

Commands can be used to send commands directly to the code reader for control and configuration. The following transmission options are available for the commands:

- Online commands via the Ethernet or RS 232/RS 422 interface (see chapter 11.1 "Online commands")
- XML-based communication via the Ethernet interface (see chapter 11.2 "XML-based communication")

## 11.1 Online commands

### 11.1.1 Overview of commands and parameters

Online commands can be used to send commands directly to the code reader for control and configuration. For this, the code reader has to be connected to a computer (host) via the serial interface or the Ethernet interface (see chapter 8.3.4 "Ethernet host communication").

Online commands offer the following options for controlling and configuring the code reader:

- Control/decode the reading gate
- Read/write/copy parameters
- Carry out an automatic configuration
- Teach-in/set reference codes
- Call up error messages
- Query statistical device information
- Perform a software RESET and re-initialize the code reader

**Syntax**

Online commands consist of one or two ASCII characters followed by command parameters.

No separation characters may be entered between the command and the command parameter(s). Both small and capitalized letters can be used.

Example:

| | |
|---|---|
| Command ’**CA**’: | Auto setup function |
| Parameter ’**+**’: | Activation |
| Transmitted is: | ’**CA+**’ |

**Notation**

Commands, parameters and returned data are enclosed between single quotation marks ’ ’ in the text of this manual.

Most online commands are acknowledged by the device and any requested data returned. For commands that are not acknowledged, command execution can be observed or monitored directly on the device.

### 11.1.2 General online commands

**Software version number**

| **Command** | **’V’** |
|---|---|
| Description | Requests device version information |
| Parameter | None |
| Acknowledgment | Example: **’DCR 202i FIX-F1-102-R2 V1.0.0 2016-01-01’**<br>The first line contains the device type of the code reader, followed by the device version number and version date. The data which is actually displayed may vary from the values given here. |

| NOTICE | |
|---|---|
| | You can use this command to check whether the communication between PC and code reader is functional.<br>↳ If you do not receive an acknowledgment, please check the interface connections or the protocol. |

**Software reset**

| **Command** | **'H'** |
|---|---|
| Description | Carries out a software reset. The device is restarted and reinitialized, leaving it in the same state as when the operating voltage is switched on. |
| Parameter | None |
| Acknowledgment | 'S' (start signal) |

**Auto-setup**

| **Command** | **'CA'** | | |
|---|---|---|---|
| Description | Activates the *Auto setup* function:<br>• Determine optimum illumination settings.<br>• Decode present code.<br>• Permanently store found code types and number of digits in the decoder table.<br>This is performed if a configuration code is present! | | |
| Parameter | '+' | Activates *Auto setup* | |
| Acknowledgment | 'CS=x' | | |
| | **x** | Status | |
| | | '00' | Valid **'CA'** command |
| | | '01' | Invalid command |
| | | '02' | 'Auto setup' could not be activated |

| Command | 'CA' | | |
|---|---|---|---|
| Answer | 'xx yyyy zzzzzz' | | |
| | **xx** | Code type of the read code | |
| | | '01' | 2/5 Interleaved |
| | | '02' | Code 39 |
| | | '06' | UPC (A, E) |
| | | '07' | EAN |
| | | '08' | Code 128, EAN 128 |
| | | '09' | Pharmacode |
| | | '10' | EAN Addendum |
| | | '11' | Codabar |
| | | '12' | Code 93 |
| | | '13' | GS1 DataBar Omni |
| | | '14' | GS1 DataBar Limited |
| | | '15' | GS1 DataBar Expanded |
| | | '20' | GS1 DataBar Truncated |
| | | '32' | DataMatrix ECC200 |
| | | '33' | QR code |
| | | '34' | Aztec |
| | | '48' | PDF417 |
| | | '52' | GS1 DataBar Stacked |
| | | '53' | GS1 DataBar Stacked Omni |
| | | '54' | GS1 DataBar Stacked Expanded |
| | **yyyy** | | Number of digits of the read code |
| | **zzzzzz** | | Contents of the decoded label. |

**Alignment mode**

| Command | 'JP' | |
|---|---|---|
| Description | Activates or deactivates the alignment mode for simple mounting alignment of the device.<br>After activating the function with **JP+**, the code reader constantly outputs status information on the serial and Ethernet interface.<br>With the online command, the code reader is set so that it constantly outputs the floating average value of the last 10 image acquisitions in [%] and the decoding result.<br>These values can be used to determine the reading quality or decoding quality.<br>The values are also output on the bar graph display of the device (SIGNAL QUALITY). | |
| Parameter | '+' | activates the alignment mode |
| | '-' | deactivates the alignment mode |
| Acknowledgment | 'yyy zzzzzz' | |
| | **yyy** | Reading quality in [%]. |
| | **zzzzzz** | Code information |

### Manual definition of the reference code

| Command | ’RS’ | | |
|---|---|---|---|
| Description | This command can be used to define a new reference code in the code reader by means of direct input via the serial interface or the Ethernet interface. | | |
| Parameter | ’RSyvxxzzzzzzzz’<br>**y**, **v**, **x** and **z** are placeholders (variables) for the actual input. | | |
| | y | Def. reference code no. | |
| | | ’1’ | (Code 1) |
| | v | Storage location for reference code: | |
| | | ’3’ | RAM only |
| | xx | Defined code type (see command 'CA') | |
| | z | Defined code information (1 … 244 characters) | |
| Acknowledgment | ’RS=x’ | | |
| | **x** | Status | |
| | | ’00’ | Valid **’Rx’** command |
| | | ’01’ | Invalid command |
| | | ’02’ | Insufficient memory for reference code |
| | | ’03’ | Reference code has not been saved |
| | | ’04’ | Reference code invalid |
| Example | Entry = ’RS133211032010’<br>Code 1 (1), RAM (03)+EEPROM (0), DataMatrix ECC 200 (32), code information | | |

### Teach-in

| Command | ’RT’ | | |
|---|---|---|---|
| Description | This command enables a reference code to be defined quickly by reading an example label. | | |
| Parameter | ’RTy’ | | |
| | y | Function | |
| | | ’1’ | Defines reference code 1 |
| Acknowledgment | The code reader responds with command **’RS’** and corresponding status (see command ’RS’). After a code has been read, it sends the result in the following format:<br>’**RCyvxxzzzzz**’<br>**y**, **v**, **x** and **z** are placeholders (variables) for the actual input. | | |
| | y | Def. reference code no. | |
| | | ’1’ | (Code 1) |
| | v | Storage location for reference code: | |
| | | ’3’ | RAM only |
| | xx | Defined code type (see command 'CA') | |
| | z | Defined code information (1 … 244 characters) | |

| NOTICE | |
|---|---|
| | With this function, only code types are recognized that are identified using the *Auto setup* function or which were set in the setup. |

### Reading a reference code

| Command | ’RR’ | | |
|---|---|---|---|
| Description | The command reads out the reference code defined in the code reader. If no parameters are specified, all defined codes are output. | | |
| Parameter | <reference code number> | | |
| | ’1’ | Reference code 1 | |
| Acknowledgment | Output in the following format:<br>’**RCyvxxzzzz**’<br>If no reference codes are defined, nothing is entered for **zzzz**.<br>**y**, **v**, **x** and **z** are placeholders (variables) for the actual input. | | |
| | y | Def. reference code no. | |
| | | ’1’ | (Code 1) |
| | v | Storage location for reference code: | |
| | | ’3’ | RAM only |
| | xx | ’00’ is always output | |
| | z | Defined code information (1 … 244 characters) | |

### Device status

| Command | ’SST?’ | | |
|---|---|---|---|
| Description | The command queries the device status. If the command is sent via the host interface (Ethernet, RS 232/RS 422), acknowledgment is only given in the *Process* operating mode. The host interface is blocked in the *Service* operating mode. | | |
| Parameter | None | | |
| Acknowledgment | ’SST=xxxxxxxx’<br>**x** stands for a single bit (value ’1’ or ’0’)<br>Bit 7 is at the far left, bit 0 is at the far right | | |
| | 0 | Ready for testing | |
| | | ’1’ | The code reader is ready to receive a trigger and start a check program. |
| | | ’0’ | The code reader does not respond to an incoming trigger signal. |
| | 1 | Operating mode | |
| | | ’1’ | *Process* operating mode |
| | | ’0’ | *Service* operating mode |
| | 2 | Device error | |
| | | ’1’ | Device error, no inspection possible |
| | | ’0’ | No device error, ready |
| | 3 … 7 | No function, value is always ’0’ | |
| | Alternatively, the following acknowledgment is output:<br>’DS=xx’ | | |
| | **x** | Error acknowledgment | |
| | | ’00’ | Syntax error |
| | | ’01’ | Other error |

### 11.1.3 Online commands for system control

**Activate decoding**

| Command | '+' |
|---|---|
| Description | The command activates configured decoding. |
| Parameter | None |
| Acknowledgment | None |

**Deactivate decoding**

| Command | '-' |
|---|---|
| Description | The command deactivates configured decoding. |
| Parameter | None |
| Acknowledgment | None |

## 11.2 XML-based communication

You can send commands for control and configuration directly to the code reader via XML-based communication.

- The code reader must be connected to a computer (host) via the Ethernet interface (see chapter 8.3.4 "Ethernet host communication").
- The code reader is designed as an XML server and communicates on port 10004.

You can find detailed information on XML-based communication on the Leuze home page:
**www.leuze.com**

- Enter the type designation or part number of the device as the search term.
- You can find the information on the *Downloads* tab.

# 12 Care, maintenance and disposal

Usually, the code reader does not require any maintenance by the operator.

### Cleaning

Clean the protective screen of the code reader with a soft cloth before mounting.

| | NOTICE |
|---|---|
| ! | **Do not use aggressive cleaning agents!**<br>↳ Do not use aggressive cleaning agents such as thinner or acetone for cleaning the device. |

### Maintenance

Repairs to the device must only be carried out by the manufacturer.

↳ For repairs, contact your responsible Leuze electronic subsidiary or Leuze electronic customer service (see chapter 14 "Service and support").

### Disposing

↳ For disposal observe the applicable national regulations regarding electronic components.

# 13 Diagnostics and troubleshooting

## Error signaling via LED

Tab. 13.1: Meaning of the LED indicators

| Error | Possible error cause | Measures |
|---|---|---|
| **PWR LED** | | |
| Off | • No operating voltage connected to the device<br>• Hardware error | • Check operating voltage<br>• Contact Leuze electronic customer service (see chapter 14 "Service and support") |
| Red, continuous light | Device error/parameter enable | Contact Leuze electronic customer service (see chapter 14 "Service and support") |
| Red, flashing | Warning set<br>Temporary operating fault | Query diagnostic data and carry out the resulting measures |
| **NET LED** | | |
| Off | • No operating voltage connected to the device<br>• Hardware error | • Check operating voltage<br>• Contact Leuze electronic customer service (see chapter 14 "Service and support") |
| Red, continuous light | Network error<br>No communication established to the IO controller | Check interface |
| Red, flashing | No communication<br>Parameterization or configuration failed | Check interface |
| Orange, flashing | Topology error was detected by the device. | Check interface |

ПРОМЭЛЕКТРОНИКА / sales@prom-elec.com

# 14 Service and support

**24-hour on-call service at:**

+49 (0) 7021 573 - 0

**Service hotline:**

+49 (0) 7021 573 - 123

Monday to Friday 8.00 a.m. to 5.00 p.m. (UTC+1)

**E-mail:**

service.identify@leuze.de

**Repair service and returns:**

Procedure and Internet form can be found at

www.leuze.com/repair

**Return address for repairs:**

Service center

Leuze electronic GmbH + Co. KG

In der Braike 1

D-73277 Owen / Germany

## 14.1 What to do should servicing be required?

***NOTICE***

**Please use this chapter as a master copy should servicing be required!**

↳ Enter the contact information and fax this form together with your service order to the fax number given below.

**Customer data (please complete)**

| | |
|---|---|
| Device type: | |
| Serial number: | |
| Firmware: | |
| Status of LEDs: | |
| Error description: | |
| | |
| Company: | |
| Contact person/department: | |
| Phone (direct dial): | |
| Fax: | |
| Street/No: | |
| ZIP code/City: | |
| Country: | |

**Leuze Service fax number:**

+49 7021 573 - 199

# 15 Technical data

## 15.1 General specifications

Tab. 15.1: Electrical equipment

| | |
|---|---|
| Operating voltage $U_B$ | 18 V … 30 V DC<br>PELV, Class 2 / SELV |
| Average power consumption | 8 W without load on the switching output<br>During strobed operation, a higher power can briefly be consumed. |
| Switching input<br>Switching output | • SWI1: Digital switching input 1 (default: "Trigger")<br>• SWO2: Digital switching output 2 (default: "Good Read")<br>• SWI/O3: Digital switching input/output 3 (default: switching output "No read")<br>• SWI/O4: Digital switching input/output 4 (default: switching output "Device ready")<br>18 V … 30 V DC, depending on operating voltage<br>$I_{max}$: 60 mA per switching output; 100 mA total current<br>Short-circuit proof, protected against polarity reversal |
| Process interface | RS 232/RS 422, Ethernet 10/100 Mbit/s, PROFINET-IO<br>RS 232 with adjustable data format. Default:<br>• 9600 Bd, 8 data bits, no parity, 1 stop bit<br>• <STX> <data> <CR><LF> |

Tab. 15.2: Operating and display elements

| | |
|---|---|
| Keyboard | 2 control buttons (not on devices with stainless steel housing) |
| LEDs | 1 dual LED (green/red) for power (PWR)<br>1 dual LED (green/red) for bus state (NET)<br>1 dual LED (green/yellow) for link state (LINK)<br>Bar graph display with 6 LEDs (green) for function selection and displaying the reading quality (not with devices with stainless steel housing) |

Tab. 15.3: Mechanical data

| | |
|---|---|
| Degree of protection | IP65 acc. to EN 60529<br>With screwed-on M 12 connectors or mounted caps |
| VDE protection class | III (EN 61140) |
| Connection technology | M12 connectors |
| Weight | 120 g (housing hood with plastic screen) |
| Dimensions (H x W x D) | 65.6 x 43 x 44 mm |
| Fastening | 2 M4 threaded inserts on each of the side walls, 5 mm deep<br>4 M4 threaded inserts on the rear, 3.5 mm / 5 mm deep |
| Housing | Housing: polycarbonate<br>Housing base: diecast aluminum |
| Optics cover | Polycarbonate<br>Optional: glass |

Tab. 15.4: Environmental data

| | |
|---|---|
| Ambient temp. (operation/storage) | 0 °C … +45 °C/-20 °C … +70 °C |
| Air humidity | max. 90% rel. humidity, non-condensing |
| Ambient light | Max. 2000 Lux |
| Electromagnetic compatibility | EN 61000-6-2, EN 61000-6-4 |
| Vibration | IEC 60068-2-6, test Fc |
| Continuous shock | IEC 60068-2-29, test Eb |
| Certifications | UL 60950-1<br>CAN/CSA C22.2 No. 60950-1-07<br>CSA C22.2 No. 60950-1-07 |
| Conformity | CE, FCC, UL |

## 15.2 Optical data

| | |
|---|---|
| Integrated LED illumination | Red light (visible, 616 nm)<br>Risk group 0 (exempt group)<br>Acc. to IEC 60825-1, EN 62471:2008 |
| Integrated feedback LED | Green (528 nm) |
| Beam exit | Front |
| Image sensor | Global shutter CMOS Imager |
| Number of pixels | 1280 x 960 pixels |
| Optics models | Resolution<br>• High Density (N)<br>0.127 mm (5 mil) … 0.25 mm (10 mil)<br>• Medium Density (M)<br>0.19 mm (7.5 mil) … 0.33 mm (13 mil)<br>• Low Density (F)<br>0.25 mm (10 mil) … 0.5 mm (20 mil) |
| Electronic shutter speeds | 68 µs … 5 ms (flash) |

### 15.2.1 Reading performance

| | |
|---|---|
| Reading distance | see chapter 6.1.3 "Determining the reading distance" |
| Object speed | • N-optics: Up to 4 ms at m=0.19 mm (7.5 mil)<br>• M-optics: Up to 5 ms at m=0.25 mm (10 mil)<br>• F-optics: Up to 7 ms at m=0.33 mm (13 mil) |

### 15.2.2 Code specifications

| | |
|---|---|
| Code type: 1D | Code 128 EAN 128 (GS1-128), Code 39, Code 2/5 Interleaved, EAN 8/ EAN 13, UPC A/E, Pharmacode, Codabar (Monarch), Code 93 |
| Code type: stacked codes | GS1 DataBar (Omnidirectional, Expanded, Limted, Truncated)<br>GS1 DataBar (Stacked Omnidirectional, StackedExpanded)<br>PDF417 |
| Code type: 2D | DataMatrix (ECC200), Aztec Code, GS1 Aztec Code, GS1 DataBar (ECC200) QR-Code, GS1 QR-Code |

## 15.3 Dimensioned drawings

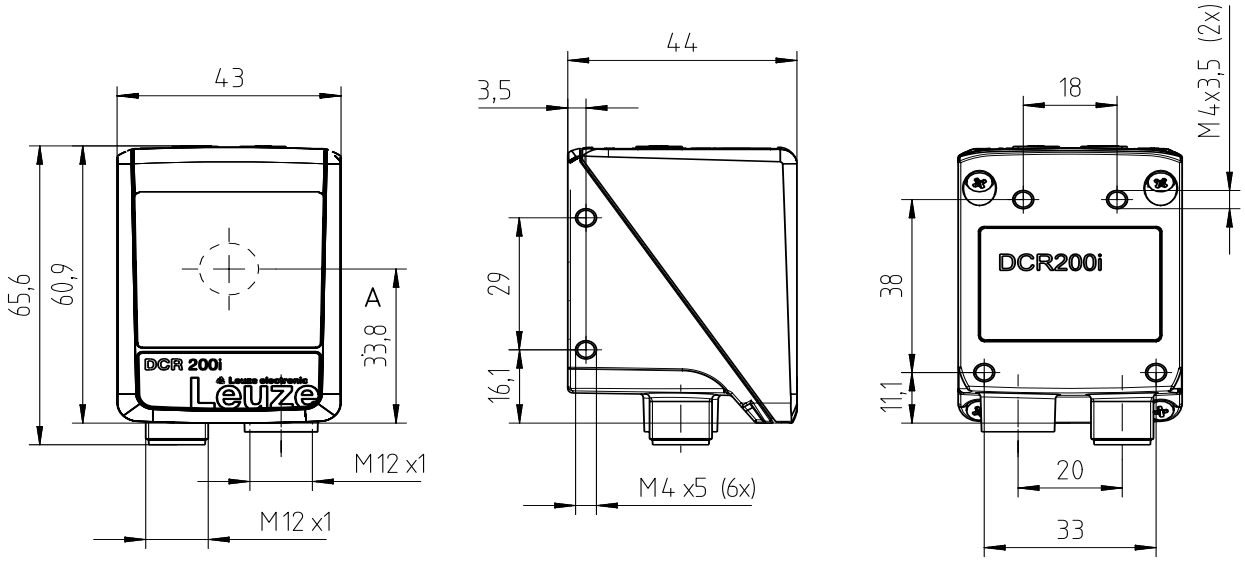


all dimensions in mm

A Optical axis

Fig. 15.1: DCR 200i dimensioned drawing

## 15.4 Dimensioned drawings - Accessories

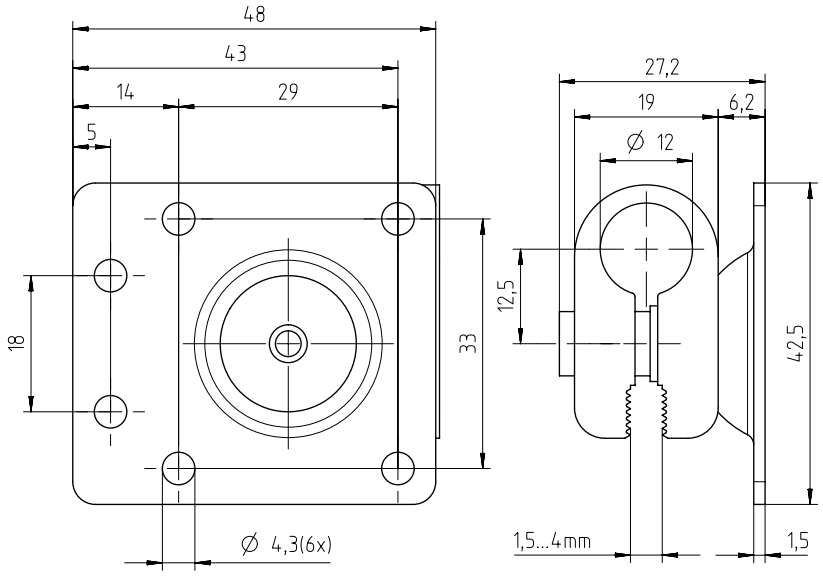


all dimensions in mm

Fig. 15.2: Dimensioned drawing of the BTU 320M-D12 mounting system

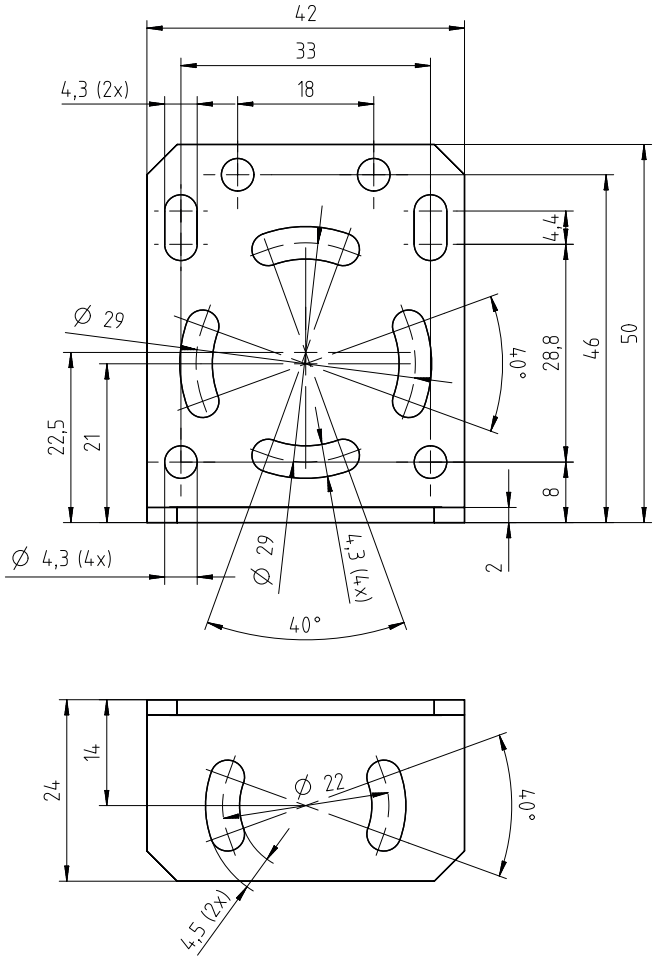


all dimensions in mm

Fig. 15.3: Dimensioned drawing of the BT 320M mounting bracket

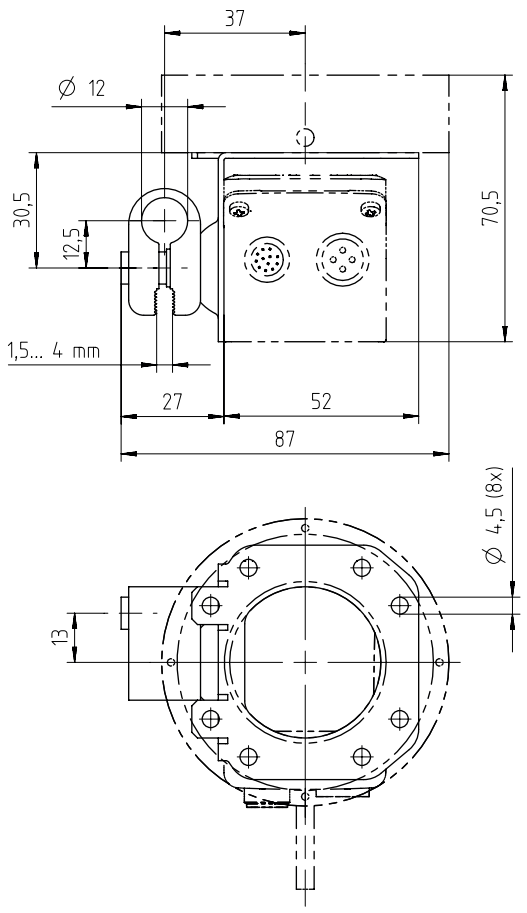


all dimensions in mm

Fig. 15.4: Dimensioned drawing of the BTU 320M-D12-RL70 mounting bracket for ring light

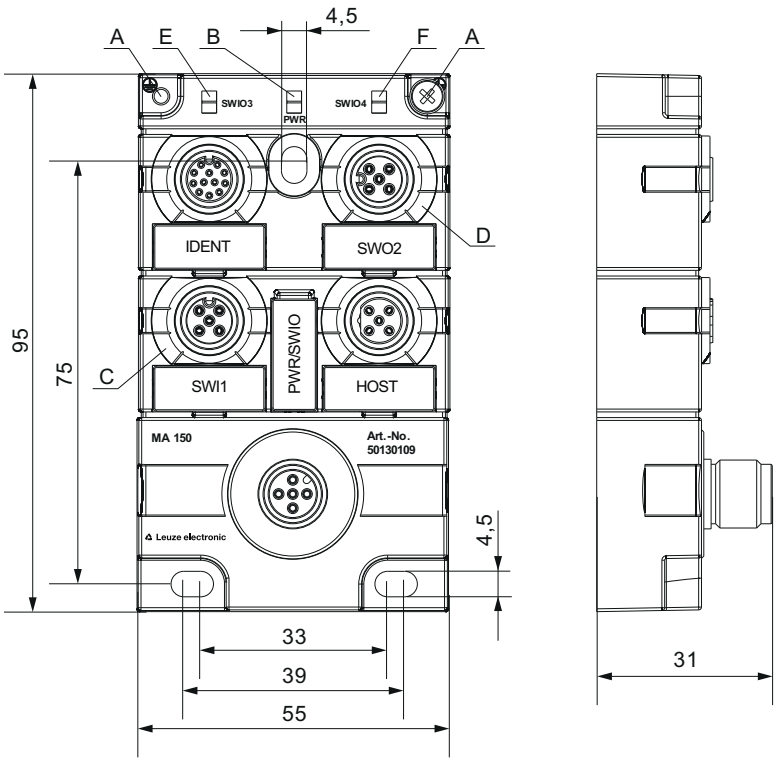


all dimensions in mm

A Earthing strap

B Green LED: PWR

C White LED: SWI1

D White LED: SWO2

E White LED: SWIO3

F White LED: SWIO4

Fig. 15.5: Dimensioned drawing of MA 150 connection unit

# 16 Order guide and accessories

## 16.1 Nomenclature

Part designation:

**DCR 2xxi FIX-f -102-Rr-Z-V**

Tab. 16.1: Part number code

| | |
|---|---|
| DCR | Operating principle: Dual Code Reader |
| 2 | Series: DCR 200 |
| xx | Host interface<br>02: Ethernet TCP/IP, UDP, RS 232/RS 422<br>48: PROFINET-IO, Ethernet TCP/IP, UDP, RS 232/RS 422 |
| i | Integrated fieldbus technology |
| FIXED | Fixed focal length |
| f | Optics model:<br>N: High Density<br>M: Medium Density<br>F: Low Density |
| 102 | Device with connector/socket<br>Beam exit at front |
| R | Illumination: red light |
| r | Resolution range:<br>3: 1280 x 960 pixels |
| Z | Type of protective screen:<br>-: Plastic<br>G: Glass<br>P: Polarization filter |
| V | Stainless steel housing |

***NOTICE***

A list with all available device types can be found on the Leuze electronic website at **www.leuze.com**.

## 16.2 Type overview

Tab. 16.2: Type overview

| Type designation | Description | Part no. |
|---|---|---|
| DCR 248i FIX-N1-102-R3 | Stationary 2D-code reader, N-optics | 50134526 |
| DCR 248i FIX-M1-102-R3 | Stationary 2D-code reader, M-optics | 50134527 |
| DCR 248i FIX-F2-102-R3 | Stationary 2D-code reader, F-optics | 50134528 |
| DCR 248i FIX-N1-102-R3-G | Stationary 2D-code reader, N-optics, glass pane | 50134529 |
| DCR 248i FIX-M1-102-R3-G | Stationary 2D-code reader, M-optics, glass pane | 50134530 |
| DCR 248i FIX-F2-102-R3-G | Stationary 2D-code reader, F-optics, glass pane | 50134531 |
| DCR 248i FIX-N1-102-R3-P | Stationary 2D-code reader, N-optics, polarization filter | 50134533 |

| Type designation | Description | Part no. |
|---|---|---|
| DCR 248i FIX-M1-102-R3-P | Stationary 2D-code reader, M-optics, polarization filter | 50134534 |
| DCR 248i FIX-F2-102-R3-P | Stationary 2D-code reader, F-optics, polarization filter | 50134535 |

## 16.3 Optical accessories

Tab. 16.3: Accessories – housing hoods

| Part no. | Part designation | Description |
|---|---|---|
| 50131462 | Cover DCR 200i | Housing hood with plastic pane |
| 50131461 | Cover DCR 200i-G | Housing hood with glass pane |
| 50131460 | Cover DCR 200i-P | Housing hood with polarization filter |
| 50131459 | Diffusor DCR 200i | Diffusor foil |

## 16.4 Cables accessories

Tab. 16.4: Accessories – PWR connection cable (open cable end)

| Part no. | Part designation | Description |
|---|---|---|
| **M12 socket (12-pin, A-coded), axial connector, open cable end, shielded, UL** | | |
| 50130281 | KD S-M12-CA-P1-020 | PWR connection cable, length 2 m |
| 50130282 | KD S-M12-CA-P1-050 | PWR connection cable, length 5 m |
| 50130283 | KD S-M12-CA-P1-100 | PWR connection cable, length 10 m |
| **M12 socket (12-pin, A-coded), angled connector, open cable end, shielded, UL** | | |
| 50134943 | KD S-M12-CW-P1-050 | PWR connection cable, length 5 m |

Tab. 16.5: Accessories – PWR connection cable (extension, to M12 plug)

| Part no. | Part designation | Description |
|---|---|---|
| **M12 socket (12-pin, A-coded), axial connector<br>M12 plug (12-pin, A-coded), shielded, UL** | | |
| 50130284 | KDS S-M12-CA-M12-CA-P1-020 | Connection cable, length 2 m |
| 50130285 | KDS S-M12-CA-M12-CA-P1-050 | Connection cable, length 5 m |
| 50130286 | KDS S-M12-CA-M12-CA-P1-100 | Connection cable, length 10 m |

Tab. 16.6: Accessories – Ethernet connection cable (to RJ-45)

| Part no. | Part designation | Description |
|---|---|---|
| **M12 plug (4-pin, D-coded), axial connector to RJ-45 connector, shielded, UL** | | |
| 50135080 | KSS ET-M12-4A-RJ45-A-P7-020 | Ethernet connection cable (on RJ-45), length 2 m |
| 50135081 | KSS ET-M12-4A-RJ45-A-P7-050 | Ethernet connection cable (on RJ-45), length 5 m |
| 50135082 | KSS ET-M12-4A-RJ45-A-P7-100 | Ethernet connection cable (on RJ-45), length 10 m |
| 50135083 | KSS ET-M12-4A-RJ45-A-P7-150 | Ethernet connection cable (on RJ-45), length 15 m |
| 50135084 | KSS ET-M12-4A-RJ45-A-P7-300 | Ethernet connection cable (on RJ-45), length 30 m |

Tab. 16.7: Accessories – Ethernet connection cable (open cable end)

| Part no. | Part designation | Description |
|---|---|---|
| **M12 plug (4-pin, D-coded), axial connector, open cable end, shielded, UL** | | |
| 50135073 | KS ET-M12-4A-P7-020 | Ethernet connection cable, length 2 m |
| 50135074 | KS ET-M12-4A-P7-050 | Ethernet connection cable, length 5 m |
| 50135075 | KS ET-M12-4A-P7-100 | Ethernet connection cable, length 10 m |
| 50135076 | KS ET-M12-4A-P7-150 | Ethernet connection cable, length 15 m |
| 50135077 | KS ET-M12-4A-P7-300 | Ethernet connection cable, length 30 m |
| **M12 plug (4-pin, D-coded), angled connector, open cable end, shielded, UL** | | |
| 50134942 | KS ET-M12-4W-P7-050 | Ethernet connection cable, length 5 m |

Tab. 16.8: Accessories – BUS IN/BUS OUT connection cable (to M12)

| Part no. | Part designation | Description |
|---|---|---|
| **M12 plug (4-pin, D-coded), BUS IN/BUS OUT to M12 socket, shielded, UL** | | |
| 50106899 | KB ET-2000-SSA | BUS OUT connection cable, length 2 m |
| 50106900 | KB ET-5000-SSA | BUS OUT connection cable, length 5 m |
| 50106901 | KB ET-10000-SSA | BUS OUT connection cable, length 10 m |
| 50106902 | KB ET-15000-SSA | BUS OUT connection cable, length 15 m |
| 50106905 | KB ET-30000-SSA | BUS OUT connection cable, length 30 m |

## 16.5 Other accessories

Tab. 16.9: Accessories – External illumination

| Part no. | Part designation | Description |
|---|---|---|
| 50132511 | RL-70/40r-003-M12 | Ring light, red with 300 mm cable and M12 plug |

Tab. 16.10: Accessories – Mounting aids

| Part no. | Part designation | Description |
|---|---|---|
| 50132150 | BTU 320M-D12 | Mounting system for 12 mm rod |
| 50132151 | BT 320M | Mounting bracket |
| 50132453 | BTU 320M-D12-RL70 | Mounting bracket for ring light |

Tab. 16.11: Accessories – fieldbus connection

| Part no. | Part designation | Description |
|---|---|---|
| 50112891 | MA 248i | Modular fieldbus connection for field use; interfaces: RS 232 / PROFINET |
| 50112892 | MA 208i | Modular fieldbus connection for field use; interfaces: RS 232 / Ethernet TCP/IP |
| 50112893 | MA 204i | Modular fieldbus connection for field use; interfaces: RS 232 / PROFIBUS |
| 50114154 | MA 235i | Modular fieldbus connection for field use; interfaces: RS 232 / CANopen |
| 50114155 | MA 238i | Modular fieldbus connection for field use; interfaces: RS 232 / EtherCAT |

| Part no. | Part designation | Description |
|---|---|---|
| 50114156 | MA 255i | Modular fieldbus connection for field use; interfaces: RS 232 / DeviceNet |
| 50114157 | MA 258i | Modular fieldbus connection for field use; interfaces: RS 232 / Ethernet/IP |
| 50132488 | KB JST-M12A-12P-50 | Interconnection cable for DCR 200i to MA 2xxi modular fieldbus connection |

Tab. 16.12: Accessories – Modular connection unit

| Part no. | Part designation | Description |
|---|---|---|
| 50130109 | MA 150 | Modular connection unit for decentralized distribution of the signals in the machine |

# 17 EC Declaration of Conformity

The code readers of the DCR 200i series have been developed and manufactured in accordance with the applicable European standards and directives.

# 18 Appendix

## 18.1 ASCII character set

| ASCII | Dec. | Hex. | Oct. | Designation | Meaning |
|---|---|---|---|---|---|
| NUL | 0 | 00 | 0 | ZERO | Zero |
| SOH | 1 | 01 | 1 | START OF HEADING | Start of heading |
| STX | 2 | 02 | 2 | START OF TEXT | Start of text characters |
| ETX | 3 | 03 | 3 | END OF TEXT | Last character of text |
| EOT | 4 | 04 | 4 | END OF TRANSMISS. | End of transmission |
| ENQ | 5 | 05 | 5 | ENQUIRY | Request for data trans. |
| ACK | 6 | 06 | 6 | ACKNOWLEDGE | Positive acknowledgment |
| BEL | 7 | 07 | 7 | BELL | Bell signal |
| BS | 8 | 08 | 10 | BACKSPACE | Backspace |
| HT | 9 | 09 | 11 | HORIZ. TABULATOR | Horizontal tabulator |
| LF | 10 | 0A | 12 | LINE FEED | Line feed |
| VT | 11 | 0B | 13 | VERT. TABULATOR | Vertical tabulator |
| FF | 12 | 0C | 14 | FORM FEED | Form feed |
| CR | 13 | 0D | 15 | CARRIAGE RETURN | Carriage return |
| SO | 14 | 0E | 16 | SHIFT OUT | Shift out |
| SI | 15 | 0F | 17 | SHIFT IN | Shift in |
| DLE | 16 | 10 | 20 | DATA LINK ESCAPE | Data link escape |
| DC1 | 17 | 11 | 21 | DEVICE CONTROL 1 | Device control character 1 |
| DC2 | 18 | 12 | 22 | DEVICE CONTROL 2 | Device control character 2 |
| DC3 | 19 | 13 | 23 | DEVICE CONTROL 3 | Device control character 3 |
| DC4 | 20 | 14 | 24 | DEVICE CONTROL 4 | Device control character 4 |
| NAK | 21 | 15 | 25 | NEG. ACKNOWLEDGE | Negative acknowledge |
| SYN | 22 | 16 | 26 | SYNCHRONOUS IDLE | Synchronization |
| ETB | 23 | 17 | 27 | EOF TRANSM. BLOCK | End of data transmission block |
| CAN | 24 | 18 | 30 | CANCEL | Invalid |
| EM | 25 | 19 | 31 | END OF MEDIUM | End of medium |
| SUB | 26 | 1A | 32 | SUBSTITUTE | Substitution |
| ESC | 27 | 1B | 33 | ESCAPE | Escape |
| FS | 28 | 1C | 34 | FILE SEPARATOR | File separator |
| GS | 29 | 1D | 35 | GROUP SEPARATOR | Group separator |
| RS | 30 | 1E | 36 | RECORD SEPARATOR | Record separator |
| US | 31 | 1F | 37 | UNIT SEPARATOR | Unit separator |
| SP | 32 | 20 | 40 | SPACE | Space |
| ! | 33 | 21 | 41 | EXCLAMATION POINT | Exclamation point |
| " | 34 | 22 | 42 | QUOTATION MARK | Quotation mark |
| # | 35 | 23 | 43 | NUMBER SIGN | Number sign |
| $ | 36 | 24 | 44 | DOLLAR SIGN | Dollar sign |
| % | 37 | 25 | 45 | PERCENT SIGN | Percent sign |

| ASCII | Dec. | Hex. | Oct. | Designation | Meaning |
|---|---|---|---|---|---|
| & | 38 | 26 | 46 | AMPERSAND | Ampersand |
| ’ | 39 | 27 | 47 | APOSTROPHE | Apostrophe |
| ( | 40 | 28 | 50 | OPEN. PARENTHESIS | Open parenthesis |
| ) | 41 | 29 | 51 | CLOS. PARENTHESIS | Closed parenthesis |
| * | 42 | 2A | 52 | ASTERISK | Asterisk |
| + | 43 | 2B | 53 | PLUS | Plus sign |
| , | 44 | 2C | 54 | COMMA | Comma |
| - | 45 | 2D | 55 | HYPHEN (MINUS) | Hyphen |
| . | 46 | 2E | 56 | PERIOD (DECIMAL) | Period (decimal) |
| / | 47 | 2F | 57 | SLANT | Slant |
| 0 | 48 | 30 | 60 | 0 | Number |
| 1 | 49 | 31 | 61 | 1 | Number |
| 2 | 50 | 32 | 62 | 2 | Number |
| 3 | 51 | 33 | 63 | 3 | Number |
| 4 | 52 | 34 | 64 | 4 | Number |
| 5 | 53 | 35 | 65 | 5 | Number |
| 6 | 54 | 36 | 66 | 6 | Number |
| 7 | 55 | 37 | 67 | 7 | Number |
| 8 | 56 | 38 | 70 | 8 | Number |
| 9 | 57 | 39 | 71 | 9 | Number |
| : | 58 | 3A | 72 | COLON | Colon |
| ; | 59 | 3B | 73 | SEMICOLON | Semicolon |
| < | 60 | 3C | 74 | LESS THAN | Less than |
| = | 61 | 3D | 75 | EQUALS | Equals |
| > | 62 | 3E | 76 | GREATER THAN | Greater than |
| ? | 63 | 3F | 77 | QUESTION MARK | Question mark |
| @ | 64 | 40 | 100 | COMMERCIAL AT | Commercial AT |
| A | 65 | 41 | 101 | A | Capital letter |
| B | 66 | 42 | 102 | B | Capital letter |
| C | 67 | 43 | 103 | C | Capital letter |
| D | 68 | 44 | 104 | D | Capital letter |
| E | 69 | 45 | 105 | E | Capital letter |
| F | 70 | 46 | 106 | F | Capital letter |
| G | 71 | 47 | 107 | G | Capital letter |
| H | 72 | 48 | 110 | H | Capital letter |
| I | 73 | 49 | 111 | I | Capital letter |
| J | 74 | 4A | 112 | J | Capital letter |
| K | 75 | 4B | 113 | K | Capital letter |
| L | 76 | 4C | 114 | L | Capital letter |
| M | 77 | 4D | 115 | M | Capital letter |

| ASCII | Dec. | Hex. | Oct. | Designation | Meaning |
|---|---|---|---|---|---|
| N | 78 | 4E | 116 | N | Capital letter |
| O | 79 | 4F | 117 | O | Capital letter |
| P | 80 | 50 | 120 | P | Capital letter |
| Q | 81 | 51 | 121 | Q | Capital letter |
| R | 82 | 52 | 122 | R | Capital letter |
| S | 83 | 53 | 123 | S | Capital letter |
| T | 84 | 54 | 124 | T | Capital letter |
| U | 85 | 55 | 125 | U | Capital letter |
| V | 86 | 56 | 126 | V | Capital letter |
| W | 87 | 57 | 127 | W | Capital letter |
| X | 88 | 58 | 130 | X | Capital letter |
| Y | 89 | 59 | 131 | Y | Capital letter |
| Z | 90 | 5A | 132 | Z | Capital letter |
| [ | 91 | 5B | 133 | OPENING BRACKET | Opening bracket |
| \ | 92 | 5C | 134 | REVERSE SLANT | Reverse slant |
| ] | 93 | 5D | 135 | CLOSING BRACKET | Closing bracket |
| ^ | 94 | 5E | 136 | CIRCUMFLEX | Circumflex |
| _ | 95 | 5F | 137 | UNDERSCORE | Underscore |
| ` | 96 | 60 | 140 | GRAVE ACCENT | Grave accent |
| a | 97 | 61 | 141 | a | Lower case letter |
| b | 98 | 62 | 142 | b | Lower case letter |
| c | 99 | 63 | 143 | c | Lower case letter |
| d | 100 | 64 | 144 | d | Lower case letter |
| e | 101 | 65 | 145 | e | Lower case letter |
| f | 102 | 66 | 146 | f | Lower case letter |
| g | 103 | 67 | 147 | g | Lower case letter |
| h | 104 | 68 | 150 | h | Lower case letter |
| i | 105 | 69 | 151 | i | Lower case letter |
| j | 106 | 6A | 152 | j | Lower case letter |
| k | 107 | 6B | 153 | k | Lower case letter |
| l | 108 | 6C | 154 | l | Lower case letter |
| m | 109 | 6D | 155 | m | Lower case letter |
| n | 110 | 6E | 156 | n | Lower case letter |
| o | 111 | 6F | 157 | o | Lower case letter |
| p | 112 | 70 | 160 | p | Lower case letter |
| q | 113 | 71 | 161 | q | Lower case letter |
| r | 114 | 72 | 162 | r | Lower case letter |
| s | 115 | 73 | 163 | s | Lower case letter |
| t | 116 | 74 | 164 | t | Lower case letter |
| u | 117 | 75 | 165 | u | Lower case letter |

| ASCII | Dec. | Hex. | Oct. | Designation | Meaning |
|---|---|---|---|---|---|
| v | 118 | 76 | 166 | v | Lower case letter |
| w | 119 | 77 | 167 | w | Lower case letter |
| x | 120 | 78 | 170 | x | Lower case letter |
| y | 121 | 79 | 171 | y | Lower case letter |
| z | 122 | 7A | 172 | z | Lower case letter |
| { | 123 | 7B | 173 | OPENING BRACE | Opening brace |
| \| | 124 | 7C | 174 | VERTICAL LINE | Vertical line |
| } | 125 | 7D | 175 | CLOSING BRACE | Closing brace |
| ~ | 126 | 7E | 176 | TILDE | Tilde |
| DEL | 127 | 7F | 177 | DELETE (RUBOUT) | Delete |

## 18.2 Code samples

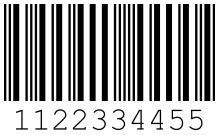


Module 0.3

Fig. 18.1: Code type: 2/5 Interleaved

Module 0.3

Fig. 18.2: Code type: Code 39

Module 0.3

Fig. 18.3: Code type: Codabar

Module 0.3

Fig. 18.4: Code type: Code 128

Module 0.3

Fig. 18.5: Code type: EAN 128

1 23456 78901 2

SC 2

Fig. 18.6: Code type: UPC-A

3456 7890

SC 3

Fig. 18.7: Code type: EAN 8

1 122334 455666 77889

SC 0 S

Fig. 18.8: Code type: EAN 13 add-on

DCR 200i

Fig. 18.9: Code type: DataMatrix ECC200

DCR 200i

Fig. 18.10: Code type: QR Code

Test symbol

Fig. 18.11: Code type: Aztec

DCR 200i series

Fig. 18.12: Code type: PDF417

## 18.3 Configuration via configuration codes

The code reader can also be configured using configuration codes. The device parameters in the device are set and permanently saved after reading this code.

Configuration changes via the configuration codes are only possible via button activation on the control panel of the device (*AUTO* function).

Proceed as follows to read in a configuration code:

- Connect the code reader to the operating voltage and activate the *AUTO* function on the control panel.
- Hold the configuration code at the correct distance in front of the optics of the code reader.

| | ***NOTICE*** |
|---|---|
| | **Read in configuration codes individually!**<br>The configuration codes can only be read in individually. |

**Reset to factory settings (without IP address)**

Fig. 18.13: Configuration code: reset to factory settings

**Setting the IP address to the Leuze default address**

Fig. 18.14: Configuration code: Setting the IP address

**DHCP activation**

Fig. 18.15: Configuration code: DHCP activation

**DHCP deactivation**

Fig. 18.16: Configuration code: DHCP deactivation

**Activation of reading gate control**

Fig. 18.17: Configuration code: Reading gate control activation

**Activation of presentation mode**

Fig. 18.18: Configuration code: Presentation mode activation

**Activation of single trigger mode**

Fig. 18.19: Configuration code: Single trigger mode activation

**Activation of burst mode**

Fig. 18.20: Configuration code: Burst mode activation

**Activation of continuous mode**

Fig. 18.21: Configuration code: Continuous mode activation

## 18.4 License terms

This product contains software components that are licensed by the copyright holders as "free software" or as "open source software" under the GNU General Public License, Version 2. We can provide you with the source code of these software components on a data carrier/download (CD-ROM or DVD) if you submit a request to our customer support within three years of distribution of the product at the following address:

Service center

Leuze electronic GmbH + Co. KG

In der Braike 1

D-73277 Owen / Germany

Source code DCR 200i

## 18.5 Communication examples

### Reading and transmitting three bar codes

Module configuration:

- Module 10 – Activation: mode=1 (with ack.)
- Module 21 – Result data 1: data length 16 bytes

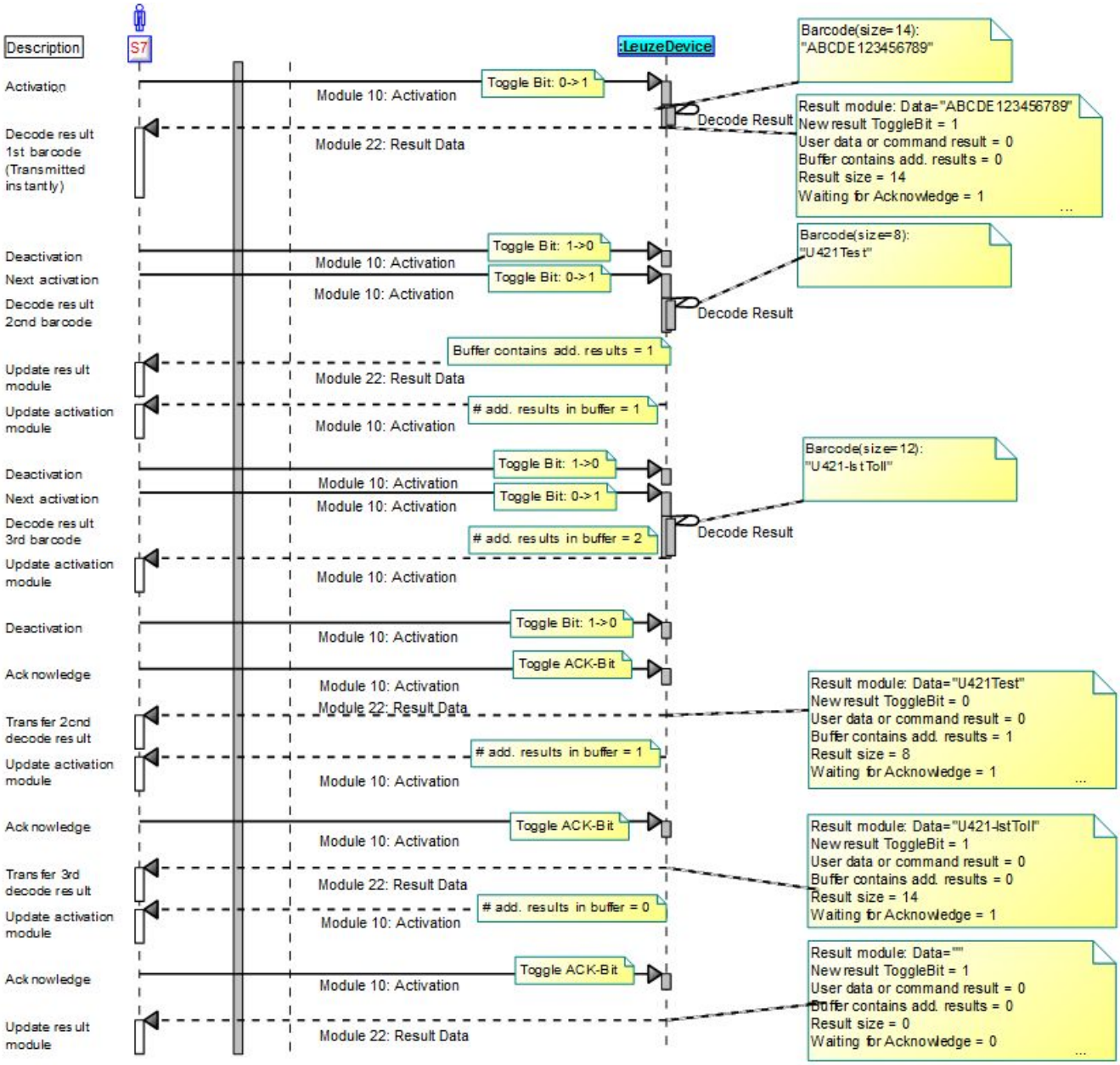


### Reading and transmitting two bar codes in fragmented mode

Module configuration:

- Module 10 – Activation: mode=1 (with ack.)
- Module 13 – Fragmented result: fragment length = 4
- Module 21 – Result data 1: data length 16 bytes

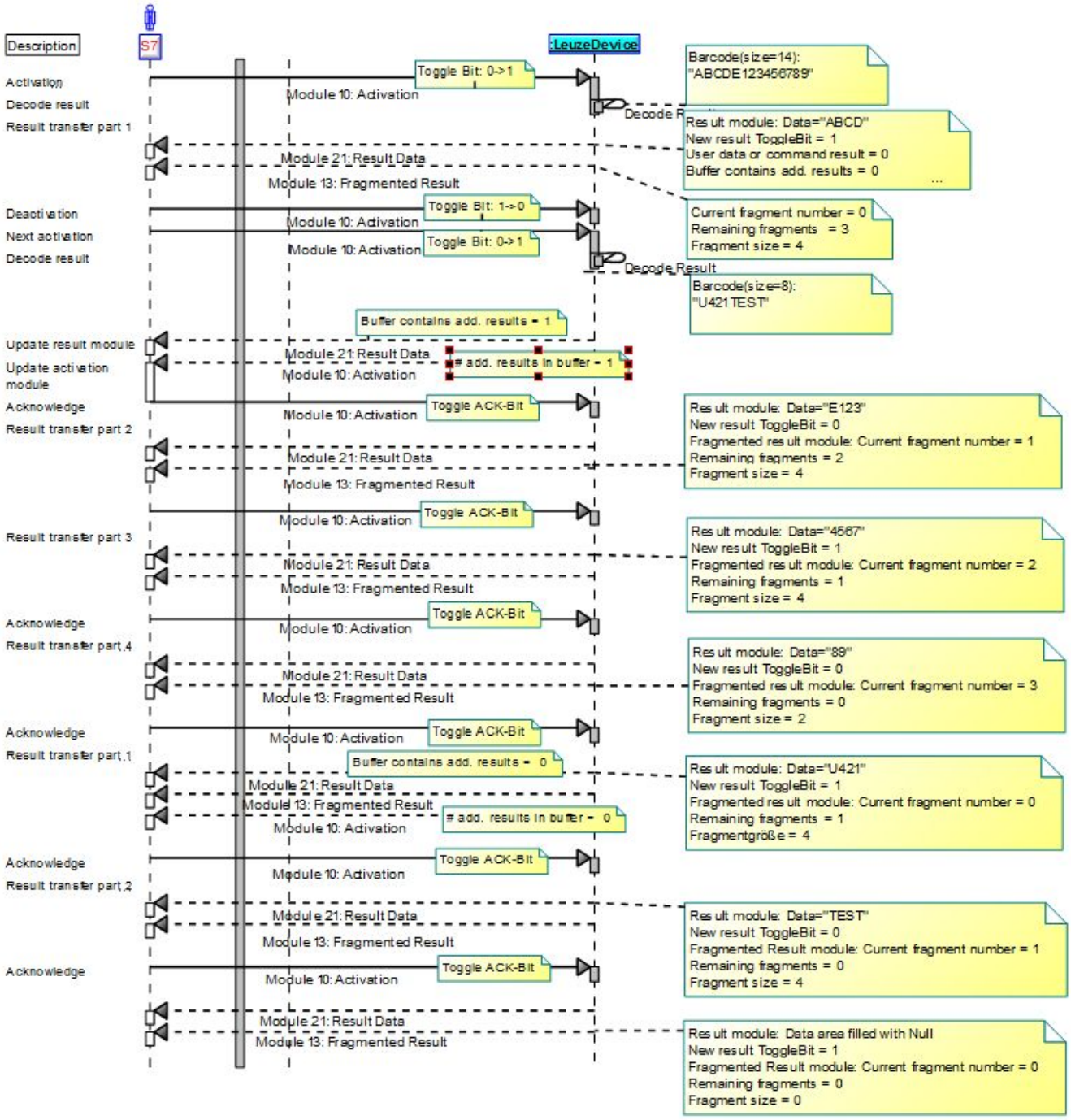
Description
S7
:LeuzeDevice
Activation
Decode result
Result transfer part 1
Toggle Bit: 0->1
Module 10: Activation
Barcode(size=14):
"ABCDE123456789"
Decode R
Module 21: Result Data
Module 13: Fragmented Result
Result module: Data="ABCD"
New result ToggleBit = 1
User data or command result = 0
Buffer contains add. results = 0
Deactivation
Next activation
Decode result
Toggle Bit: 1->0
Module 10: Activation
Toggle Bit: 0->1
Current fragment number = 0
Remaining fragments = 3
Fragment size = 4
Decode Result
Barcode(size=8):
"U421TEST"
Buffer contains add. results = 1
Update result module
Update activation module
Module 21: Result Data
# add. results in buffer = 1
Module 10: Activation
Acknowledge
Result transfer part 2
Toggle ACK-Bit
Result module: Data="E123"
New result ToggleBit = 0
Fragmented result module: Current fragment number = 1
Remaining fragments = 2
Fragment size = 4
Result transfer part 3
Result module: Data="4567"
New result ToggleBit = 1
Fragmented result module: Current fragment number = 2
Remaining fragments = 1
Fragment size = 4
Acknowledge
Result transfer part 4
Result module: Data="89"
New result ToggleBit = 0
Fragmented result module: Current fragment number = 3
Remaining fragments = 0
Fragment size = 2
Acknowledge
Result transfer part 1
Buffer contains add. results = 0
# add. results in buffer = 0
Result module: Data="U421"
New result ToggleBit = 1
Fragmented result module: Current fragment number = 0
Remaining fragments = 1
Fragmentgröße = 4
Acknowledge
Result transfer part 2
Result module: Data="TEST"
New result ToggleBit = 0
Fragmented Result module: Current fragment number = 1
Remaining fragments = 0
Fragment size = 4
Acknowledge
Result module: Data area filled with Null
New result ToggleBit = 1
Fragmented Result module: Current fragment number = 0
Remaining fragments = 0
Fragment size = 0