Leuze electronic

the sensor people

SMART
SENSOR
BUSINESS

BPS 34

Bar code positioning system - PROFIBUS DP

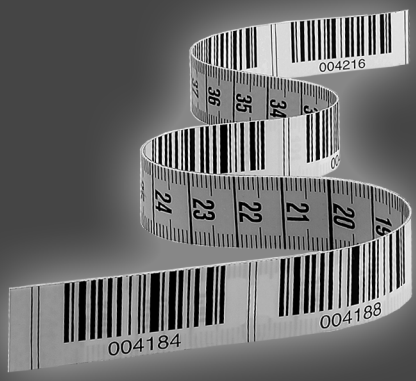

en 05-2018/11 50105437
We reserve the right to make technical changes

Original operating instructions

ПРОМЭЛЕКТРОНИКА / sales@prom-elec.com

© 2018
Leuze electronic GmbH + Co. KG
In der Braike 1
73277 Owen / Germany
Phone: +49 7021 573-0
Fax: +49 7021 573-199
http://www.leuze.com
info@leuze.com

1 General information ... 3
1.1 Explanation of symbols ... 3
1.2 Declaration of Conformity ... 3

2 Safety ... 4
2.1 Intended use ... 4
2.2 Foreseeable misuse ... 5
2.3 Competent persons ... 5
2.4 Exemption of liability ... 6
2.5 Laser safety notices ... 6

3 Fast commissioning steps at a glance ... 8

4 Technical data of BPS 34 ... 14
4.1 General specifications BPS 34 ... 14
4.2 Dimensioned drawings ... 15
4.3 Electrical connection ... 17
4.3.1 PWR IN - voltage supply and switching input/output ... 19
4.3.2 DP IN - PROFIBUS DP incoming ... 20
4.3.3 DP OUT - PROFIBUS DP outgoing ... 20
4.3.4 SW IN/OUT – Switching input/switching output ... 21
4.3.5 BPS 34 reading field curve ... 22

5 MS 34 … / MSD 1 101 connection units ... 23
5.1 MS 34 103 and MS 34 105 modular connector hoods ... 23
5.1.1 General information ... 23
5.1.2 Technical data of the connection units ... 23
5.1.3 Dimensioned drawings ... 24
5.1.4 Electrical connection ... 25
5.1.5 Description of the LED states ... 25
5.2 MSD 1 101 modular service display ... 26
5.2.1 General information ... 26
5.2.2 Dimensioned drawing ... 27
5.2.3 Electrical connection ... 27

6 Bar code tape ... 28
6.1 General information ... 28
6.2 Technical data of the bar code tape ... 29
6.3 Mounting the bar code tape ... 30
6.4 Control bar codes ... 33
6.4.1 Controllable functions ... 34
6.5 Repair kit ... 36

7 Mounting ... 38
7.1 Mounting the BPS 34 ... 38
7.2 Device arrangement ... 41
7.3 Mounting the bar code tape ... 42

8 Device parameters and interfaces ... 43
8.1 PROFIBUS ... 43
8.1.1 General information ... 43
8.1.2 Electrical connection ... 43
8.1.3 PROFIBUS address ... 46
8.1.4 General information on the GSD file ... 46
8.1.5 Structure of the GSD modules ... 47
8.1.6 Overview of the GSD modules ... 48
8.1.7 Detailed description of the modules ... 51

9 Diagnostics and troubleshooting ... 93
9.1 General causes of errors ... 93
9.2 Error on the PROFIBUS ... 93

10 Type overview and accessories ... 95
10.1 Type overview: BPS 34 ... 95
10.2 Accessories - Modular connector hoods ... 95
10.3 Accessories - Modular service display ... 95
10.4 Accessories - Termination ... 95
10.5 Accessories – Connectors ... 95
10.6 Accessories – Mounting device ... 95
10.7 Accessories - Ready-made cables for voltage supply ... 96
10.7.1 Contact assignment of PWR IN connection cable ... 96
10.7.2 Technical data of voltage supply cable ... 96
10.7.3 Order codes for voltage supply cables ... 96
10.8 Accessories - Ready-made cables for PROFIBUS connection ... 97
10.8.1 General ... 97
10.8.2 Contact assignment for PROFIBUS connection cable KB PB… ... 97
10.8.3 Technical data of PROFIBUS connection cable ... 98
10.8.4 Order codes for PROFIBUS connection cables ... 98
10.9 Type overview: Bar code tape ... 98

11 Maintenance ... 100
11.1 General maintenance information ... 100
11.2 Repairs, servicing ... 100
11.3 Disassembling, packing, disposing ... 100

12 Appendix ... 101
12.1 EC Declaration of Conformity ... 101

1 General information

1.1 Explanation of symbols

The symbols used in this technical description are explained below.

Attention!

This symbol precedes text messages which must strictly be observed. Failure to observe the provided instructions could lead to personal injury or damage to equipment.

Attention Laser!

This symbol warns of possible danger through hazardous laser radiation.

Note!

This symbol indicates text passages containing important information.

1.2 Declaration of Conformity

The bar code positioning system BPS 34, the modular connector hood MS 34 103/ MS 34 105, and the optional modular service display MSD 1 101 have been developed and manufactured in accordance with the applicable European standards and directives.

The devices of the BPS 34 series **without integrated heating** also fulfill the cUL requirements (Underwriters Laboratory Inc.) for the USA and Canada.

Note!

A copy of all declarations of conformity available for the product can be found in the appendix of this handbook (see chapter 12.1 "EC Declaration of Conformity" on Page 101).

The manufacturer of the product, Leuze electronic GmbH + Co. KG in D-73277 Owen, possesses a certified quality assurance system in accordance with ISO 9001.

2 Safety

The bar code positioning systems of the BPS 34 series and the MS 34 10x modular connector hoods have been developed, produced and tested subject to the applicable safety standards. They correspond to the state of the art.

2.1 Intended use

Bar code positioning systems of the BPS 34 series are optical measuring systems which use visible red laser light to determine the position of the BPS relative to a permanently mounted bar code tape.

The modular connector hoods MS 34 103/MS 34 105 are intended for the easy connection of bar code positioning systems of type BPS 34 in a PROFIBUS system.

The modular service display MSD 1 101, which is optionally available, displays operational data of the BPS 34 and is used as a simple means of access to the service interface of the MS 34 105.

Areas of application

The BPS 34 bar code positioning systems are designed for the following areas of application:

- High-bay storage devices: Positioning in the travel and lifting axes
- Crane bridges and trolleys
- Side-tracking skates
- Telpher lines
- Elevators

CAUTION

Observe intended use!

- Only operate the device in accordance with its intended use. The protection of personnel and the device cannot be guaranteed if the device is operated in a manner not complying with its intended use.
  Leuze electronic GmbH + Co. KG is not liable for damages caused by improper use.
- Read the technical description before commissioning the device. Knowledge of this technical description is an element of proper use.

NOTE

Comply with conditions and regulations!

- Observe the locally applicable legal regulations and the rules of the employer's liability insurance association.

Attention

For UL applications, use is only permitted in Class 2 circuits in accordance with the NEC (National Electric Code).

2.2 Foreseeable misuse

Any use other than that defined under "Intended use" or which goes beyond that use is considered improper use.

In particular, use of the device is not permitted in the following cases:

- in rooms with explosive atmospheres
- as stand-alone safety component in accordance with the machinery directive [1)]
- for medical purposes

NOTE
Do not modify or otherwise interfere with the device!
✎ Do not carry out modifications or otherwise interfere with the device. The device must not be tampered with and must not be changed in any way. The device must not be opened. There are no user-serviceable parts inside. Repairs must only be performed by Leuze electronic GmbH + Co. KG.

2.3 Competent persons

Connection, mounting, commissioning and adjustment of the device must only be carried out by competent persons.

Prerequisites for competent persons:

- They have a suitable technical education.
- They are familiar with the rules and regulations for occupational safety and safety at work.
- They are familiar with the technical description of the device.
- They have been instructed by the responsible person on the mounting and operation of the device.

Certified electricians

Electrical work must be carried out by a certified electrician.

Due to their technical training, knowledge and experience as well as their familiarity with relevant standards and regulations, certified electricians are able to perform work on electrical systems and independently detect possible dangers.

In Germany, certified electricians must fulfill the requirements of accident-prevention regulations BGV A3 (e.g. electrician foreman). In other countries, there are respective regulations that must be observed.

1) Use as safety-related component within the safety function is possible, if the component combination is designed correspondingly by the machine manufacturer.

2.4 Exemption of liability

Leuze electronic GmbH + Co. KG is not liable in the following cases:

- The device is not being used properly.
- Reasonably foreseeable misuse is not taken into account.
- Mounting and electrical connection are not properly performed.
- Changes (e.g., constructional) are made to the device.

2.5 Laser safety notices

ATTENTION, LASER RADIATION – LASER CLASS 2

Never look directly into the beam!

The device satisfies the requirements of IEC 60825-1:2007 (EN 60825-1:2007) safety regulations for a product of **laser class 2** as well as the U.S. 21 CFR 1040.10 regulations with deviations corresponding to "Laser Notice No. 50" from June 24, 2007.

- Never look directly into the laser beam or in the direction of reflected laser beams!
  If you look into the beam path over a longer time period, there is a risk of injury to the retina.
- Do not point the laser beam of the device at persons!
- Interrupt the laser beam using a non-transparent, non-reflective object if the laser beam is accidentally directed towards a person.
- When mounting and aligning the device, avoid reflections of the laser beam off reflective surfaces!
- CAUTION! The use of operating or adjusting devices other than those specified here or carrying out of differing procedures may lead to dangerous exposure to radiation.
- Observe the applicable statutory and local laser protection regulations.
- The device must not be tampered with and must not be changed in any way.
  There are no user-serviceable parts inside the device.
  Repairs must only be performed by Leuze electronic GmbH + Co. KG.

NOTE
Affix laser information and warning signs! Laser information and warning signs are attached to the device (see Figure 2.1):

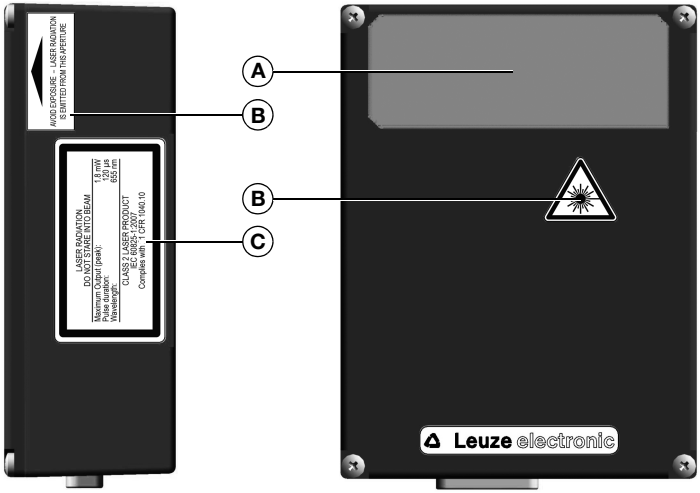

A Laser aperture
B Laser warning sign
C Laser information sign with laser parameters

Figure 2.1:Laser apertures, laser warning and information signs

3 Fast commissioning steps at a glance

Note!

*Below you will find a **short description for the initial commissioning** of the bar code positioning system BPS 34. Detailed explanations of all listed points can be found throughout the handbook.*

Description of the BPS 34 functions

The BPS 34 uses visible red laser light to determine its position relative to the bar code tape. This essentially takes place in three steps:

1. Reading a code on the bar code tape
2. Determining the position of the read code in the scanning area of the scanning beam
3. Calculating the position to within a millimeter using the code information and the code position relative to the device's center.

The position value is then output via the interface.

1 Mechanical design

Mounting the bar code tape

The bar code tape is to be affixed without tension to a dust- and grease-free mounting surface.

→ Chapter 6.3 **on Page 30**

Mounting the BPS 34 device

There are 2 different types of mounting arrangements for the BPS 34:

1. Using 4 M4x6 screws on the rear of the device.
2. Using a mounting device (BT 56) on the dovetail fastening grooves.

Note!

The installation dimensions listed in the following figure must absolutely be adhered to. Optically, it must be ensured that the scanner has an unobstructed view of the bar code tape at all times. ➔ Chapter 7.2 **on Page 41**

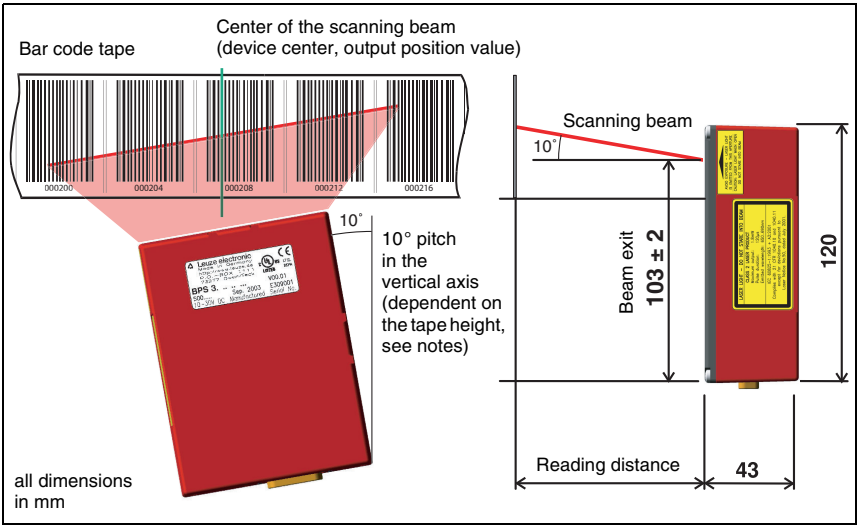

Figure 3.1:Beam exit and device arrangement of the BPS 34

➔ Chapter 7.1 **on Page 38**

Note!

During mounting, the following angles of inclination must be taken into account in the vertical axis:
10° for a tape height of 47mm,
7° for a tape height of 30mm and
5° for a tape height of 25mm;
the working range of the reading field curve must also be taken into account.

Attention!

For the position calculation, the scanning beam of the BPS 34 must be incident on the bar code tape without interruption. Ensure that the scanning beam is always incident on the bar code tape when the system is moving.

② Connecting the voltage supply and PROFIBUS

The BPS 34, in combination with an MS 34 103 or MS 34 105, is connected via M12 connectors.

Connecting the voltage supply

The voltage supply is connected via the **PWR IN** M12 connection.

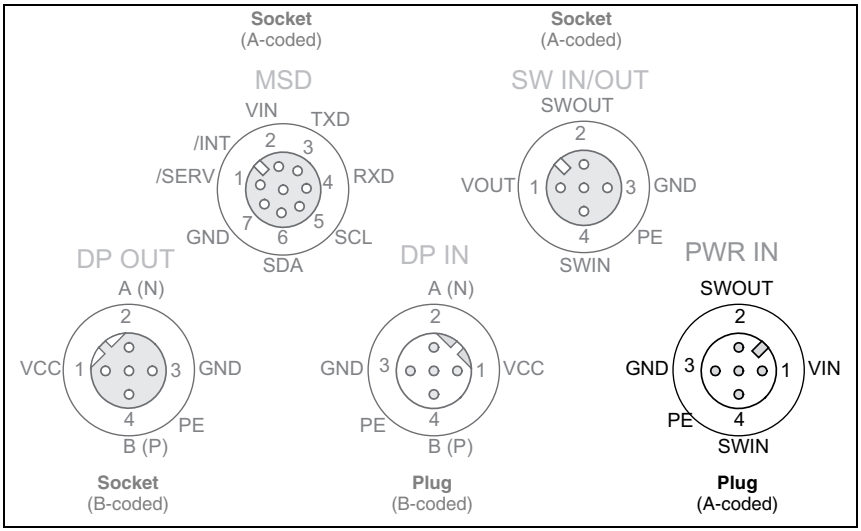

Figure 3.2:BPS 34 with MS 34 103/MS 34 105 – PWR IN connection

Connecting the PROFIBUS

The PROFIBUS is connected via **DP IN** or, in the case of a continuing network, via **DP OUT**. If **DP OUT** is not used, the PROFIBUS must be terminated at this point with an M12 terminator plug (see chapter 10.4 "Accessories - Termination").

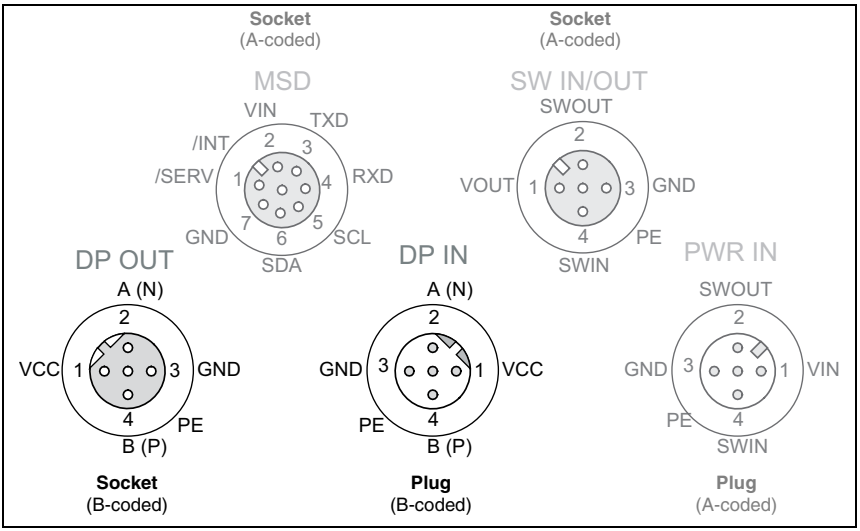

Figure 3.3:BPS 34 with MS 34 103/MS 34 105 – DP IN and DP OUT connections

Setting the PROFIBUS address

The PROFIBUS address must be set in the MS 34 10x connector plug hood. The correct address setting on the PROFIBUS network is indicated by the green LED on the MS 34 10x.

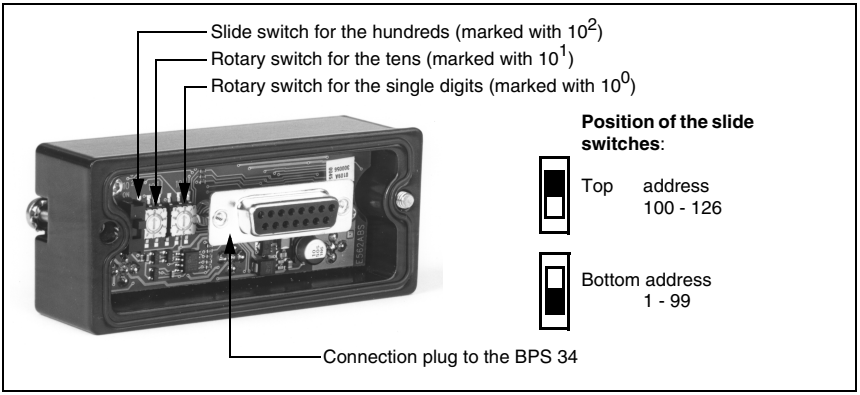

Figure 3.4:View of the inside of the MS 34

PROFIBUS manager

Install the GSD file associated with the BPS 34… in the PROFIBUS manager of your control. Activate the desired modules (at least module 1 - position value).

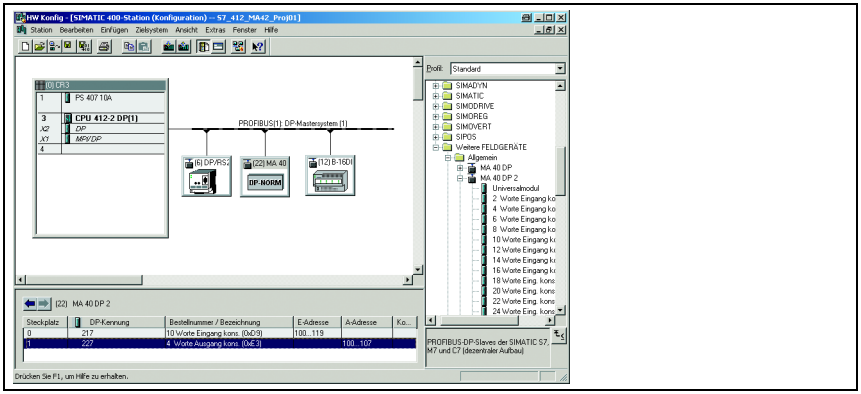

Figure 3.5:Example PROFIBUS manager

Store the slave address for the BPS 34 in the PROFIBUS manager. Ensure that the address is the same as the address configured in the device.

③ Connecting the switching input/switching output to the BPS 34

The switching input/switching output is connected via SW IN/OUT.

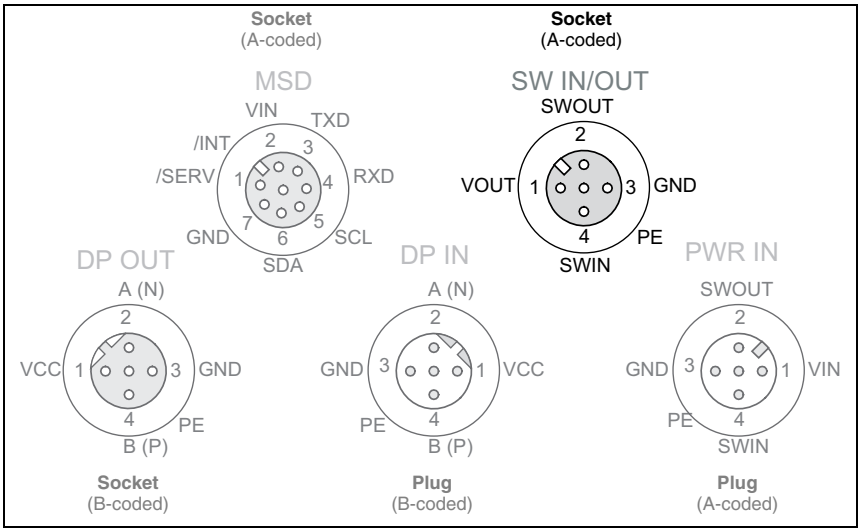

Figure 3.6:BPS 34 with MS 34 103/MS 34 105 – SW IN/OUT connection

4 Connecting the MSD 1 101 modular service display

The MSD 1 101 is connected via cable KB 034-2000 (M12 connection on MSD and M12 connection on MSD 1 101, see chapter 10.3 "Accessories - Modular service display" on Page 95).

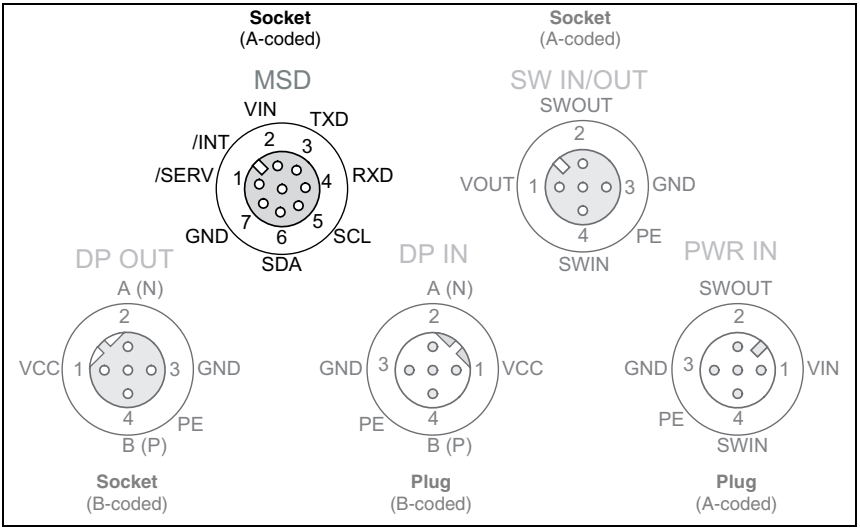

Figure 3.7:BPS 34 with MS 34 103/MS 34 105 - MSD connection

The BPS 34 can be accessed via the MS 1 101 using the service interface.

Note!

Changes which were made via the service interface on the BPS 34 are lost following initialization on the PROFIBUS.

4 Technical data of BPS 34

4.1 General specifications BPS 34

Optical data	
Light source	Laser diode
Beam deflection	Via rotating polygon wheel
Reading distance	See reading field (Figure 4.3.5)
Optical window	Glass with scratch-resistant indium coating
Laser class	2 acc. to IEC 60825-1:2007
Wavelength	655 nm
Max. output power (peak)	1.8 mW
Impulse duration	120 µs
Measurement data	
Reproducibility (3 sigma)	-1 mm
Response time	16 ms (configurable)
Output time	2 ms
Basis for contouring error calculation	7 ms
Working range	90 … 170 mm
Max. traverse rate	10 m/s
Electrical data	
Interface type	PROFIBUS DP, up to 12 MBd
Service interface	RS 232 with default data format, 9600 Bd, 8 data bits, no parity, 1 stop bit
Switching input / switching output	1 switching input, 1 switching output, each is programmable
Green LED	Device ready (power on) and bus O.K.
Operating voltage	Without optics heating: 10 … 30 VDC With optics heating: 22 … 26 VDC [1)]
Power consumption	Without optics heating: 5 W With optics heating: max. 30 W
Mechanical data	
Degree of protection	IP 65 [2)]
Weight	Without optics heating: 400 g With optics heating: 480 g
Dimensions (H x W x D)	Without optics heating: 120 x 90 x 43 mm With optics heating: 120 x 90 x 52 mm
Housing	Diecast aluminum
Environmental data	
Operating temperature range	Without optics heating: 0 °C … +40 °C With optics heating: -30 °C … +40 °C High temperature version: 0 °C … +50 °C
Storage temperature range	-30 °C … +60 °C
Air humidity	Max. 90 % rel. humidity, non-condensing

Vibration	IEC 60068-2-6, test Fc
Shock	IEC 60068-2-27, test Ea
Continuous shock	IEC 60068-2-29, test Eb
Electromagnetic compatibility	EN 55022, EN 55024, EN 61000-4-2, -3, -4 and -6, EN 61000-6-2 and -3 [1)]
Bar code tape	
Max. length (measurement length)	10000 m
Ambient temperature	-40 °C … -120 °C
Mech. properties	Scratch and wipe resistant, UV resistant, moisture resistant, partly chemical resistant

1) To ensure consistent heat emission
2) With MS 34 10x plugged in and M12 connectors/caps screwed into place

Table 4.1: General specifications

Note!

The warm-up time before devices with integrated heating are ready for operation is approx. 30 min. (depending on the environmental conditions).

For devices with integrated heating (…H models), window heating is in constant operation. Regulation of device-internal heating is temperature dependent.

4.2 Dimensioned drawings

BPS 34 SM 100 / BPS 34 SM 100 H / BPS 34 SM 100 HT

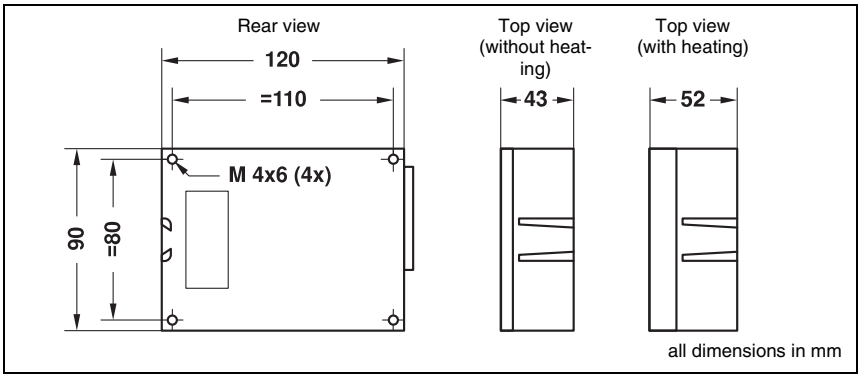

Figure 4.1:BPS 34 dimensioned drawing

MS 34 103 / MS 34 105

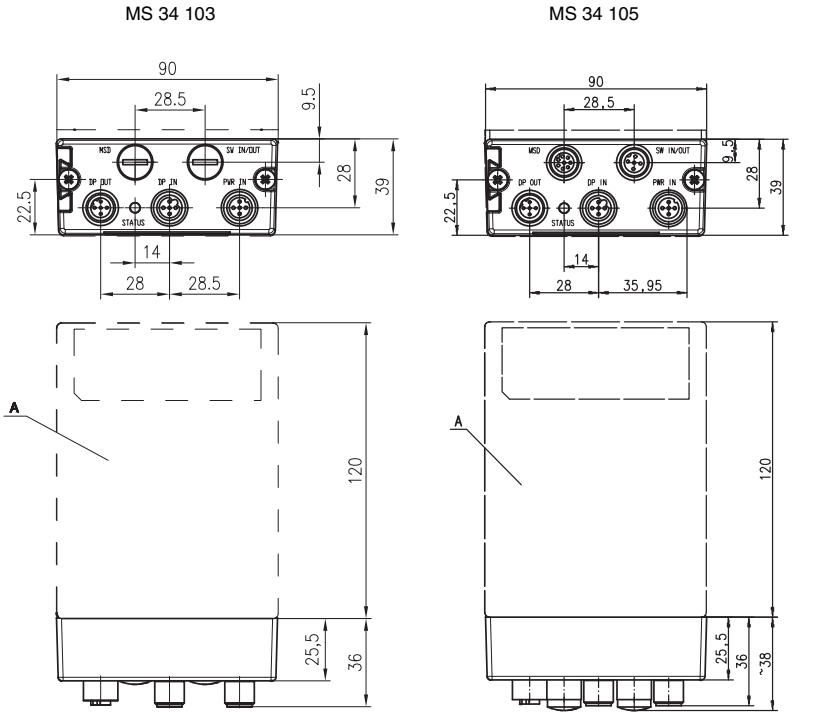

A = BPS 34

all dimensions in mm

Note!

The MSD and SW IN/OUT connections are sealed with caps upon delivery.

Figure 4.2:Dimensioned drawing MS 34 103 / MS 34 105

4.3 Electrical connection

The BPS 34 can be connected via the MS 34 103/MS 34 105 using M12 connectors. For the locations of the individual device connections, please refer to the device detail shown in Figure 4.3.

The corresponding mating connectors and ready-made cables are available as accessories for all connections. For additional information, refer to Chapter 10 starting on Page 95.

Attention!

Connection of the device and cleaning must only be carried out by a qualified electrician.

If faults cannot be cleared, the device should be switched off and protected against accidental use.

Before connecting the device, be sure that the supply voltage agrees with the value printed on the name plate.

The power supply unit for the generation of the supply voltage for the BPS 34 and the respective connection units must have a secure electrical insulation through double insulation and safety transformers according to EN 60742 (corresponds to IEC 60742).

Be sure that the protective conductor is connected correctly. Fault-free operation is only guaranteed when the device is properly earthed.

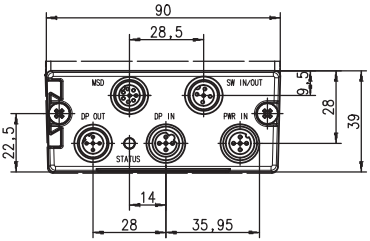

all dimensions in mm

PWR IN = voltage supply
DP IN = PROFIBUS IN
DP OUT = PROFIBUS OUT
MSD = modular service display (MS 34 105 only)
SW IN/OUT = switching input/output (MS 34 105 only)

Note!
The MSD and SW IN/OUT connections are sealed with caps upon delivery.

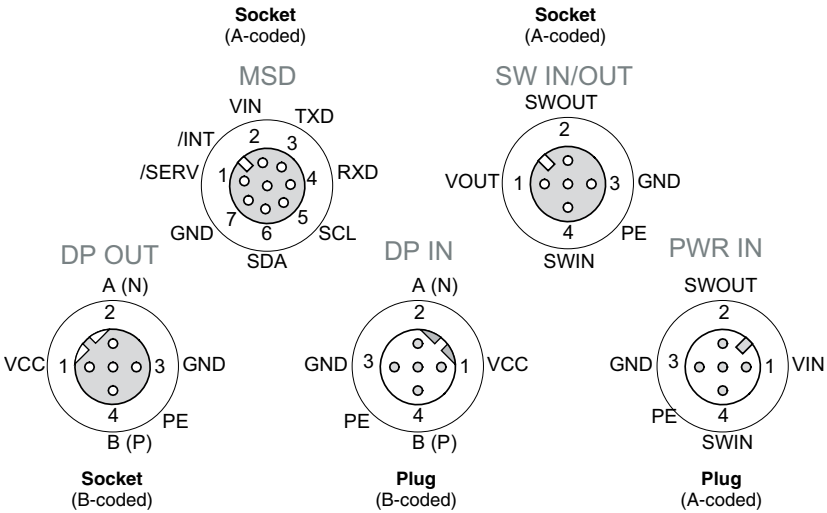

Figure 4.3:Pin assignment of the BPS 34 with MS 34 103 / MS 34 105

Attention!
Degree of protection IP 65 is achieved only if the connectors and caps are screwed into place!

4.3.1 PWR IN - voltage supply and switching input/output

Attention!

For devices with integrated heating, the supply voltage must be wired with a minimum 0.5mm² (recommended 0.75mm²) core cross section. It is not possible to loop the supply voltage through to other loads!

Note!

Cables with a wire cross section of 0.5mm² or 0.75mm² are not available as ready-made cables from Leuze electronic.

PWR IN (5-pin plug, A-coded)			
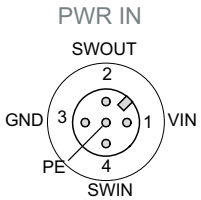 **M12 plug (A-coded)**	**Pin**	**Name**	**Comment**
	1	VIN	Positive supply voltage Without optics heating: +10 … +30VDC With optics heating: +22 … +26VDC
	2	SWOUT	Switching output
	3	GND	Negative supply voltage 0VDC
	4	SWIN	Switching input
	5	PE	Functional earth
	Thread	PE	Functional earth (housing)

Figure 4.4:Pin assignment - PWR IN

Connecting the functional earth PE

BPS 34 with MS 34 103/MS 34 105 connector hood:

↳ Connect **PE** to **PIN 5 of the M12 connector PWR IN** for voltage supply!

Note!

Programming of the switching input/switching output is performed via module 7 (Switching input) and module 8 (Switching output). For further information, see also Chapter 8.1.7.7, Page 60 et seq.

Note!

*The switching input/switching output of the **PWR IN** plug connection is identical to the **SWIN** switching input and **SWOUT** switching output of the **SW IN/OUT** plug connection on the MS 34 105.*

Attention!

Degree of protection IP 65 is achieved only if the connectors and caps are screwed into place!

4.3.2 DP IN - PROFIBUS DP incoming

DP IN (5-pin plug, B-coded)			
DP IN 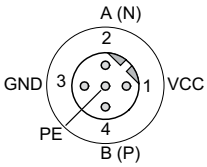 **M12 plug (B-coded)**	**Pin**	**Name**	**Comment**
	1	**VCC**	5 V DC for bus termination
	2	**A (N)**	Receive/transmit data A-line (N)
	3	**GND**	Functional earth for bus termination
	4	**B (P)**	Receive/transmit data B-line (P)
	5	**PE**	Functional earth
	Thread	**PE**	Functional earth (housing)

Figure 4.5:Pin assignment - DP IN

Attention!

Degree of protection IP 65 is achieved only if the connectors and caps are screwed into place!

4.3.3 DP OUT - PROFIBUS DP outgoing

DPOUT (5-pin socket, B-coded)			
DP OUT 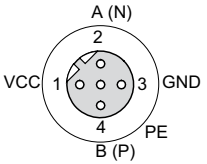 **M12 socket (B-coded)**	**Pin**	**Name**	**Comment**
	1	**VCC**	5 V DC for bus termination
	2	**A (N)**	Receive/transmit data A-line (N)
	3	**GND**	Functional earth for bus termination
	4	**B (P)**	Receive/transmit data B-line (P)
	5	**PE**	Functional earth
	Thread	**PE**	Functional earth (housing)

Figure 4.6:Pin assignment - DP IN

Attention!

Degree of protection IP 65 is achieved only if the connectors and caps are screwed into place!

Note!

If the PROFIBUS is not connected to another participant via the MS 34 10x, the DP OUT connection must be fitted with a TS 02-4-SA terminator plug for the purpose of bus termination. For further information, see also Chapter 10.4 on Page 95.

4.3.4 SW IN/OUT – Switching input/switching output

SW IN/OUT (5-pin socket, A-coded)			
	Pin	**Name**	**Comment**
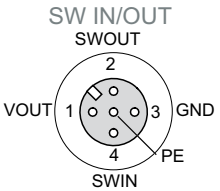 **M12 socket (A-coded)**	1	VOUT	Supply voltage for sensor system (VOUT identical to VIN at PWR IN) Without optics heating: +10 … +30 VDC With optics heating: +22 … +26 VDC
	2	SWOUT	Switching output
	3	GND	Supply voltage for sensors 0 VDC
	4	SWIN	Switching input
	5	PE	Functional earth
	Thread	PE	Functional earth (housing)

Figure 4.7:Pin assignment - SW IN/OUT

Attention!

Degree of protection IP 65 is achieved only if the connectors and caps are screwed into place!

Note!

Programming of the switching input/switching output is performed via module 7 (Switching input) and module 8 (Switching output). For further information, see also Chapter 8.1.7.7, Page 60 et seq.

Note!

*The switching input/switching output of the **PWR IN** plug connection is identical to the **SWIN** switching input and **SWOUT** switching output of the **SW IN/OUT** plug connection on the MS 34 105.*

Attention!

If you use a sensor with a standard M 12 connector, please note the following:

Only use sensors on which the switching output does not lie on pin 2, i.e. only sensor cables on which pin 2 is not assigned. Otherwise, the switching output is not protected against feedback on the switching input. If the inverted sensor output lies on pin 2, for example, erroneous behavior of the switching output will result!

Connecting the switching input / switching output

The BPS 34 is provided with a switching input and a switching output. The connection is performed as shown in Figure 4.8:

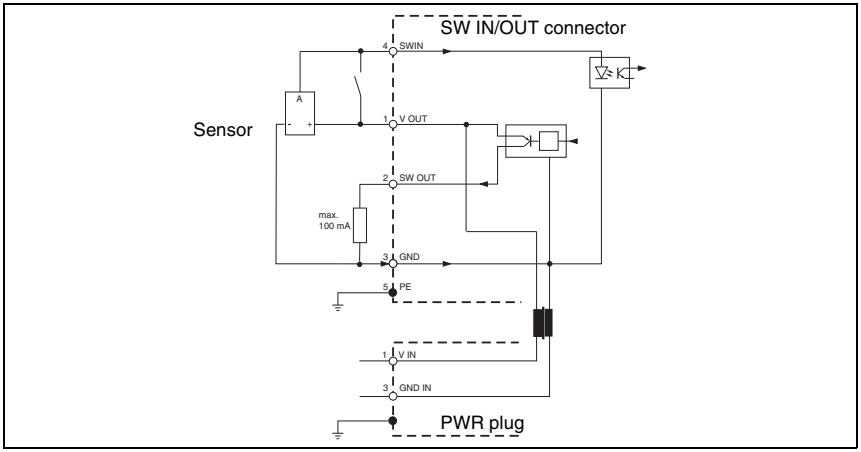

Figure 4.8:Connecting the switching input / switching output of the BPS 34

4.3.5 BPS 34 reading field curve

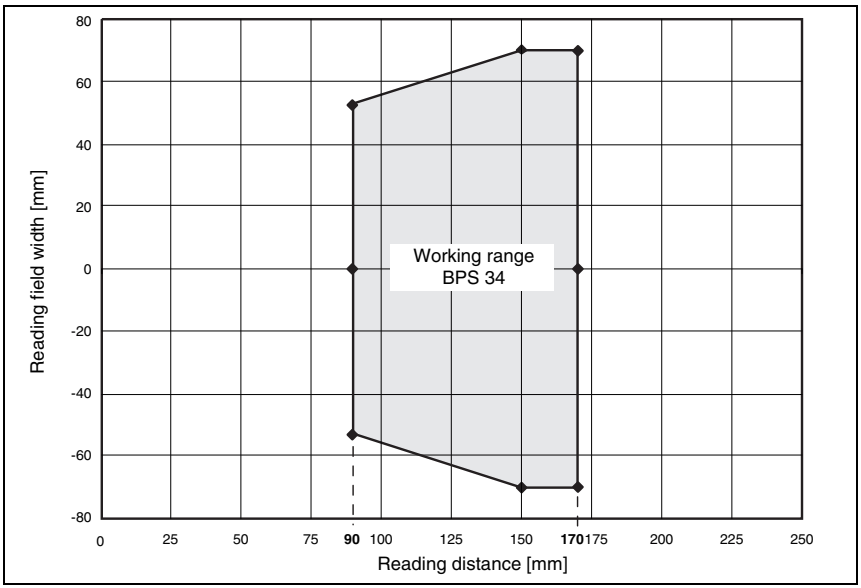

Figure 4.9:BPS 34 reading field curve

5 MS 34 … / MSD 1 101 connection units

5.1 MS 34 103 and MS 34 105 modular connector hoods

A modular connector hood of type MS 34 103 or MS 34 105 is part of every BPS 34. The two connector hoods are used to connect the BPS 34 to the PROFIBUS. For this, they feature one **DP IN** and one **DP OUT** connection each, as well as switches for address setting.

If only the connection to the PROFIBUS is intended, type MS 34 103 is sufficient.

If, in addition, a switching input/output or modular service display are to be connected, an MS 34 105 is required. Although switching input and output are available on the PWR IN voltage supply connector, the switching input of the MS 34 105 has the advantage that a standard sensor connector can be used.

5.1.1 General information

The modular connector hoods with integrated connectors are necessary accessories for connecting a BPS 34 in a PROFIBUS system. On the MS 34 10x, the PROFIBUS is connected, the PROFIBUS address set and the BPS 34 supplied with voltage.

MS 34 103

The MS 34 103 offers the following interfaces:

- PROFIBUS incoming **DP IN**
- PROFIBUS outgoing **DP OUT**
- Voltage supply **PWR IN** with switching input and switching output

MS 34 105

In addition to the MS 34 103, the MS 34 105 offers the following interfaces:

- For the **MSD** modular service display
- M12 connection for switching input and switching output **SW IN/OUT**

5.1.2 Technical data of the connection units

Mechanical data	
Degree of protection	IP 65 [1)]
Weight	160 g
Dimensions (H x W x D)	38 x 90 x 39 mm
Housing	Diecast zinc

1) With M12 connectors/caps screwed into place

5.1.3 Dimensioned drawings

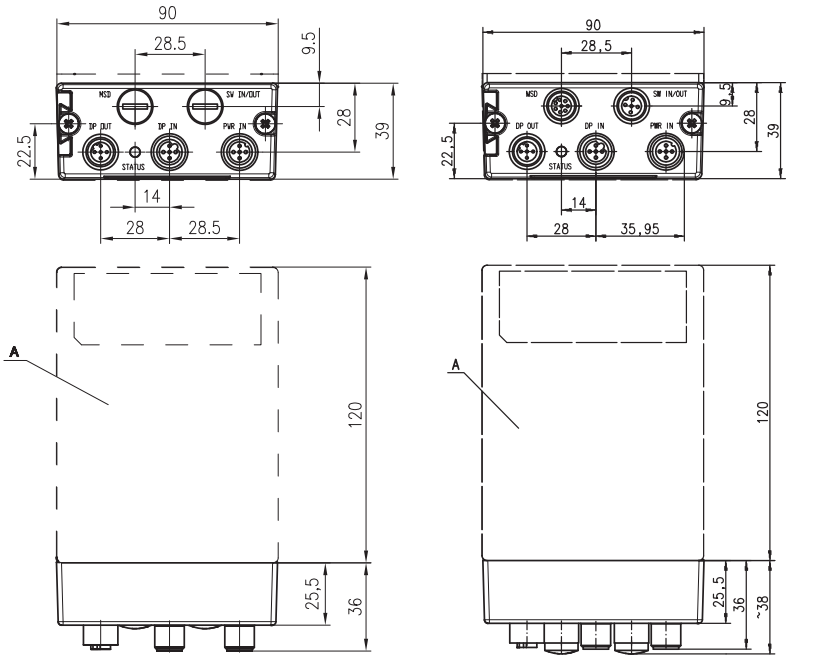

A = BPS 34

all dimensions in mm

Note!

The MSD and SW IN/OUT connections are sealed with caps upon delivery.

Figure 5.1:Dimensioned drawing MS 34 103 / MS 34 105

5.1.4 Electrical connection

Electrical data		
Interface type	PROFIBUS DP, up to 12 MBd	
Service interface[1)]	RS232 with default data format, 9600 Bd, 8 data bits, no parity, 1 stop bit	
Switching input / switching output	1 switching input, 1 switching output, each is programmable	
Operating voltage	Without optics heating:	10 … 30 VDC
	With optics heating:	22 … 26 VDC
Power consumption	Without optics heating:	5 W
	With optics heating:	max. 30 W

1) Only in combination with the MS 34 105 and MSD 1 101 devices

5.1.5 Description of the LED states

MS 34 103 / MS 34 105

A **status LED** is located between the M12 connectors DP IN and DP OUT on the modular connector hood. It indicates the state of the PROFIBUS connection.

State	Meaning
Off	Voltage off or device not yet recognized by the PROFIBUS [2)]
Green, flashing	Initialization of the device, establishing the PROFIBUS communication
Green, continuous light	Data operation
Red, flashing	Error on the PROFIBUS, error can be resolved by a reset of the control
Red, continuous light	Error on the PROFIBUS, error cannot be resolved by a reset of the control
Orange, continuous light	Service operation active

2) Note: The LED remains off until the BPS 34 is recognized by the PROFIBUS. Only after the PROFIBUS has addressed the BPS 34 for the first time, the following state descriptions apply.

5.2 MSD 1 101 modular service display

5.2.1 General information

The modular service display is used to display the calculated positions and operational data on the one hand, and as simple access to the service interface on the other. The RS 232 service interface of the BPS 34 is located on the 9-pin sub-D connector of the MSD.

To connect the MSD 1 101 to the MS 34 105, an 8-pin cable (M12) with a length of 2m is used (see chapter 10.3 "Accessories - Modular service display").

Using the service display, new settings for the BPS 34 can be tried quickly and easily, without having to configure these settings via the PROFIBUS. The settings can be made via a PC using the **BPS Configuration Tool**.

Once optimal settings for standard operation have been found, these must be configured in the PROFIBUS project in order for them to become permanently active.

Note!

The BPS 34, in combination with the MS 34 10x, is equipped with an internal parameter memory in which all configured settings are stored. When switching back from service operation to PROFIBUS operation, the settings specified in service operation are overwritten by the settings stored in the control.

Attention!

If parameters are changed that can also be set via the PROFIBUS, they are overwritten with the parameter setting defined in the PROFIBUS project after PROFIBUS start-up. If device or module parameters are to be changed permanently, they must be set in the PROFIBUS project.

5.2.2 Dimensioned drawing

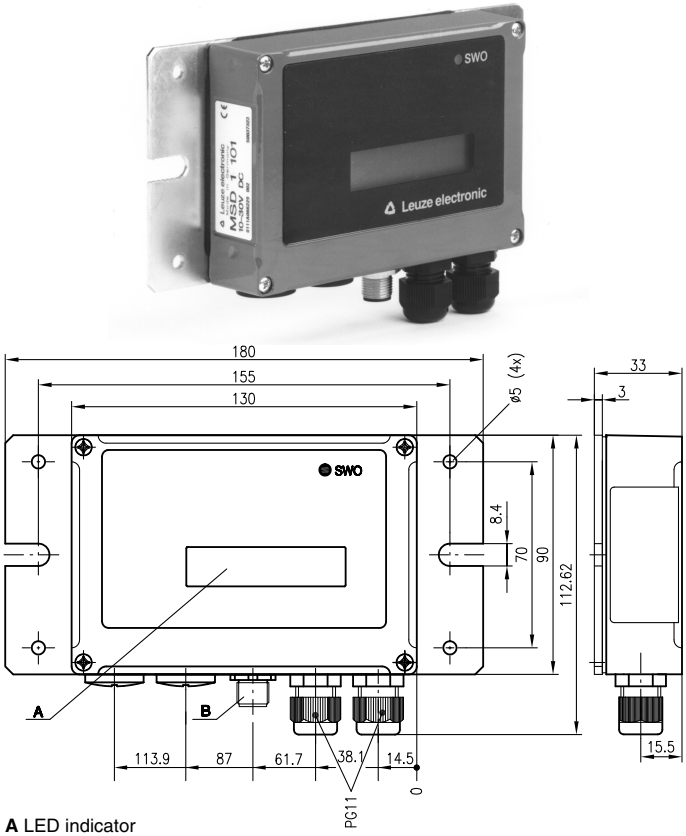

A LED indicator
B M12 device plug, 8-pin, for connecting to the MS 34 105

Figure 5.2:MSD 1 101 modular service display

5.2.3 Electrical connection

MSD 1 101

The connection between the MSD 1 101 and the MS 34 105 is established via the ready-made cable KB 034 2000. The service interface for connecting a PC is located inside the MSD 1 101 and is designed as a 9-pin sub-D connector. The pin configuration of the 9-pin sub-D connector corresponds to a standard RS 232 interface:

- PIN 2 = RxD
- PIN 3 = TxD
- PIN 5 = GND

6 Bar code tape

6.1 General information

The bar code tape (BCB) is delivered on a roll. A roll contains up to 200m of BCB, with the wrapping direction from the outside to the inside (smallest number on the outside). If a BCB is ordered which is considerably longer than 200m, the total length is divided into rolls of 200m each (see chapter 10.9 "Type overview: Bar code tape" on Page 98).

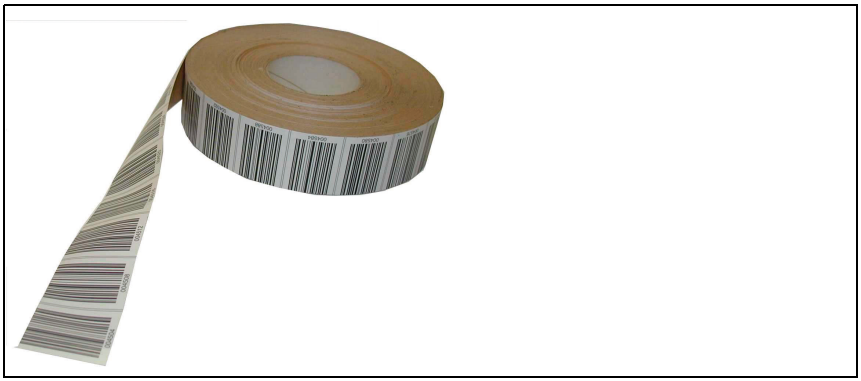

Figure 6.1:Roll with bar code tape

Features:

- Robust and durable polyester adhesive tape
- High dimensional stability
- Max. length 10,000m
- Self-adhesive, high adhesive strength

6.2 Technical data of the bar code tape

Dimensions	
Standard height	47 mm (other heights on request)
Length	0 … 5m, 0 … 10m, 0 … 20m, …, 0 … 150m, 0 … 200m, special lengths and special codings for lengths from 150m, for details see order guide in Chapter 10.9, Page 98
Structure	
Manufacturing process	Filmsetting
Surface protection	Polyester, matt
Base material	Polyester film, affixed without silicone
Adhesive	Acrylate adhesive
Strength of adhesive	0.1mm
Adhesive strength (average values)	On aluminum: 25N/25mm On steel: 25N/25mm On polycarbonate: 22N/25mm On polypropylene: 20N/25mm
Environmental data	
Processing temperature received	0 °C … -45 °C
Temperature resistance	-40 °C … -120 °C
Dimensional stability	No shrinkage, tested according to DIN 30646
Curing	Final curing after 72 h, the position can be detected immediately by the BPS 34 after the BCB is affixed
Heat expansion	Due to the high elasticity of the BCB, heat expansion of the base material on which the BCB is affixed is not known to have an effect
Tear resistance	150N
Elongation at tear	Min. 80%, tested in accordance with DIN 50014, DIN 51220
Weathering resistance	UV light, humidity, salt spray fog (150 h/5 %)
Chemical resistance (checked at 23 °C over 24 h)	Transformer oil, diesel oil, white spirit, heptane, ethylene glycol (1:1)
Behavior in fire	Self-extinguishing after 15 s, does not drip
Surface	Grease-free, dry, clean, smooth

Table 6.1: Technical data of the bar code tape

6.3 Mounting the bar code tape

To prevent deposits of dirt from forming, it is recommended that the BCB be affixed vertically, possibly with a roof-like cover. If the application does not permit this, permanent cleaning of the BCB by on-board cleaning devices such as brushes or sponges is not permitted in any case. Permanent on-board cleaning devices polish the BCB and give it a glossy finish. The reading quality deteriorates as a result.

Note!

When mounting the BCB, it must be ensured that neither strong sources of ambient light nor reflections of the base on which the BCB is affixed occur in the area of the scanning beam.

The recommended interruption points on the BCB are at the provided cut marks.

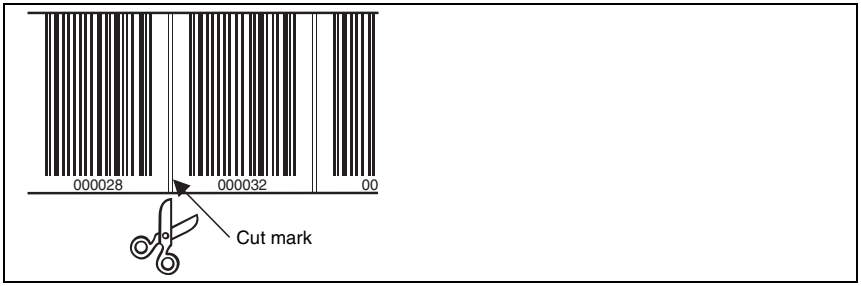

Figure 6.2:Cut mark on the bar code tape

Note!

Cutting the BCB and affixing the tape so that a gap forms which is so large that a label can no longer be reliably detected in the scanning beam results in double positions during the position calculation of the BPS. The gap must not be greater than the distance from one cut mark to the next (max. one label).

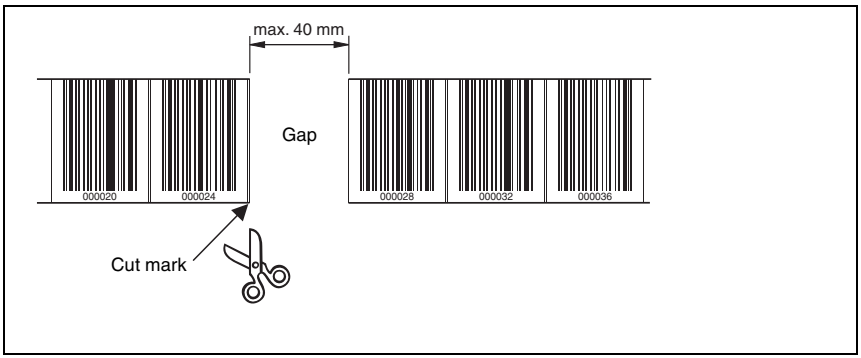

Figure 6.3:Gap in the cut bar code tape

Procedure:

- Check the surface. It must be flat, without warping, free of grease and dust, and dry.
- Define a reference edge (e.g. metal edge of the busbar)
- Remove the backing and affix the BCB along the reference edge **tension free**. Secure the bar code tape to the mounting surface by pressing down with the palm of your hand. When affixing, make certain that the BCB is free of folds and creases and that no air pockets form.
- Never pull the BCB. Because this is a plastic tape, forceful pulling may stretch it. This results in a distortion of the measurement units on the tape. While the BPS 34 can still perform the position calculation, the accuracy in this case is no longer ensured. If the values are taught using a teach-in process, distortions are irrelevant.
- Expansion joints with widths up to several millimeters can simply be covered with the bar code tape. The tape must not be interrupted at this spot.
- Protruding screw heads can simply be taped over. Cut out the bar code which covers the screw head at the cut marks.
- If the application dictates the necessity of a gap, the tape is to be affixed over this gap and the affected cut marks cut out. If the gap is small enough that the scanning beam can detect the label to the left or to the right of the gap, measurement values are delivered without interruption. If the scanning beam cannot completely scan any label, the BPS 34 returns the value 0. As soon as the BPS 34 can again scan a complete label, it calculates the next position value.
- The maximum gap between two bar code positions without affecting the measurement value is 40mm.

Note!

*If the bar code tape was damaged, e.g. by falling parts, a repair kit can be downloaded from the Internet (**www.leuze.com**).*

Attention!

Bar code tapes with different value ranges may not directly follow one another. If the value ranges are different, the gap between the two BCBs must be greater than the detection range of the scanning beam or control bar codes must be used (for further information, see also Chapter 6.4 on Page 33).

Note!

When working with the BCB in cold warehouses, it should be ensured that the BCB be affixed before the warehouse is cooled. However, if it should be necessary to work with the BCB at temperatures outside of the specified processing temperature, please make sure that the bonding surface as well as the BCB are at processing temperature.

Note!

When working with BCB in curves, the BCB should only be partially cut at the cut mark and affixed along the curve like a fan; it must also be ensured that the BCB is affixed without tension (see Figure 6.4).

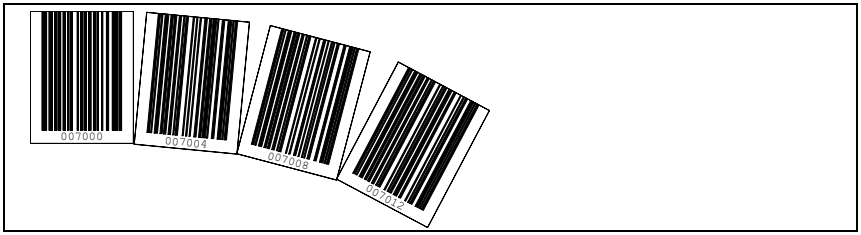

Figure 6.4:Partial cutting of the bar code tape in curves

6.4 Control bar codes

With the aid of control bar codes, which are simply affixed over the bar code tape at the necessary positions, functions can be activated and deactivated in the BPS 34.

Structure of the control bar codes

The control bar codes utilize code type Code128 with character set B; the position bar codes, on the other hand, utilize Code128 with character set C. Code 128 with character set B enables the display of all letters and numbers in the ASCII character set.

System arrangement

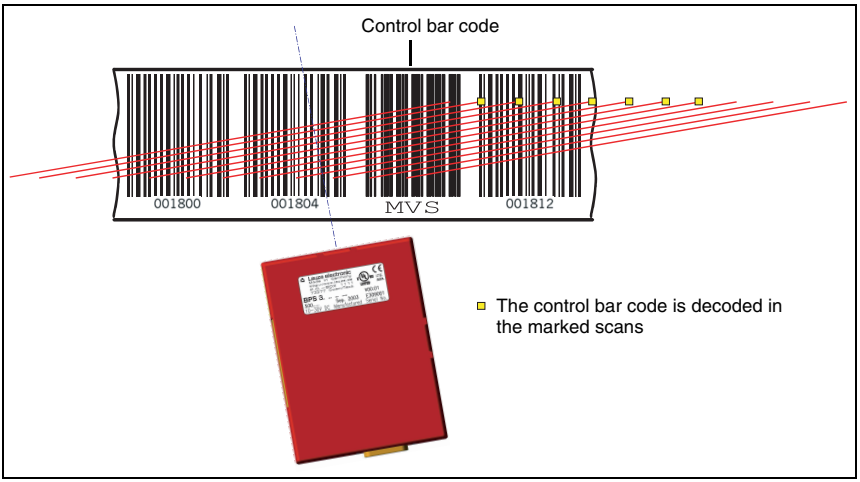

Figure 6.5:System arrangement of control bar codes

The control bar code is affixed either within one or between two bar code tapes in such a way that one position bar code is replaced or two bar code tapes are seamlessly connected to one another.

Attention!

It must be ensured that only one control bar code is located in the scanning beam at any one time. Thus, the minimum distance between two control bar codes is determined by the distance between the BPS and bar code tape and the resulting length of the scanning beam.

For error-free function, when using control bar codes it must absolutely be ensured that the distance between the BPS and bar code tape is selected large enough. The scanning beam of the BPS should cover three or more bar codes; this is ensured at a distance which lies in the working range of the reading field curve.

The control bar codes are simply affixed over the existing tape. When affixing the control bar codes, make certain to cover entire bar codes to ensure that a bar code spacing of 4 cm is maintained.

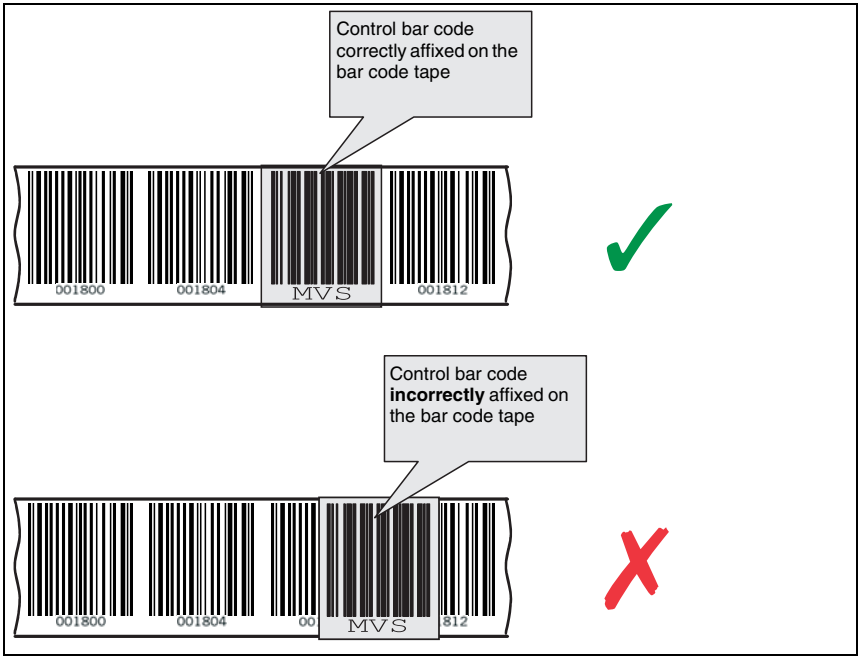

Figure 6.6:Correct positioning of the control bar code

6.4.1 Controllable functions

Measurement value switching between 2 bar code tapes with different value ranges

The "**MVS**" control bar code is used to switch between two bar code tapes. The end of one tape and the start of the next can end and begin, respectively, with completely different position bar codes. If the center of the BPS 34 reaches the transition point of the control bar code, the device switches to the second tape, provided the next position label is in its scanning beam. As a result, the output position can always be uniquely associated with one tape.

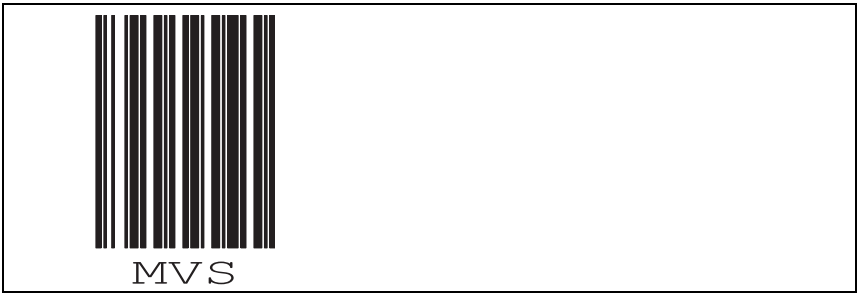

Figure 6.7:"MVS" control bar code for switching between tapes

Use of the "MVS" control bar code for switching between tapes is not dependent on direction. This means that it functions for switching from tape 1 to tape 2 and vice versa.

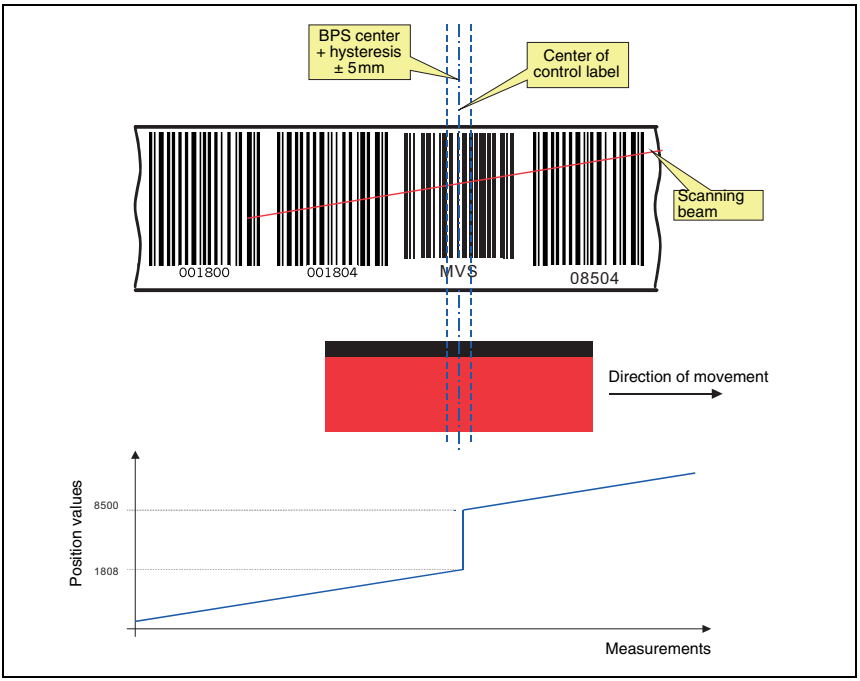

Figure 6.8:Switching position with the "MVS" control bar code

If the "MVS" label is passed over, the new tape value is always output relative to the center of the device or label (see Figure 6.8). In this situation, the hysteresis of ±5mm is irrelevant.

If, however, the device is stopped within the hysteresis on the "MVS" label and the direction changed, the starting position values have an inaccuracy ±5mm.

Note!

When affixing the BCB in a system in which the end of one BCB meets the start of another BCB (position value X with position value 0), ensure that position labels 0 - 20 are not used. This means that position label 24 must be the first label used on the continuing bar code tape.

Note!

If only the "MVS" label is read within the scanning beam, the scanning beam must not be interrupted during the read operation until the scanner can again read a complete position label.

If only the "MVS" label is located in the scanning beam, the voltage on the BPS 34 must not be switched off. Otherwise the BPS 34 will return a position value of zero when the voltage is switched back on.

Moreover, the scanner must not be configured while in this position. Otherwise, a value of zero is output as long as no position label is present in the scanning beam due to the fact that the scanning beam is switched off during configuration.

6.5 Repair kit

Note!

*If the bar code tape was damaged, e.g. by falling parts, a repair kit can be downloaded from the Internet (**www.leuze.com**).*

In these files you will find all code information for a tape with the length of 500 m within the range of 0 … 9999.96 m. 1 m of bar code tape is provided on each A4 sheet. Each meter is divided into 5 lines of 20 cm, each with 5 code segments of information covering lengths of 4 cm each.

Procedure when replacing the defective area:

1. Determine the coding of the defective area.
2. Print out the area determined to be defective
3. Affix the printed area over the defective location

Important note for printing:

1. Select only those pages that are required.
2. Change the printer settings so that the code is not distorted.
   Suggestion for printer settings, see Figure 6.9.
3. Verify the printing result by measuring the distance between two codes (see Figure 6.10).
4. Cut the code strips and concatenate them. It is important that the code content always increases or decreases in blocks of 4 cm.

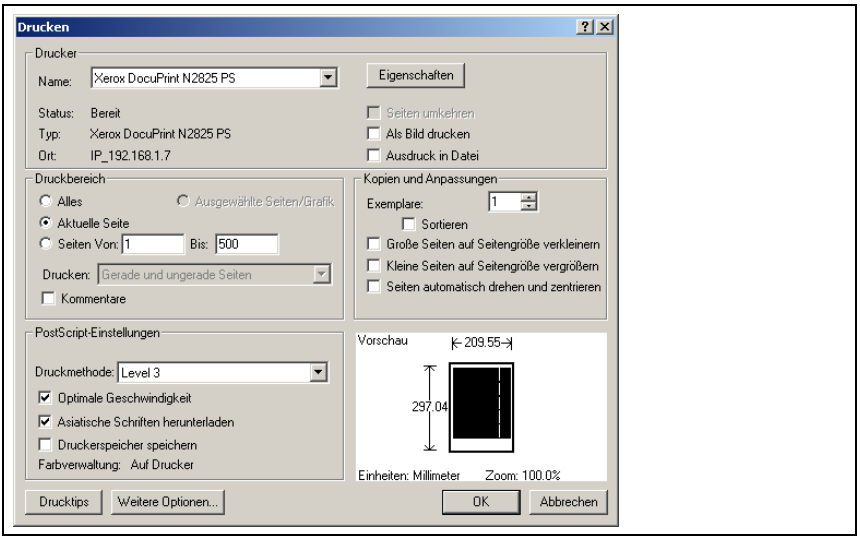

Figure 6.9:Printer settings for BCB repair kit

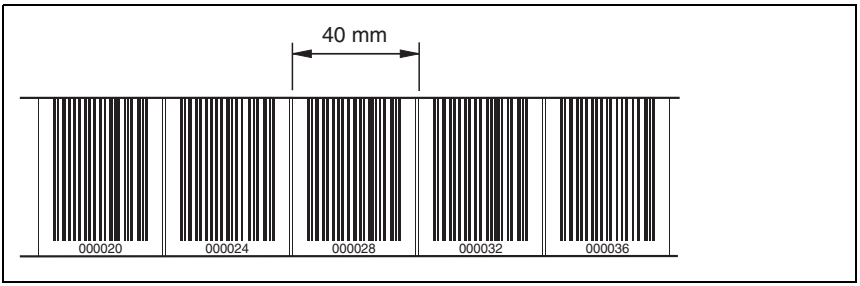

Figure 6.10:Checking the print results of the BCB repair kit

7 Mounting

7.1 Mounting the BPS 34

There are 2 different types of mounting arrangements for the BPS 34:

- Using 4 M4x6 screws on the rear of the device.
- Using the BT 56 mounting device on the fastening grooves.

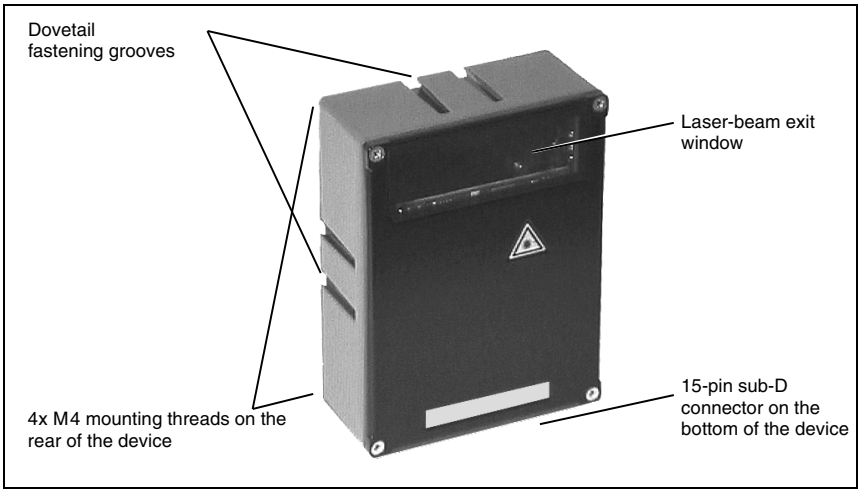

Figure 7.1:BPS 34 mounting options

BT 56 mounting device

The BT 56 mounting device is available for mounting the BPS 34 using the fastening grooves. It is designed for rod mounting (Ø 16mm to 20mm). For order guide, please refer to Chapter 10.6 on Page 95.

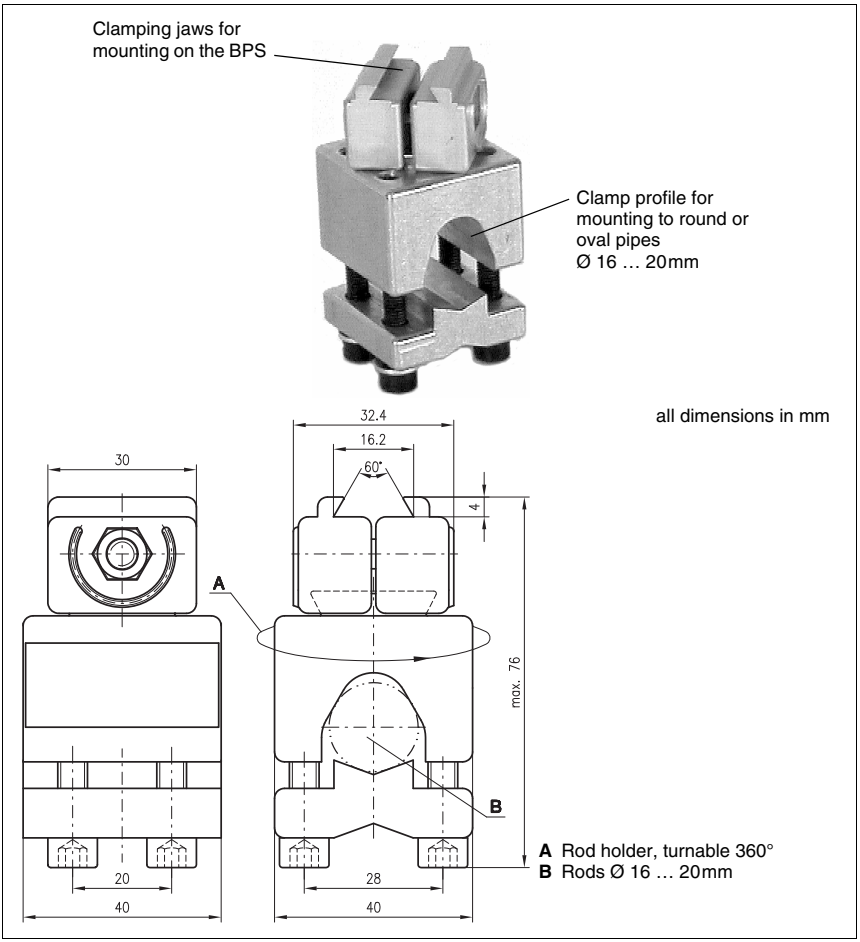

Figure 7.2:BT 56 mounting device

Mounting example BPS 34

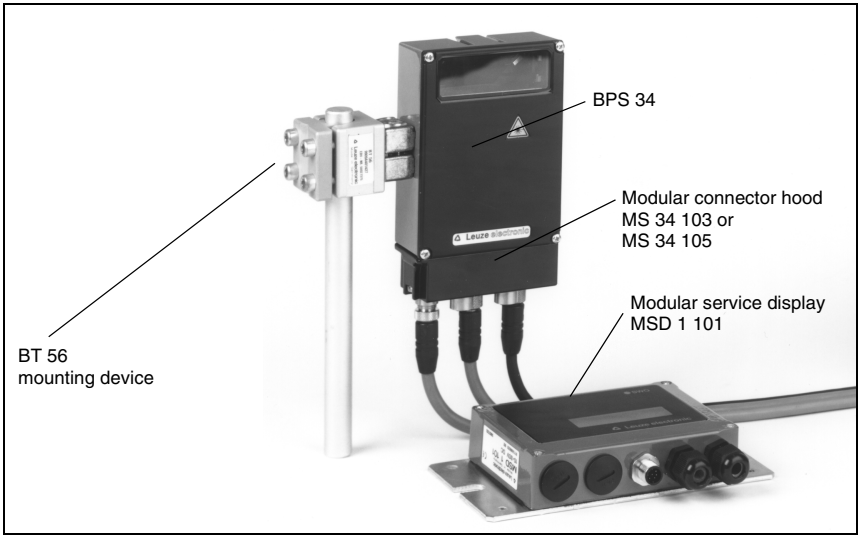

Figure 7.3:Mounting example BPS 34

Note!

During mounting, the following angles of inclination must be taken into account in the vertical axis:
10° for a tape height of 47mm,
7° for a tape height of 30mm and
5° for a tape height of 25mm;
the working range of the reading field curve must also be taken into account.

Attention!

For the position calculation, the scanning beam of the BPS 34 must be incident on the bar code tape without interruption. Ensure that the scanning beam is always incident on the bar code tape when the system is moving.

7.2 Device arrangement

Selecting a mounting location

In order to select the right mounting location, several factors must be considered:

- The scanning range determined from the scanning curve must be adhered to at all areas at which a position determination is to be made
- The BPS should be mounted at an angle of 10° (depending on the tape height, see note Page 40) in the vertical axis towards the bar code tape to ensure continued reliable positioning results even the bar code tape is soiled.
- On the BPS 34, the beam is not emitted perpendicular to the cover of the housing, but with an angle of 10° towards the top. This angle is intended to prevent total reflection on the bar code tape. This beam exit is already integrated in the device. As a result, the BPS can be at the minimum reading distance and mounted parallel to the bar code tape.

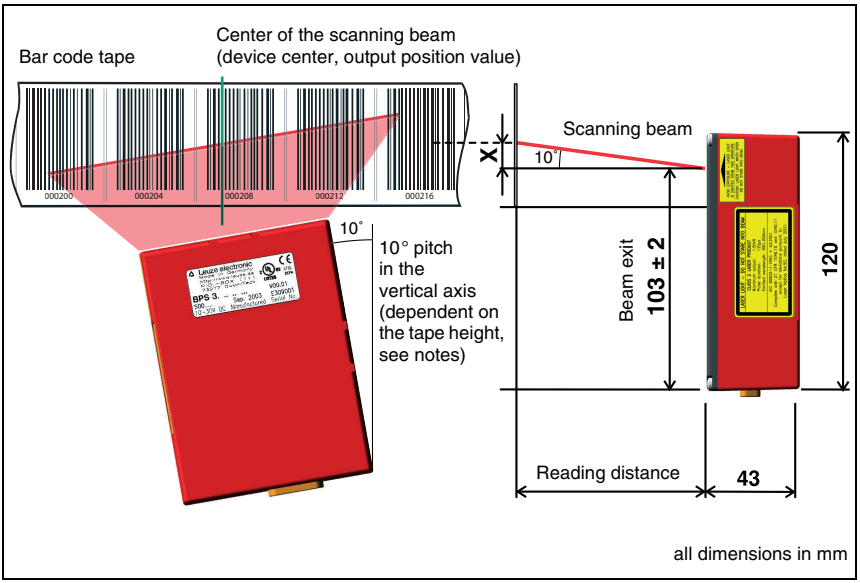

Figure 7.4:Beam exit and device arrangement of the BPS 34

Dimension **X** in Figure 7.4 shows the mounting height of the BCB center relative to the housing of the BPS 34. Dimension **X** is dependent on the reading distance. Please refer to the following table for the value:

Reading distance [mm]	Dim. **X** [mm]	Reading distance [mm]	Dim. **X** [mm]	Reading distance [mm]	Dim. **X** [mm]
90	16	120	21	150	26
100	18	130	23	160	28
110	19	140	25	170	30

Note!

The best functionality is obtained when:

- the BPS is guided parallel to the tape.
- the permitted working range is not exited.

Mounting location

↳ When choosing the mounting location, observe the following:

- maintaining the required environmental conditions (humidity, temperature),
- possible soiling of the reading window due to liquids, abrasion by boxes, or packaging material residues.

Mounting outdoors/devices with integrated heating

When mounting outdoors or for devices with integrated heating, also observe the following points:

- mount the BPS 34 in a way which provides maximum thermal isolation, e.g. using rubber-bonded metal.
- mount in such a way that the device is protected from relative wind; mount additional shields if necessary.

Note!

When installing the BPS 34 in a protective housing, it must be ensured that the scanning beam can exit the protective housing without obstruction.

7.3 Mounting the bar code tape

The BPS 34 and bar code tape combination is mounted in such a way that the scanning beam is uninterrupted and is incident on the bar code tape as described in Figure 7.4 on Page 41.

Note!

For further information on mounting the bar code tape, please refer to Chapter 6.3 on Page 30.

8 Device parameters and interfaces

8.1 PROFIBUS

8.1.1 General information

The BPS 34 with MS 34 103/MS 34 105 is designed as a PROFIBUS device (PROFIBUS DP-V0 acc. to IEC 61784-1) with a baud rate of 12MBd. The functionality of the device is defined via parameter sets which are clustered in modules. These modules are contained in a GSD file. The **GSD file** can be downloaded from the Leuze homepage at **www.leuze.com**. By using an application-specific configuration tool, such as, e.g. Simatic Manager for the Siemens PLC, the required modules are integrated into a project during commissioning and its settings and parameters are configured accordingly. These modules are provided by the GSD file.

All input and output modules described in this documentation are described from the viewpoint of the control:

- Input data arrives at the control
- Output data is sent out by the control.

8.1.2 Electrical connection

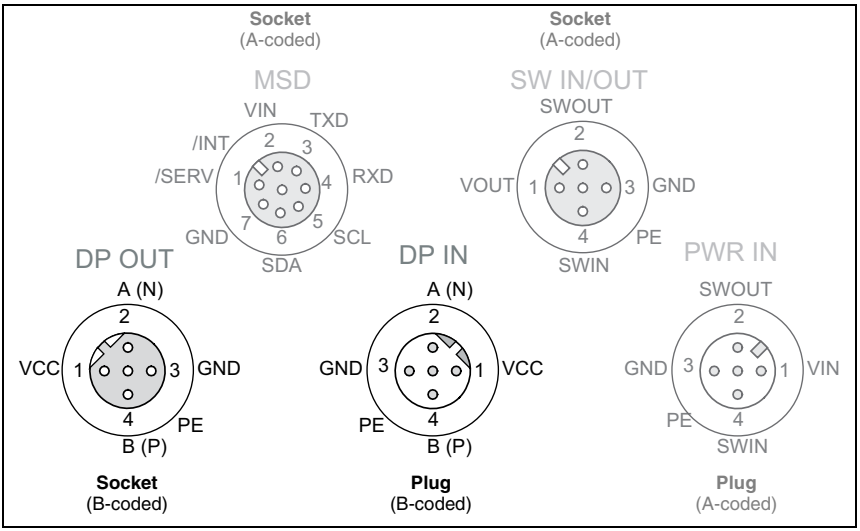

Figure 8.1:Electrical connection of PROFIBUS connections DP IN and DP OUT

DP IN - PROFIBUS DP incoming

DP IN (5-pin plug, B-coded)			
DP IN 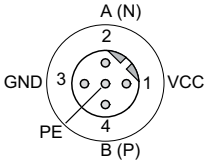 **M12 plug (B-coded)**	**Pin**	**Name**	**Comment**
	1	**VCC**	5VDC for bus termination
	2	**A (N)**	Receive/transmit data A-line (N)
	3	**GND**	Functional earth for bus termination
	4	**B (P)**	Receive/transmit data B-line (P)
	5	**PE**	Functional earth
	Thread	**PE**	Functional earth (housing)

Figure 8.2:Pin assignment - DP IN

DP OUT - PROFIBUS DP outgoing

DPOUT (5-pin socket, B-coded)			
DP OUT 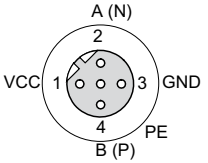 **M12 socket (B-coded)**	**Pin**	**Name**	**Comment**
	1	**VCC**	5VDC for bus termination
	2	**A (N)**	Receive/transmit data A-line (N)
	3	**GND**	Functional earth for bus termination
	4	**B (P)**	Receive/transmit data B-line (P)
	5	**PE**	Functional earth
	Thread	**PE**	Functional earth (housing)

Figure 8.3:Pin assignment - DP IN

Attention!

Degree of protection IP 65 is achieved only if the connectors and caps are screwed into place!

Note!

For connecting DP IN and DP OUT, we recommend our ready-made PROFIBUS cables. For further information on this topic, refer to Chapter 10.8 on Page 97.

The BPS 34 can be used in combination with an MS 34 103/MS 34 105 to branch out the PROFIBUS network. The continuing network is connected via DP OUT.

If the PROFIBUS is not connected to another participant via the MS 34 10x, the DP OUT connection must be fitted with a TS 02-4-SA terminator plug for the purpose of bus termination. For further information, see also Chapter 10.4 on Page 95.

Attention!

Never open the device yourself, as this may compromise degree of protection IP 65.

Before connecting the device, be sure that the supply voltage agrees with the value printed on the name plate.

Connection of the device and cleaning must only be carried out by a qualified electrician.

The power supply unit for the generation of the supply voltage for the BPS 34 and the respective connection units must have a secure electrical insulation through double insulation and safety transformers according to EN 60742 (corresponds to IEC 60742).

Be sure that the protective conductor is connected correctly. Fault-free operation is only guaranteed when the device is properly earthed.

If faults cannot be cleared, the device should be switched off and protected against accidental use.

To then further isolate the error, proceed as described in Chapter 9 on Page 93.

8.1.3 PROFIBUS address

In the MS 34 103 and MS 34 105 modular connector hoods, the PROFIBUS address can be set via two rotary switches and one slide switch.

The configuration and function of the address switches is shown in Figure 8.4.

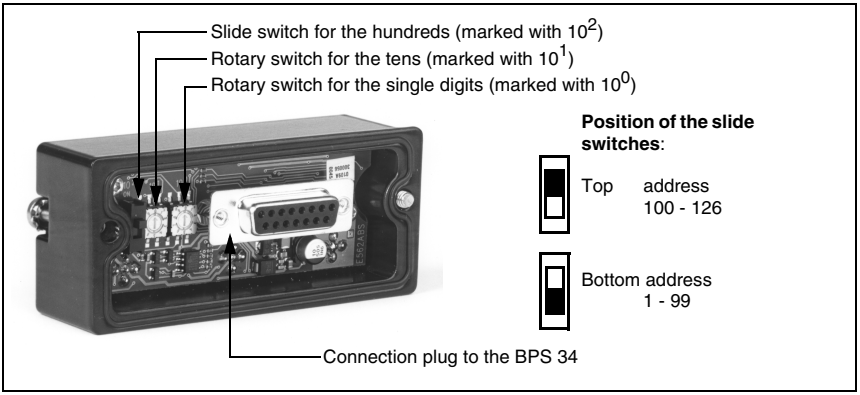

Figure 8.4:Setting the PROFIBUS address in the MS 34 103/MS 34 105

8.1.4 General information on the GSD file

You can find the GSD file at **www.leuze.com**.

This file stores all the data required for the operation of the BPS 34. This data consists of device parameters required for the operation of the BPS 34 and the definition of the control and status bits. If parameters are changed in the project tool, for example, these changes are stored in the project, not in the GSD file.

The GSD file is part of the device and must not be changed manually. The file is not changed by the system either.

If the BPS 34 is operated in a PROFIBUS network, configuration must be performed exclusively via the PROFIBUS. The functionality of the BPS 34 is defined via parameter sets. The parameters and their functions are structured in the GSD file using modules. A user-specific configuration tool is used during PLC program creation to integrate the required modules and configure them appropriately for their respective use.

During operation of the BPS 34 on the PROFIBUS, all parameters are set to default values. If these parameters are not changed by the user, the device functions with the default settings delivered by Leuze electronic. For the default settings of the BPS 34, please refer to the following module descriptions.

Note!

A least one module in the GSD file must be activated in the configuration tool for the control, usually the "Position value" module 1.

Note!

*Some controls make available a so-called "universal module". This module must **not** be activated for the laser.*

Attention!

The BPS 34 does not permanently store parameters changed via the PROFIBUS. Following Power off/on, the currently configured parameters are downloaded from the PROFIBUS manager. If no PROFIBUS manager is available following Power off/on, the BPS 34 activates its stored default settings.

8.1.5 Structure of the GSD modules

In the current version, a total of 27 modules are available for use. The modules may be included into the project according to requirements and application.

The modules fall into the following categories:

- Parameter module for the configuration of the BPS 34.
- Status or control modules that influence the input/output data.
- Modules that may include both parameters and control or status information.

Note!

*All **input and output modules** described in this documentation are described **from the viewpoint of the control**:*
Inputs (I) described are inputs of the control.
Outputs (O) described are outputs of the control.
Parameters (P) described are parameters of the GSD file in the control.

Note!

***At least one module** must be activated to permit operation of the device at the PROFIBUS DP.*

Note!

Under some circumstances, not all 27 modules can be activated simultaneously in the configuration tool. Otherwise, the available memory for a participant may be exceeded. The maximum available memory for a device is control dependent.

8.1.6 Overview of the GSD modules

Note!

Inputs and outputs are described from the viewpoint of the PROFIBUS master.

Module Page	Module name	Module contents (P) = Parameter, (O) = Output, (I) = Input
M1 **Page 52**	**Position value**	(P) Sign
		(I) Position value
M2 **Page 53**	**Resolution**	(P) Resolution for the position value
M3 **Page 54**	**Static preset**	(P) Preset value added to tape value
		(O) Preset teach
		(O) Preset reset
M4 **Page 56**	**Dynamic preset**	(O) Preset teach
		(O) Preset reset
		(O) Preset value
M5 **Page 57**	**Offset value**	(P) Offset value
M6 **Page 58**	**Scaling**	(P) Scaling factor
M7 **Page 60**	**Switching input**	(P) Inversion
		(P) Mode
		(P) Debounce time
		(P) start-up delay
		(P) Pulse duration
		(P) Switch-off delay
		(P) Function
		(I) State
M8 **Page 62**	**Switching output**	(P) Bias level
		(P) Selection of the speed limit value
		(P) Pulse duration
		(P) Switch-on function
		(P) Switch-off function
		(O) Switching output "PROFIBUS edge"
M9 **Page 64**	**Control**	(P) Measurement start mode
		(P) Measurement stop mode
		(P) Stop timeout
		(I) Position control state
		(O) Start event
		(O) Stop event
		(O) BPS standby
M10 **Page 66**	**Measurement value acquisition**	(P) Maximum permitted measurement length
		(P) Minimum permitted measurement length
M11 **Page 67**	**Measurement value preparation**	(P) Integration depth
		(O) Counting direction for position calculation

Module Page	Module name	Module contents (P) = Parameter, (O) = Output, (I) = Input
M12 Page 70	**Status**	(I) Measurement error
		(I) Range state (outside of measurement range)
		(I) Preset active
		(I) Dynamic preset teach
		(I) State
		(I) Position limit value status 1
		(I) Position limit value status 2
		(I) Standby status
M13 Page 71	**Min./max. position**	(P) Min./max. mode
		(P) Min./max. duration
		(I) Min. position
		(I) Max. position
		(O) Min./max. reset
M14 Page 73	**Static position limit value 1**	(P) Limit value check on/off
		(P) Switching type (value is above or below the defined limits)
		(P) Hysteresis
		(P) Limit value
M15 Page 74	**Static position limit value 2**	(P) Limit value check on/off
		(P) Switching type (value is above or below the defined limits)
		(P) Hysteresis
		(P) Limit value
M16 Page 75	**Dynamic position limit value 1**	(P) Limit value check on/off
		(P) Switching type (value is above or below the defined limits)
		(P) Hysteresis
		(O) Limit value
M17 Page 76	**Dynamic position limit value 2**	(P) Limit value check on/off
		(P) Switching type (value is above or below the defined limits)
		(P) Hysteresis
		(O) Limit value
M18 Page 77	**Measurement error tolerance**	(P) Position tolerance time
		(P) Error output delay
M19 Page 78	**Service**	(I) Status
		(O) Reset to factory settings
M20 Page 79	**Speed**	(I) Current speed
M21 Page 80	**Speed parameters**	(P) Resolution
		(P) Scaling factor
		(P) Integration depth
		(P) Tolerance time (on error message)
		(P) Error output delay

Module Page	Module name	Module contents (P) = Parameter, (O) = Output, (I) = Input
M22 Page 82	**Speed measurement control**	(P) Speed measurement start mode
		(P) Speed measurement stop mode
		(I) Speed measurement state
		(O) Start event
		(O) Stop event
		(O) Min./max. speed mode
		(O) Min./max. speed reset
M23 Page 84	**Speed measurement status**	(I) Measurement error
		(I) Limit value status 1 exceeded
		(I) Limit value status 2 exceeded
		(I) Limit value status 3 exceeded
		(I) Limit value status 4 exceeded
		(I) Dynamic limit value status exceeded
		(I) Movement status
		(I) Direction of movement
		(I) Compare limit value state 1
		(I) Compare limit value state 2
		(I) Compare limit value state 3
		(I) Compare limit value state 4
		(I) Compare dynamic limit value state
M24 Page 86	**Min./max. speed**	(I) Minimum speed
		(I) Maximum speed
M25 Page 87	**Static speed limit values (for limit value 1 … 4)**	(P) Speed limit value mode (active/not active)
		(P) Direction selection (both directions or only one)
		(P) Switching type (value is above or below the defined limits)
		(P) Speed limit value
		(P) Hysteresis
		(P) Range start
		(P) Range end
M26 Page 89	**Dynamic speed limit values**	(O) Limit value control
		(O) Switching type (value is above or below the defined limits)
		(O) Direction selection
		(O) Limit value
		(O) Hysteresis
		(O) Range start
		(O) Range end
M27 Page 91	**Tape value correction**	(P) Real length
		(P) Range start
		(P) Range end

Table 8.1: Overview of the GSD modules

8.1.7 Detailed description of the modules

Note!

*In the following detailed descriptions of the modules, you will find in the last column of the tables **cross references (CR) to parameters and input/output data of other modules** which are directly related to the described parameter. **These cross references must be observed during configuration**.*

*The individual **modules** are **numbered** from **1 … 27**.*
*The **parameters and input/output data** within a module are **alphanumerically** labeled* a *from …* z *.*

Example:

The a **Static preset value in [mm]** parameter in module 3 only becomes active when the preset teach occurs via module 12 c, 7 g or 3 b.

8.1.7.1 Module 1: Position value

Description:

With this module, the current position value is output.

Note!

The position value is the position value calculated from the tape value and the settings for resolution, preset and offset.

Parameters

Parameter	Description	Rel. addr.	Data type	Value range	Default	Unit	CR to module
a **Sign**	Output mode for sign.	0	unsign 8	**0: Two's complement** 1: Sign + magnitude	**0**	–	–
Parameter length: 1 byte							

Hex coding of module 1 "Position value"

The value listed in the table shows the hex coding of the default settings.

Internal address of module 1	Sign
13	**00**

Input data

Input data	Description	Rel. addr.	Data type	Value range	Default	Unit	CR to module
b **Position value**	Output of the current position	0	sign 32	-10,000,000 … -10,000,000 (for a resolution in mm)	**0**	Scaled	–
Input data length: 4 byte							

Note!

A negative number is represented in the input data by a 1 in the most significant bit.

Output data

None

8.1.7.2 Module 2: Resolution

Description

With this module, the resolution for the position value of module 1 is defined. The BPS 34 also performs a rounding correction (The position value is divided by the defined value range).

Note!

The resolution only determines the mathematical decimal value and has no effect on the measurement accuracy.

Parameters

Parameter	Description	Rel. addr.	Data type	Value range	Default	Unit	CR to module
a **Resolution in [mm]**	The parameter specifies the resolution for the position value. The resolution has no effect on - Static preset - Dynamic preset - Offset	0	unsign 8	1: 0.01 2: 0.1 **3: 1** 4: 10 5: 100 6: 1,000	**3**	mm	–
Parameter length: 1 byte							

Hex coding of module 2 "Resolution"

The value listed in the table shows the hex coding of the default settings.

Internal address of module 2	Resolution
0A	**03**

Input data

None

Output data

None

8.1.7.3 Module 3: Static preset

Note!

Underlined in the CR column are the modules which must be activated in addition to the current module.

Description

With this module, a preset value can be defined which the BPS 34 outputs following a teach event. Defined as a teach event is either bit 0.0 in the output data of this module or a switching input function. After reading in the teach event, the current position value is replaced by the preset value and the position value is now calculated and output on the basis of the preset value. The preset remains stored in the BPS 34 and remains active even following a new start. In order for the BPS 34 to again output the position value without the preset, bit 0.1 in the output data must be set.

Note!

In the event of a device change, the preset value is retained in the MS 34 10x. The activation of the preset value (preset teach) at the intended position is not necessary.

Parameters

Parameter	Description	Rel. addr.	Data type	Value range	Default	Unit	CR to module
a **Static preset value in [mm]**	New position value after teach event	0	unsign 32	0 … 10,000,000	**0**	mm	12c 7g or 3b
Parameter length: 4 byte							

Note!

*The preset value is **always entered in units of mm**, independent of the resolution setting (module 2). The scaling factor (module 6) has no effect on the static preset value.*

Hex coding of module 3 "Static preset"

The value listed in the table shows the hex coding of the default settings.

Internal address of module 3	Static preset
06	**00 00 00 00**

Input data

None

Output data

Output data	Description	Rel. addr.	Data type	Value range	Default	Unit	CR to module
b **Preset teach**	Read in the preset value	0.0	Bit	0->1 = Teach	**0**	–	–
c **Preset reset**	Preset value is deactivated	0.1	Bit	0->1 = Reset	**0**	–	–
Output data length: 1 byte							

8.1.7.4 Module 4: Dynamic preset

Note!

Underlined in the CR column are the modules which must be activated in addition to the current module.

Description

With this module, a preset value can be defined which the BPS 34 outputs following a teach event. Defined as a teach event is either bit 0.0 in the output data of this module or a switching input function. After reading in the preset, the current position value is replaced by the preset value and the position is now calculated and output on the basis of the preset. The preset remains stored in the BPS 34 and remains active even following a new start. In order for the BPS 34 to again output the tape value, bit 0.1 in the output data must be set (preset reset). The preset value is transmitted to the BPS 34 together with the output data of the PROFIBUS master. Thus, it can be changed during operation (dynamically).

Parameters

None

Input data

None

Output data

Output data	Description	Rel. addr.	Data type	Value range	Default	Unit	CR to module
a **Preset teach**	Read in the preset value	0.0	Bit	0->1 = Teach	**0**	–	12c 12d 7g or 4a
b **Preset reset**	Reset to default, deactivate preset value	0.1	Bit	0->1 = Reset	**0**	–	
c **Preset value**	New position value after preset teach	1	unsign 32	0 … 10,000,000	**0**	mm	
Output data length: 5 byte							

Note!

*The preset value is **always entered in units of mm**, independent of the resolution setting (module 2). The scaling factor (module 6) has no effect on the dynamic preset value.*

8.1.7.5 Module 5: Offset value

Note!

Underlined in the CR column are the modules which must be activated in addition to the current module.

Description

This module adds an offset value to the tape value.

Parameters

Parameter	Description	Rel. addr.	Data type	Value range	Default	Unit	CR to module
a **Offset value in [mm]**	Offset value added to tape value	0	sign32	-10,000,000 … 10,000,000	**0**	mm	1
Parameter length: 4 byte							

Note!

If module 3 "Static preset" or module 4 "Dynamic preset" is activated and, as a result, a new value assigned to the tape value, the offset function no longer affects the position value. The offset is not reactivated until the preset function (static and dynamic) is canceled. The offset value is entered in mm. When entering the offset value, the scaling in module 6 must be taken into account.

Hex coding of module 5 "Offset value"

The value listed in the table shows the hex coding of the default settings.

Internal address of module 5	Offset value
09	**00 00 00 00**

Input data

None

Output data

None

8.1.7.6 Module 6: Scaling

Note!

Underlined in the CR column are the modules which must be activated in addition to the current module.

Description

The scaling function is used to convert the tape values to any unit of measurement. To do this, the tape value is multiplied by the scaling factor.

Parameters

Parameter	Description	Rel. addr.	Data type	Value range	Default	Unit	CR to module
a **Scaling factor in [‰]**	Scaling factor used to convert the position values	0	unsign 16	0 … 65,535	**1,000**	Per thousand	1
Parameter length: 2 byte							

Note!

When entering offset values in module 5, it must be ensured that the scaling factor is taken into account.

Affected by this module are:

- *Offset value (module 5)*
- *Static position limit values 1 and 2 (modules 14 and 15)*
- *Hysteresis of static position limit values 1 and 2 (modules 14 and 15)*
- *Dynamic position limit values 1 and 2 (modules 16 and 17)*
- *Hysteresis of dynamic position limit values 1 and 2 (modules 16 and 17)*

The static preset or dynamic preset modules (module 3 or module 4) are not affected by the scaling.

Hex coding of module 6 "Scaling"

The value listed in the table shows the hex coding of the default settings.

Internal address of module 6	Scaling factor
08	03 E8

Input data

None

Output data

None

8.1.7.7 Module 7: Switching input

Note!

Underlined in the CR column are the modules which must be activated in addition to the current module.

Description

The module defines the mode of operation of the digital switching input.

Parameters

Parameter	Description	Rel. addr.	Data type	Value range	Default	Unit	CR to module
a **Inversion**	The parameter defines the logic of the applied signal. In case of an inversion, an external HIGH level is interpreted as an internal LOW level.	0	unsign 8	**0: No (active high)** 1: Yes (active low)	**0**	–	–
b **Mode**	This parameter controls the release of the switching input.	1	unsign 8	0: Off **1: On**	**1**	–	–
c **Debounce time in [ms]**	This parameter defines a debounce time which is implemented via software. 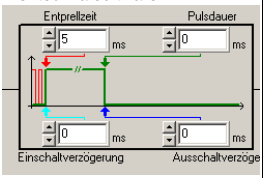	2	unsign 8	0 … 255	**5**	ms	–
d **Start-up delay in [ms]**	The parameter influences the timing during switch-on. 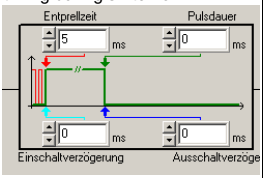	3	unsign 16	0 … 65,535	**0**	ms	–
e **Pulse duration in [ms]**	The parameter defines the minimum pulse duration of the input signal. 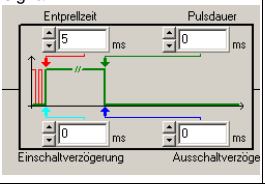	5	unsign 16	0 … 65,535	**0**	ms	–

f **Switch-off delay in [ms]**	The parameter defines a time delay for the signal during switch-off. 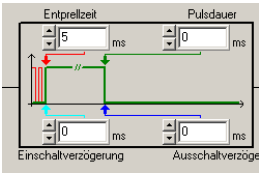 	7	unsign 16	0 … 65,535	**0**	ms	–
g **Function**	The parameter specifies the function which is to be activated or deactivated by a status change at the switching input.	9	unsign 8	0: No function	**7**	–	–
				4: Teach preset			3a or 4c
				5: Reset min./max. position			13e
				7: Start position measurement			9a
				9: Stop position measurement			9b
				10: Teach limit value 1			14a 16a
				11: Teach limit value 2			15a 17a
				12: Reset min./max. speed			22b 24
				13: Start speed measurement			22a
				14: Stop speed measurement			22b
Parameter length: 10 byte							

Hex coding of module 7 "Switching input"

The value listed in the table shows the hex coding of the default settings.

Internal address of module 7	Inversion address 0	Mode address 1	Debounce time address 2	Start-up delay address 3	Pulse duration address 5	Switch-off delay address 7	Function address 9
01	00	01	05	00 00	00 00	00 00	04

Input data

Input data	Description	Rel. addr.	Data type	Value range	Default	Unit	CR to module
h **State**	Signal state of the switching input	0.0	Bit	**0: Input is not active** 1: Input is active	**0**	–	–
Input data length: 1 byte							

Output data

None

8.1.7.8 Module 8: Switching output

Note!

Underlined in the CR column are the modules which must be activated in addition to the current module.

Description

The module defines the mode of operation of the digital switching output.

Parameters

Parameter	Description	Rel. addr.	Data type	Value range	Default	Unit	CR to module
a **Bias level**	The parameter defines the bias level of the switching output.	0	unsign 8	**0: LOW (0V)** 1: HIGH (+U_B)	**0**	–	–
b **Selection of the speed limit value**	Defines whether the switching output is controlled by static speed limit value 1, static speed limit value 2, static speed limit value 3, static speed limit value 4 or the dynamic speed limit value	 1.0 1.1 1.2 1.3 1.4	Bits	For each **0: No** 1: Yes	 **0** **0** **0** **0** **0**	–	 25 for static 26 for dynamic
c **Pulse duration in [ms]**	The parameter defines the switch-on time period for the switching output. If the value is 0, the signal is static.	2	unsign 16	0 … 1,300	**400**	ms	–
d **Switch-on function [EF]**	The parameter specifies the events which set the switching output: - speed valid - speed not valid - position limit value 1 reached - position limit value 1 not reached - outside measurement range - within measurement range - position limit value 2 reached - position limit value 2 not reached - erroneous measurement - successful measurement - PROFIBUS pos. edge - PROFIBUS neg. edge - speed limit value reached - speed limit value not reached	 4.0 4.1 4.2 4.3 4.4 4.5 4.6 4.7 5.2 5.3 5.4 5.5 5.6 5.7	Bits	For each 0: Not active 1: Active	 **0** **0** **0** **0** **0** **0** **0** **0** **1** **0** **0** **0** **0** **0**	–	 22 22 14 + 16 14 + 16 10 10 15 + 17 15 + 17 1 + 9 1 + 9 8 8 25 25

e **Switch-off function [AF]**	The parameter specifies the events which reset the switching output: - speed valid - speed not valid - position limit value 1 reached - position limit value 1 not reached - outside measurement range - within measurement range - position limit value 2 reached - position limit value 2 not reached - erroneous measurement - successful measurement - PROFIBUS pos. edge - PROFIBUS neg. edge - speed limit value reached - speed limit value not reached	 6.0 6.1 6.2 6.3 6.4 6.5 6.6 6.7 7.2 7.3 7.4 7.5 7.6 7.7	Bits	For each 0: Not active 1: Active	 **0** **0** **0** **0** **0** **0** **0** **0** **0** **1** **0** **0** **0** **0**	–	 22 22 14 + 16 14 + 16 10 10 15 + 17 15 + 17 1 + 9 1 + 9 8 8 25 25
Parameter length: 8 byte							

Note!

The events of the switch-on function and switch-off function are both linked to one another with a logical OR.

Hex coding of module 8 "Switching output"

The value listed in the table shows the hex coding of the default settings.

Internal address of module 8	Bias level address 0	Selection of the speed limit value address 1	Pulse duration address 2	Switch-on function address 4	Switch-off function address 6
02	**00**	**00**	**01 90**	**04 00**	**08 00**

Input data

None

Output data

Output data	Description	Rel. addr.	Data type	Value range	Default	Unit	CR to module
f **Switching output PROFIBUS edge**	This bit can be used to operate the switching output if the "PROFIBUS edge" function is configured.	0.0	Bit	0 -> 1: Positive edge **1 -> 0: Negative edge**	**0**	–	–
Output data length: 1 byte							

Note!

With the "PROFIBUS edge" function, the switching output can be directly activated or deactivated by setting bit 0.0.

8.1.7.9 Module 9: Control

Description

The Control module manages timing of the position calculation by starting and stopping the decoding. Control is performed depending on certain events such as the switching input, time functions or PROFIBUS output bits. Using parameters, the events which influence the states are determined.

Parameters

Parameter	Description	Rel. addr.	Data type	Value range	Default	Unit	CR to module
a **Measurement start mode**	The start mode determines by which event the position measurement is started.	0	unsign 8	0: Deactivated **1: After initialization** 2: Following event: Switching input or start event by setting output bit 0.0	**1**	–	7g
b **Measurement stop mode**	The measurement stop mode determines after which event the position measurement is stopped.	1	unsign 8	0: No function 1: After valid measurement result 2: After timeout (stop timeout) 3: After timeout with re-trigger (stop timeout) by setting output bit 0.0 or by the switching input **4: By stop event or by setting output bit 0.1** or by the switching input (the switching input must be programmed for this purpose) 5: By errors	**4**	–	7g
c **Stop timeout in [ms]**	Time for stop timeout	2	unsign 16	0 … 65,535	**10,000**	ms	–
Parameter length: 4 byte							

Hex coding of module 9 "Control"

The value listed in the table shows the hex coding of the default settings.

Internal address of module 9	Measurement start mode address 0	Measurement stop mode address 1	Stop timeout address 2
03	01	04	27 10

Input data

Input data	Description	Rel. addr.	Data type	Value range	Default	Unit	CR to module
d **Position control state**	Signals the current state of the internal position control of the BPS 34	0	unsign 8	**0: Init** 1: Idle 2: Measure 4: Standby	**0**	–	–
Input data length: 1 byte							

Note!

These input data signal the state of the BPS 34:

- ***Init****: Base setting during initial startup of the BPS 34*
- ***Idle****: The BPS 34 is in idle state (scanning beam is off, but motor is running)*
- ***Measure****: The BPS 34 is in measurement state (data are output in module 1)*
- ***Standby****: The BPS 34 is in waiting state (laser off and motor off).*

Output data

Output data	Description	Rel. addr.	Data type	Value range	Default	Unit	CR to module
e **Start event**	Event starts position measure-ment	0.0	Bit	0 -> 1: Start	**0**	–	7g
f **Stop event**	Event stops position measure-ment	0.1	Bit	0 -> 1: Stop	**0**	–	–
g **BPS standby**	Switches the BPS 34 to standby operation	0.7	Bit	**0: BPS active** 1: BPS in standby mode	**0**	–	–
Output data length: 1 byte							

Note!

The standby function can only be activated while in "Measure" state. This function switches off the motor and laser. It takes approx. 2 seconds to switch the BPS 34 back on (valid measurement values at the interface).

In "Idle" state, the motor continues to run. Only the laser is switched off. It takes approx. 1 second to switch the BPS 34 back on (valid measurement values at the interface).

If the start-stop event is to occur at the switching input, the "function" parameter must be configured with the "start/stop measurement" parameter in module 7 "Switching input".

8.1.7.10 Module 10: Measurement value acquisition

Description

With this module, a working range on the bar code tape can be defined. The BPS 34 outputs position values within these minimum and maximum limits. Outside of these limits, a position value of zero is output.

Parameters

Parameter	Description	Rel. addr.	Data type	Value range	Default	Unit	CR to module
a **Max. measurement length in [mm]**	Maximum permitted measurement length	0	unsign 32	0 … 2,147,483,647	**10,000,000**	mm	8d
b **Min. measurement length in [mm]**	Minimum permitted measurement length	4	unsign 32	0 … 2,147,483,647	**0**	mm	8d
Parameter length: 8 byte							

Note!

The signal output can be used to indicate that the measured value is outside of the measurement range. To enable this function, the "outside measurement range" or "inside measurement range" parameter must be activated in module 8.

Hex coding of module 10 "Measurement value acquisition"

The value listed in the table shows the hex coding of the default settings.

Internal address of module 10	Max. measurement length address 0	Min. measurement length address 4
04	00 98 96 80	00 00 00 00

Input data

None

Output data

None

8.1.7.11 Module 11: Measurement value preparation

Description

The integration depth parameter is used to specify the number of raw position data which is used for integration in order to determine the position value.

In order to obtain positive or negative position values depending on the direction of movement of the BPS 34, the counting direction can be selected as normal or inverted in the output data of this module.

In order to obtain more exact measurement data while in the static state or for very slow travel speeds, the integration depth can be increased here. If, however, a high integration depth is used for high speeds, the contouring error is increased. With respect to contouring errors and exact measurement data, very good results have been obtained using 8 integration steps. Using 8 integration steps, the integration time is 16 ms. Thus, the BPS 34 delivers a new position value to the interface every 2 ms which is 8 ms old.

Parameters

Parameter	Description	Rel. addr.	Data type	Value range	Default	Unit	CR to module
a **Integration depth**	Number of consecutive scans which are to be used for position determination.	0	unsign 8	4 … 15	**8**	Mea-sure-ments	8d
Parameter length: 2 byte							

Integration depth	Response time [ms]
4	8
5	10
6	12
7	14
8 (default)	16
9	18
10	20
11	22
12	24
13	26
14	28
15	30

Hex coding of module 11 "Measurement value preparation"

The value listed in the table shows the hex coding of the default settings.

Internal address of module 11	Integration depth address 0
05	**00 08**

Input data

None

Output data

Output data	Description	Rel. addr.	Data type	Value range	Default	Unit	CR to module
b **Counting direction**	Counting direction for position calculation	0.0	Bit	**0: Normal** 1: Inverted	**0**	–	–
Output data length: 1 byte							

Note!

The BPS 34 is set as follows by default:

The position value is output with "normal" counting direction. With the "inverted" counting direction, 10,000,000 mm minus the position value is output. This behavior can be influenced using the "Static preset"/"Dynamic preset" modules (module 3 and module 4, respectively) and the "Offset" module (module 5).

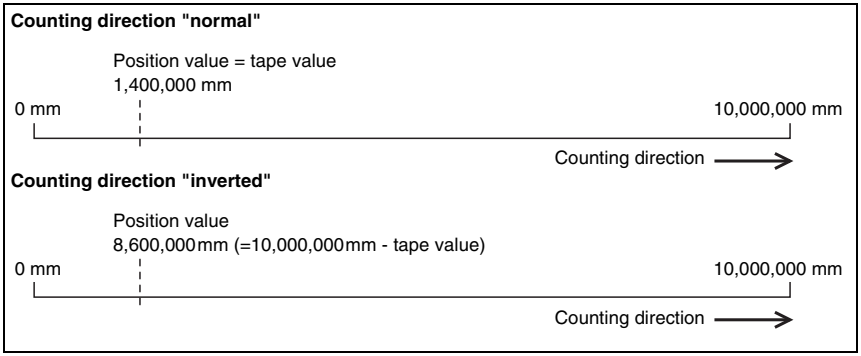

Figure 8.12:Counting direction for position calculation

8.1.7.13 Module 12: Status

Note!

Underlined in the CR column are the modules which must be activated in addition to the current module.

Description

This module supplies various BPS 34 status information to the PROFIBUS master.

Parameters

None

Input data

Input data	Description	Rel. addr.	Data type	Value range	Default	Unit	CR to module
a **Measurement error**	Indicates that no valid integration value could be determined (measurement value preparation module).	0.0	Bit	**0: OK** 1: Error	**0**	–	–
b **Range status**	Indicates that the measurement range has been exceeded (measurement value acquisition module)	0.1	Bit	**0: OK, within measurement range** 1: Measurement range exceeded	**0**	–	10
c **Preset active**	Indicates a position value output with active static preset or dynamic preset (Preset module)	0.2	Bit	**0: No preset active** 1: Preset active	**0**	–	3a 4c
d **Preset teach**	Toggle bit, changes during the teach event for the static and dynamic preset value (Preset module)	0.3	Bit	0.1: Dyn. preset teach	**0**	–	3a 4c
e **Position limit value status 1 (static or dynamic)**	Indicates that limit value 1 has been exceeded (Measurement value monitoring module).	0.4	Bit	**0: No limit value violation** 1: Value greater than limit	**0**	–	14d 16d
f **Position limit value status 2 (static or dynamic)**	Indicates that limit value 2 has been exceeded (Measurement value monitoring module).	0.5	Bit	**0: No limit value violation** 1: Value greater than limit	**0**	–	15d 17d
g **Standby status**	Signals the standby status (Control module)	0.7	Bit	**0: BPS active** 1: BPS in standby mode	**0**	–	9d
Input data length: 1 byte							

Output data

None

8.1.7.14 Module 13: Min./max. position

Note!

Underlined in the CR column are the modules which must be activated in addition to the current module.

Description

The min/max position function monitors the position value and transfers the maximum/minimum value to the PROFIBUS master.

The acquisition time can be adjusted by means of two different modes:

- The "all values" mode detects all values since the start of measurement or since a reset event.
- The "in measurement value window only" mode only detects extreme values which occur in the time period defined in the "MinMax period" parameter.

Parameters

Parameter	Description	Rel. addr.	Data type	Value range	Default	Unit	CR to module
a **MinMax mode**	Parameter activates the min/max evaluation function.	0	unsign 8	**0: Off** 1: All values 2: In measurement value window only	**0**	–	–
b **MinMax period**	Defines the measurement value window for the min-max values.	1	unsign 8	0 … 255	**10**	Mea-sure-ments	–
Parameter length: 2 byte							

Hex coding of module 13 "Min./max. position"

The value listed in the table shows the hex coding of the default settings.

Internal address of module 13	MinMax mode address 0	MinMax period address 1
0C	**00**	**0A**

Input data

Input data	Description	Rel. addr.	Data type	Value range	Default	Unit	CR to module
c **Min. position**	Minimum position for detected period.	0	sign32	-10,000,000 … 10,000,000	**0** **Reset: 2.147.483.647**	Scaled	–
d **Max. position**	Maximum position for detected period.	4	sign32	-10,000,000 … 10,000,000	**0** **Reset: -2.147.483.647**	Scaled	–
Input data length: 8 byte							

Output data

Output data	Description	Rel. addr.	Data type	Value range	Default	Unit	CR to module
e **MinMax reset**	Signal for resetting extreme values	0.0	Bit	0 -> 1: Reset	**0**	–	7
Output data length: 8 byte							

Note!

With "MinMax reset", the input data are reset to 155812h.

With this module, the settings for the Preset (module 3), Offset (module 5) and Scaling (module 6) modules must be taken into account.

ПРОМЭЛЕКТРОНИКА / sales@prom-elec.com

8.1.7.15 Module 14: Static position limit value 1

Description

The limit value function compares the output position value with a position stored during configuration. If the value is above or below the limit value, the limit value status 1 (module 12) is set and, if configured, the switching output (module 8) is appropriately set.

Parameters

Parameter	Description	Rel. addr.	Data type	Value range	Default	Unit	CR to module
a **Limit value mode 1**	Parameter activates the limit value check.	0	unsign 8	**0: Off** 1: On	**0**	–	7g
b **Switching type 1**	Condition for the signal change of the switching output/status bit.	1	unsign 8	**0: Value greater than limit** 1: Value less than limit	**0**	–	8d
c **Hysteresis 1 in [mm]**	Relative offset of the switching point	2	unsign 16	0 … 65,535	**0**	mm	–
d **Limit value 1 in [mm]**	Limit value is compared to the current position value.	4	sign32	-10,000,000 … 10,000,000	**0**	mm	12e
Parameter length: 8 byte							

Hex coding of module 14 "Static position limit value 1"

The value listed in the table shows the hex coding of the default settings.

Internal address of module 14	Limit value mode 1 address 0	Switching type 1 address 1	Hysteresis 1 address 2	Limit value 1 address 4
0D	**00**	**00**	**00 00**	**00 00 00 00**

Input data

None

Output data

None

Note!

With this module, the settings for the Preset (module 3), Offset (module 5) and Scaling (module 6) modules must be taken into account.

8.1.7.16 Module 15: Static position limit value 2

Description

The limit value function compares the output position value with a position stored during configuration. If the value is above or below the limit value, the limit value status 2 (module 12) is set and, if configured, the switching output (module 8) is appropriately set.

Parameters

Parameter	Description	Rel. addr.	Data type	Value range	Default	Unit	CR to module
a **Limit value mode 2**	Parameter activates the limit value check.	0	unsign 8	**0: Off** 1: On	**0**	–	7g
b **Switching type 2**	Condition for the signal change of the switching output/status bit.	1	unsign 8	**0: Value greater than limit** 1: Value less than limit	**0**	–	8d
c **Hysteresis 2 in [mm]**	Relative offset of the switching point	2	unsign 16	0 … 65,535	**0**	mm	–
d **Limit value 2 in [mm]**	Limit value is compared to the current position value.	4	sign32	-10,000,000 … 10,000,000	**0**	mm	12f
Parameter length: 8 byte							

Hex coding of module 15 "Static position limit value 2"

The value listed in the table shows the hex coding of the default settings.

Internal address of module 15	Limit value mode 2 address 0	Switching type 2 address 1	Hysteresis 2 address 2	Limit value 2 address 4
0E	**00**	**00**	**00 00**	**00 00 00 00**

Input data

None

Output data

None

Note!

With this module, the settings for the Preset (module 3), Offset (module 5) and Scaling (module 6) modules must be taken into account.

8.1.7.17 Module 16: Dynamic position limit value 1

Description

The limit value function compares the position value with a stored position. If the value is above or below the limit value, the limit value status 1 in module 12 is set and, if configured, the switching output is appropriately set.

The limit value is transferred to the BPS 34 together with the output data of this module by the PROFIBUS master.

Parameters

Parameter	Description	Rel. addr.	Data type	Value range	Default	Unit	CR to module
a **Limit value mode 1**	Parameter activates the limit value check.	0	unsign 8	**0: Off** 1: On	**0**	–	7g
b **Switching type 1**	Condition for the signal change of the switching output/status bit.	1	unsign 8	**0: Value greater than limit** 1: Value less than limit	**0**	–	8d 12e
c **Hysteresis 1 in [mm]**	Relative offset of the switching point.	2	unsign 16	0 … 65,535	**0**	mm	–
Parameter length: 4 byte							

Hex coding of module 16 "Dynamic position limit value 1"

The value listed in the table shows the hex coding of the default settings.

Internal address of module 16	Limit value mode 1 address 0	Switching type 1 address 1	Hysteresis 1 address 2
0 F	**00**	**00**	**00 00**

Input data

None

Output data

Output data	Description	Rel. addr.	Data type	Value range	Default	Unit	CR to module
d **Limit value 1 in [mm]**	Limit value is compared to the current position value.	0	sign32	-10,000,000 … 10,000,000	**0**	mm	–
Output data length: 4 byte							

Note!

With this module, the settings for the Preset (module 3), Offset (module 5) and Scaling (module 6) modules must be taken into account.

8.1.7.18 Module 17: Dynamic position limit value 2

Description

The limit value function compares the position value with a stored position. If the value is above or below the limit value, the limit value status 2 in module 12 is set and, if configured, the switching output is appropriately set.

The limit value is transferred to the BPS 34 together with the output data of this module by the PROFIBUS master.

Parameters

Parameter	Description	Rel. addr.	Data type	Value range	Default	Unit	CR to module
a **Limit value mode 2**	Parameter activates the limit value check.	0	unsign 8	**0: Off** 1: On	**0**	–	7g
b **Switching type 2**	Condition for the signal change of the switching output/status bit.	1	unsign 8	**0: Value greater than limit** 1: Value less than limit	**0**	–	8d 12f
c **Hysteresis 2 in [mm]**	Relative offset of the switching point.	2	unsign 16	0 … 65,535	**0**	mm	–
Parameter length: 4 byte							

Hex coding of module 17 "Dynamic position limit value 2"

The value listed in the table shows the hex coding of the default settings.

Internal address of module 17	Limit value mode 2 address 0	Switching type 2 address 1	Hysteresis 2 address 2
10	**00**	**00**	**00 00**

Input data

None

Output data

Output data	Description	Rel. addr.	Data type	Value range	Default	Unit	CR to module
d **Limit value 2 in [mm]**	Limit value is compared to the current position value.	0	sign32	-10,000,000 … 10,000,000	**0**	mm	–
Output data length: 4 byte							

Note!

With this module, the settings for the Preset (module 3), Offset (module 5) and Scaling (module 6) modules must be taken into account.

8.1.7.19 Module 18: Measurement error tolerance

Description

The measurement error tolerance function is used to configure a time which results in an extended output of the last position value (module 1) in the event of an error. If the position value changes momentarily to zero, e.g. due to a brief interruption of the laser beam, soiling of the bar code tape or other short-term disturbances, the BPS transmits the last valid position value.

If the error disappears within the configured time, the control notices nothing or only a small change in the position value. The availability of the system is thereby ensured. No new values are delivered by the BPS 34, however, for a period of time extending up to the configured tolerance time. With the "delay error output" parameter, an integration error (corresponds to a missing position value) can be signaled immediately or after the tolerance time has elapsed. If the error persists after the tolerance time has elapsed, a position value of zero is output.

Parameters

Parameter	Description	Rel. addr.	Data type	Value range	Default	Unit	CR to module
a **Position tolerance time in [ms]**	Specifies the time for the output of the last position value following an error	0	unsign 16	0 … 65,535	**50**	ms	–
b **Delay error output**	Delays the output of an integration error by the configured tolerance time.	2	unsign 8	0: No, error delay deactivated **1: Yes, error delay activated**	**1**	–	–
Parameter length: 3 byte							

Hex coding of module 18 "Measurement error tolerance"

The value listed in the table shows the hex coding of the default settings.

Internal address of module 18	Position tolerance time address 0	Delay error output address 2
14	00 32	01

Input data

None

Output data

None

8.1.7.20 Module 19: Service

Description

The "service" function is used to reset the parameter set of the BPS 34 to default settings. This reset only occurs directly in the BPS 34. After the reset function has been activated, the device carries out a reset and is freshly configured on the PROFIBUS. This results in the reactivation of all modules and parameter settings selected in the PROFIBUS project.

Parameters

None

Input data

Input data	Description	Rel. addr.	Data type	Value range	Default	Unit	CR to module
a **Status byte**	Shows the state of the reset to factory settings.	0	unsign 8	**0x00: Not active or successfully concluded** 0xFF: Reset active 0xF1: EEPROM access error	**0x00**	–	–
Input data length: 1 byte							

Output data

Output data	Description	Rel. addr.	Data type	Value range	Default	Unit	CR to module
b **Factory settings**	Reset of parameters to factory settings.	0.0	Bit	0 -> 1: Reset the parameters **1 -> 0: Normal operation**	**0**	–	–
Output data length: 1 byte							

Note!

The preset function (module 3) must be retaught following a reset.

8.1.7.21 Module 20: Speed

Note!

Underlined in the CR column are the modules which must be activated in addition to the current module.

Description

Outputs the current speed with the configured resolution and the desired scaling factor. In order for the speed to be calculated in the BPS 34 and output in this module, module 22 (Control speed measurement) must also be activated in the PROFIBUS project.

Parameters

None

Input data

Input data	Description	Rel. addr.	Data type	Value range	Default	Unit	CR to module
a **Speed**	Current speed	0	unsign 32	0 … 10,000,000	**0**	Scaled	22
Input data length: 4 byte							

Note!

The scaling of the position value has no effect on the scaling or output of the speed.

The direction of movement of the BPS 34 is displayed in module 23 "Speed measurement status" (see Page 84) under h *"Direction of movement".*

Output data

None

8.1.7.22 Module 21: Speed parameters

Description

The speed parameter influences the fundamental method of operation and output of the speed measurement. The resolution, scaling, integration depth and fault tolerance for the speed measurement can be defined.

The resolution function defines the resolution for the speed value (module 20). The scaling function allows the speed values to be converted to any unit of measurement. To do this, the speed value (module 20) is multiplied by the scaling factor. The speed integration depth parameter averages the selected number of speed values to produce the speed output in module 20.

The speed tolerance time function is used to configure a time which results in an extended output of the last speed (module 20) in the event of an error. If the speed could not be calculated momentarily, e.g. due to a brief interruption of the scanning beam, soiling of the bar code tape or other short-term disturbances, the BPS transmits the last valid speed. If the error disappears within the configured time, the control notices nothing or only a small change in the speed value. The availability of the system is thereby ensured.

The "delay speed error output" parameter can be used to signal a speed error with bit 0.0 either immediately or after the speed tolerance time in module 23 has elapsed. If the error persists after the tolerance time has elapsed, a speed value of zero is output.

Parameters

Parameter	Description	Rel. addr.	Data type	Value range	Default	Unit	CR to module
a **Speed resolution in [mm/s]**	The parameter specifies the resolution for the speed value.	0	unsign 8	**3: 1** 4: 10 5: 100 6: 1,000	**3**	mm/s	20a
b **Speed scaling factor in [‰]**	Scaling factor used to convert the speed	1	unsign 16	0 … 65,535	**1,000**	Per thousand	
c **Speed integration depth**	Number of consecutive measurements which are to be used for speed determination. Specified here is the response time (see table on Page 81).	3	unsign 8	2 … 128	**8**	ms	
d **Speed tolerance time in [ms]**	Specifies the time for the display of the last speed following an error.	4	unsign 16	0 … 65,535	**50**	ms	
e **Delay speed error output**	Delays the output of a speed error by the configured tolerance time.	6	unsign 8	0: No, error delay deactivated 1: Yes, error delay activated	**1**	–	23a
Parameter length: 7 byte							

Speed integration depth	Response time [ms]
1	2
2	4
3	6
4 (default)	8
5	10
:	:
63	126
64	128

Hex coding of module 21 "Speed parameters"

The value listed in the table shows the hex coding of the default settings.

Internal address of module 21	Speed resolution address 0	Speed scaling factor address 1	Speed integration depth address 3	Speed tolerance time address 4	Delay speed error output address 6
17	**03**	**03 E8**	**08**	**00 32**	**01**

Input data

None

Output data

None

8.1.7.23 Module 22: Speed measurement control

Description

The control manages the timing of the speed measurement by starting or stopping the measurement function. Control is performed depending on certain events such as the switching input, time functions or PROFIBUS output bits. Using parameters, it determines the events which influence the states.

Parameters

Parameter	Description	Rel. addr.	Data type	Value range	Default	Unit	CR to module
a **Speed measure-ment start mode**	The start mode determines by which event the speed mea-surement is started.	0	unsign 8	**0: Deactivated** 1: After initialization 2: Following event: Either by the switching input or by a signal from the PROFIBUS master	**0**	–	7g
b **Speed measure-ment stop mode**	The stop mode determines after which event the speed measurement is stopped.	1	unsign 8	**0: Deactivated** 1: By errors 2: By a stop event: Either by output bit 0.1 or by the switching input function	**0**	–	7g
Parameter length: 2 byte							

Hex coding of module 22 "Speed measurement control"

The value listed in the table shows the hex coding of the default settings.

Internal address of module 22	Speed measurement start mode address 0	Speed measurement stop mode address 1
18	**00**	**00**

Input data

Input data	Description	Rel. addr.	Data type	Value range	Default	Unit	CR to module
c **State**	Signals the current state of the internal speed measurement of the BPS 34.	0	unsign 8	**0: Init** 1: Idle 2: Measure 4: Standby	**0**	–	–
Input data length: 1 byte							

Note!

These input data signal the state of the BPS 34:

- ***Init**: Base setting during initial startup of the BPS 34*
- ***Idle**: The BPS 34 is in idle state (scanning beam is off, but motor is running)*
- ***Measure**: The BPS 34 is in measurement state (data are output in module 1)*
- ***Standby**: The BPS 34 is in waiting state (laser off and motor off).*

Output data

Output data	Description	Rel. addr.	Data type	Value range	Default	Unit	CR to module
d **Start event**	Event starts speed measurement.	0.0	Bit	0 -> 1: Start	**0**	–	–
e **Stop event**	Event stops speed measurement.	0.1	Bit	0 -> 1: Stop	**0**	–	–
f **Min./max. speed mode**	Defines whether the current speed is included in the min./max. recording.	0.2	Bit	**0: Do not record min./max.** 1: Record min./max.	**0**	–	24
g **Min./max. speed reset**	Reset the min./max. speed values.	0.3	Bit	0 -> 1: Reset	**0**	–	24
Output data length: 1 byte							

8.1.7.24 Module 23: Speed measurement status

Description

This module supplies various status information regarding the speed measurement of the BPS 34 to the PROFIBUS master.

Parameters

None

Input data

Input data	Description	Rel. addr.	Data type	Value range	Default	Unit	CR to module
a **Speed measure-ment error**	Signals that no valid speed could be ascertained.	0.0	Bit	**0: OK** 1: Error	**0**	–	21
b **Speed limit value status 1**	Signals that the speed limit value 1 has been exceeded.	0.1	Bit	**0: No limit value violation** 1: Value greater than limit	**0**	–	25a
c **Speed limit value status 2**	Signals that the speed limit value 2 has been exceeded.	0.2	Bit	**0: No limit value violation** 1: Value greater than limit	**0**	–	25a
d **Speed limit value status 3**	Signals that the speed limit value 3 has been exceeded.	0.3	Bit	**0: No limit value violation** 1: Value greater than limit	**0**	–	25a
e **Speed limit value status 4**	Signals that the speed limit value 4 has been exceeded.	0.4	Bit	**0: No limit value violation** 1: Value greater than limit	**0**	–	25a
f **Dyn. speed limit value status**	Signals that the dynamic speed limit value has been exceeded.	0.5	Bit	**0: No limit value violation** 1: Value greater than limit	**0**	–	26b
g **Movement status**	Signals whether a movement is currently being detected.	0.6	Bit	**0: No movement** 1: Movement	**0**	–	–
h **Direction of move-ment**	If bit 6 is set, the direction of movement can be read here.	0.7	Bit	**0: Direction - tape start** 1: Direction - tape end	**0**	–	–
i **Speed limit value status 1**	Signals whether the current speed is compared with this limit value.	1.1	Bit	**0: Comparison not active** 1: Comparison active	**0**	–	25a
j **Speed limit value status 2**	Signals whether the current speed is compared with this limit value.	1.2	Bit	**0: Comparison not active** 1: Comparison active	**0**	–	25a
k **Speed limit value status 3**	Signals whether the current speed is compared with this limit value.	1.3	Bit	**0: Comparison not active** 1: Comparison active	**0**	–	25a

l **Speed limit value status 4**	Signals whether the current speed is compared with this limit value.	1.4	Bit	**0: Comparison not active** 1: Comparison active	**0**	–	25a
m **Dyn. speed limit value status**	Signals whether the current speed is compared with this limit value.	1.5	Bit	**0: Comparison not active** 1: Comparison active	**0**	–	26a
Input data length: 2 byte							

Note!

The movement status g is displayed for speeds from 0.01 m/s.

Attention!

The "Dynamic preset" module (module 4), the "MVS label" function and the "error tolerance time" can be used to activate the a ... f messages of the input data. Depending on the configuration, these may be normal states.

Output data

None

8.1.7.25 Module 24: Min./max. speed

Description

The min./max. speed function monitors the speed value and transfers the maximum and minimum value to the PROFIBUS master. Recording can be controlled via module 22 "Speed measurement control". It is also possible to reset values to the initialization value via module 22.

Parameters

None

Input data

Input data	Description	Rel. addr.	Data type	Value range	Default	Unit	CR to module
a **Min. speed**	Minimum speed for detected period.	0	unsign 32	0 … 10,000,000	**0**	Scaled	22
b **Max. speed**	Maximum speed for detected period.	4	unsign 32	0 … 10,000,000	**0**	Scaled	
Input data length: 8 byte							

Output data

None

8.1.7.26 Module 25: Dynamic speed limit value

Note!

Underlined in the CR column are the modules which must be activated in addition to the current module.

Description

The limit value function compares the current speed with a limit speed stored in the configuration. This occurs in the range defined by the range start and end. If a direction-dependent limit value check is activated via the direction selection parameter, the values of range start and range end define the direction. The check is always performed from range start to range end. For example, if the range start is "5500" and the range end is "5000", the direction-dependent check is only performed in the direction from "5500" to "5000". If the check is independent of direction, the order of range start and end is without meaning. If the value is above or below the limit value, the limit value status in module 23 is set and, if configured, the switching output is appropriately set.

Parameters

Parameter	Description	Rel. addr.	Data type	Value range	Default	Unit	CR to module
a **Speed limit value mode**	Parameter activates or deactivates limit value check for Speed limit value 1, Speed limit value 2, Speed limit value 3, Speed limit value 4 .	 0.0 0.1 0.2 0.3	Bits	For each limit value **0: Limit value not active** 1: Limit value activated	 **0** **0** **0** **0**	–	8b 22
b **Direction selection**	Selection of direction-dependent or direction-independent limit value check for Speed limit value 1, Speed limit value 2, Speed limit value 3, Speed limit value 4	 0.4 0.5 0.6 0.7	Bits	For each limit value **0: Check in both directions** 1: Only check in one direction	 **0** **0** **0** **0**	–	
c **Switching type**	Condition for the signal change of the switching output and the status bits for Speed limit value 1, Speed limit value 2, Speed limit value 3, Speed limit value 4	 1.0 1.1 1.2 1.3	Bits	For each limit value **0: Value greater than limit** 1: Value less than limit	 **0** **0** **0** **0**	–	
d **Speed limit value 1 in [mm/s]**	Limit value is compared to the current speed.	2	unsign 16	0 … 20,000	**0**	mm/s	23b
e **Speed hysteresis 1 in [mm/s]**	Relative offset of the switching point.	4	unsign 16	0 … 20,000	**0**	mm/s	

f **Range start limit value 1 in [mm]**	The speed limit value is monitored starting from this position.	6	sign32	-10,000,000 … 10,000,000	**0**	mm	23b
g **Range end limit value 1 in [mm]**	The speed limit value is monitored up to this position.	10	sign32	-10,000,000 … 10,000,000	**0**	mm	
h **Speed limit value 2 in [mm/s]**	Limit value is compared to the current speed.	14	unsign 16	0 … 20,000	**0**	mm/s	23c
i **Speed hysteresis 2 in [mm/s]**	Relative offset of the switching point.	16	unsign 16	0 … 20,000	**0**	mm/s	
j **Range start limit value 2 in [mm]**	The speed limit value is monitored starting from this position.	18	sign32	-10,000,000 … 10,000,000	**0**	mm	
k **Range end limit value 2 in [mm]**	The speed limit value is monitored up to this position.	22	sign32	-10,000,000 … 10,000,000	**0**	mm	
l **Speed limit value 3 in [mm/s]**	Limit value is compared to the current speed.	26	unsign 16	0 … 20,000	**0**	mm/s	23d
m **Speed hysteresis 3 in [mm/s]**	Relative offset of the switching point.	28	unsign 16	0 … 20,000	**0**	mm/s	
n **Range start limit value 3 in [mm]**	The speed limit value is monitored starting from this position.	30	sign32	-10,000,000 … 10,000,000	**0**	mm	
o **Range end limit value 3 in [mm]**	The speed limit value is monitored up to this position.	34	sign32	-10,000,000 … 10,000,000	**0**	mm	
p **Speed limit value 4 in [mm/s]**	Limit value is compared to the current speed.	38	unsign 16	0 … 20,000	**0**	mm/s	23e
q **Speed hysteresis 4 in [mm/s]**	Relative offset of the switching point.	40	unsign 16	0 … 20,000	**0**	mm/s	
r **Range start limit value 4 in [mm]**	The speed limit value is monitored starting from this position.	42	sign32	-10,000,000 … 10,000,000	**0**	mm	23e
s **Range end limit value 4 in [mm]**	The speed limit value is monitored up to this position.	46	sign32	-10,000,000 … 10,000,000	**0**	mm	

Parameter length: 50 byte

Hex coding of module 25 "Static speed limit values"

The value listed in the table shows the hex coding of the default settings.

Internal address of module 25	Speed limit value mode address 0	Direction selection address 0	Switching type address 1	Speed limit value 1 address 2	Speed hysteresis 1 address 4	Range start limit value 1 address 6	Range end limit value 1 address 10
1B	00	00	00	00 00	00 00	00 00 00 00	00 00 00 00

Speed limit value 2 address 14	Speed hysteresis 2 address 16	Range start limit value 2 address 18	Range end limit value 2 address 22	Speed limit value 3 address 26	Speed hysteresis 3 address 28	Range start limit value 3 address 30	Range end limit value 3 address 34
00 00	00 00	00 00 00 00	00 00 00 00	00 00	00 00	00 00 00 00	00 00 00 00

Speed limit value 4 address 38	Speed hysteresis 4 address 40	Range start limit value 4 address 42	Range end limit value 4 address 46
00 00	00 00	00 00 00 00	00 00 00 00

Input data

None

Output data

None

8.1.7.27 Module 26: Dynamic speed limit value

Note!

Underlined in the CR column are the modules which must be activated in addition to the current module.

Description

The speed limit value function compares the current speed with a stored speed within the defined range. If the value is above or below the limit value, the dynamic limit value status in module 23 is set and, if configured, the switching output is appropriately set. Limit value, hysteresis, range start and range end are transferred with the output data of this module by the PROFIBUS master. The transferred values are activated by bit 0.0, i.e. if this bit is set, the BPS 34 compares the current speed with the new limit value conditions.

Parameters

None

Input data

None

Output data

Output data	Description	Rel. addr.	Data type	Value range	Default	Unit	CR to module
a **Limit value control**	Controls internal processing of the transferred dynamic limit value parameters.	0.0	Bit	**0: Do not process** 1: Parameter now valid / process	**0**	–	8d 22 23f 23 m
b **Switching type**	Condition for the signal change of the switching output and the status bit for dynamic speed limit value.	0.1	Bit	**0: Value greater than limit** 1: Value less than limit	**0**	–	
c **Direction selection**	Selection of direction-dependent or direction-independent limit value check for dynamic speed limit value.	0.2	Bits	**0: Check in both directions** 1: Only check in one direction	**0**	–	
d **Dyn. speed limit value in [mm/s]**	Limit value is compared to the current speed.	1	unsign 16	0 … 20,000	**0**	mm/s	
e **Dyn. speed hysteresis in [mm/s]**	Relative offset of the switching point.	3	unsign 16	0 … 20,000	**0**	mm/s	
f **Range start dyn. limit value in [mm]**	The dynamic speed limit value is monitored starting from this position.	5	sign32	-10,000,000 … 10,000,000	**0**	mm	8d 22 23f 23 m
g **Range end dyn. limit value in [mm]**	The dynamic speed limit value is monitored up to this position.	9	sign32	-10,000,000 … 10,000,000	**0**	mm	
Output data length: 13 byte							

8.1.7.28 Module 27: Tape value correction

Description

The tape value correction function can be used to correct the length deviation of the bar code tape length from the actual tape length (calibration) which results from the production process. For this purpose, a suitable measuring device must be used to determine the actual length of one meter of bar code tape (as printed). If, for example, one meter of tape has an absolute value of 1001.4 millimeters, the value 10014 is entered in the "real length" parameter of this module. The real length is specified with a resolution of 0.1 millimeters. To use the exact resolution, it is useful to measure a longer section of bar code tape and convert the deviation to a length of one meter.

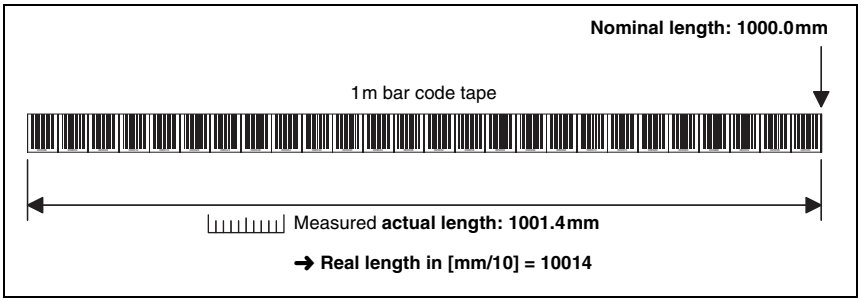

Figure 8.29:Tape value correction

The "range start" parameter must be configured according to the real starting value of the used bar code tape. If several different bar code tapes are connected to one another in sequence, the "range end" of the corrected tape section must also be entered. The entire bar code tape is corrected with the default value of 10,000,000 for the range end.

Parameters

Parameter	Description	Rel. addr.	Data type	Value range	Default	Unit	CR to module
a **Real length in [mm/10]**	Specifies the real (calibrated) length of one meter of bar code tape (as printed).	0	unsign 16	0 … 65,535	**10,000**	mm/10	1
b **Range start in [mm]**	The tape value is corrected with the real length starting from this position.	2	sign32	0 … 10,000,000	**0**	mm	–
c **Range end in [mm]**	The tape value is corrected with the real length up to this position.	6	sign32	0 … 10,000,000	**10,000,000**	mm	–
Parameter length: 10 byte							

Hex coding of module 27 "Tape value correction"

The value listed in the table shows the hex coding of the default settings.

Internal address of module 27	Real length address 0	Range start address 2	Range end address 6
1D	27 10	00 00 00 00	00 98 96 80

Input data

None

Output data

None

9 Diagnostics and troubleshooting

9.1 General causes of errors

Error	Possible error causes	Measures
LED MS 34 10x = "off"	• No supply voltage connected to the device. • Device not yet recognized by the PROFIBUS. Note: The LED remains off until the BPS 34 is recognized by the PROFIBUS. Only after the PROFIBUS has addressed the BPS 34 for the first time, the following state descriptions apply.	❑ Check supply voltage. ❑ Check PROFIBUS settings.
LED MS 34 10x = "flashes red"	• Error on the PROFIBUS.	❑ Reset device (switch voltage on/off).
LED MS 34 10x = "Red, continuous light" (no communication via PROFIBUS)	• Incorrect wiring. • Wrong termination. • Incorrect PROFIBUS address set. • PROFIBUS deactivated. • Incorrect configuration. • Parameter memory overflow in the control.	❑ Check wiring. ❑ Check termination. ❑ Check PROFIBUS address. ❑ Activate PROFIBUS interface. ❑ Check configuration of the device in the configuration tool. ❑ Reduce number of modules.
LED MS 34 10x = "Orange, continuous light"	• Service operation active.	❑ Set the service switch in MSD 1 101 to "Operation".
Position error	• No bar code tape exists. • Scanner positioned in total reflection • Scanner not properly mounted	❑ Check positioning of bar code tape. ❑ Change the angle of the scanning beam by tilting the BPS 34. ❑ Check mounting.

9.2 Error on the PROFIBUS

Error	Possible error causes	Measures
Sporadic errors on the PROFIBUS	• Incorrect wiring • Wrong termination • Electromagnetic influences • Overall network expansion exceeded	❑ Check wiring. ❑ Check termination. ❑ Check shielding. ❑ Check grounding concept and connection to FE. ❑ Check max. network expansion as a function of the set baud rate.

Note!

Please use ***the Page 93 and Page 94 as a master copy*** *should servicing be required. Cross the items in the "Measures" column which you have already examined, fill out the following address field and fax both pages together with your service contract to the fax number listed below.*

Customer data (please complete) Leuze service fax number: **+49 7021 573-199**

Device type:	
Company:	
Contact person/department:	
Phone (direct dial):	
Fax:	
Street / no.:	
ZIP code / City:	
Country:	

10 Type overview and accessories

10.1 Type overview: BPS 34

Part no.	Type designation	Comment
50038007	BPS 34 S M 100	PROFIBUS DP interface, UL approval
50038008	BPS 34 S M 100 H	PROFIBUS DP interface and heating, **no** UL approval
50103179	BPS 34 S M 100 HT	PROFIBUS DP interface, max. temp up to 50°C, **no** UL approval

10.2 Accessories - Modular connector hoods

Part no.	Type designation	Comment
50037230	MS 34 103	Modular connector hood for BPS 34 with three M12 connectors
50037231	MS 34 105	Modular connector hood for BPS 34 with five M12 connectors

10.3 Accessories - Modular service display

Part no.	Type designation	Comment
50037232	MSD 1 101	Modular Service Display for BPS 34
50037543	KB 034-2000	Interconnection cable MS 34 105 to MSD 1 101

10.4 Accessories - Termination

Part no.	Type designation	Comment
50038539	TS 02-4-SA	M12 connector with integrated terminating resistor for DP OUT (B-coded)

10.5 Accessories – Connectors

Part no.	Type designation	Comment
50038538	KD 02-5-BA	M12 socket connector for DP IN (B-coded)
50038537	KD 02-5-SA	M12 plug connector for DP OUT (B-coded)
50020501	KD 095-5A	M12 connector for voltage supply (A-coded)

10.6 Accessories – Mounting device

Part no.	Type designation	Comment
50027375	BT 56	Mounting device with dovetail and rod

10.7 Accessories - Ready-made cables for voltage supply

10.7.1 Contact assignment of PWR IN connection cable

PWR connection cable (5-pin socket, A-coded)			
PWR IN 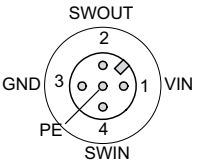 **M12 socket (A-coded)**	**Pin**	**Name**	**Core color**
	1	VIN	**Brown**
	2	SWOUT	**White**
	3	GND	**Blue**
	4	SWIN	**Black**
	5	PE	**Gray**
	Thread	PE	**Bare**

10.7.2 Technical data of voltage supply cable

Operating temperature range	In idle state: -30°C … +70°C
	In motion: -5°C … +70°C
Material	Sheathing: PVC
Bending radius	> 50 mm

10.7.3 Order codes for voltage supply cables

Part no.	Type designation	Comment
50104557	K-D M12A-5P-5m-PVC	M12 socket for PWR IN, axial plug outlet, open cable end, cable length 5m
50104559	K-D M12A-5P-10m-PVC	M12 socket for PWR IN, axial plug outlet, open cable end, cable length 10m

10.8 Accessories - Ready-made cables for PROFIBUS connection

10.8.1 General

- Cable **KB PB…** for connecting to the DP IN/DP OUT M12 connector
- Standard cables available in lengths from 2 … 30m
- Special cables on request.

10.8.2 Contact assignment for PROFIBUS connection cable KB PB…

PROFIBUS connection cable (5-pin socket/connector, B-coded)			
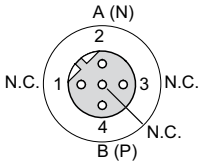 **M12 socket (B-coded)**	**Pin**	**Name**	**Core color**
	1	N.C.	–
	2	A (N)	**Green**
	3	N.C.	–
	4	B (P)	**Red**
	5	N.C.	–
	Thread	FE	**Bare**
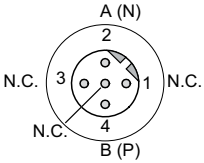 **M12 plug (B-coded)**			

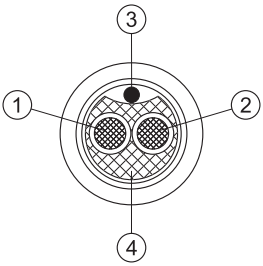

1 Conductor with insulation **red**
2 Conductor with insulation **green**
3 Drain wire
4 Fibrous fleece

Bild 10.1: Cable structure of PROFIBUS connection cable

10.8.3 Technical data of PROFIBUS connection cable

Operating temperature range	In idle state: -40°C … +80°C
	In motion: -5°C … +80°C
Material	The cables fulfill the PROFIBUS requirements,
	Free of halogens, silicone and PVC
Bending radius	> 80mm, suitable for drag chains

10.8.4 Order codes for PROFIBUS connection cables

Part no.	Type designation	Comment
50104181	KB PB-2000-BA	M12 socket for DP IN, axial plug outlet, open cable end, cable length 2m
50104180	KB PB-5000-BA	M12 socket for DP IN, axial plug outlet, open cable end, cable length 5m
50104179	KB PB-10000-BA	M12 socket for DP IN, axial plug outlet, open cable end, cable length 10m
50104178	KB PB-15000-BA	M12 socket for DP IN, axial plug outlet, open cable end, cable length 15m
50104177	KB PB-20000-BA	M12 socket for DP IN, axial plug outlet, open cable end, cable length 20m
50104176	KB PB-25000-BA	M12 socket for DP IN, axial plug outlet, open cable end, cable length 25m
50104175	KB PB-30000-BA	M12 socket for DP IN, axial plug outlet, open cable end, cable length 30m
50104188	KB PB-2000-SA	M12 plug for DP OUT, axial plug outlet, open cable end, cable length 2m
50104187	KB PB-5000-SA	M12 plug for DP OUT, axial plug outlet, open cable end, cable length 5m
50104186	KB PB-10000-SA	M12 plug for DP OUT, axial plug outlet, open cable end, cable length 10m
50104185	KB PB-15000-SA	M12 plug for DP OUT, axial plug outlet, open cable end, cable length 15m
50104184	KB PB-20000-SA	M12 plug for DP OUT, axial plug outlet, open cable end, cable length 20m
50104183	KB PB-25000-SA	M12 plug for DP OUT, axial plug outlet, open cable end, cable length 25m
50104182	KB PB-30000-SA	M12 plug for DP OUT, axial plug outlet, open cable end, cable length 30m
50104096	KB PB-1000-SBA	M12 plug, M12 socket for PROFIBUS, axial plug outlets, cable length 1m
50104097	KB PB-2000-SBA	M12 plug, M12 socket for PROFIBUS, axial plug outlets, cable length 2m
50104098	KB PB-5000-SBA	M12 plug, M12 socket for PROFIBUS, axial plug outlets, cable length 5m
50104099	KB PB-10000-SBA	M12 plug, M12 socket for PROFIBUS, axial plug outlets, cable length 10m
50104100	KB PB-15000-SBA	M12 plug, M12 socket for PROFIBUS, axial plug outlets, cable length 15m
50104101	KB PB-20000-SBA	M12 plug, M12 socket for PROFIBUS, axial plug outlets, cable length 20m
50104174	KB PB-25000-SBA	M12 plug, M12 socket for PROFIBUS, axial plug outlets, cable length 25m
50104173	KB PB-30000-SBA	M12 plug, M12 socket for PROFIBUS, axial plug outlets, cable length 30m

10.9 Type overview: Bar code tape

Part no.	Type designation	Comment
50038895	BCB 005	Bar code tape, 5m length
50040041	BCB 010	Bar code tape, 10m length
50037489	BCB 020	Bar code tape, 20m length
50037491	BCB 030	Bar code tape, 30m length
50037492	BCB 040	Bar code tape, 40m length
50038894	BCB 050	Bar code tape, 50m length
50038893	BCB 060	Bar code tape, 60m length
50038892	BCB 070	Bar code tape, 70m length
50038891	BCB 080	Bar code tape, 80m length
50038890	BCB 090	Bar code tape, 90m length
50037493	BCB 100	Bar code tape, 100m length
50040042	BCB 110	Bar code tape, 110m length
50040043	BCB 120	Bar code tape, 120m length

50040044	BCB 130	Bar code tape, 130m length
50040045	BCB 140	Bar code tape, 140m length
50040046	BCB 150	Bar code tape, 150m length
50037494	BCB 200	Bar code tape, 200m length
50037495	BCB / special lengths starting at 150m	Bar code tape with special length and special height
50102600	BCB special length 25mm high	Bar code tape special length 25mm high

11 Maintenance

11.1 General maintenance information

Usually, the BPS 34 does not require any maintenance by the operator.

In the event of dust build-up, clean the optical window with a soft cloth; use a cleaning agent (commercially available glass cleaner) if necessary.

Also check the bar code tape for possible soiling.

Attention!

Do not use solvents and cleaning agents containing acetone. Use of improper cleaning agents can damage the optical window.

11.2 Repairs, servicing

Repairs to the device must only be carried out by the manufacturer.

↳ Contact your Leuze distributor or service organization should repairs be required. The addresses can be found on the inside of the cover and on the back.

Note!

When sending devices to Leuze electronic for repair, please provide an accurate description of the error.

11.3 Disassembling, packing, disposing

Repacking

For later reuse, the device is to be packed so that it is protected.

Note!

Electrical scrap is a special waste product! Observe the locally applicable regulations regarding disposal of the product.

12 Appendix

12.1 EC Declaration of Conformity

Leuze electronic

EG-Konformitätserklärung
EC-Declaration of conformity

Hersteller:
Manufacturer:

Leuze electronic GmbH + Co KG
In der Braike 1
73277 Owen / Teck
Deutschland

erklärt, unter alleiniger Verantwortung, dass die folgenden Produkte:
declares under its sole responsibility, that the following products:

Gerätebeschreibung:
Description of Product:

BPS 34 + MS 34

folgende Richtlinien und Normen entsprechen.
are in conformity with the standards an directives:

Zutreffende EG-Richtlinien:
Applied EC-Directive:

89/336/EWG	EMV-Richtlinie
73/23/EWG	Niederspannungs-Richtlinie

Angewandte harmonisierte Normen:
Applied harmonized standards:

EN 61000-6-2:2001	EMV Fachgrundnormen Störfestigkeit Industrie
EN 61000-6-3:2001	EMV-Fachgrundnormen Störaussendung Mischgebiete

EN 55022:1998 + A1:2000 + A2:2003	EMV-Funkstöreigenschaften ITE-Produkte
EN 55024:1998 + A1:2001 + A2:2003	EMV-Störfestigkeit, ITE-Produkte
EN 61000-4-2:1995 + A1:1998 + A2:2001	Entladung statischer Elektrizität (ESD)
EN 61000-4-3:2002 + A1:2002	Hochfrequente elektromagnetischer Felder
EN 61000-4-4:1995 + A1:2001 + A2:2001	Schnelle transiente elektr. Störgrößen (Brust)
EN 61000-4-6:2002	Leitungsgeführte Störgrößen
EN 60825-1:1994 + A1:2002 + A2:2001	Sicherheit von Lasereinrichtungen

Leuze electronic GmbH + Co KG
Postfach 11 11
In der Braike 1
73277 Owen / Teck
Deutschland

Owen, den 9.12.05

Michael Heyne (Geschäftsführer)
(managing director)

Reg.-Nr. 3922 02

Leuze electronic GmbH + Co KG
in der Braike 1
D-73277 Owen-Teck
Telefon (0 70 21) 57 30
Telefax (0 70 21) 57 31 99
http://www.leuze.de
info@leuze.de

Die Gesellschaft ist eine Kommanditgesellschaft
mit Sitz in Owen. Registergericht Kirchheim-Teck, HRA 712
Persönlich haftende Gesellschafterin ist die
Leuze-electronic Geschäftsführungs-GmbH mit Sitz in Owen
Registergericht Kirchheim-Teck, HRB 550
Geschäftsführer: Michael Heyne (Sprecher), Dr. Harald Grübel
Vorsitzender des Verwaltungsrats: Meinert Hahnemann

Deutsche Bank AG Stuttgart 13 33 624 (BLZ 600 700 70)
Volksbank Kirchheim-Nürtingen 310 800 005 (BLZ 612 901 20)
Kreissparkasse Esslingen-Nürtingen 10 399 220 (BLZ 611 500 20)
Postgiro Stuttgart 0 014 890 702 (BLZ 600 100 70)

Steuer-Nr. 69026 / 10630
USt.-IdNr. DE 145912521

A

Absolute measurement accuracy 31
Accessories 23, 95
Connector 95
Modular connector hoods 95
Modular service display 95
Mounting device 95
Ready-made cable 96, 97
Termination 95
Actual length 91
Air pockets 31
Angle of inclination 9, 40

B

Bar code tape 28
Cut mark 30
Defective 36
Repair kit 36
Type overview 98
Wrapping direction 28
Beam exit 9, 41
Bias level 62
Bonding surface 31
BPS Configuration Tool 26
Bus address 11, 46
Bus termination 20

C

Cable
PROFIBUS connection 97
Voltage supply 96
Calibration 91
Caps 18, 19, 20, 44
Causes of errors 93
Cleaning 17
Cleaning agents 100
Configuration tool 46
Connection 17
Accessories 23
Functional earth PE 19
Modular service display 13
MSD 1 101 27
PROFIBUS 11, 43
Switching input 12
Switching output 12
Voltage supply 10
Connection unit 23
Connector hood 23
Control bar code 33
MVS 34
Positioning 34
Structure 33
Counting direction 69
cUL 3
Curves 31
Cut mark 30

D

Debounce time 60
Declaration of Conformity 3, 101
Default settings 78
Degree of protection 18, 19, 20, 44
Description of functions 8
Device arrangement 9, 41
Device parameter 43
Diagnostics 93
Dimensioned drawing
Connection unit 24
Modular service display 27
MS 34 103 24
MS 34 105 24
MSD 1 101 27
Dimensioned drawings
BPS 34 15
MS 34 103 16
MS 34 105 16
Direction of movement 67
Disassembling 100
Disposing 100
Double insulation 17
Download
GSD file 46
DP IN 20, 44
DP OUT 20, 44
Dust 100

E

EC Declaration of Conformity 101
Electrical connection 17
Error
on the PROFIBUS 93
Error case 77

Error output 77
Expansion joints 31

F

Factory settings 78
Fast commissioning 8
Fastening grooves 38
Faults 17

G

Gap 30
GSD file 43, 46
GSD modules
  Overview 48
  Structure 47

H

Heating
  Integrated 19, 42

I

Input data 43
Integrated heating 42
Integration depth 67, 80
Integration error 77
Integration time 81
Interface
  PROFIBUS 43

L

LED states 25
Length deviation 91
Limit speed 87
Limit value 73, 74, 75, 76, 87
Limit values 70

M

Maintenance 100
Max. speed 86
Measurement error 70
Measurement error tolerance 77
Measurement length 66
Measurement start mode 64
  Speed 82
Measurement stop mode 64
  Speed 82
Measurement value switching 34
Min. speed 86
Modular connector hood
  MS 34 103 23
Modular service display 26
Module
  Control 64
  Dynamic position limit value 1 75
  Dynamic position limit value 2 76
  Dynamic preset 56
  Dynamic speed limit value 89
  Measurement error tolerance 77
  Measurement value acquisition 66
  Measurement value preparation 67
  Min./max. speed 86
  Min/max position 71
  Offset value 57
  Position value 52
  Resolution 53
  Scaling 58
  Service 78
  Speed 79
  Speed measurement control 82
  Speed measurement status 84
  Speed parameters 80
  Static position limit value 1 73
  Static position limit value 2 74
  Static preset 54
  Static speed limit values 87
  Status 70
  Switching input 60
  Switching output 62
  Tape value correction 91
Modules 48
Mounting 38
  Angle of inclination 40
  Bar code tape 8, 30, 42
  BPS 34 38
  BT 56 38
  Device 8
  Mounting device 38
  Outdoors 42
Mounting device
  BT 56 38
Mounting example 40

Mounting location 41
Moving system 9
MS 34 103 23
MSD 1 101 26
MVS 34

N

Name plate 17
Nominal length 91

O

Optical window 100
Order codes
  PROFIBUS connection cable 98
  Voltage supply cable 96
Output data 43
Overview
  Modules 48

P

Packaging 100
Parameter memory 26
Pin assignment 18
Position limit value 73, 74, 75, 76
Position value 52
Positioning
  Control bar code 34
Power supply unit 17
Preset value 54, 56
PROFIBUS 43
  Address 46
  Communication 25
  DP 43
  Error 93
  GSD file 43
  Incoming 20, 44
  Outgoing 20, 44
  Project 26
PROFIBUS address 11
PROFIBUS manager 12
Protective conductor 17
Protective housing 42
Pulse duration 60, 62
PWR IN 19

Q

Quality assurance 3

R

Range end 91
Range start 91
Reading field
  Curve 22
  Reading distance 22
  Width 22
  Working range 22
Real length 91
Repair 100
Repair kit 36
Reset 78
Resolution 53
Rod mounting 38
Rotary switch 11

S

Safety transformer 17
Scaling 80
Scaling factor 58
Service 78
Service fax 94
Service interface 25, 26
Service order 94
Servicing 100
Slide switch 11
Soiling 42
Speed 79
Speed limit value 90
Speed measurement 80, 82, 84
Speed parameters 80
Start-up delay 60
Status
  PROFIBUS 25
Status information 70, 84
Status LED 25
SubD connector 27
Supply voltage 17
Surface 31
SW IN/OUT 21
Switching between tapes 35
Switching input 21, 60
Switching output 21

Switch-off delay 61
Switch-off function 63
Switch-on function 62
Symbols 3

T

Tape height 9, 40
Tape value correction 91
Technical data 14
  Bar code tape 15, 29
  Connection units 23
  Electrical data 14
  Environmental data 14
  Measurement data 14
  Mechanical data 14
  Optical data 14
  PROFIBUS connection cable 98
  Voltage supply cable 96
Termination
  TS 02-4-SA connector 20
Total reflection 41
Trouble shooting 93
Type overview 95
  Bar code tape 98
  BPS 34 95

U

Universal module 47

W

Wire cross section 19
Working range 22