SMART
SENSOR
BUSINESS

Leuze electronic

the sensor people

DCR 202i

Camera-based code reader

EN 2019/01 - 50130061
We reserve the right to
make technical changes

Original operating instructions

ПРОМЭЛЕКТРОНИКА / sales@prom-elec.com

© 2019
Leuze electronic GmbH & Co. KG
In der Braike 1
D-73277 Owen / Germany
Phone: +49 7021 573-0
Fax: +49 7021 573-199
http://www.leuze.com
info@leuze.com

1 About this document ... 6
1.1 Used symbols and signal words ... 6
2 Safety ... 8
2.1 Intended use ... 8
2.2 Foreseeable misuse ... 8
2.3 Competent persons ... 9
2.4 Disclaimer ... 9
3 Device description ... 10
3.1 Device overview ... 10
3.1.1 About the DCR 200i code reader ... 10
3.1.2 Performance characteristics ... 10
3.1.3 Accessories ... 11
3.1.4 Device model with heating ... 11
3.2 Device construction ... 12
3.3 Connection technology ... 13
3.4 Indicators and operational controls ... 13
3.4.1 LED indicators ... 14
3.4.2 Bar graph display ... 16
3.4.3 Control buttons ... 17
4 Functions ... 18
4.1 Camera operating modes ... 18
4.1.1 Single trigger mode ... 18
4.1.2 Reading gate control ... 18
4.1.3 Burst mode ... 18
4.1.4 Presentation mode ... 19
4.1.5 Continuous mode ... 19
4.2 Reference code comparison ... 19
4.3 Code quality ... 20
4.4 Leuze webConfig tool ... 21
5 Applications ... 22
5.1 Reading of 1D-codes ... 22
5.2 Reading of 2D-codes ... 23
5.3 Code reading with polarization filter ... 23
5.4 Code reading with diffusor foil ... 24
6 Mounting ... 25
6.1 Determining the mounting position of the code reader ... 25
6.1.1 Selecting a mounting location ... 25
6.1.2 Avoiding total reflection ... 26
6.1.3 Determining the reading distance ... 26
6.2 Mounting the code reader ... 47
6.2.1 Mounting with M4 fastening screws ... 47
6.2.2 Mounting with the BTU 320M-D12 mounting system ... 47
6.2.3 Mounting with the BT 320M mounting bracket ... 47
6.2.4 Mounting with the BTU 320M-D12-RL70 mounting bracket ... 47
6.3 Replace housing hood ... 48
6.4 Attaching the diffusor foil ... 49

7 Electrical connection ... 50

7.1 Overview ... 51

7.2 PWR / SWIO ... 52
7.2.1 Voltage supply / switching inputs/outputs / RS 232/RS 422 ... 52
7.2.2 Voltage supply / NPN switching inputs/outputs / RS 232/RS 422 ... 55

7.3 HOST - Host input / Ethernet ... 58

7.4 Ethernet star topology ... 58

7.5 Cable lengths and shielding ... 60

7.6 Connecting code reader to fieldbus ... 60

7.7 Connecting code reader to MA 150 connection unit ... 60

8 Starting up the device – Basic configuration ... 62

8.1 Measures to be performed prior to the initial commissioning ... 62

8.2 Starting the device ... 62

8.3 Setting the communication parameters ... 63
8.3.1 Manually setting the IP address ... 63
8.3.2 Automatically setting the IP address ... 64
8.3.3 Address Link Label ... 64
8.3.4 Ethernet host communication ... 65
8.3.5 RS 232/RS 422 communication ... 66
8.3.6 FTP client ... 66

8.4 Configuration via configuration codes ... 66

8.5 Activating device functions ... 67

8.6 Performing further settings ... 68
8.6.1 Decoding and processing the read data ... 68
8.6.2 Control of the decoding ... 68
8.6.3 Activating camera operating mode ... 69
8.6.4 Control of the switching outputs ... 69
8.6.5 Optimizing reading performance ... 70
8.6.6 Transfer configuration data ... 70

9 Commissioning – Leuze electronic webConfig tool ... 71

9.1 System requirements ... 71

9.2 Start webConfig tool ... 71

9.3 Short description of the webConfig tool ... 72
9.3.1 Change operating mode ... 73
9.3.2 Menu options of the webConfig tool ... 73
9.3.3 CONFIGURATION menu ... 74
9.3.4 Configuring applications with the wizard ... 75

10 Interfaces – Communication ... 76

10.1 Online commands ... 76
10.1.1 Overview of commands and parameters ... 76
10.1.2 General online commands ... 76
10.1.3 Online commands for system control ... 81

10.2 XML-based communication ... 81

11 Care, maintenance and disposal ... 82

12 Diagnostics and troubleshooting ... 83

13 Service and support ... 84

13.1 What to do should servicing be required? ... 84

14 Technical data 85
14.1 General specifications 85
14.2 Optical data 86
14.3 Code specifications 87
14.4 Device with heating 87
14.5 Dimensioned drawings 88
14.6 Dimensioned drawings - Accessories 89
15 Order guide and accessories 92
15.1 Nomenclature 92
15.2 Type overview 93
15.3 Optical accessories 94
15.4 Cables accessories 94
15.5 Other accessories 95
16 EC Declaration of Conformity 97
17 Appendix 98
17.1 ASCII character set 98
17.2 Code samples 101
17.3 Configuration via configuration codes 103
17.4 License terms 104

1 About this document

1.1 Used symbols and signal words

Tab. 1.1: Warning symbols and signal words

	Symbol indicating dangers to persons
NOTE	Signal word for property damage Indicates dangers that may result in property damage if the measures for danger avoidance are not followed.
CAUTION	Signal word for minor injuries Indicates dangers that may result in minor injury if the measures for danger avoidance are not followed.

Tab. 1.2: Other symbols

	Symbol for tips Text passages with this symbol provide you with further information.
	Symbol for action steps Text passages with this symbol instruct you to perform actions.

Tab. 1.3: Terms and abbreviations

CMOS	Semiconductor process for implementing integrated circuits (**C**omplementary **M**etal-**O**xide-**S**emiconductor)
DCR	Camera-based code reader (**D**ual **C**ode **R**eader)
EMC	Electromagnetic compatibility
EN	European standard
FE	Functional earth
FOV	Reading field of the code reader (**F**ield **o**f **V**iew)
IO or I/O	**I**nput/**O**utput
IP address	Network address, which is based on the Internet Protocol (IP)
LED	LED (**L**ight **E**mitting **D**iode)
MAC address	Hardware address of a device in the network (**M**edia **A**ccess **C**ontrol address)
PCRE	Regular expressions for reference code comparison (**P**erl **C**ompatible **R**egular **E**xpressions)
PELV	Protective extra low voltage with reliable disconnection (**P**rotective **E**xtra **L**ow **V**oltage)
ROI	Region of interest of the code reader (**R**egion **o**f **I**nterest)
PLC	Programmable Logic Control (corresponds to Programmable Logic Controller (PLC))
TCP/IP	Internet protocol family (**T**ransmission **C**ontrol **P**rotocol/**I**nternet **P**rotocol)
UDP	Network transmission protocol (**U**ser **D**atagram **P**rotocol)
UL	**U**nderwriters **L**aboratories

2 Safety

This code reader was developed, manufactured and tested in accordance with the applicable safety standards. It corresponds to the state of the art.

2.1 Intended use

The code readers of the DCR 200i series are camera-based code readers for all commonly used bar codes, stacked codes and DataMatrix codes as well as for codes of the GS1 DataBar family.

Areas of application

The code readers of the DCR 200i series are especially designed for the following areas of application:

- Packaging systems
- Mounting/handling technology
- Analysis technology

CAUTION

Observe intended use!

The protection of personnel and the device cannot be guaranteed if the device is operated in a manner not complying with its intended use.

- Only operate the device in accordance with its intended use.
- Leuze electronic GmbH + Co. KG is not liable for damages caused by improper use.
- Read these operating instructions before commissioning the device. Knowledge of the operating instructions is an element of proper use.

NOTICE

Integrated illumination!

The code readers of the DCR 200i series correspond to the following classification with respect to the integrated illumination:

- Illumination **red**: risk group 0 (exempt group) in acc. with EN 62471

NOTICE

Comply with conditions and regulations!

- Observe the locally applicable legal regulations and the rules of the employer's liability insurance association.

2.2 Foreseeable misuse

Any use other than that defined under "Intended use" or which goes beyond that use is considered improper use.

In particular, use of the device is not permitted in the following cases:

- in rooms with explosive atmospheres
- in circuits which are relevant to safety
- in food processing (except device with stainless steel housing)
- for medical purposes

NOTICE

Do not modify or otherwise interfere with the device!

- Do not carry out modifications or otherwise interfere with the device.
  The device must not be tampered with and must not be changed in any way.
- The device may only be opened for exchanging the housing hood.
  Stainless stainless steel housings must not be opened.
- There are no user-serviceable parts inside the device.
- Repairs must only be performed by Leuze electronic GmbH + Co. KG.

2.3 Competent persons

Connection, mounting, commissioning and adjustment of the device must only be carried out by competent persons.

Prerequisites for competent persons:

- They have a suitable technical education.
- They are familiar with the rules and regulations for occupational safety and safety at work.
- They are familiar with the operating instructions for the device.
- They have been instructed by the responsible person on the mounting and operation of the device.

Certified electricians

Electrical work must be carried out by a certified electrician.

Due to their technical training, knowledge and experience as well as their familiarity with relevant standards and regulations, certified electricians are able to perform work on electrical systems and independently detect possible dangers.

In Germany, certified electricians must fulfill the requirements of accident-prevention regulations BGV A3 (e.g. electrician foreman). In other countries, there are respective regulations that must be observed.

2.4 Disclaimer

Leuze electronic GmbH + Co. KG is not liable in the following cases:

- The device is not being used properly.
- Reasonably foreseeable misuse is not taken into account.
- Mounting and electrical connection are not properly performed.
- Changes (e.g., constructional) are made to the device.

3 Device description

3.1 Device overview

3.1.1 About the DCR 200i code reader

The code readers of the DCR 200i series are camera-based code readers for all commonly used bar codes, stacked codes and Data Matrix codes (e.g. Code 128, EAN 8/13, ECC200, QR etc.) as well as for codes of the GS1 DataBar family.

The extensive options for device configuration via control buttons, configuration codes or software enable adaptation to a multitude of reading tasks. The high resolution in combination with a very high depth of field as well as the compact design make the device ideal for use in packaging machines.

Code readers of the DCR 200i series perform numerous tasks in industrial code reading such as:

- Omnidirectional code reading
- Reading of codes while at a standstill or in motion
- Manual reading by holding up codes
- In packaging machines
- In automatic handling and testing machines

The DCR 2xxi code readers are available in several optics models:

- DCR 2xxi with Ultra High Density optics (U-optics)
- DCR 2xxi with High Density optics (N-optics)
- DCR 2xxi with Medium Density optics (M-optics)
- DCR 2xxi with Low Density optics (F-optics)
- DCR 2xxi with Ultra Low Density optics (L-optics)

The DCR 2xxi code readers are operated as a “stand-alone” single device with individual IP address in an Ethernet star topology.

Information on technical data and characteristics: see chapter 14 "Technical data".

3.1.2 Performance characteristics

- Decoding of 1D-, stacked- and 2D-codes
- Maximum depth of field and reading distance of approx. 40 mm … 800 mm
- High object speed and decoding performance of up to 7 m/s with 10 decodings
- Reference code comparison
- Quality evaluation of 1D bar codes and 2D-codes in accordance with ISO/IEC 15415 and ISO/IEC 15416
- Integrated process interfaces RS 232, RS 422 and Ethernet

  The MA 2xxi modular connection units are available for connecting to other fieldbus systems, e.g., PROFIBUS, PROFINET, EtherCAT, etc.
- Four freely programmable switching inputs/outputs for the activation or signaling of states:
  - 1 switching input
  - 1 switching output
  - 2 switching inputs/outputs
- Optional: device model with NPN switching inputs/outputs
- Optional: Robust stainless steel housing for use in the food and pharmaceutical industry; with lens cover made of plastic or glass
- Integrated red LED illumination for illumination of the rectangular read field
- Green feedback LED for direct acknowledgment of whether the read process was successful
- Two control buttons for intuitive operation without PC
- Industrial design: degree of protection IP 65 acc. to EN 60529
  (Device with stainless steel housing: degree of protection IP 67/69K)
- Diverse mounting options with mounting threads on rear and side surfaces

- Variously coded M12 connections for unique assignment of the connections:
  - Voltage supply, RS 232/RS 422, switching inputs/outputs
  - Ethernet connection
- webConfig, a web-based configuration tool for configuration of all device parameters

  No additional configuration software necessary
- Installation wizard for simple configuration in just a few steps
- Integrated teach functions for automatic adjustment of the exposure time, of the code types, and of the number of digits and for teaching a reference code

3.1.3 Accessories

Special accessories are available for the code reader (see chapter 15 "Order guide and accessories"):

- Mounting systems for mounting
- Housing hood with integrated protective screen made of glass for increased protection against scratches or welding sparks
- Housing hood with integrated linear polarisation filter – avoids additional interfering reflections
- Diffusor foil that can be affixed to housing hoods, with plastic or glass screen. The diffusor foil reduces interfering reflections
- Connection and interconnection cables for M12 connectors
- External illumination and mounting bracket for external illumination

  For further information, contact your responsible Leuze electronic subsidiary or Leuze electronic customer service (see chapter 13 "Service and support")
- MA 2xxi modular connection units for connection to fieldbus systems (see chapter 7.6 "Connecting code reader to fieldbus")
- MA 150 modular connection unit for decentralized distribution of the signals (see chapter 7.7 "Connecting code reader to MA 150 connection unit")
- Connection to Ethernet switch

3.1.4 Device model with heating

The code reader is optionally available as a model with integrated heating. In this case, heating is permanently installed ex works.

Features of the integrated heating:

- Extension of the application range -30 °C … +50 °C
- Supply voltage: 18 V … 30 V DC
- Average power consumption: 12 W

3.2 Device construction

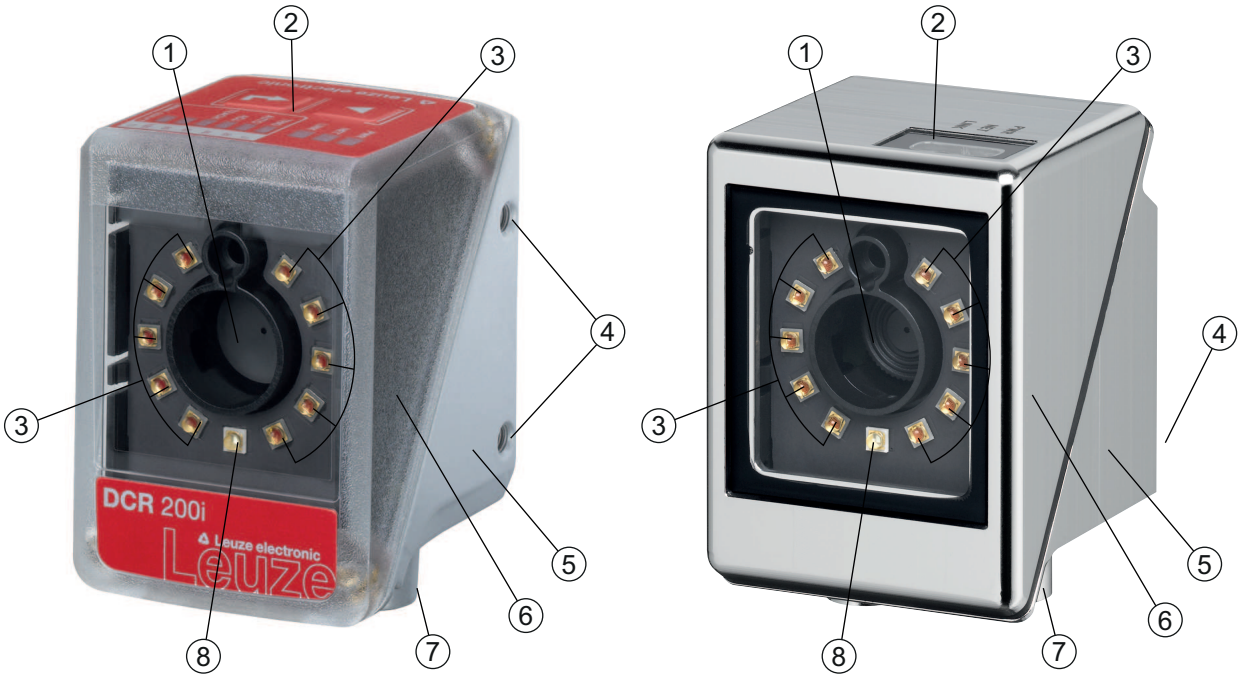

1 Lens
2 Control panel with indicator LEDs, control buttons, bar graph display
Device with stainless steel housing: indicator LEDs
3 LEDs for illumination (red light)
4 M4 mounting thread
5 Device housing
6 Housing hood
7 M12 connection technology
8 Feedback LED (green)

Fig. 3.1: Device construction

3.3 Connection technology

The device is connected using variously coded M12 connectors:

- A-coded, 12-pin, M12 connection for operating voltage, switching inputs/outputs, RS 232/RS 422 interface
- D-coded, 4-pin, M12 connection for the Ethernet connection

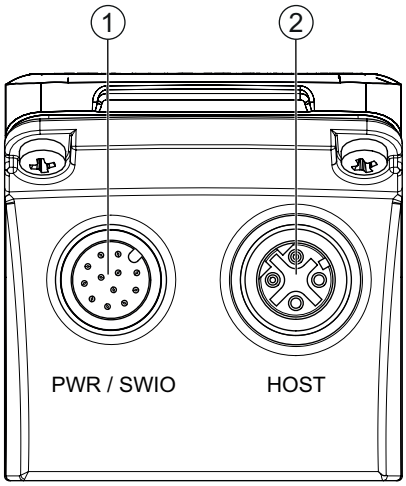

1 PWR / SWIO, M12 plug, 12-pin, A-coded
2 HOST, M12 socket, 4-pin, D-coded

Fig. 3.2: Electrical connections

	NOTICE
	Ready-made cables are available for all connections (see chapter 15.4 "Cables accessories").

	NOTICE
	Shielding connection! ↳ The shielding is connected via the M12 connector housing.

3.4 Indicators and operational controls

	NOTICE
	Devices with stainless steel housing do not have any control buttons. Devices with stainless steel housing do not have a bar graph indicator.

The device is equipped with the following indicators and operational controls:

- Feedback LED

  The green feedback LED indicates whether a read process was successful. This function is activated upon shipment of the device from the factory and can be deactivated via the webConfig tool.

  Upon successful decoding, the feedback LED illuminates briefly (GOOD READ, MATCH).
- Three indicator LEDs (PWR, NET, LINK)
- Six-level bar graph display for function selection and display of the reading quality (SIGNAL QUALITY) – not with devices with stainless steel housing
- Two control buttons – not on devices with stainless steel housing

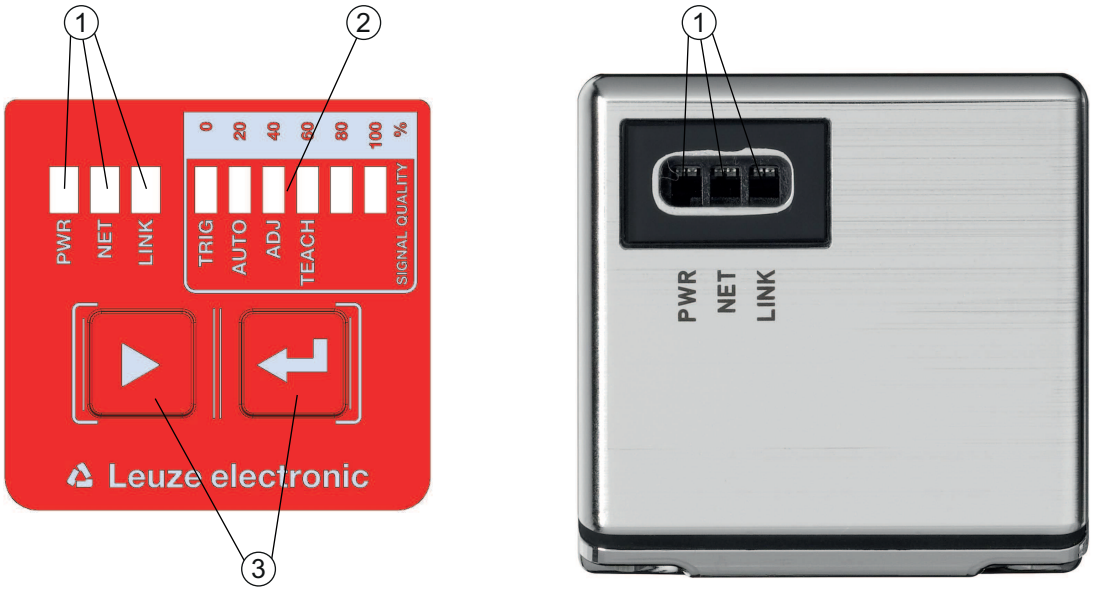

1 LED indicators: PWR, NET, LINK
2 Bar graph display
3 Control buttons

Fig. 3.3: Layout of indicator and control panel

3.4.1 LED indicators

PWR LED

Tab. 3.1: PWR indicators

Color	State	Description
---	OFF	Device off No operating voltage
Green	Flashing	Device ok • Initialization phase • Code reading not possible • Operating voltage applied • Self test running
	ON (continuous light)	Device ok • Code reading possible • Self test successfully finished • Device monitoring active
Orange	ON (continuous light)	Service mode • Code reading possible • No data on the host interface
	Flashing	Wave function (synchronous with NET LED) • Code reading possible

Color	State	Description
Red	Flashing	Device ok, warning set • Code reading possible • Temporary operating fault
	ON (continuous light)	Device error/parameter enable No code reading possible

NET LED

Tab. 3.2: NET indicators

Color	State	Description
---	OFF	No operating voltage • No communication possible • Ethernet protocols not released
Green	Flashing	Initialization of the device Establishing communication
	ON (continuous light)	Operation ok • Network mode ok • Connection and communication to Host established
Red	Flashing	Communication error • Temporary connection error • If DHCP active: No IP address could be obtained
	ON (continuous light)	Network error • No connection established • No communication possible

NOTICE

NET indicator only for Ethernet communication!

The NET indicator refers only to the Ethernet communication, not to the RS 232/RS 422.

LINK LED

Tab. 3.3: LINK indicators

Color	State	Description
Green	ON (continuous light)	Ethernet connected (LINK)
Yellow	Flashing	Data communication (ACT)

3.4.2 Bar graph display

Function selection

NOTICE
Devices with stainless steel housing do not have any control buttons. Devices with stainless steel housing do not have a bar graph indicator.

The following functions are selected and displayed via the bar graph display (see chapter 8.5 "Activating device functions"):

- *TRIG*: Trigger function for activating a read process
- *AUTO*: Auto setup function for determining the optimum read setting
- *ADJ*: Adjustment function for aligning the device
- *TEACH*: Teach function for teaching a reference code

The individual functions are selected and activated with the control buttons.

- Select function with the navigation button ▶: The function LED flashes.
- Activate function with the enter button ↵: The function LED illuminates continuously.

NOTICE
A preselected function (flashing LED) does not yet have any influence on the functionality. If no button is pressed for a longer period of time, flashing of the LED is ended automatically by the device.

NOTICE
If you activate the *TRIG*, *AUTO*, *ADJ* or *TEACH* function via the control buttons, the device accepts no commands via the process interface. Process mode is thereby interrupted.

NOTICE
On devices with stainless steel housing, it is not possible to select functions using the control buttons.

3.4.3 Control buttons

The functions of the bar graph display are controlled via the control buttons.

	NOTICE
	Devices with stainless steel housing do not have any control buttons. Devices with stainless steel housing do not have a bar graph indicator.

	NOTICE
	In the *Service* operating mode (which is set using the webConfig tool), the code reader cannot be operated using the control buttons.

- ▶ – Navigation button: Scroll through the functions in the bar graph display from left to right.
- ↵ – enter button: Scroll through the functions in the bar graph display.

	NOTICE
	A preselected function (flashing LED) does not yet have any influence on the functionality. If no button is pressed for a longer period of time, flashing of the LED is ended automatically by the device.

Example: Activation of the trigger

↳ Press the navigation button ▶.

⇨ The TRIG LED flashes and the *Trigger* function is preselected.

↳ Press the enter button ↵.

⇨ The TRIG LED illuminates continuously.

⇨ The configured *Trigger* function (e.g., reading gate control) is started.

4 Functions

This chapter describes the functions of the code reader:

- Camera operating modes (see chapter 4.1 "Camera operating modes")
- Reference code comparison (see chapter 4.2 "Reference code comparison")
- Code quality (see chapter 4.3 "Code quality")
- webConfig tool (see chapter 4.4 "Leuze webConfig tool")

4.1 Camera operating modes

The camera operating mode defines how the code reader starts a read process and decodes the codes if a code is located in the read field.

4.1.1 Single trigger mode

In the "Single trigger mode" camera operating mode, the code reader captures *one* image and attempts to decode it. Under uniform conditions, this camera operating mode makes fast decoding possible.

4.1.2 Reading gate control

The "Reading gate control" camera operating mode is activated upon shipment from the factory. The reading gate control opens a time window for the read process in the code reader – the reading gate. In this time window, the code reader can capture and decode one or more codes.

4.1.3 Burst mode

In the "Burst mode" camera operating mode, the code reader captures *multiple* images in quick succession after activation by a trigger signal. The maximum number of image acquisitions can be set.

- Decoding occurs following image capture, thereby allowing the codes to be detected more quickly.
- As soon as the decoding result corresponds to the settings, the decoding stops the capture of the remaining images.

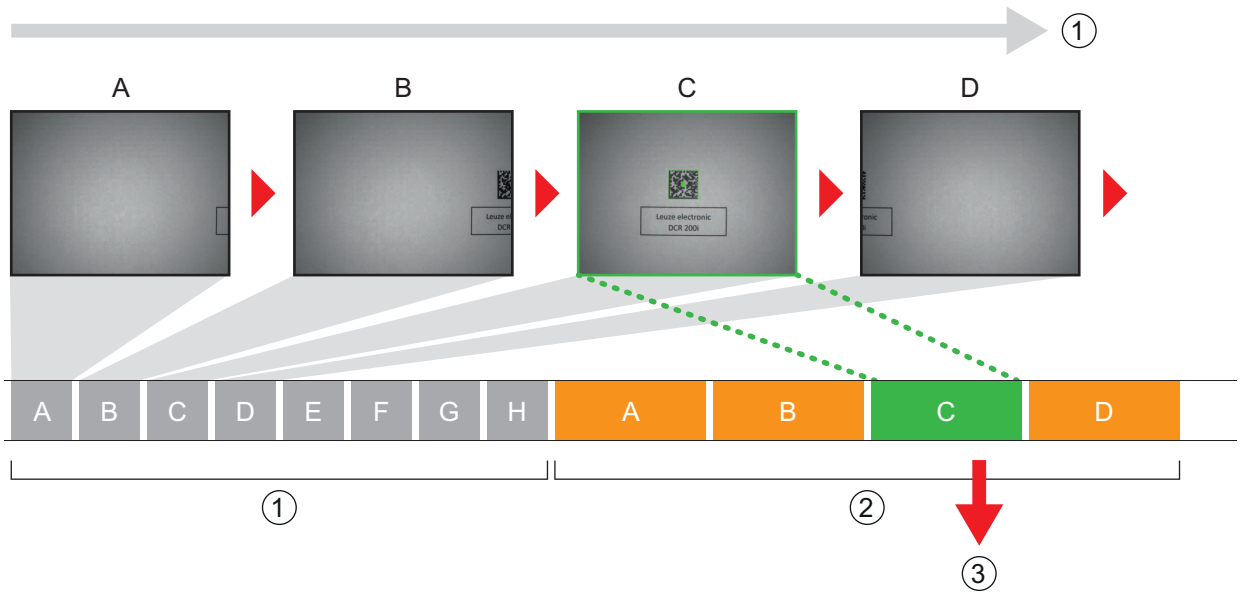

1 Continuous image capture
2 Decoding
3 Output of the read data

Fig. 4.1: "Burst mode" camera operating mode

4.1.4 Presentation mode

In the "Presentation mode" camera operating mode, the code reader is in the idle state in a kind of wait mode.

In the event of a change in the image area, e.g., by holding up a code, the code reader captures images with illumination (as previously configured) until a code is read successfully. The code reader then switches back to the wait mode and the illumination switches off after a few seconds.

Reading the same code multiple times

To prevent the same code from being read and output repeatedly in the "Presentation mode" camera operating mode, a delay time can be defined that must elapse before a code can be read again.

The delay time is set or deactivated with the webConfig tool (see chapter 9 "Commissioning – Leuze electronic webConfig tool").

Configuration > Control > Reread delay

Sensitivity

This function can only be activated in the "Presentation mode" camera operating mode. You can set the sensitivity threshold at which a change in the field of view is to be detected: 0 … 100.

- 0 = not sensitive
- 100 = sensitive

4.1.5 Continuous mode

In the "Continuous mode" camera operating mode, the code reader operates continuously in process mode. In this mode, image acquisition is started again immediately after an image has been processed. An external trigger signal is not required.

Image frequency

You can limit the maximum number of images per second. A reduction in image frequency is recommended for slow applications where the object with the code moves slowly past the code reader. Consider here the decoding time per decoding.

- It is recommended to limit the decoding time.
- It is recommended to deactivate the NO READ output.

4.2 Reference code comparison

With the reference code comparison, the code reader compares the actual decoding result with a stored reference code – the exact code content is compared.

Options for teaching-in a new reference code:

- webConfig tool: **Configuration > Decoder > Reference**
- Online command via the host interface
- Signal via a digital switching input
- TEACH function on the control panel of the code reader (not with devices with stainless steel housing)

In the webConfig tool, the exact code content can be entered for comparison.

Regular expressions

As an alternative to the exact code comparison, regular expressions can be used for a partial comparison.

Regular expressions can only be entered via the webConfig tool (see chapter 9 "Commissioning – Leuze electronic webConfig tool").

Detailed information on regular expressions can be found on the Internet under Perl Compatible Regular Expressions (PCRE) **http://www.pcre.org/**.

- Example 1

  The code reader is to perform a partial comparison of two characters "42". Any number of characters and content may precede the string "42".

  - Comparison string entered in the webConfig tool: 42
  - Positive reference code comparison (match): 123**42**5
  - Negative reference code comparison (mismatch): 12345
- Example 2

  The code reader is to perform a partial comparison of two characters "42". Beginning with the string "42", any number of characters and content may follow.

  - Comparison string entered in the webConfig tool: ^42
  - Positive reference code comparison (match): **42**345
  - Negative reference code comparison (mismatch): 12345

	NOTICE
	Using space characters with regular expressions! ↳ When entering regular expressions, note the use of space characters.

4.3 Code quality

Overview

To check the code quality, you can activate the *Code quality* function. This function determines the code quality for bar codes and 2D-codes in compliance with ISO/IEC 15416 and ISO/IEC 15415.

	NOTICE
	Activating the *Code quality* function increases the decoding time.

The code quality is given as follows: A … F

- A = High quality
- F = Low quality

The following options are available:

- Determination of individual features for bar codes and 2D-codes
- Setting of a minimum quality (= NOMINAL MINIMUM)
- Output of each feature via the interface and as a programmable switching output

ISO/IEC 15416 mode: Individual features for bar codes

- Overall quality
- Symbol contrast (SC)
- Modulation (MOD)
- Decodability
- Minimal edge contrast (EC_{min})
- Minimal reflectance (R_{min})
- Defects
- Decodes

ISO/IEC 15415 mode: Individual features for 2D-codes

- Overall quality
- Symbol contrast (SC)
- Modulation (MOD)
- Decodability
- Fixed pattern damage (FPD)
- Axial non-uniformity (AN)
- Grid non-uniformity (GN)
- Unused error correction (UEC)
- Reflectance margin
- Print growth
- Defects (only PDF417)
- Start/stop pattern (only PDF417)
- Codeword yield (only PDF417)

Overall quality

The "Overall quality" feature corresponds to the lowest ascertained individual quality. If multiple codes are decoded, the minimum quality is output via the switching output for the first found code only.

4.4 Leuze webConfig tool

The webConfig configuration tool offers a graphical user interface for the configuration of the code reader via a PC (see chapter 9 "Commissioning – Leuze electronic webConfig tool").

The wizard of the webConfig tool can be used to easily configure the code reader in just a few steps.

5 Applications

5.1 Reading of 1D-codes

Fig. 5.1: Reading of 1D-codes

5.2 Reading of 2D-codes

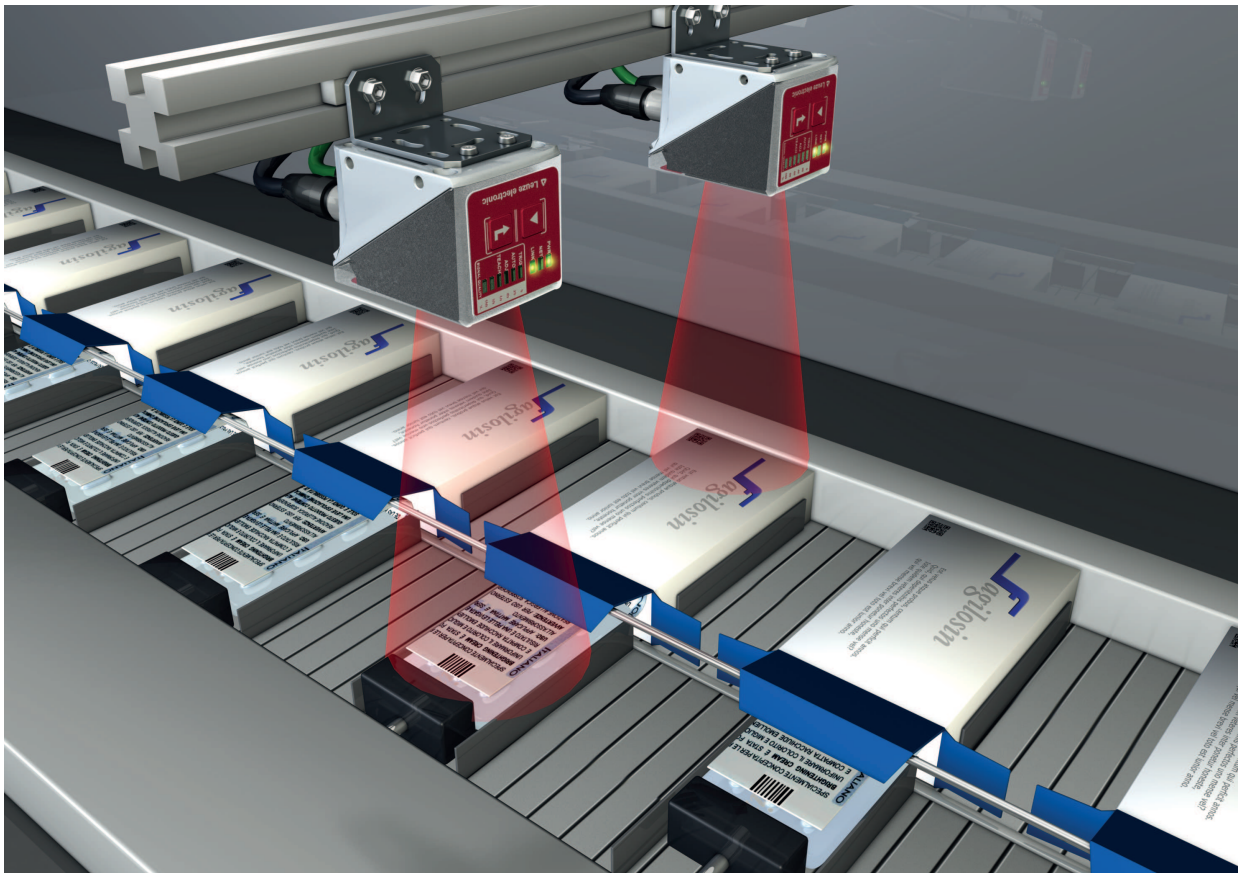

Fig. 5.2: Reading of 2D-codes in packaging systems

5.3 Code reading with polarization filter

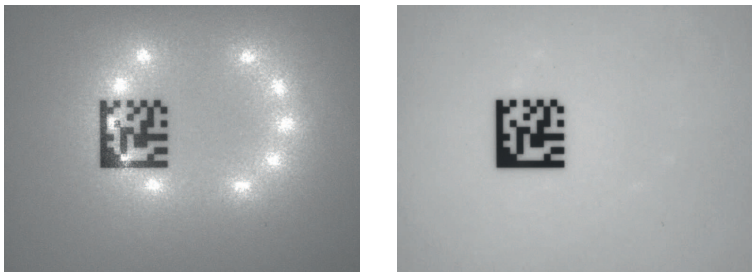

① ②

1 Code reading without polarization filter
2 Code reading with polarization filter

Fig. 5.3: Using the polarization filter

By using the linear polarization filter integrated in the housing hood, you can avoid interfering reflections.

	NOTICE
	When the polarization filter is used, the exposure settings change. The exposure time is increased considerably.

5.4 Code reading with diffusor foil

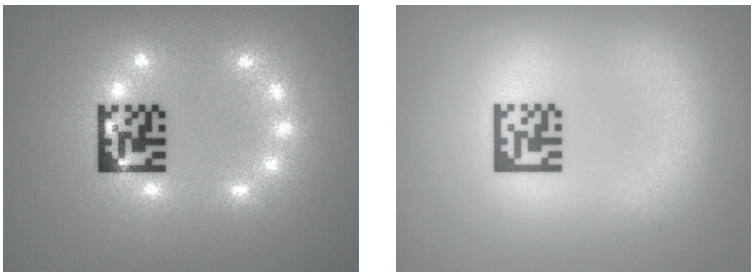

① ②

1 Code reading without diffusor foil
2 Code reading with diffusor foil

Fig. 5.4: Using the diffusor foil

The diffusor foil reduces interfering reflections by increasing the scatter of the integrated LED illumination of the code reader.

	NOTICE
	When the diffusor foil is used, the exposure settings change.

6 Mounting

The code reader can be mounted in the following ways:

- Mounting using four M4 mounting threads on the rear of the device
- Mounting using two M4 mounting threads on the rear of the device (devices with stainless steel housing)
- Mounting using two M4 mounting threads on each of the side surfaces of the device
- Mounting on a 12 mm rod using the BTU 320M-D12 mounting system
- Mounting on the BT 320M mounting bracket

	NOTICE
	↳ Mount the device on a metal mounting bracket.

6.1 Determining the mounting position of the code reader

6.1.1 Selecting a mounting location

	NOTICE
	The size of the code module influences the maximum reading distance and the width of the reading field. Therefore, when selecting a mounting location and/or the suitable code label, take into account the different reading characteristics of the code reader with various code modules.

	NOTICE
	Observe when choosing the mounting location! ↳ Make certain that the required environmental conditions (humidity, temperature) are maintained. ↳ Avoid possible soiling of the reading window due to liquids, abrasion by boxes, or packaging material residues. ↳ Ensure the lowest possible chance of damage to the code reader through mechanical collision or jammed parts. ↳ Avoid possible ambient light influence (no direct sunlight).

Take the following factors into account when selecting the correct mounting location:

- Size, orientation, and position tolerance of the bar codes or Data Matrix codes on the objects to be scanned.
- The reading distance resulting from the code size and code type (see chapter 6.1.3 "Determining the reading distance").
- Time of data output.

  Position the device in such a way that, taking into consideration the time required for data processing and the conveyor belt speed, there is sufficient time to e.g. initiate sorting operations on the basis of the read data.
- The permissible line lengths between code reader and host system depending on which interface is used.
- Visibility of the control panel and access to the control buttons.
- No direct sunlight and/or no strong ambient light on the code that is to be read.

Observe the following criteria for the best read results:

- The reading distance is located in the middle part of the read field (see chapter 6.1.3 "Determining the reading distance").
- There is no direct sunlight and protect against ambient light effects.
- The code labels are of good print quality and have good contrast ratios.
- Do not use glossy labels.
- The bar code or DataMatrix code is moved past the reading window with a tilt angle or angle of inclination of 10° … 20° (see chapter 6.1.2 "Avoiding total reflection").

6.1.2 Avoiding total reflection

If the illumination light of the code reader is directly incident on the surface of the code at an angle of 90°, total reflection occurs. The illumination light directly reflected by the code label may overload the code reader and thereby result in non-reading of the code.

↳ Mount the code reader with a tilt angle or angle of inclination of ±10° … 20° from vertical.

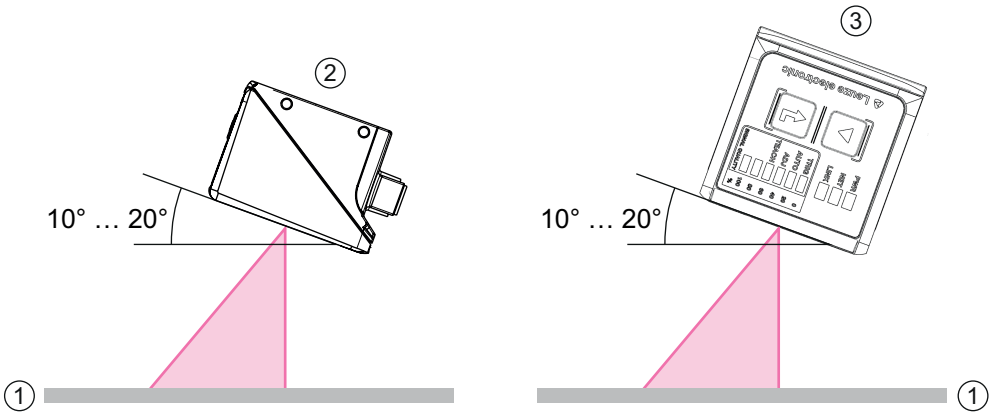

Recommended tilt angle or angle of inclination: 10° … 20°

1 Code label

2 Mounting with tilt angle

3 Mounting with angle of inclination

Fig. 6.1: Mounting with tilt angle or angle of inclination

6.1.3 Determining the reading distance

In general, the read field of the code reader becomes larger with increasing reading distance. This also results in a decrease in the resolution, however.

The following graphics show typical reading distances for the individual optics models of the code reader.

	NOTICE
	Code reading while in motion is dependent on the code type, code size, cell or modulus size of the code and the position of the code in the read field of the code reader.

Reading distances for code readers with U2-optics

NOTICE	
	Please note that the actual reading distances are also influenced by factors such as labeling material, printing quality, reading angle, printing contrast etc., and may thus deviate from the reading distances specified here.

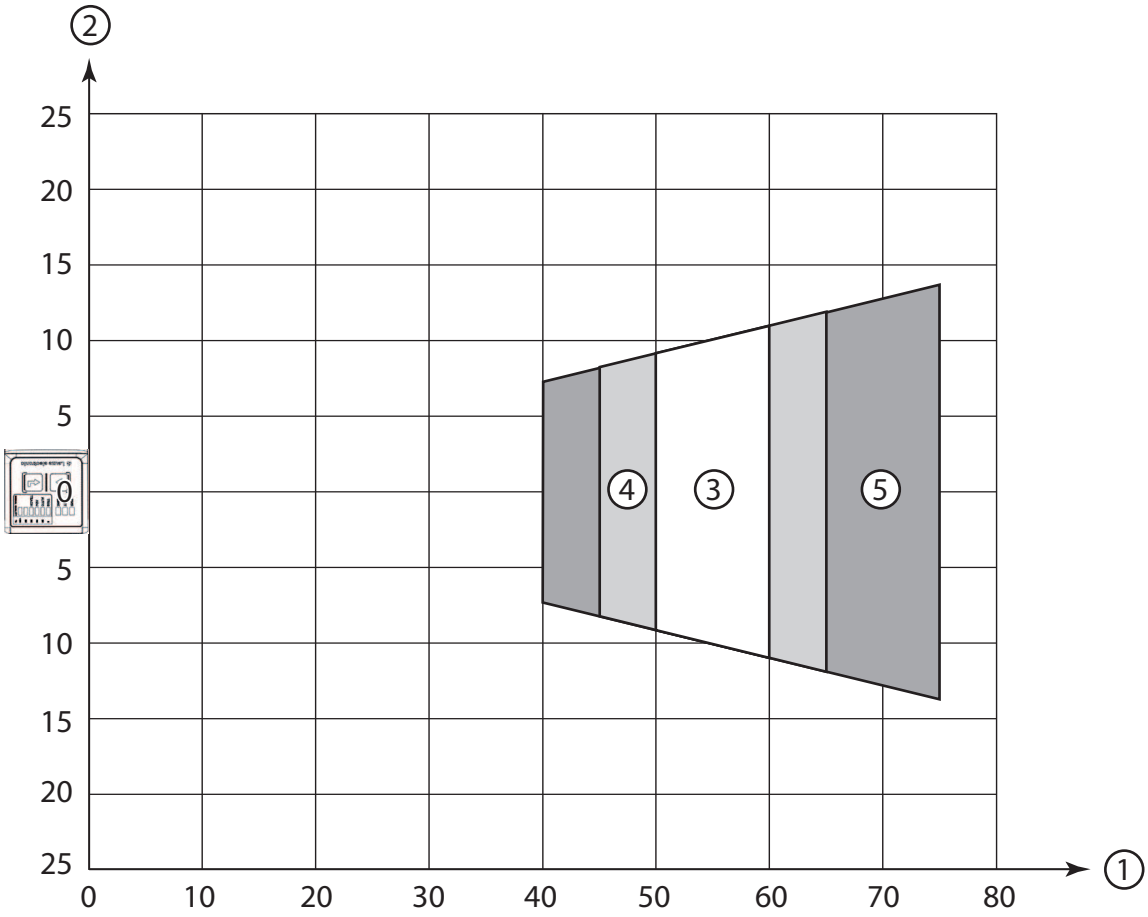

1 Reading distance [mm]
2 Reading field width [mm]
3 Resolution m1 = 0.1 mm (4 mil)
Reading field: 50 mm … 60 mm
4 Resolution m2 = 0.127 mm (5 mil)
Reading field: 45 mm … 65 mm
5 Resolution m3 = 0.2 mm (8 mil)
Reading field: 40 mm … 75 mm

Fig. 6.2: U2-optics **1D-codes**

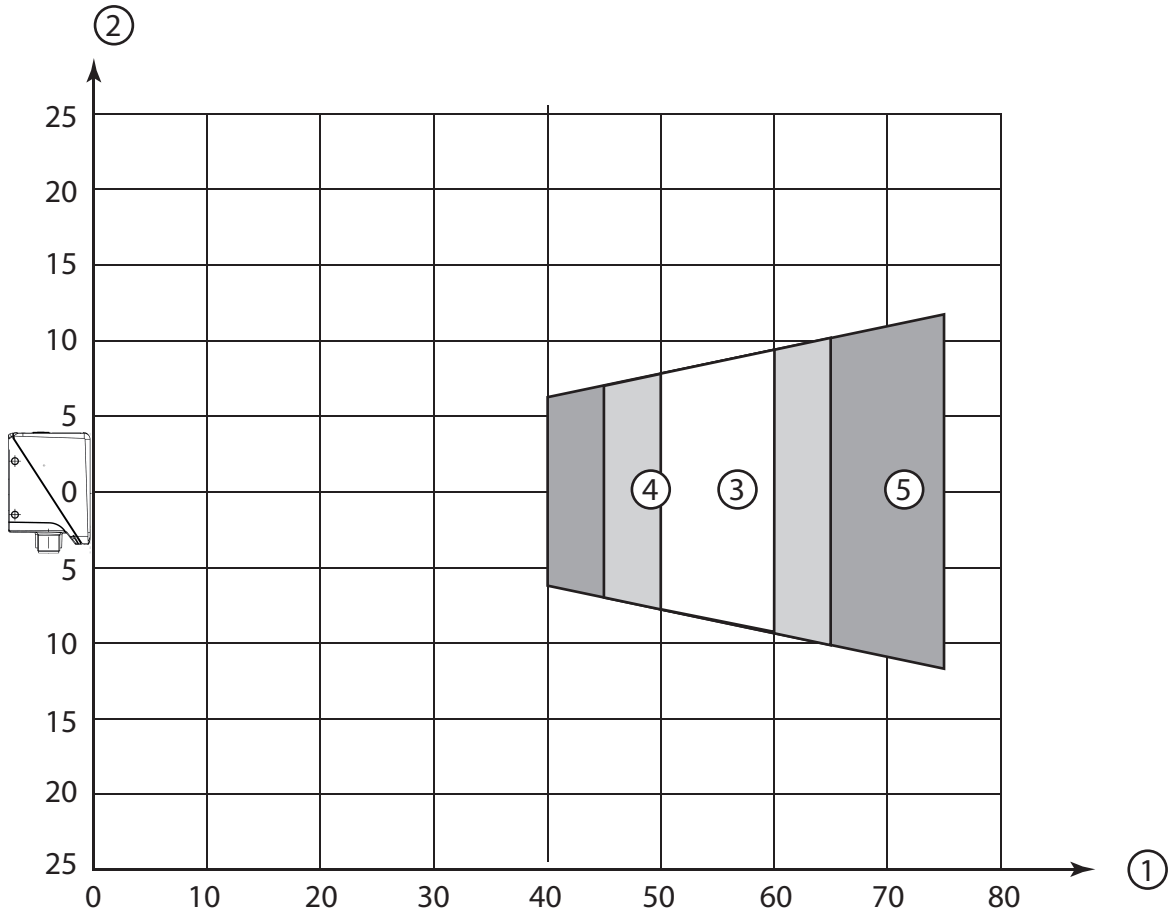

1 Reading distance [mm]
2 Reading field height [mm]
3 Resolution m1 = 0.1 mm (4 mil)
Reading field: 50 mm … 60 mm
4 Resolution m2 = 0.127 mm (5 mil)
Reading field: 45 mm … 65 mm
5 Resolution m3 = 0.2 mm (8 mil)
Reading field: 40 mm … 75 mm

Fig. 6.3: U2-optics **1D-codes**

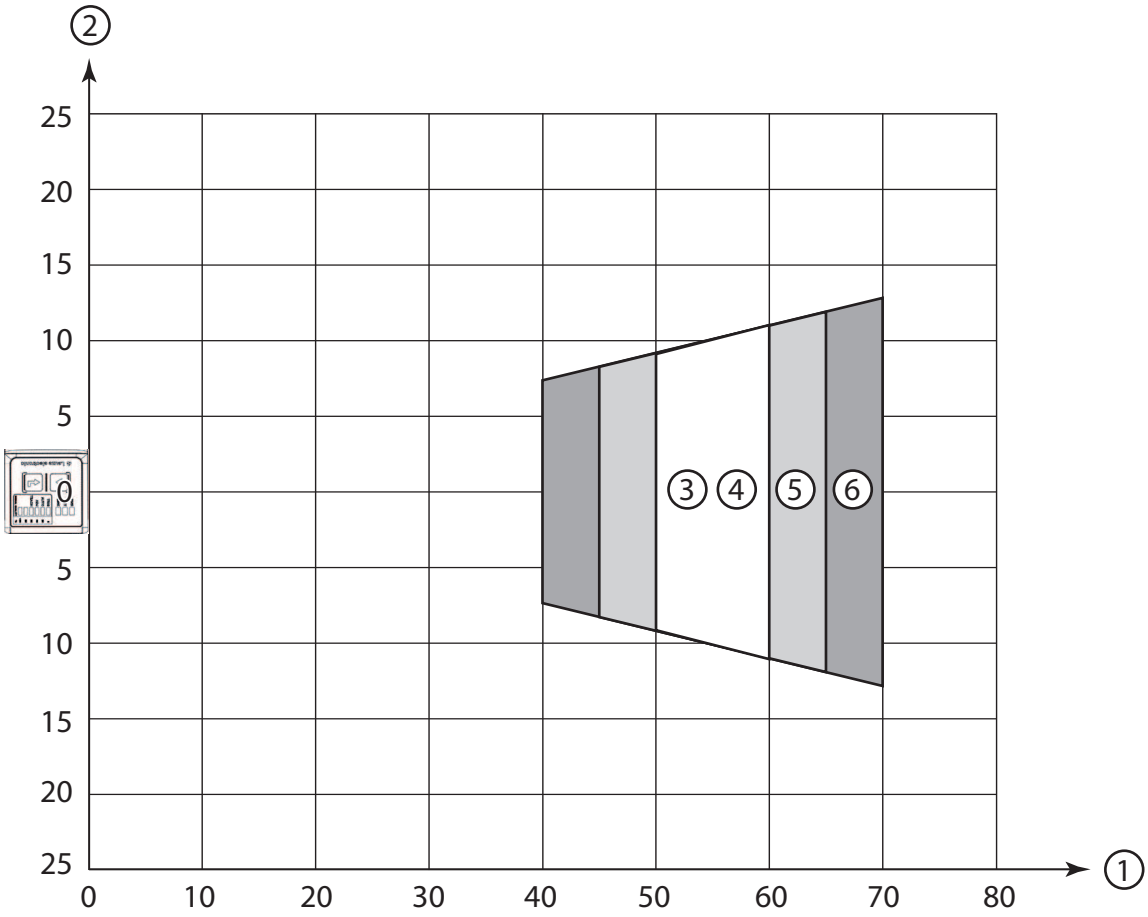

1 Reading distance [mm]
2 Reading field width [mm]
3 Resolution m1 = 0.1 mm (4 mil)
Reading field: 50 mm … 60 mm
4 Resolution m2 = 0.127 mm (5 mil)
Reading field: 50 mm … 60 mm
5 Resolution m3 = 0.19 mm (7.5 mil)
Reading field: 45 mm … 65 mm
6 Resolution m4 = 0.25 mm (10 mil)
Reading field: 40 mm … 70 mm

Fig. 6.4: U2-optics **2D-codes**

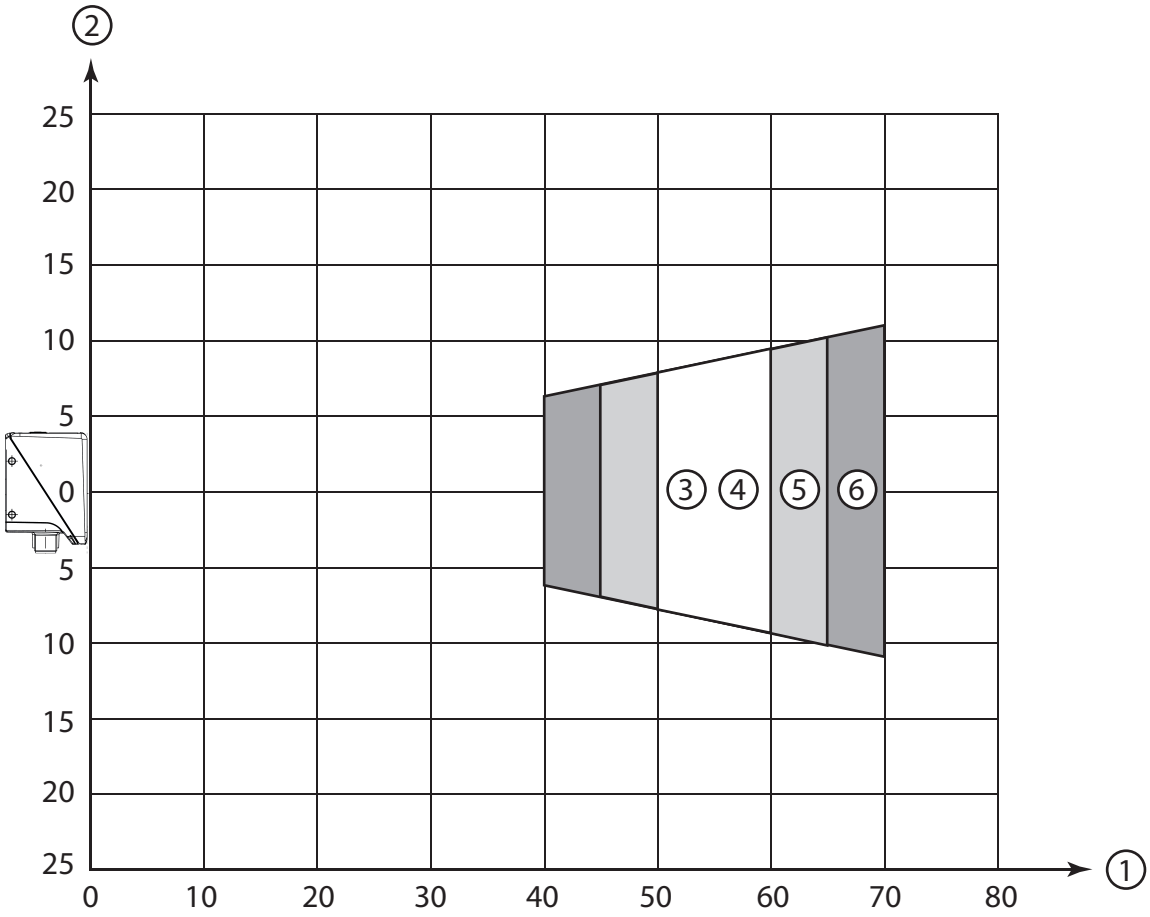

1 Reading distance [mm]
2 Reading field height [mm]
3 Resolution m1 = 0.1 mm (4 mil)
Reading field: 50 mm … 60 mm
4 Resolution m2 = 0.127 mm (5 mil)
Reading field: 50 mm … 60 mm
5 Resolution m3 = 0.19 mm (7.5 mil)
Reading field: 45 mm … 65 mm
6 Resolution m4 = 0.25 mm (10 mil)
Reading field: 40 mm … 70 mm

Fig. 6.5: U2-optics **2D-codes**

Reading distances for code reader with N1-optics

NOTICE	
	Please note that the actual reading distances are also influenced by factors such as labeling material, printing quality, reading angle, printing contrast etc., and may thus deviate from the reading distances specified here.

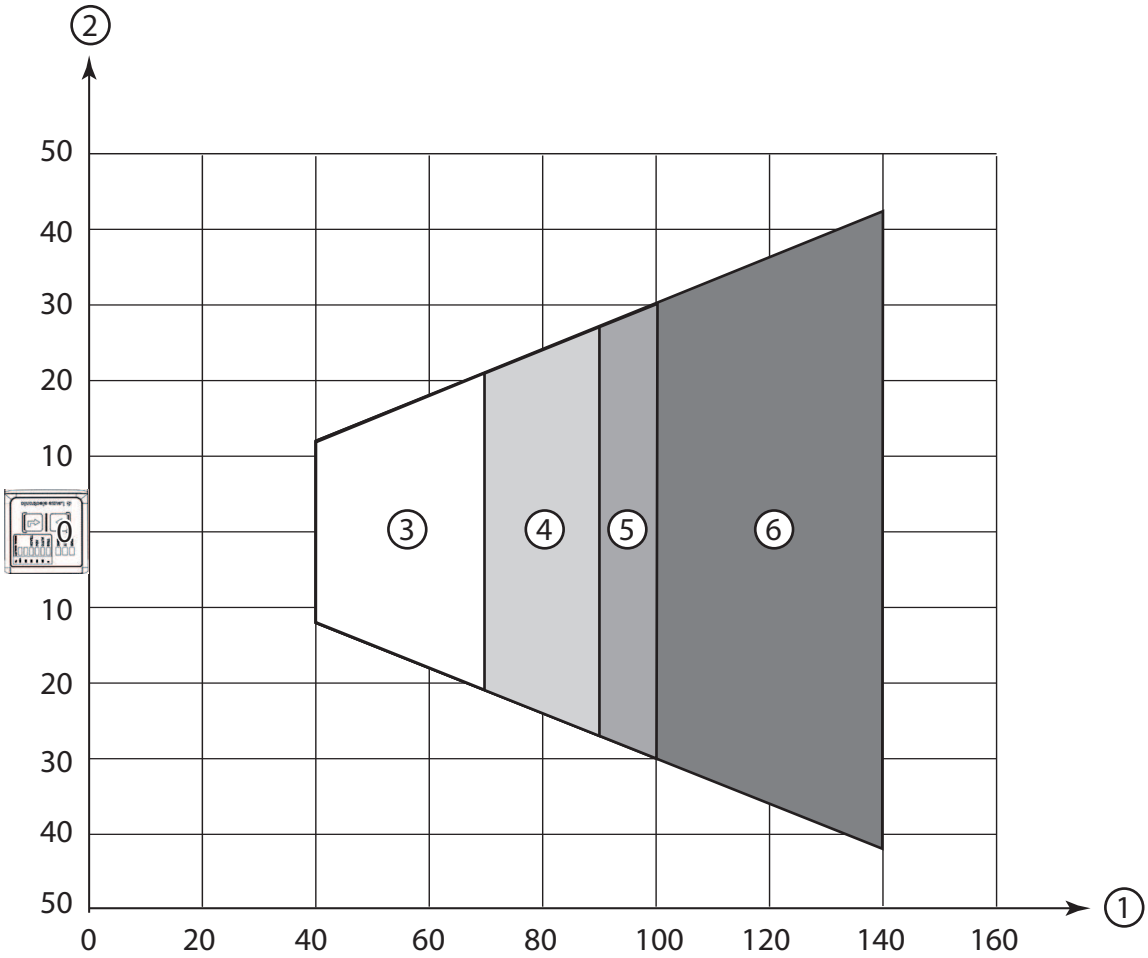

1 Reading distance [mm]
2 Reading field width [mm]
3 Resolution m1 = 0.127 mm (5 mil)
Reading field: 40 mm … 70 mm
4 Resolution m2 = 0.19 mm (7.5 mil)
Reading field: 40 mm … 90 mm
5 Resolution m3 = 0.25 mm (10 mil)
Reading field: 40 mm … 100 mm
6 Resolution m4 = 0.5 mm (20 mil)
Reading field: 40 mm … 140 mm

Fig. 6.6: N1-optics **1D-codes**

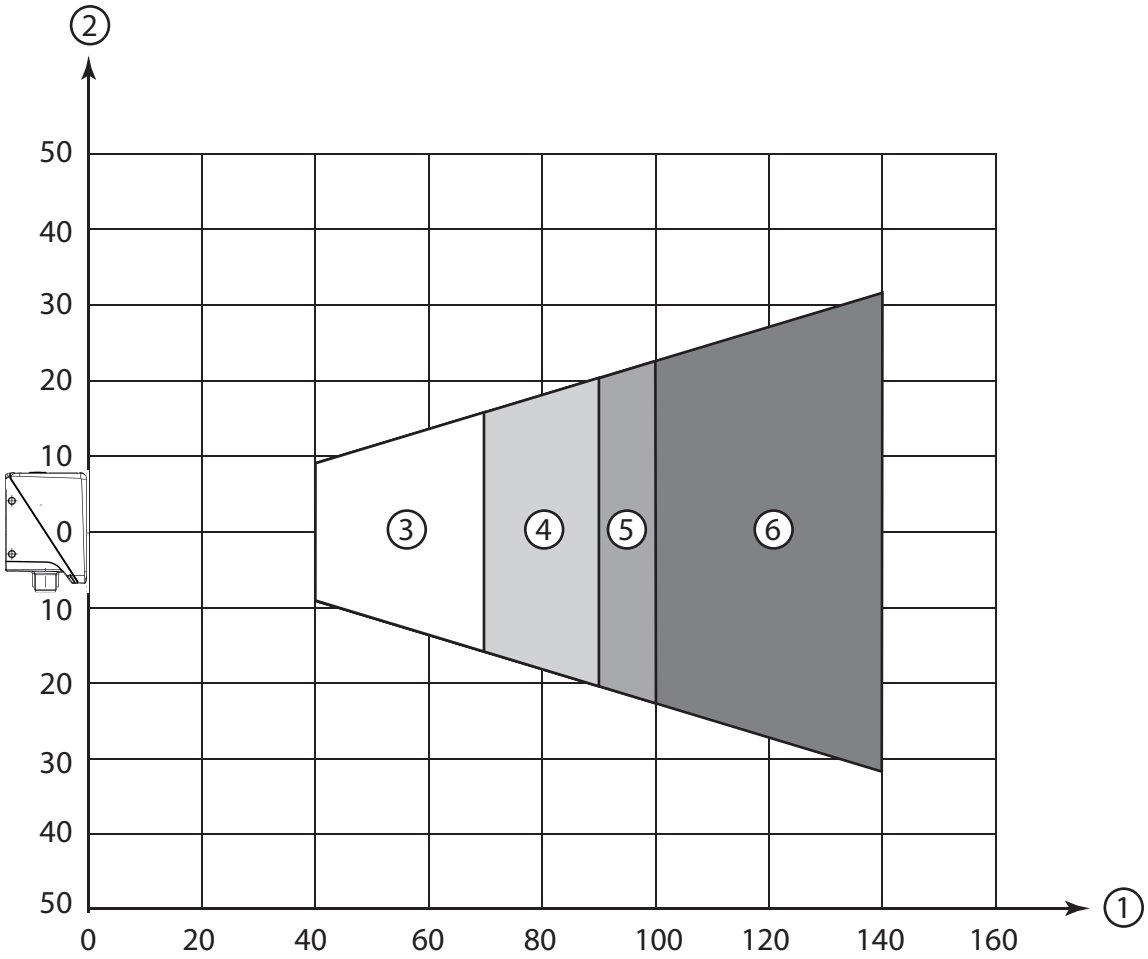

1 Reading distance [mm]
2 Reading field height [mm]
3 Resolution m1 = 0.127 mm (5 mil)
Reading field: 40 mm … 70 mm
4 Resolution m2 = 0.19 mm (7.5 mil)
Reading field: 40 mm … 90 mm
5 Resolution m3 = 0.25 mm (10 mil)
Reading field: 40 mm … 100 mm
6 Resolution m4 = 0.5 mm (20 mil)
Reading field: 40 mm … 140 mm

Fig. 6.7: N1-optics **1D-codes**

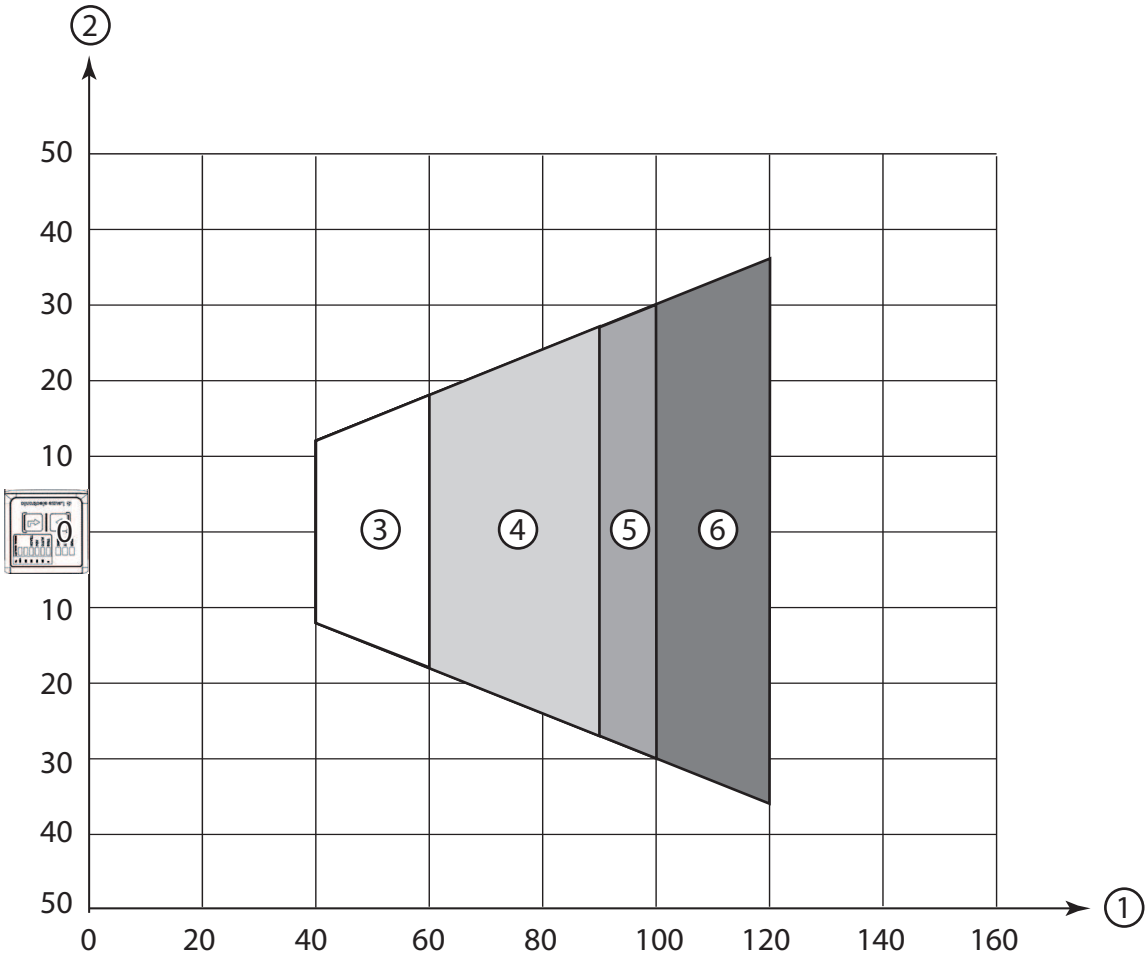

1 Reading distance [mm]
2 Reading field width [mm]
3 Resolution m1 = 0.127 mm (5 mil)
Reading field: 40 mm … 60 mm
4 Resolution m2 = 0.19 mm (7.5 mil)
Reading field: 40 mm … 90 mm
5 Resolution m3 = 0.25 mm (10 mil)
Reading field: 40 mm … 100 mm
6 Resolution m4 = 0.5 mm (20 mil)
Reading field: 40 mm … 120 mm

Fig. 6.8: N1-optics **2D-codes**

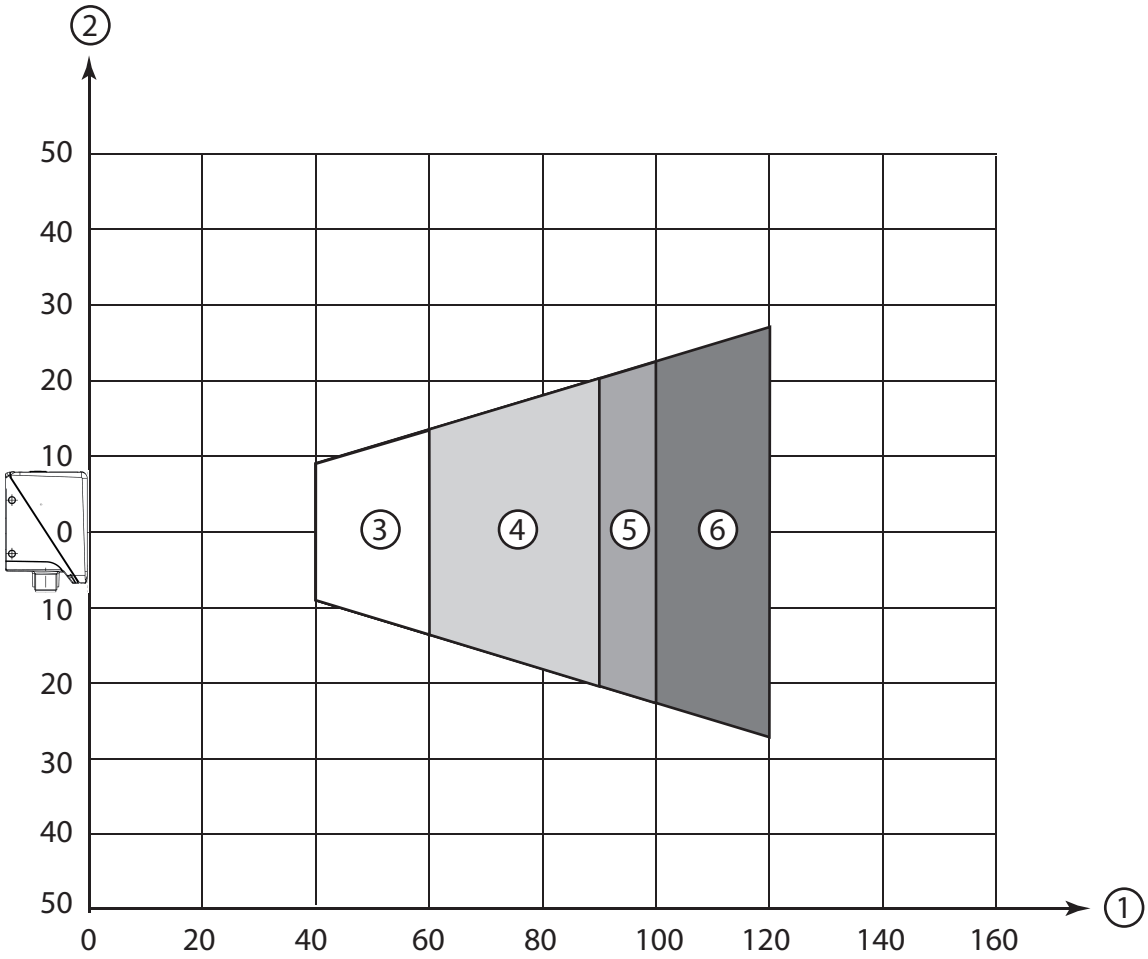

1 Reading distance [mm]
2 Reading field height [mm]
3 Resolution m1 = 0.127 mm (5 mil)
Reading field: 40 mm … 60 mm
4 Resolution m2 = 0.19 mm (7.5 mil)
Reading field: 40 mm … 90 mm
5 Resolution m3 = 0.25 mm (10 mil)
Reading field: 40 mm … 100 mm
6 Resolution m4 = 0.5 mm (20 mil)
Reading field: 40 mm … 120 mm

Fig. 6.9: N1-optics **2D-codes**

Reading distances for code reader with M1-optics

NOTICE	
	Please note that the actual reading distances are also influenced by factors such as labeling material, printing quality, reading angle, printing contrast etc., and may thus deviate from the reading distances specified here.

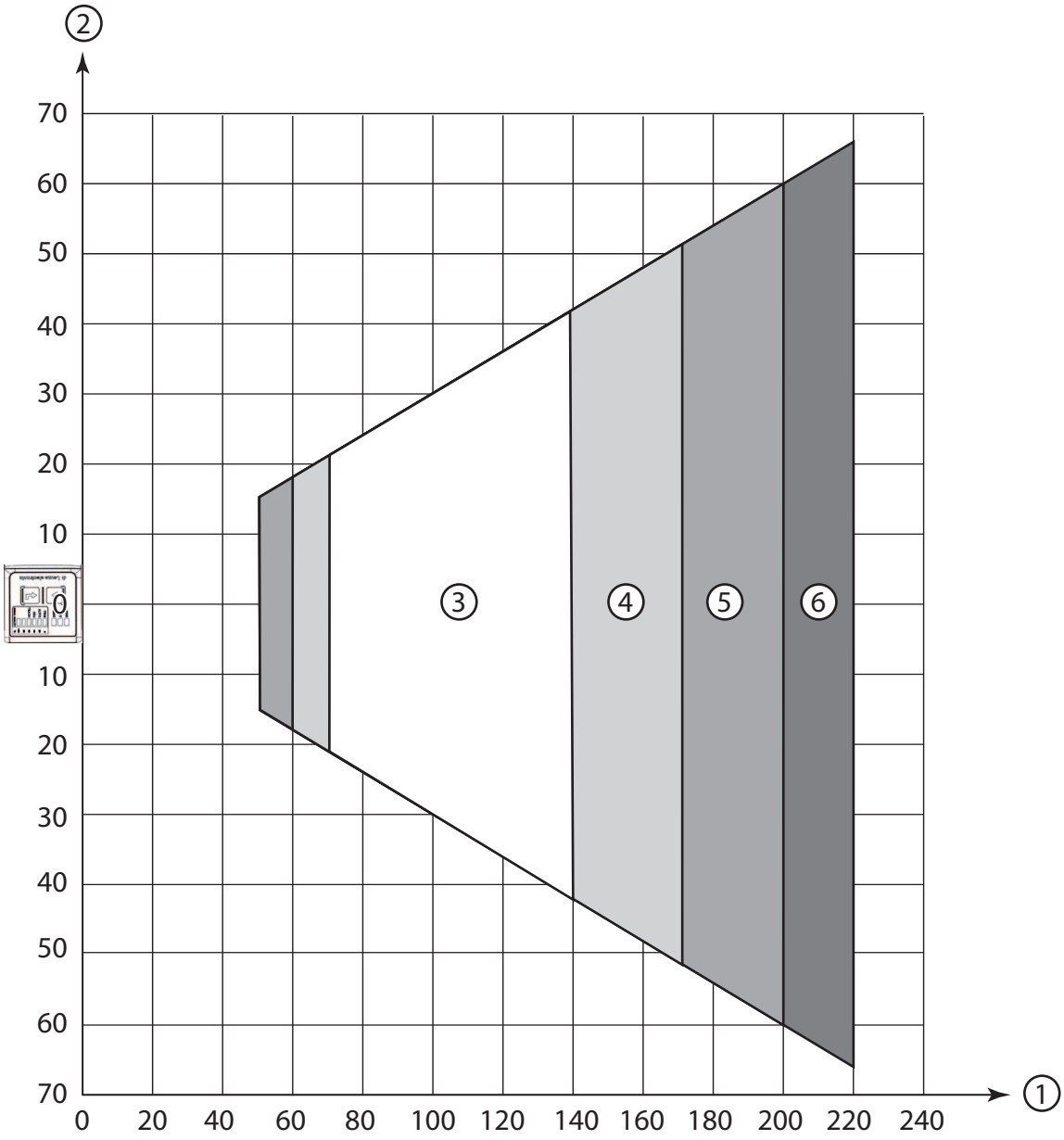

1 Reading distance [mm]
2 Reading field width [mm]
3 Resolution m1 = 0.19 mm (7.5 mil)
Reading field: 70 mm … 140 mm
4 Resolution m2 = 0.25 mm (10 mil)
Reading field: 60 mm … 170 mm
5 Resolution m3 = 0.35 mm (14 mil)
Reading field: 50 mm … 200 mm
6 Resolution m4 = 0.5 mm (20 mil)
Reading field: 50 mm … 220 mm

Fig. 6.10: M1-optics **1D-codes**

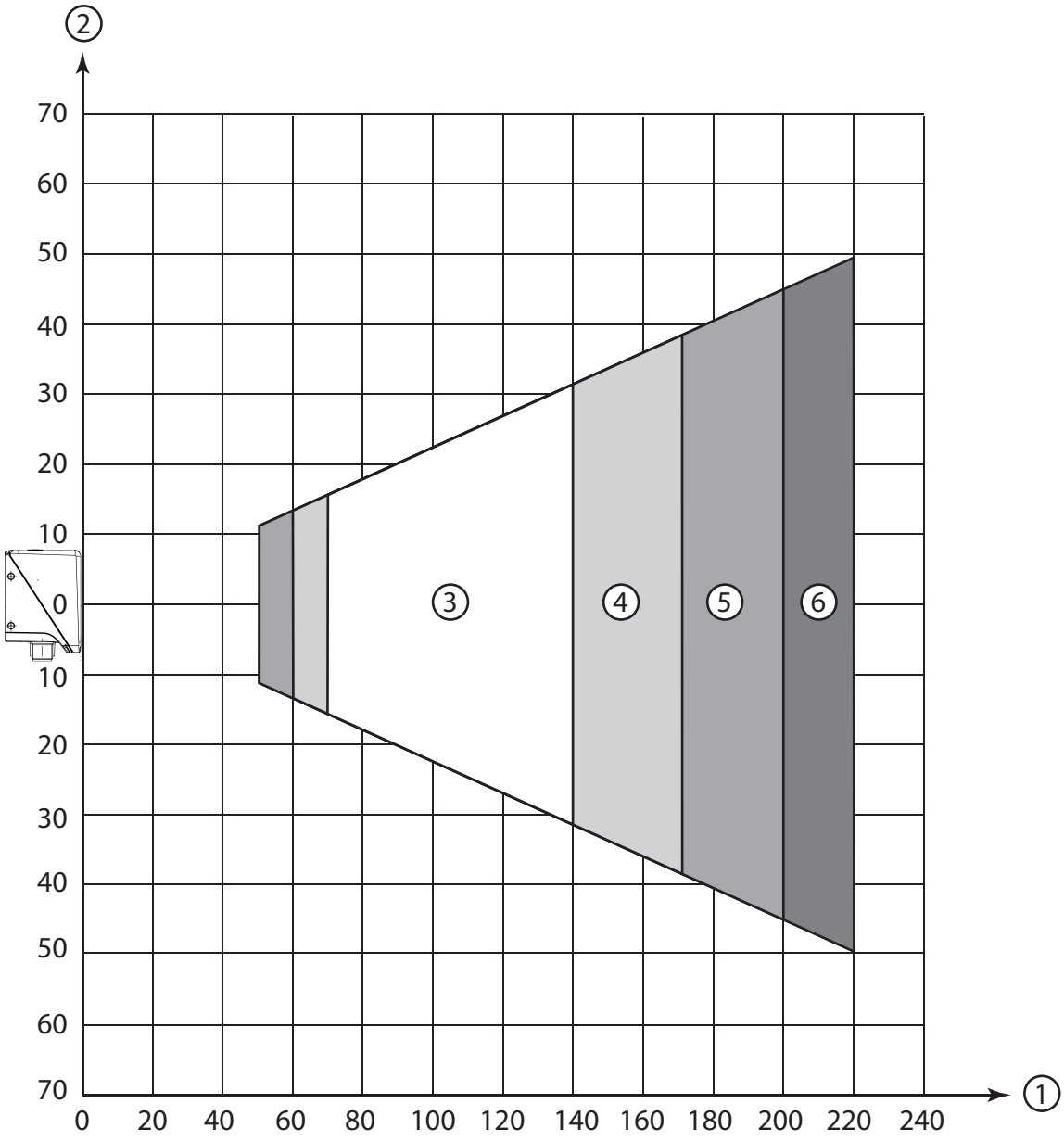

1 Reading distance [mm]
2 Reading field height [mm]
3 Resolution m1 = 0.19 mm (7.5 mil)
Reading field: 70 mm … 140 mm
4 Resolution m2 = 0.25 mm (10 mil)
Reading field: 60 mm … 170 mm
5 Resolution m3 = 0.35 mm (14 mil)
Reading field: 50 mm … 200 mm
6 Resolution m4 = 0.5 mm (20 mil)
Reading field: 50 mm … 220 mm

Fig. 6.11: M1-optics **1D-codes**

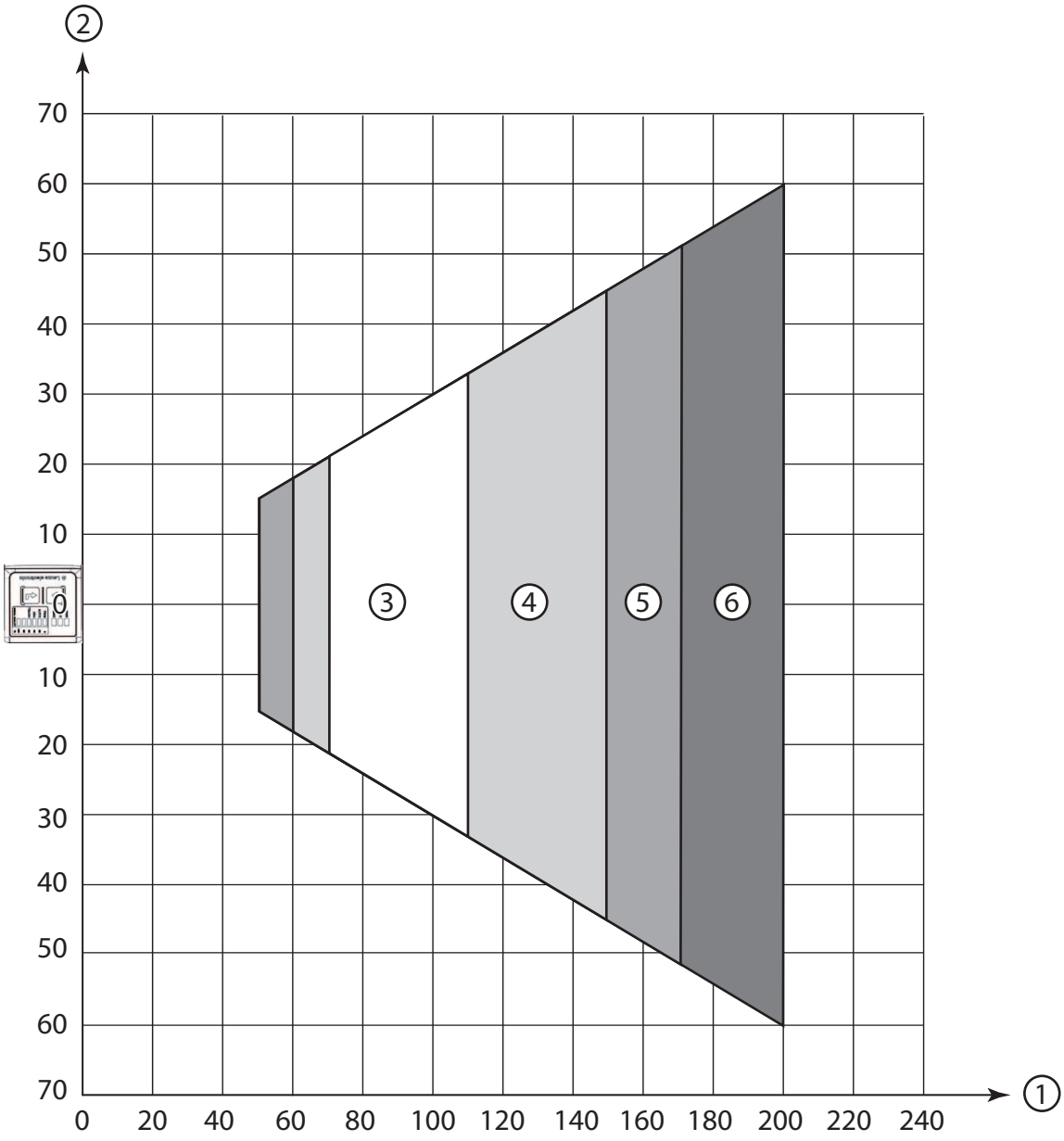

1 Reading distance [mm]
2 Reading field width [mm]
3 Resolution m1 = 0.19 mm (7.5 mil)
Reading field: 70 mm … 110 mm
4 Resolution m2 = 0.25 mm (10 mil)
Reading field: 60 mm … 150 mm
5 Resolution m3 = 0.35 mm (14 mil)
Reading field: 50 mm … 170 mm
6 Resolution m4 = 0.5 mm (20 mil)
Reading field: 50 mm … 200 mm

Fig. 6.12: M1-optics **2D-codes**

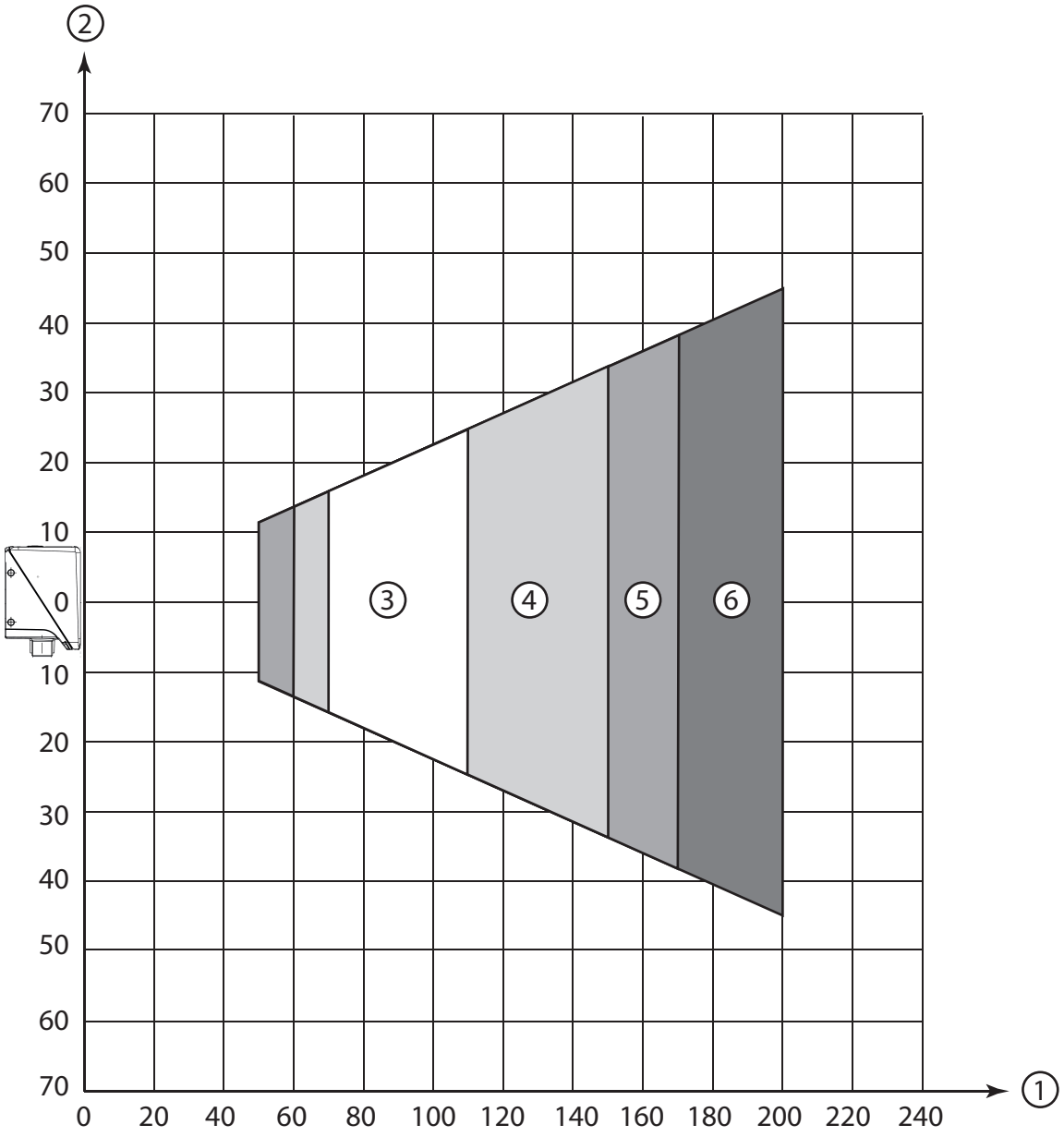

1 Reading distance [mm]

2 Reading field height [mm]

3 Resolution m1 = 0.19 mm (7.5 mil)
Reading field: 70 mm … 110 mm

4 Resolution m2 = 0.25 mm (10 mil)
Reading field: 60 mm … 150 mm

5 Resolution m3 = 0.35 mm (14 mil)
Reading field: 50 mm … 170 mm

6 Resolution m4 = 0.5 mm (20 mil)
Reading field: 50 mm … 200 mm

Fig. 6.13: M1-optics **2D-codes**

Reading distances for code reader with F-optics

NOTICE	
	Please note that the actual reading distances are also influenced by factors such as labeling material, printing quality, reading angle, printing contrast etc., and may thus deviate from the reading distances specified here.

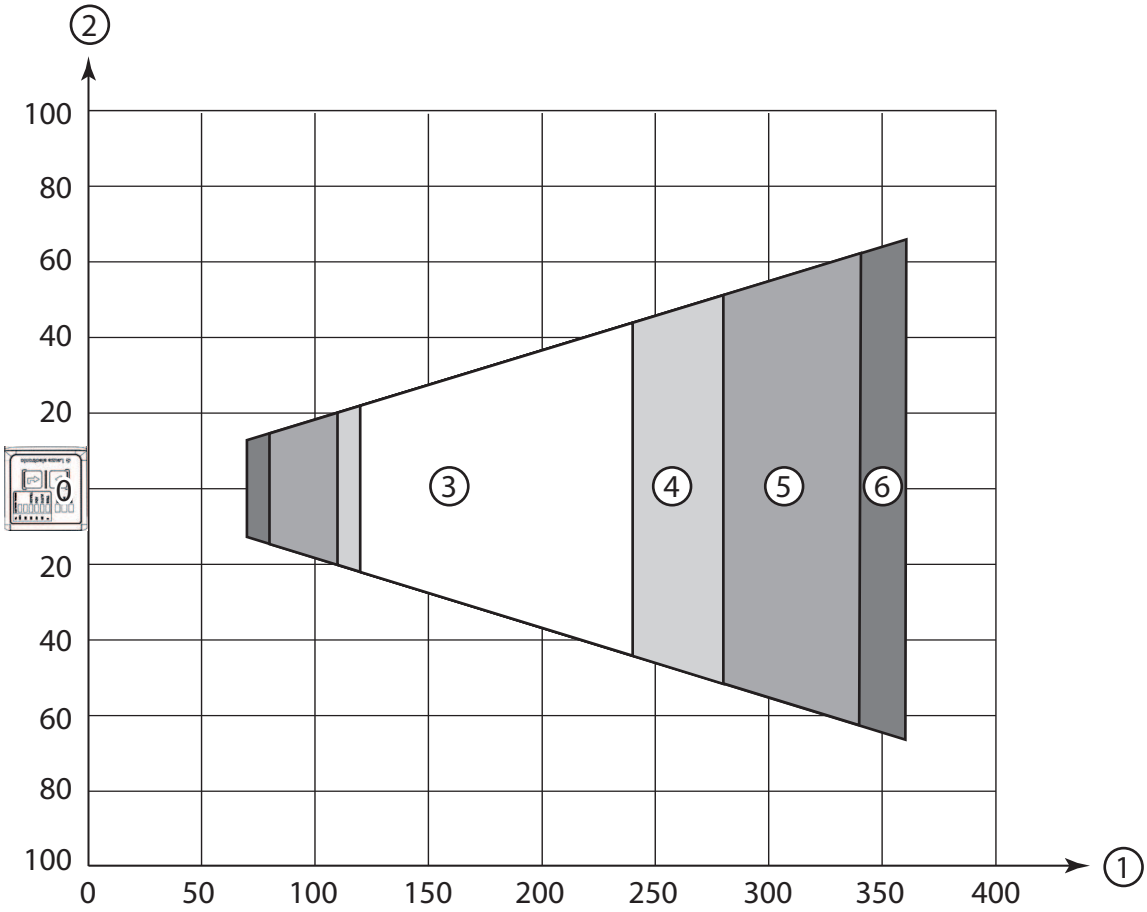

1 Reading distance [mm]
2 Reading field width [mm]
3 Resolution m1 = 0.19 mm (7.5 mil)
Reading field: 120 mm … 240 mm
4 Resolution m2 = 0.25 mm (10 mil)
Reading field: 110 mm … 280 mm
5 Resolution m3 = 0.35 mm (14 mil)
Reading field: 80 mm … 340 mm
6 Resolution m4 = 0.5 mm (20 mil)
Reading field: 70 mm … 360 mm

Fig. 6.14: F-optics **1D-codes**

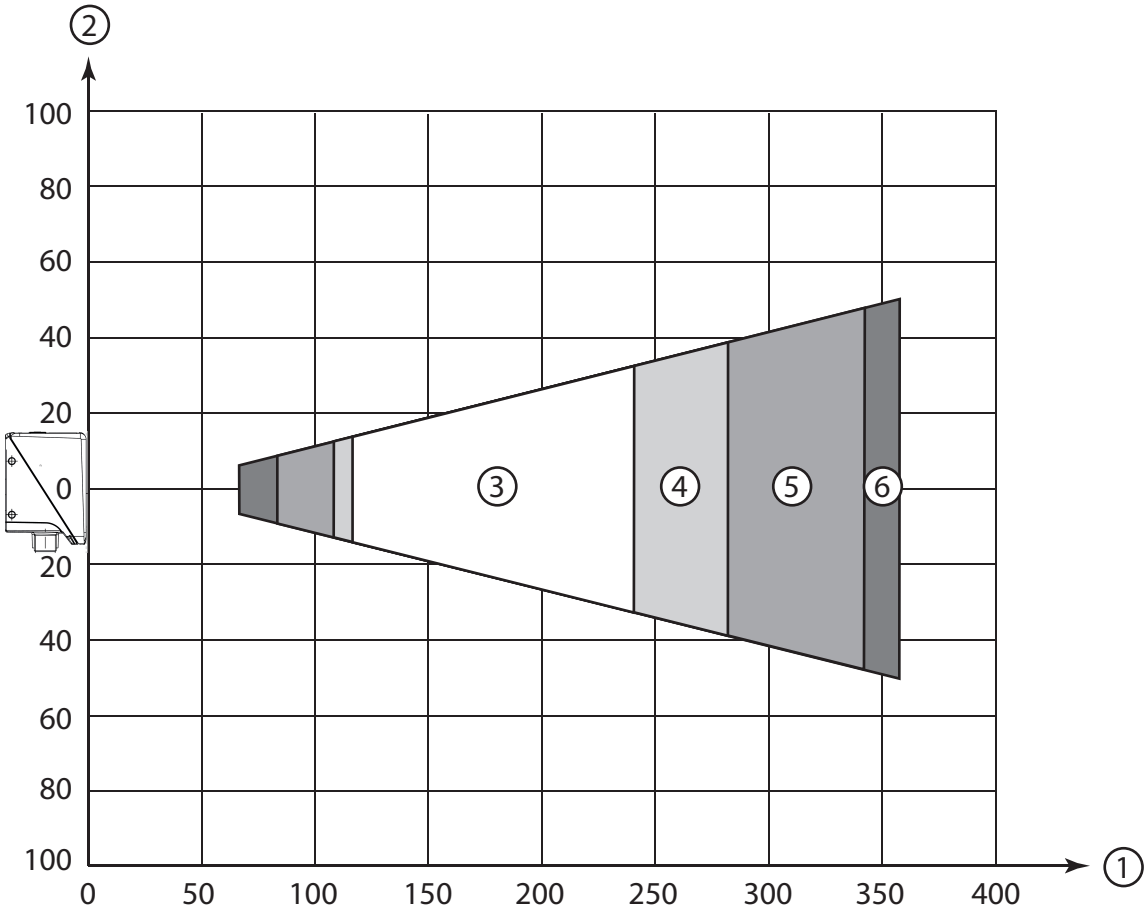

1 Reading distance [mm]
2 Reading field height [mm]
3 Resolution m1 = 0.19 mm (7.5 mil)
Reading field: 120 mm … 240 mm
4 Resolution m2 = 0.25 mm (10 mil)
Reading field: 110 mm … 280 mm
5 Resolution m3 = 0.35 mm (14 mil)
Reading field: 80 mm … 340 mm
6 Resolution m4 = 0.5 mm (20 mil)
Reading field: 70 mm … 360 mm

Fig. 6.15: F-optics **1D-codes**

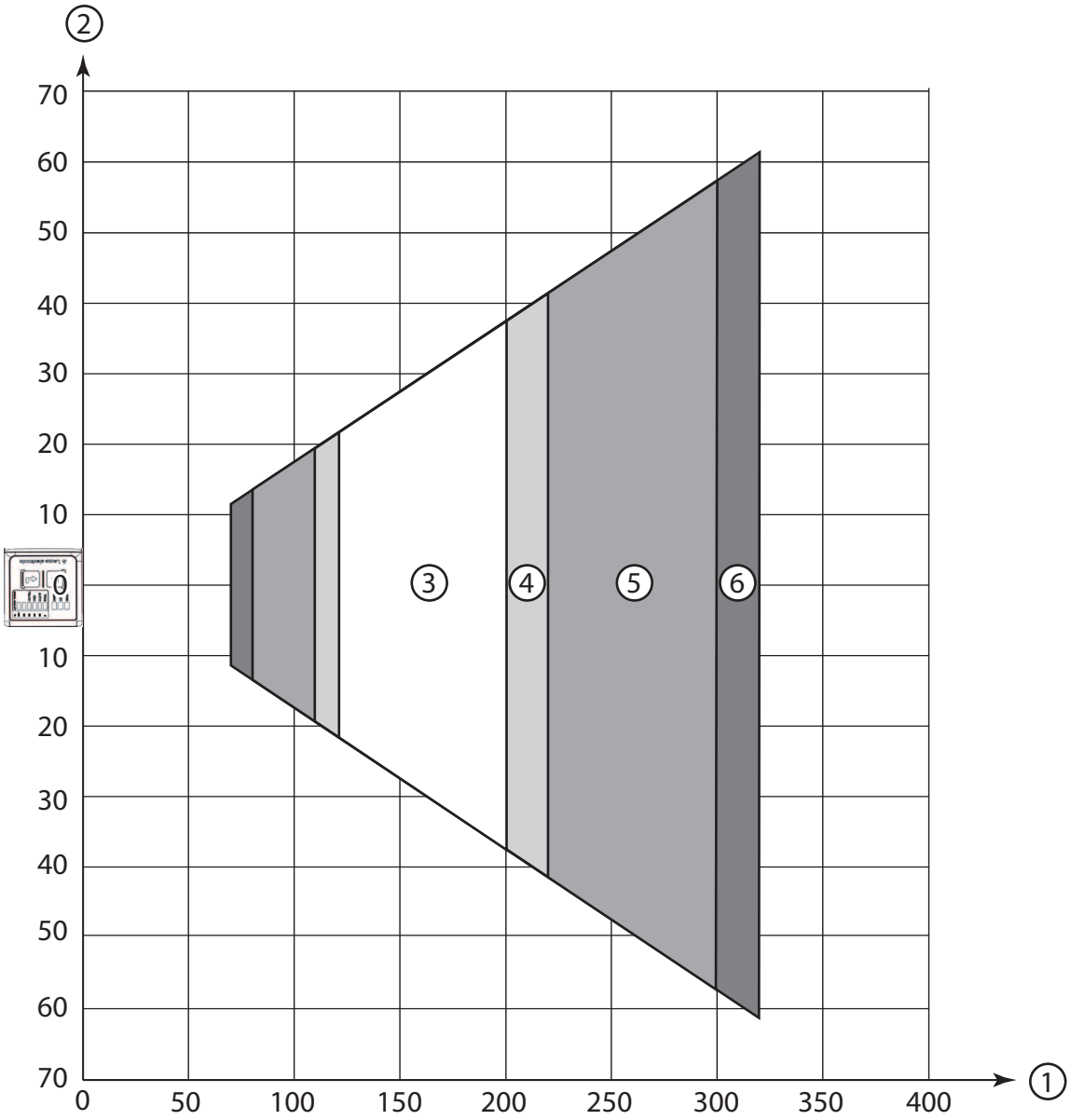

1 Reading distance [mm]
2 Reading field width [mm]
3 Resolution m1 = 0.19 mm (7.5 mil)
Reading field: 120 mm … 200 mm
4 Resolution m2 = 0.25 mm (10 mil)
Reading field: 110 mm … 220 mm
5 Resolution m3 = 0.35 mm (14 mil)
Reading field: 80 mm … 300 mm
6 Resolution m4 = 0.5 mm (20 mil)
Reading field: 70 mm … 320 mm

Fig. 6.16: F-optics **2D-codes**

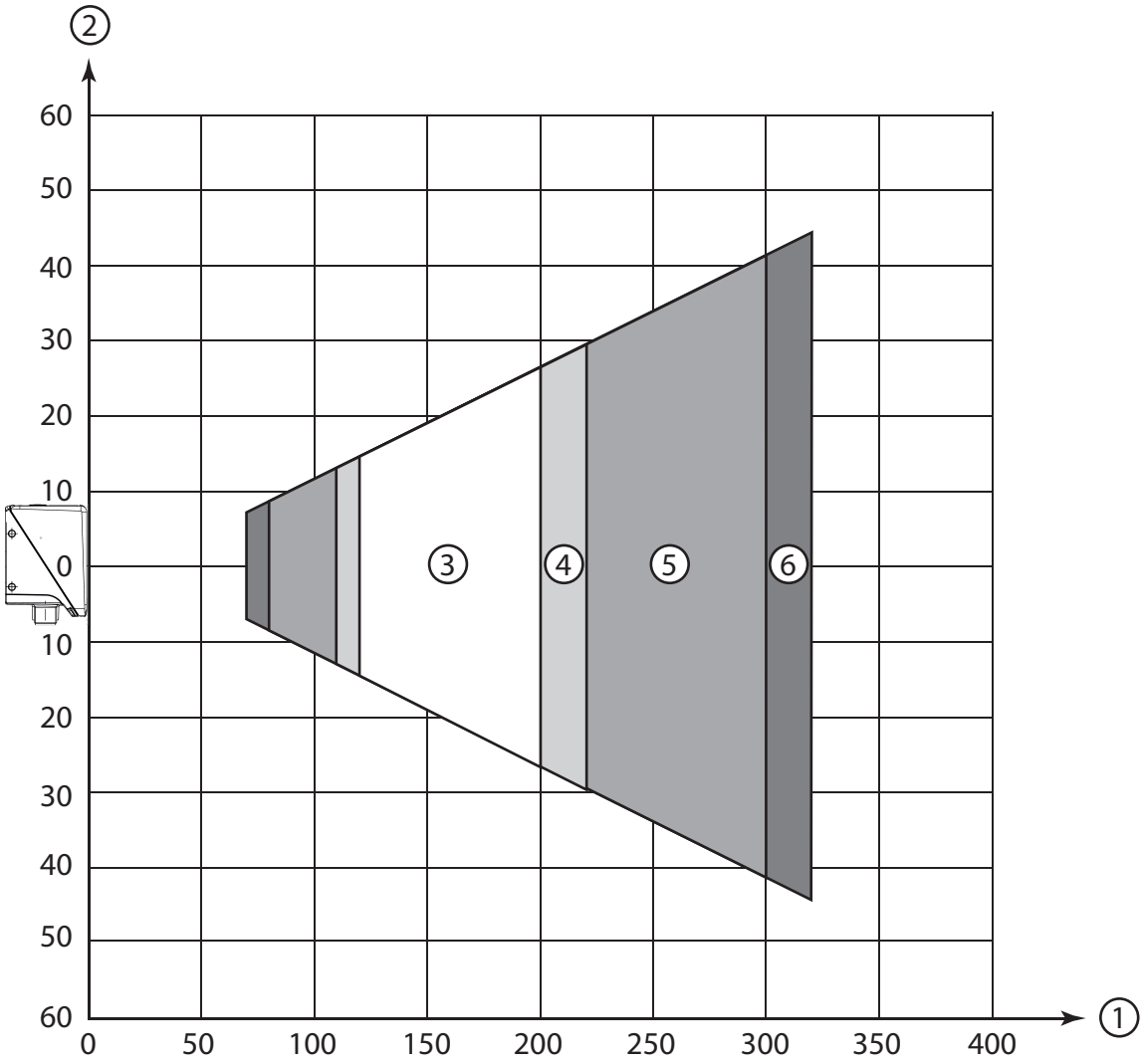

1 Reading distance [mm]
2 Reading field height [mm]
3 Resolution m1 = 0.19 mm (7.5 mil)
Reading field: 120 mm … 200 mm
4 Resolution m2 = 0.25 mm (10 mil)
Reading field: 110 mm … 220 mm
5 Resolution m3 = 0.35 mm (14 mil)
Reading field: 80 mm … 300 mm
6 Resolution m4 = 0.5 mm (20 mil)
Reading field: 70 mm … 320 mm

Fig. 6.17: F-optics **2D-codes**

Reading distances for code reader with L1-optics

NOTICE	
	Please note that the actual reading distances are also influenced by factors such as labeling material, printing quality, reading angle, printing contrast etc., and may thus deviate from the reading distances specified here.

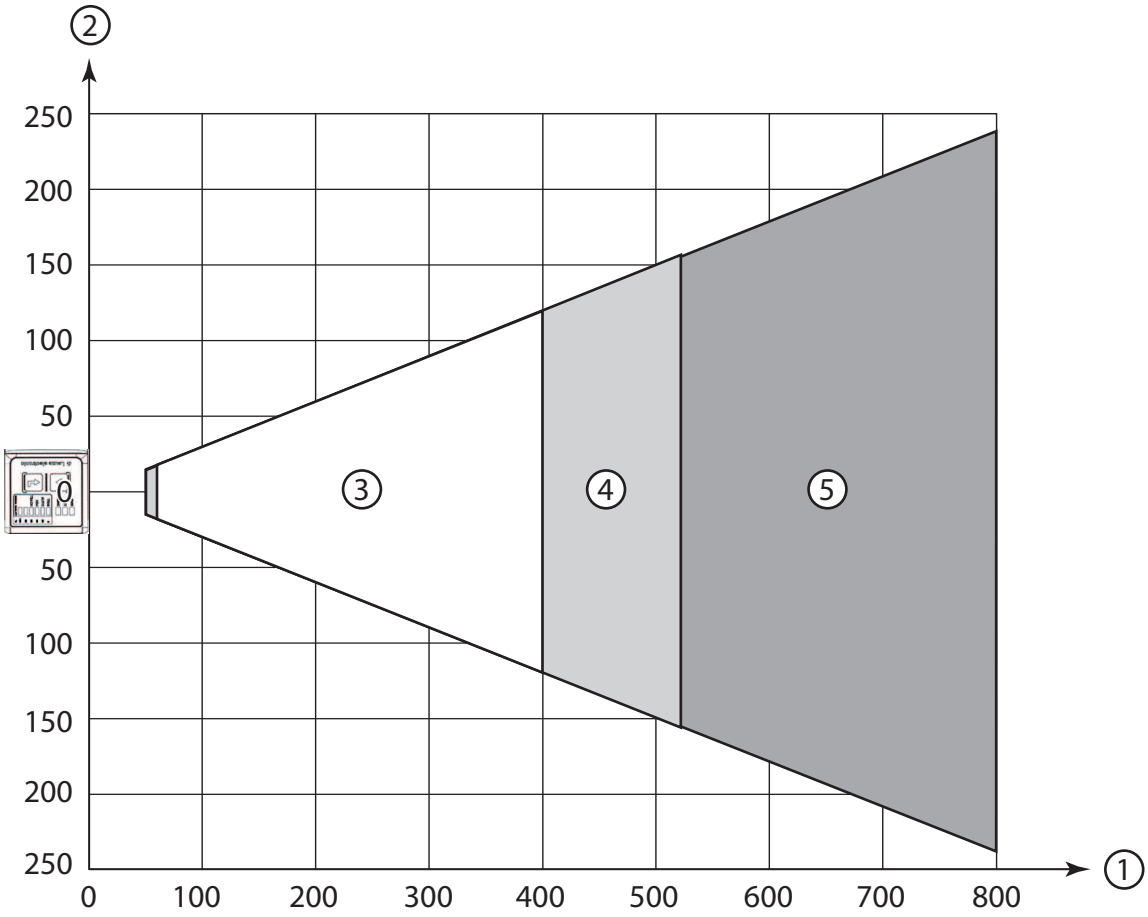

1 Reading distance [mm]
2 Reading field width [mm]
3 Resolution m1 = 0.35 mm (14 mil)
Reading field: 60 mm … 400 mm
4 Resolution m2 = 0.5 mm (20 mil)
Reading field: 50 mm … 520 mm
5 Resolution m3 = 1 mm (40 mil)
Reading field: 50 mm … 800 mm

Fig. 6.18: L1-optics **1D-codes**

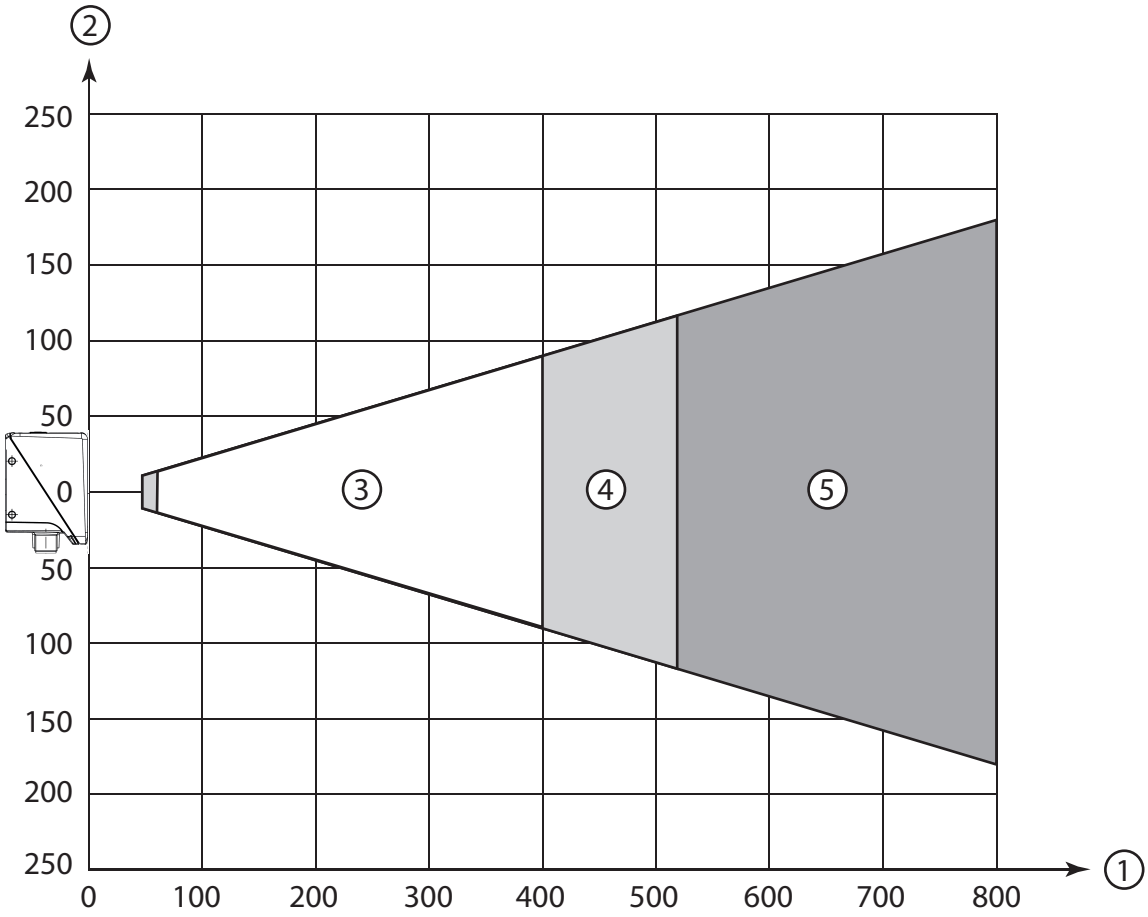

1 Reading distance [mm]
2 Reading field height [mm]
3 Resolution m1 = 0.35 mm (14 mil)
Reading field: 60 mm … 400 mm
4 Resolution m2 = 0.5 mm (20 mil)
Reading field: 50 mm … 520 mm
5 Resolution m3 = 1 mm (40 mil)
Reading field: 50 mm … 800 mm

Fig. 6.19: L1-optics **1D-codes**

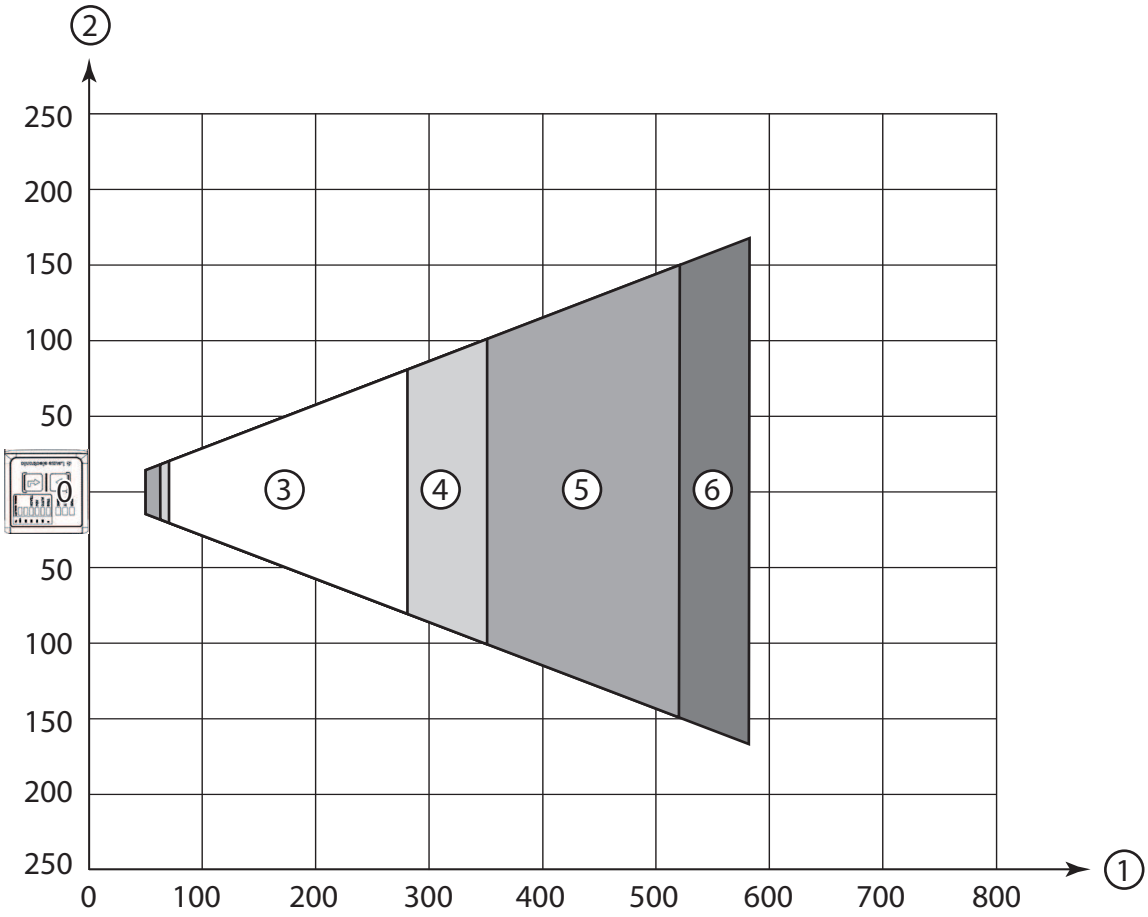

1 Reading distance [mm]
2 Reading field width [mm]
3 Resolution m1 = 0.35 mm (14 mil)
Reading field: 80 mm … 280 mm
4 Resolution m2 = 0.5 mm (20 mil)
Reading field: 60 mm … 350 mm
5 Resolution m3 = 0.8 mm (32 mil)
Reading field: 50 mm … 520 mm
6 Resolution m4 = 1 mm (40 mil)
Reading field: 50 mm … 580 mm

Fig. 6.20: L1-optics **2D-codes**

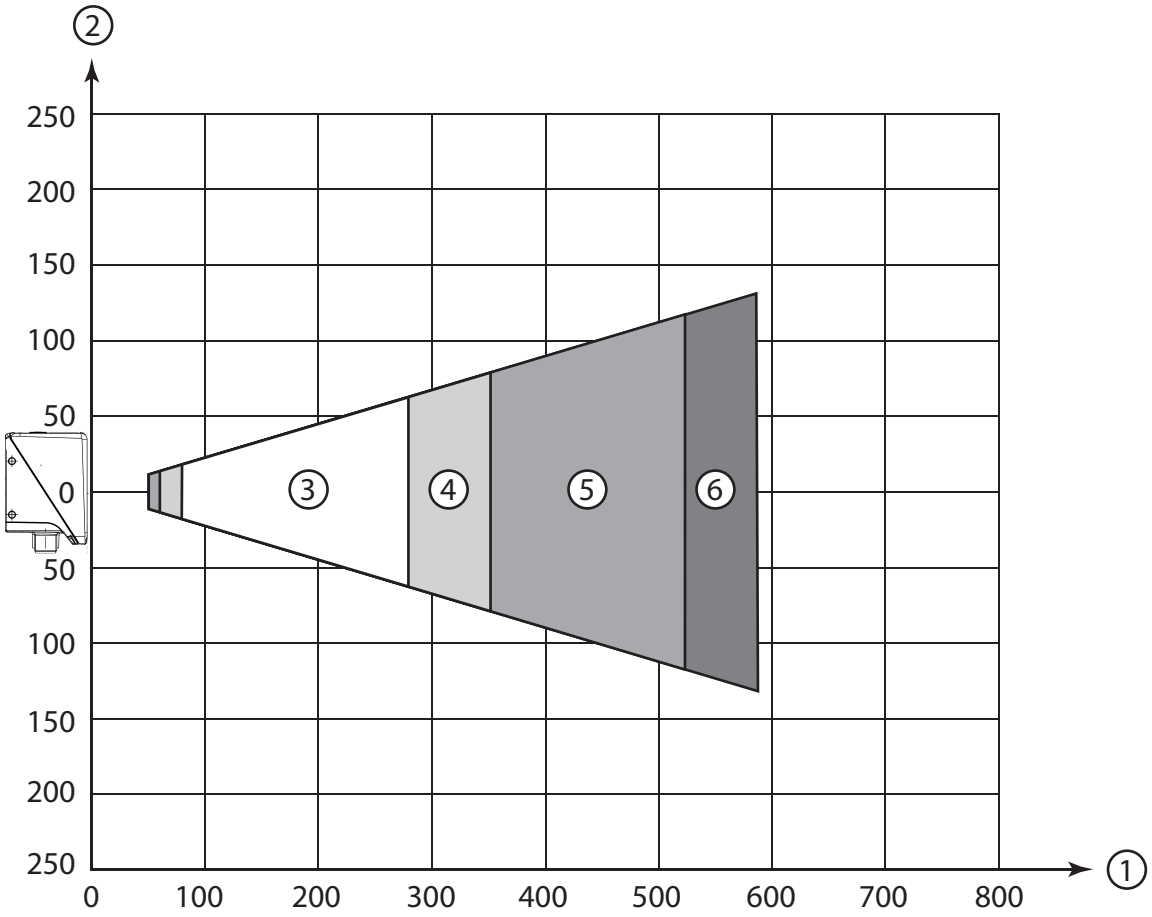

1 Reading distance [mm]
2 Reading field height [mm]
3 Resolution m1 = 0.35 mm (14 mil)
Reading field: 80 mm … 280 mm
4 Resolution m2 = 0.5 mm (20 mil)
Reading field: 60 mm … 350 mm
5 Resolution m3 = 0.8 mm (32 mil)
Reading field: 50 mm … 520 mm
6 Resolution m4 = 1 mm (40 mil)
Reading field: 50 mm … 580 mm

Fig. 6.21: L1-optics **2D-codes**

6.2 Mounting the code reader

	NOTICE
	Information on mounting the code reader can also be found in document "Quick Start Guide DCR 200i".

6.2.1 Mounting with M4 fastening screws

- Mount the device on the system with M4 fastening screws (not included in delivery contents).
  - Max. tightening torque of the fastening screws: 1.4 Nm
  - Location and thread depth of the mounting thread: see chapter 14.5 "Dimensioned drawings"

6.2.2 Mounting with the BTU 320M-D12 mounting system

Mounting with a BTU 320M-D12 mounting system is intended for 12-mm rod mounting. For ordering information, see chapter 15.5 "Other accessories".

- Mount the mounting system on the rod with the clamp profile (system-side).
- Mount the device to the mounting system with M4 fastening screws.
  - Max. tightening torque of the fastening screws: 1.4 Nm
  - Location and thread depth of the mounting thread: see chapter 14.5 "Dimensioned drawings"

6.2.3 Mounting with the BT 320M mounting bracket

Mounting with a BT 320M mounting bracket is intended for wall mounting. For ordering information, see chapter 15.5 "Other accessories".

- Mount the mounting bracket on the system side with M4 fastening screws (included in delivery contents).
- Mount the device to the mounting bracket with M4 fastening screws.
  - Max. tightening torque of the fastening screws: 1.4 Nm
  - Location and thread depth of the mounting thread: see chapter 14.5 "Dimensioned drawings"

ПРОМЭЛЕКТРОНИКА / sales@prom-elec.com

6.2.4 Mounting with the BTU 320M-D12-RL70 mounting bracket

Mounting using a BTU 320M-D12-RL70 mounting bracket is intended for 12 mm rod mounting in combination with the RL-70/40r-003-M12 ring light. For ordering information, see chapter 15.5 "Other accessories".

- Mount the ring light to the mounting bracket with M4 fastening screws.
- Mount the device to the mounting bracket with M4 fastening screws.
  - Max. tightening torque of the fastening screws: 1.4 Nm
  - Location and thread depth of the mounting thread: see chapter 14.5 "Dimensioned drawings"
- Mount the mounting bracket on the rod with the clamp profile (system-side).

6.3 Replace housing hood

In individual cases, you can exchange the housing hood of the code reader, e.g., if the protective screen is scratched or if changed operating conditions necessitate a housing hood with polarization filter. For ordering information, see chapter 15.3 "Optical accessories".

	NOTICE
	Replacement of housing hood not permitted with stainless steel housing! ↳ On devices with stainless steel housing, it is not permitted to replace the housing hood.

	NOTICE
	Only replace the housing hood while the device is in a de-energized state! Only replace the housing hood if no voltage is being applied to the device. ↳ Disconnect the device from the voltage supply before replacing the device hood.

	NOTICE
	Check the seal before mounting! ↳ Check the seal on the base of the code reader housing for cleanliness before mounting the new housing hood.

	NOTICE
	Clean the new housing hood before mounting! ↳ Clean the new housing hood with a soft cloth before mounting.

- ↳ Loosen the four fastening screws of the housing hood.
- ↳ First tip the housing hood downward and away from the housing base.
- ↳ Then lift the housing hood up and off of the housing base.
- ↳ Then mount the new housing hood in the reverse order. The tightening torque of the fastening screws is 0.25 Nm.

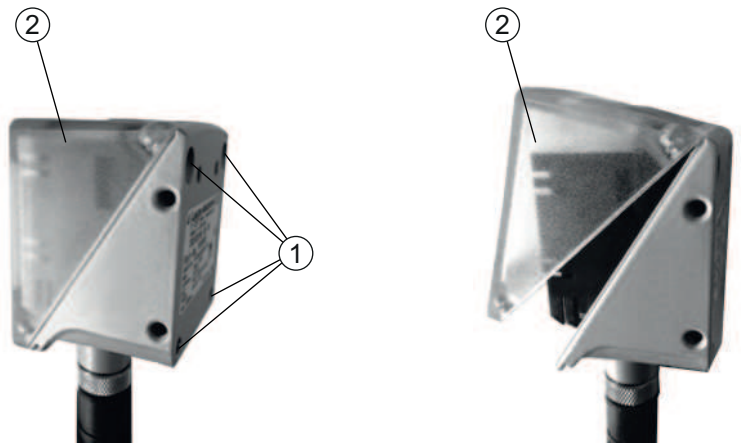

1 Fastening screws
2 Housing hood

Fig. 6.22: Replace housing hood

6.4 Attaching the diffusor foil

To reduce interfering reflections, you can attach a diffusor foil to the screen of the housing hood.

	NOTICE
!	**Do not use diffusor foil in combination with polarization filter!** The diffusor foil is not suitable for use in combination with the polarization filter.

	NOTICE
!	**Only attach diffusor foil to dust- and grease-free surface!** ↳ Before attaching the foil, make certain that the surface is free of dust and grease.

↳ Make certain that the diffusor foil is correctly oriented.
Small recess at top, large recess at bottom.

Fig. 6.23: Orientation of the diffusor foil

↳ Attach the diffusor foil to the housing screen from bottom to top.

Fig. 6.24: Attaching the diffusor foil

	NOTICE
!	**Avoid air bubbles when attaching the diffusor foil!** ↳ When attaching the diffusor foil, take care to prevent bubbles from forming under the film.

7 Electrical connection

CAUTION

Safety notices!

- Before connecting the device, please ensure that the operating voltage matches the value printed on the nameplate.
- Only allow competent persons to perform the electrical connection.
- Ensure that the functional earth (FE) is connected correctly.
  Fault-free operation is only guaranteed if the functional earth is connected properly.
- If faults cannot be rectified, take the device out of operation. Protect the device from accidentally being started.

CAUTION

UL applications!

For UL applications, use is only permitted in Class 2 circuits in accordance with the NEC (National Electric Code).

NOTICE

Shielding connection!

The shielding is connected via the M12 connector housing.

NOTICE

Protective Extra Low Voltage (PELV)!

The device is designed in accordance with protection class III for supply with PELV (Protective Extra-Low Voltage).

NOTICE

Degrees of protection IP65 or IP67/69K!

Degree of protection IP65 or IP67/69K (with devices with stainless steel housing) is achieved only if the connectors and caps are screwed into place.

7.1 Overview

The code reader is provided with the following connections:

- PWR / SWIO: A-coded, 12-pin, M12 connection for operating voltage, switching inputs/outputs, RS 232/RS 422 interface
- HOST: D-coded, 4-pin, M12 connection for the Ethernet connection

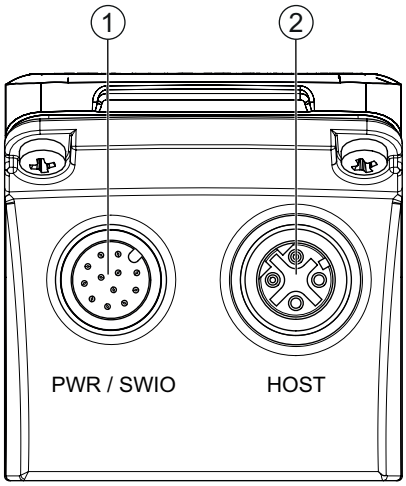

1 PWR / SWIO, M12 plug, 12-pin, A-coded
2 HOST, M12 socket, 4-pin, D-coded

Fig. 7.1: Electrical connections

NOTICE	
	Ready-made cables are available for all connections (see chapter 15.4 "Cables accessories").

Voltage supply, RS 232/RS 422 and switching inputs/outputs

The voltage supply (18 V … 30 V DC) is connected at the PWR / SWIO M12 plug.

The RS 232/RS 422 interface on the PWR / SWIO M12 plug is directly connected to the host.

To connect to other fieldbus systems, e.g., PROFIBUS, PROFINET, EtherCAT, etc., Leuze electronic offers various connection units (see chapter 7.6 "Connecting code reader to fieldbus").

Four freely programmable switching inputs/outputs for individual adaptation to the respective application are also available on the PWR / SWIO M12 plug.

Standalone operation in Ethernet network

The code reader is operated as a "stand-alone" single device in an Ethernet star topology with individual IP address. The host interface of the superior system is connected to the HOST M12 socket.

7.2 PWR / SWIO

7.2.1 Voltage supply / switching inputs/outputs / RS 232/RS 422

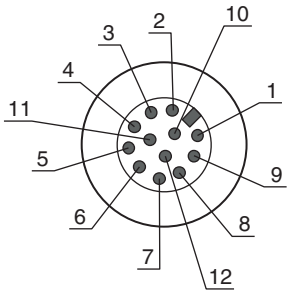

Fig. 7.2: PWR / SWIO connection

12-pin M12 connector (A-coded)

Tab. 7.1: PWR / SWIO pin assignment

Pin	Designation	Core color	Assignment
1	VIN	Brown	+18 … +30 V DC operating voltage
2	GNDIN	Blue	Negative operating voltage (0 V DC)
3	SWI1	White	Digital switching input 1 (default: "Trigger")
4	SWO2	Green	Digital switching output 2 (default: "Good Read")
5	FE	Pink	Functional earth
6	GNDOUT	Yellow	Ground reference RS 232/RS 422
7	RX-	Black	RS 422: RX- signal
8	TX-	Gray	RS 422: TX- signal
9	RXD/RX+	Red	RS 232: RXD signal RS 422: RX+ signal
10	TXD/TX+	Violet	RS 232: TXD signal RS 422: TX+ signal
11	SWIO3	Gray/pink	Digital switching input/output 3 (configurable) (default: switching output "No read")
12	SWIO4	Red/blue	Digital switching input/output 4 (configurable) (default: switching output "Device ready")
Thread (M12 connector)	FE (functional earth)		Connection cable shield. The shield of the connection cable is on the thread of the M12 plug.

NOTICE

The core colors only apply if Leuze electronic's original connection cables are used (see chapter 15.4 "Cables accessories").

CAUTION

UL applications!

For UL applications, use is only permitted in Class 2 circuits in accordance with the NEC (National Electric Code).

Switching input/output

The code reader features four freely programmable switching inputs/outputs: SWI1, SWO2, SWIO3 and SWIO4.

	NOTICE
	The function as switching input or switching output is set via the webConfig configuration tool (**CONFIGURATION > DEVICE > Switching inputs/outputs**, see chapter 9 "Commissioning – Leuze electronic webConfig tool").

The four switching inputs/outputs are configured by default as follows:

- SWI1

  Trigger switching input (default)
- SWO2

  GOOD READ switching output (default)
- SWIO3

  As switching output: NO READ (default)
- SWIO4

  As switching output: device ready (default)

Function as switching input

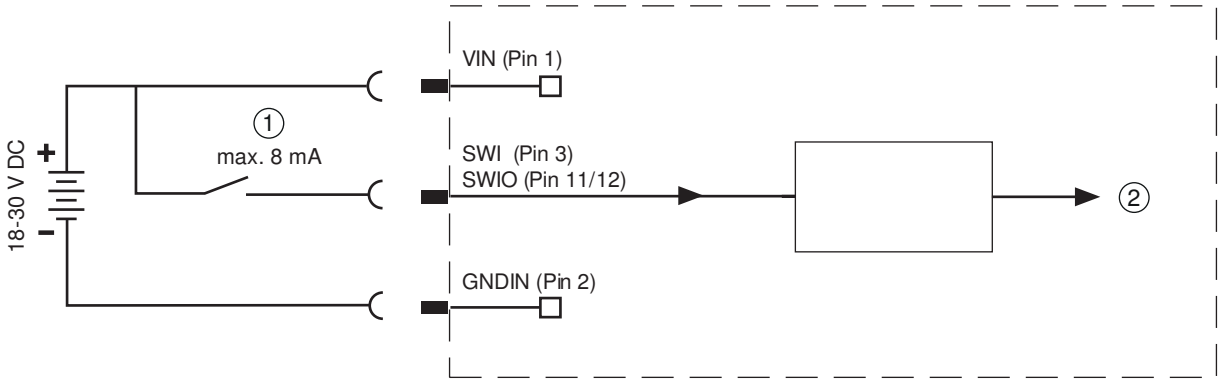

1 Switching input

2 Switching input to controller

Fig. 7.3: Switching input SWIO3 and SWIO4 connection

	NOTICE
	Maximum input current! ↳ The input current of the respective switching input is maximum 8 mA.

Function as switching output

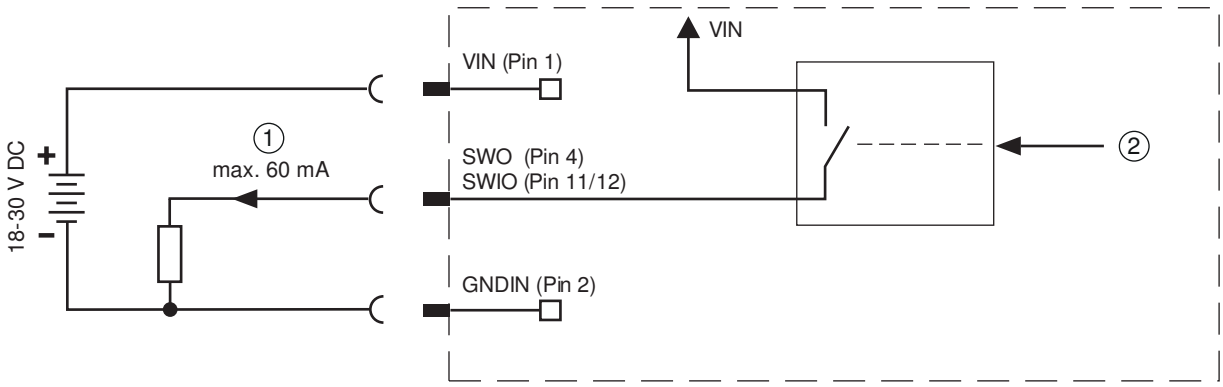

1 Switching output
2 Switching output from controller

Fig. 7.4: Switching output SWIO3 and SWIO4 connection

NOTICE	
!	**Maximum loading of the switching outputs!** ↳ Do not load the respective switching output of the code reader with more than 60 mA at +18 V … +30 V DC in normal operation. ↳ Each configured switching output is short-circuit proof.

NOTICE	
!	**SWIO3 and SWIO4 as switching output!** ↳ Do not operate pins 2 and 4 as switching output if sensors which function as switching input are also connected to these pins. ⇨ If, for example, the inverted sensor output is connected to pin 2, and pin 2 of the code reader is, at the same time, configured as a switching output (and not as a switching input), the switching output malfunctions.

RS 232/RS 422 interface

The RS 232/RS 422 interface is used primarily for outputting the read and decoded code contents of the activated code types.

7.2.2 Voltage supply / NPN switching inputs/outputs / RS 232/RS 422

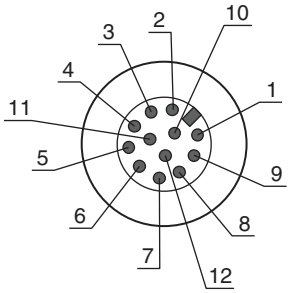

Fig. 7.5: PWR / SWIO connection

12-pin M12 connector (A-coded)

Tab. 7.2: PWR / SWIO pin assignment

Pin	Designation	Core color	Assignment
1	VIN	Brown	+18 … +30 V DC operating voltage
2	GNDIN	Blue	Negative operating voltage (0 V DC)
3	SWI1	White	NPN digital switching input 1 (default: "Trigger")
4	SWO2	Green	NPN digital switching output 2 (default: "Good Read")
5	FE	Pink	Functional earth
6	GNDOUT	Yellow	Ground reference RS 232/RS 422
7	RX-	Black	RS 422: RX- signal
8	TX-	Gray	RS 422: TX- signal
9	RXD/RX+	Red	RS 232: RXD signal RS 422: RX+ signal
10	TXD/TX+	Violet	RS 232: TXD signal RS 422: TX+ signal
11	SWI3	Gray/pink	NPN digital switching input 3 (default: "No function")
12	SWO4	Red/blue	Digital switching output 4 (default: "Device ready")
Thread (M12 connector)	FE (functional earth)		Connection cable shield. The shield of the connection cable is on the thread of the M12 plug.

NOTICE

The core colors only apply if Leuze electronic's original connection cables are used (see chapter 15.4 "Cables accessories").

CAUTION

UL applications!

For UL applications, use is only permitted in Class 2 circuits in accordance with the NEC (National Electric Code).

Switching inputs/outputs

The code reader is equipped with two freely programmable switching inputs SWI1 and SWI3 as well as with two freely programmable switching outputs SWO2 and SWO4.

	NOTICE
	The function of switching inputs or switching outputs is set via the webConfig configuration tool (**CONFIGURATION > DEVICE > Switching inputs/outputs**, see chapter 9 "Commissioning – Leuze electronic webConfig tool").

Function as switching input

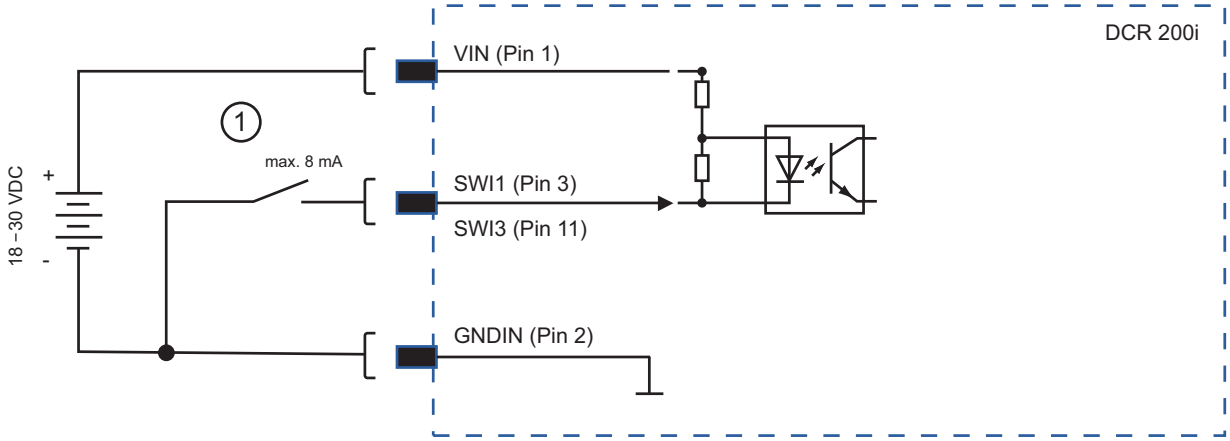

1 Switching input

Fig. 7.6: Switching input SWI1 and SWI3 connection

	NOTICE
	Maximum input current! ↳ If the NPN input is pulled to GND, the current is max. 8 mA.

Function as switching output

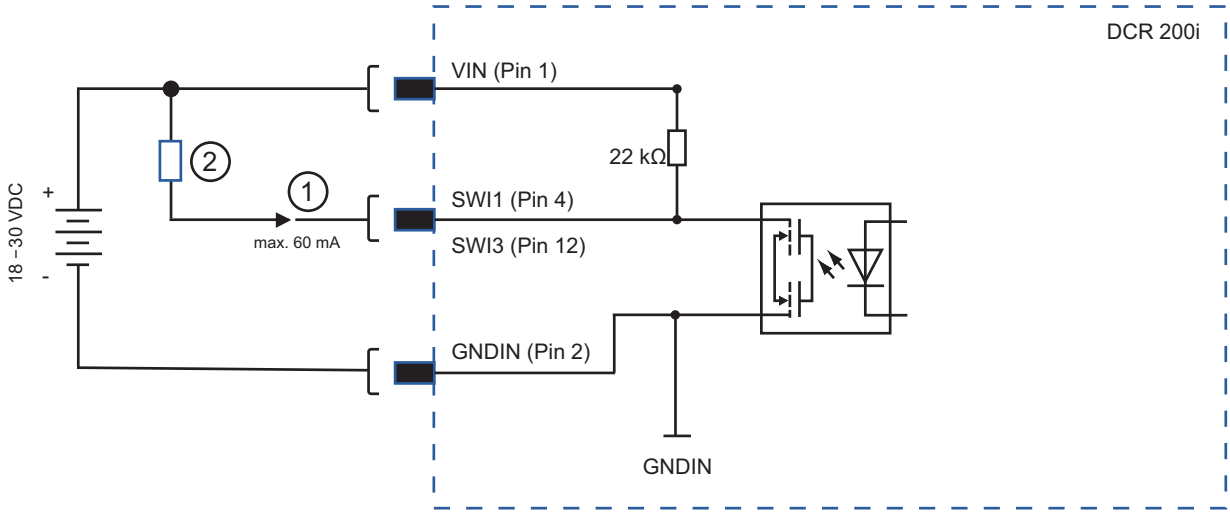

1 Switching output
2 Load or control

Fig. 7.7: Switching output SWO2 and SWO4 connection

NOTICE	
!	**Maximum loading of the switching outputs!** ↳ Do not load the respective switching output of the code reader with an input current of more than 60 mA at +18 V … +30 V DC in normal operation. ↳ Each switching output is short-circuit proof.

RS 232/RS 422 interface

The RS 232/RS 422 interface is used primarily for outputting the read and decoded code contents of the activated code types.

7.3 HOST - Host input / Ethernet

4-pin, M12 socket (D-coded) for connecting to HOST.

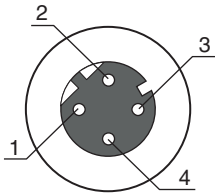

Fig. 7.8: HOST connection

Tab. 7.3: HOST pin assignment

Pin/terminal	Designation	Assignment
1	TD+	Transmit Data +
2	RD+	Receive Data +
3	TD-	Transmit Data -
4	RD-	Receive Data -
Thread (M12 socket)	FE (functional earth)	Connection cable shield. The shield of the connection cable is on the thread of the M12 socket.

NOTICE

Use ready-made cables!

↳ If possible, use the ready-made cables from Leuze electronic (see chapter 15.4 "Cables accessories").

7.4 Ethernet star topology

The code reader is operated as a "stand-alone" single device in an Ethernet star topology with individual IP address.

- The code reader is designed as an Ethernet device with a standard baud rate of 10/100 Mbit.
- A fixed MAC address is assigned to each device by the manufacturer; this address cannot be changed.
- The device automatically supports the transmission rates of 10 Mbit/s (10BASE T) and 100 Mbit/s (10BASE TX), as well as auto-negotiation and auto-crossover.
- The device supports the following protocols and services:
  - TCP / IP (client/server)
  - UDP
  - DHCP
  - ARP
  - PING
- For communication with the superior host system, the corresponding TCP/IP protocol (client/server mode) or UDP must be selected.

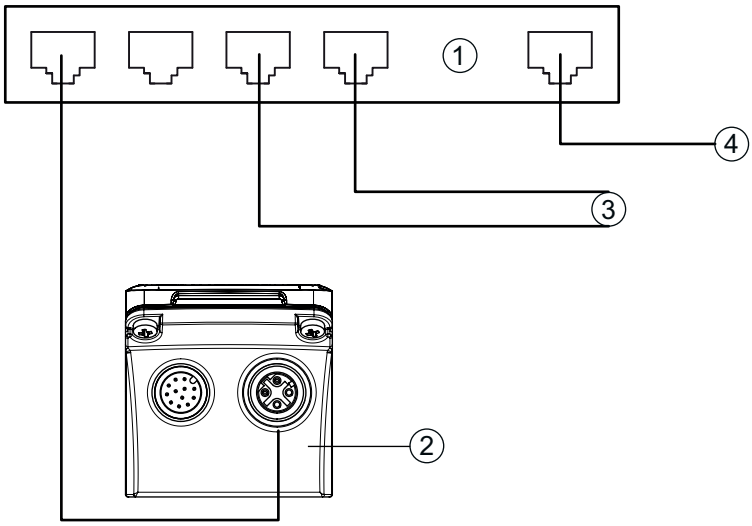

1 Ethernet switch
2 Code reader of the DCR 200i series
3 Other network participants
4 Host interface - PC/control

Fig. 7.9: Ethernet star topology

Ethernet cable assignment

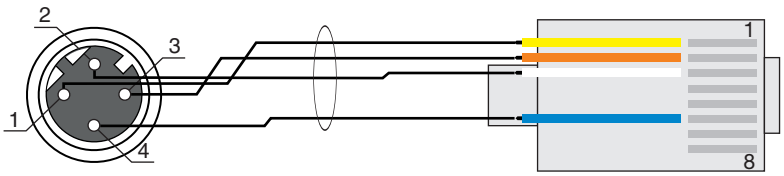

Fig. 7.10: HOST to RJ-45 cable assignments

Designed as shielded cable, max. 100 m.

Pin (M12)	Designation	Pin/core color (RJ45)
1	TD+	1/yellow
2	RD+	3/white
3	TD-	2/orange
4	RD-	6/blue

NOTICE

Self-configured cables with Ethernet interface!

- Ensure adequate shielding.
- The entire interconnection cable must be shielded and earthed.
- The RD+/RD- and TD+/TD- wires must be stranded in pairs.
- Use at least a CAT 5 cable for the connection.

7.5 Cable lengths and shielding

Observe the maximum cable lengths and the shielding types:

Connection	Interface	Max. cable length	Shielding
DCR 200i host	RS 232 RS 422	10 m 1200 m (dependent on baud rate)	Shielding absolutely necessary RS 422 conductors, stranded in pairs
Network from the first DCR 200i to the last network participant	Ethernet	Max. segment length: 100 m for 100BASE-TX twisted pair (min. CAT 5)	Shielding absolutely necessary
Switching input		10 m	Not necessary
Switching output		10 m	Not necessary
DCR 200i power supply unit		30 m	Not necessary

7.6 Connecting code reader to fieldbus

The code reader can be connected to the following fieldbuses via the MA 2xxi modular connection units:

- CANopen: MA 235i
- EtherCAT: MA 238i
- EtherNet/IP: MA 258i
- DeviceNET: MA 255i
- PROFIBUS: MA 204i
- PROFINET: MA 248i

	NOTICE
	Ready-made cables are available for connecting the code reader to a modular connection unit (see chapter 15.4 "Cables accessories").

7.7 Connecting code reader to MA 150 connection unit

The signals from the code reader are distributed in the machine decentrally via the MA 150 modular connection unit. The following components can be connected to the MA 150 connection unit:

- Code reader of the DCR 200i series
- Photoelectric sensor/diffuse sensor to activate the code reader
- Voltage supply
- External illumination
- Serial communication RS 232/RS 422

Circuit diagram example for electrical installation with MA 150 connection unit

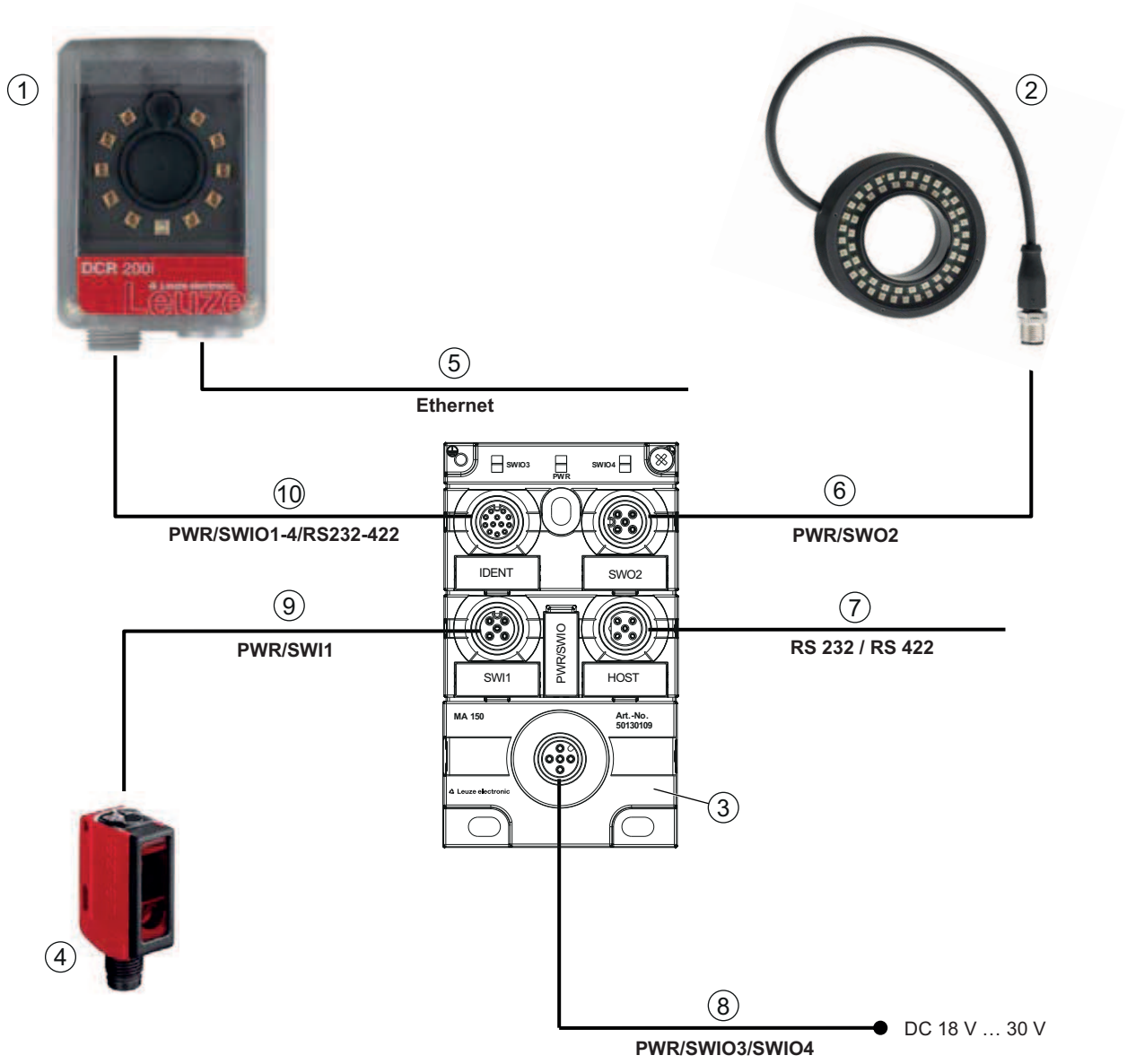

1	DCR 200i code reader
2	External illumination e.g., 50132511
3	MA 150 modular connection unit
4	Sensor (photoelectric sensor/diffuse sensor)
5	Cable, M12 connector/RJ45, 4-pin, 2 m e.g., 50109880
6	Cable, M12 connector/socket, 3-pin, 2 m e.g., 50130734
7	Cable, M12 connector/open cable end, 5-pin, 2 m e.g., 50108595
8	Cable, M12 socket/open cable end, 5-pin, 2 m e.g., 50104555
9	Cable, M12 socket/connector, 4-pin, 2 m e.g., 50110126
10	Cable, M12 socket/connector, 12-pin, 2 m e.g., 50130284

Fig. 7.11: Circuit diagram example with MA 150 connection unit

8 Starting up the device – Basic configuration

8.1 Measures to be performed prior to the initial commissioning

NOTICE

- Observe the notices for device arrangement (see chapter 6.1 "Determining the mounting position of the code reader").
- If possible, always trigger the code reader with the aid of commands or an external signal transmitter (e.g. photoelectric sensor/diffuse sensor).
  - ⇨ Only then can you be certain whether a code has been read (code contents are transmitted) or not (the "NO READ" character is transmitted at the end of the reading gate).
- Before commissioning, familiarize yourself with the operation and configuration of the device.
- Before connecting the operating voltage, recheck all connections and ensure that they have been properly made.

NOTICE

No additional configuration software is necessary for commissioning.

8.2 Starting the device

- Connect the 18 V … 30 V DC operating voltage.
- After applying the operating voltage, the device operates with the factory settings:
- Activation of the reading gate via SWI1. The integrated illumination becomes visible.
- If a code is detected, it is output via the interfaces.
  - Protocol of the RS 232 interface:

    <STX><Code data><CR><LF>

    (9600 baud, 8 data bits, no parity, 1 stop bit)
- With the factory settings, the device can decode the following code types:
  - 2/5 Interleaved; number of digits: 10
  - Code 128; number of digits: 4 … 63
  - Code 39; number of digits: 4 … 30
  - EAN 8/13; number of digits: 8 and 13
    Optional with 2/5 Addendum
  - UPC; number of digits: 8 … 12
    Optional with 2/5 Addendum
  - Codabar; number of digits: 4 … 63
  - Code 93; number of digits: 4 … 63
  - GS1 DataBar OMNIDIRECTIONAL; number of digits: 14
  - GS1 DataBar LIMITED; number of digits: 14
  - GS1 DataBar EXPANDED; number of digits: 14 … 21
  - GS1 DataBar TRUNCATED; number of digits: 14
  - DataMatrix code ECC200; number of digits: 10x10 … 144x144, or 8x18 … 16x48
  - QR code; number of digits: 11x11 … 161x161
  - Aztec code; number of digits: 11x11 … 151x151

	NOTICE
	Deviations from these settings must be set via the webConfig tool (see chapter 9 "Commissioning – Leuze electronic webConfig tool").

↳ Using the online commands, important device functions can be checked, e.g. reading activation (see chapter 10.1 "Online commands").

	NOTICE
	For information on how to proceed in the event of problems during commissioning of the devices see chapter 12 "Diagnostics and troubleshooting". If a problem occurs that cannot be rectified even after checking all electrical connections and settings on the devices and on the host, contact your responsible Leuze electronic subsidiary or Leuze electronic customer service (see chapter 13 "Service and support").

8.3 Setting the communication parameters

With the communication parameters, you determine how data is exchanged between device and host system, monitor PCs etc.

8.3.1 Manually setting the IP address

Set the IP manually if your system does not include a DHCP server or if the IP addresses of the devices are to be set permanently.

Factory settings for the network address of the code readers of the DCR 200i series:

- IP address: 192.168.060.101
- Subnet mask: 255.255.255.0

Setting the IP address via PC/laptop

Set the network address on the PC (example for Windows7).

↳ Log in as administrator.

↳ Select *Start* > *System control* > *Network and Internet* > *Network and Sharing Center*.

⇨ Select *LAN connection* and double-click to open the *Properties* dialog.

↳ Select *Internet Protocol Version 4 (TCP/IPv4)* and click on the [Properties] button.

↳ Set the *IP address* of the PC.

⇨ The IP address of the PC must not be identical to the IP address of the code reader.

⇨ Example: IP address of the code reader: 192.168.060.101
IP address of the PC: 192.168.060.110

↳ Set the subnet mask of the PC to the same value as on the code reader.

⇨ Example: 255.255.255.0

↳ Confirm all of the settings dialogs with [OK] or [Close].

↳ Connect the Ethernet interface of the device directly to the LAN port of the PC.

↳ Start the webConfig tool using your PC's Internet browser with IP address **192.168.060.101**.

↳ In the webConfig tool, change the IP address to the IP address of the system:
Configuration > Control > Ethernet DCR

	NOTICE
	The device cannot be accessed if the IP address is incorrect! ↳ Make certain that the correct IP address is entered. The device can otherwise no longer be accessed.

Setting the IP address with Device-Finder

- Download the program *Device-Finder* from the Internet to the PC.
  - ⇨ Call up the Leuze home page: **www.leuze.com**.
  - ⇨ Enter the type designation or part number of the device as the search term.
  - ⇨ The program *Device-Finder* can be found on the product page for the device under the *Downloads* tab.
- Connect the Ethernet interface of the device directly to the LAN port of the PC.
- Start the program *Device-Finder*.
  - ⇨ The program displays all code readers DCR 2xxi that are available in the network.
- Select the DCR 2xxi code reader from the list.
  - ⇨ The IP address of the code reader can now be changed to the desired IP address.

Setting the IP address with the DCR Configurator

With the "DCR Configurator" smartphone app, you can set the IP address of the code reader without a PC.

- Download the "DCR Configurator" smartphone app from the Internet.
  - ⇨ Call up the Leuze home page: **www.leuze.com**.
  - ⇨ Enter the type designation or part number of the device as the search term.
  - ⇨ The "DCR Configurator" smartphone app can be found on the product page for the device on the *Downloads* tab.
- Open the "DCR Configurator" smartphone app.
- Select the **Assign IP address configuration** menu item and enter the desired IP address.
  - ⇨ The "DCR Configurator" generates a configuration code for changing the IP address to the desired value. The configuration code is displayed on the smartphone.
- Connect the code reader to the voltage supply and select the *AUTO* function on the control panel.
- Hold the configuration code generated by the "DCR Configurator" at the correct distance in front of the optics of the code reader.
- ⇨ The code reader adjusts the illumination and reads the configuration code.
- ⇨ The code reader changes the device configuration and saves the new configuration.

8.3.2 Automatically setting the IP address

Set the IP address automatically if a DHCP server assigns the IP addresses in the system.

- Select the option to obtain the IP address automatically in the webConfig tool:
  Configuration > Control > Ethernet DCR > DHCP
- Use the configuration code to obtain the IP address automatically (see chapter 17.3 "Configuration via configuration codes").

8.3.3 Address Link Label

The "Address Link Label" is an additional stick-on label that is affixed to the device.

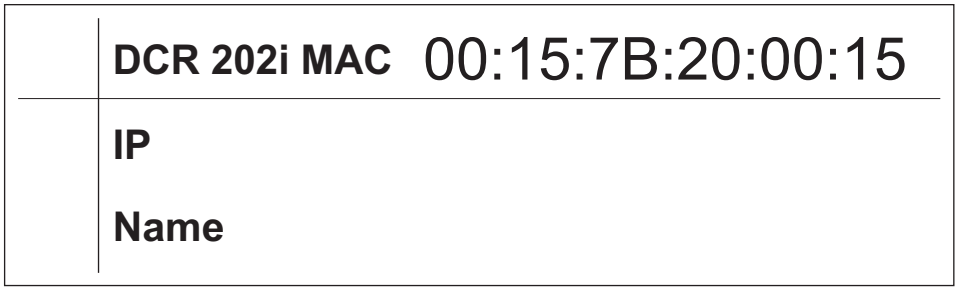

Fig. 8.1: Example of an "Address Link Label"; the device type varies depending on the series

- The "Address Link Label" contains the MAC address (Media Access Control address) of the device and makes it possible to enter the IP address and the device name manually.

  The area of the "Address Link Label" on which the MAC address is printed can be separated from the remainder of the stick-on label if necessary using the perforation.

- The "Address Link Label" can be removed from the device and affixed in the installation and layout diagrams to designate the device.
- Once it is affixed in the documents, the "Address Link Label" establishes a unique reference between the mounting location, the MAC address or the device, and the associated control program.

  There is no need for time-consuming searching, reading, and manually writing down of the MAC addresses of every device that is installed in the system.

	NOTICE
	Each device with Ethernet interface is uniquely identified via the MAC address assigned during production. The MAC address is also listed on the name plate of the device. If multiple devices are commissioned in a system, the MAC address of each installed device must be correctly assigned, e.g., during programming of the control.

8.3.4 Ethernet host communication

You can configure the connections to an external host system via the Ethernet host communication.

You can use both the UDP protocol as well as the TCP/IP protocol – in either client or in server mode. Both protocols can be activated simultaneously and used in parallel.

- The connection-free UDP protocol is used primarily to transfer process data to the host (monitor operation).
- The connection-oriented TCP/IP protocol can also be used to transfer commands from the host to the device. With this connection, the data is backed up by the TCP/IP protocol itself.
- If you would like to use the TCP/IP protocol, you must also define whether the device is to operate as a TCP client or as a TCP server.

UDP

The device requires from the user the IP address and the port number of the communication partner. In the same way, the host system (PC/control) also requires the set IP address of the device and the selected port number. By assigning these parameters, a socket is formed via which the data can be sent and received.

↳ Activate the UDP protocol.

↳ Set the following values:

  ⇨ IP address of the communication partner

  ⇨ Port number of the communication partner

The corresponding adjustment options can be found in the webConfig tool:
Configuration > Control > Host > Ethernet > UDP

TCP/IP

↳ Activate the TCP/IP protocol.

↳ Set the TCP/IP mode of the device.

  ⇨ In TCP client mode, the device actively establishes the connection to the superior host system, e.g., PC/control as server. The device requires from the user the IP address of the server (host system) and the port number on which the server (host system) accepts a connection. In this case, the device determines when and with whom a connection is established.

  ⇨ In TCP server mode, the superior host system (PC/control) actively establishes the connection and the connected device waits for the connection to be set up.
  The TCP/IP stack must be informed by the user as to the local port of the device (port number) on which connection requests from a client application (host system) are to be received.
  If there is a connection request and a connection is established by the superior host system (PC/control as client), the device – in server mode – accepts the connection. Data can then be sent and received.

- With a device as TCP client, set the following values:
  - IP address of the TCP server, normally the IP address of the control or the host computer
  - Port number of the TCP server
  - Timeout for the wait time for an answer from the server
  - Repetition time for renewed communication attempt following a timeout
- With a device as TCP server, set the following values:
  - Port number for the communication of the device with the TCP clients

The corresponding adjustment options can be found in the webConfig tool:
Configuration > Control > Host > Ethernet > TCP/IP

8.3.5 RS 232/RS 422 communication

The code reader sends an **S** to the interface as a start-up message and to announce that the device is ready.

The device operates as follows with the factory settings:

- Activation of the reading gate via SWI1. The integrated illumination becomes visible.
- If a code is detected, it is output via the RS 232 interface according to the following protocol.

  <STX><Code data><CR><LF>

  (9600 baud, 8 data bits, no parity, 1 stop bit)

8.3.6 FTP client

To transfer images and log files, you can configure process data output via an FTP server.

- You can set the IP address and the port number of the FTP server with which communication is to occur.
- Assign user names and password settings or define the direction of communication using the *Passive mode* option.
  - When the *Passive mode* option is activated, the FTP client sets up an outgoing connection to the server.
- Activate the FTP client.
- Select which images (OK/NOK) are transferred. You can assign each one a name.
- Use the *Target directory* function to specify a directory relative to the root directory in which the data is to be stored.

The corresponding adjustment options can be found in the webConfig tool:
Configuration > Control > Host > FTP client

	NOTICE
	You can set the time stamp via **Maintenance > System clock**. The system clock is reset if the operating voltage is interrupted.

8.4 Configuration via configuration codes

You can make configuration changes with the help of configuration codes (see chapter 17.3 "Configuration via configuration codes").

8.5 Activating device functions

You can activate the following device functions via the control buttons on the control panel:

- *TRIG*
- *AUTO*
- *ADJ*
- *TEACH*

↳ Connect the code reader to the voltage supply.

↳ Select the desired function via the control buttons on the control panel (see chapter 3.4.2 "Bar graph display").

	NOTICE
	On devices with stainless steel housing, it is not possible to select functions using the control buttons.

TRIG

Trigger function that activates a read process with the configuration stored in the device, e.g., reading gate control.

AUTO

By activating the *AUTO* function, the following sequence is started:

1. Optimum image setting: The device determines the optimum illumination setting for the given scenario.
2. Determine code types and number of digits: If codes are found, they are decoded.
3. Decoder table: The contents of the decoder table stored in the device are deleted. The new codes (code type and number of digits) are stored in the decoder table.

	NOTICE
	Only activate the *AUTO* function while at a standstill! ↳ Only activate the *AUTO* function if the code is not moving relative to the device.

	NOTICE
	***AUTO* function not for Pharmacode!** ↳ The *AUTO* function cannot be used for Pharmacode codes.

ADJ

Adjustment function for aligning the device.

The reading quality is visually displayed as a percentage in the bar graph display. The bar graph display depicts the average value over the last ten measurements.

	NOTICE
	Deactivate the *ADJ* function! ↳ You must deactivate the *ADJ* function with the enter button ↵.

TEACH

With activation of the teach function, a present code is taught-in as a reference code.

During the teach event, the reading gate is opened and a code located in the read field is decoded. The decoded code is stored as a new reference code in the device.

NOTICE

Only one code in the read field during the teach function!

↳ Upon activation of the teach function, only one code may be located in the read field of the device.

NOTICE

***TEACH* function for Pharmacode!**

Before teaching Pharmacode codes, the number of bars, the read direction and the region of interest (ROI) must be configured using the webConfig tool.

8.6 Performing further settings

8.6.1 Decoding and processing the read data

The device offers the following possibilities:

- Setting the number of code labels to be decoded for each reading gate (0 … 99). This is done via the *Max. no. of labels* parameter.
- Setting the *Search mode* in which the system is to search for the codes (see chapter 8.6.5 "Optimizing reading performance").
  - *Fast*
  - *Optimized*
  - *Robust*
- Further parameters can be set for many code types, e.g.
  - Code type (symbology)
  - Number of digits

    Either a number of digits, e.g., 10, 12, 24, or a number of digits range, e.g., 8 … 22
  - Check digit method used for decoding as well as the type of check digit transmission for the output of the read result.

    Standard: corresponds to the standard for the selected code type/symbology

    Not standard

↳ Define at least one code type with the desired settings.

⇨ webConfig tool: **Configuration > Decoder**

⇨ Control buttons (not on devices wit stainless steel housing): *AUTO* function

⇨ Control buttons: *AUTO* function

8.6.2 Control of the decoding

In general, decoding is controlled via the configurable switching inputs/outputs. The corresponding connection to the PWR / SWIO interface must be configured as a switching input for this purpose (see chapter 7.2 "PWR / SWIO").

Controlling decoding via a switching input:

- Start/stop decoding
- Start decoding and then stop decoding after a configurable time period
- Read in a reference code
- Start automatic code type configuration (*AUTO* function)
- Start alignment mode

↳ Connect the required control devices, e.g., photoelectric sensor, proximity switch, etc., to the device (see chapter 7 "Electrical connection").

↳ Configure the connected switching inputs according to your requirements.

⇨ First set the I/O mode to input.

⇨ Then configure the switching behavior.

⇨ webConfig tool: **Configuration > Control > Digital I/Os**

	NOTICE
	Alternatively, depending on the camera operating mode, you can activate decoding using the **+** online command and deactivate it using the **–** online command (see chapter 10.1 "Online commands").

8.6.3 Activating camera operating mode

The camera operating mode defines how the code reader starts a read process and decodes the codes if a code is located in the read field (see chapter 4.1 "Camera operating modes").

The following options are available for activating the camera operating mode:

- webConfig tool (see chapter 9 "Commissioning – Leuze electronic webConfig tool")

  CONFIGURATION > CONTROL > Camera operating mode
- Online command via the host interface (see chapter 10.1 "Online commands")
- Trigger signal via a digital trigger input

8.6.4 Control of the switching outputs

By using the switching inputs/outputs of the device, external event-controlled functions can be implemented without assistance from the superior process control. Switching inputs/outputs SWO2, SWIO3 and SWIO4 on the PWR / SWIO connection must be configured as switching output for this purpose (see chapter 7.2 "PWR / SWIO").

A switching output can, for example, be activated according to the following criteria:

- At the start/end of the reading gate
- Upon actuation by an external flash
- Depending on the read result:
  - Reference code comparison positive/negative
  - Read result valid/invalid
- Depending on the state of the device:
  - Device ready/not ready
  - Data transmission active/not active
  - Active/standby
  - Error/no error

↳ Connect the required switching outputs (see chapter 7 "Electrical connection").

↳ Configure the connected switching outputs according to your requirements.

⇨ First set the I/O mode to output

⇨ Then configure the switching behavior.

⇨ webConfig tool: **Configuration > Control > Digital I/Os**

8.6.5 Optimizing reading performance

Optimize the reading performance of the code reader using the following settings in the webConfig tool:

- *Decoding table*

  Limiting of the code types being searched for and the number of digits

  The adjustment options can be found in the webConfig tool: **Configuration > Decoder > Code types**
- *Exposure time*

  A short exposure time enables high object speeds. Because the image brightness is thereby reduced, it may be necessary to adjust the signal gain. Image noise increases as a result, however.

  The adjustment options can be found in the webConfig tool: **Configuration > Image acquisition**
- *Image resolution*

  A reduced image resolution enables fast decoding. If the image resolution is reduced, the modulus size of the code that is to be read must be taken into account.

  The adjustment options can be found in the webConfig tool: **Configuration > Image acquisition**
- *Working range*

  Define a region of interest (ROI) to restrict coding to a single part of the image. If no region of interest is defined, the complete image is defined as the region of interest.

  The adjustment options can be found in the webConfig tool: **Configuration > Decoder > Region of interest**
- *Max. decoding time*

  Define the maximum decoding time to limit the execution time of the code search algorithm.

  The adjustment options can be found in the webConfig tool: **Configuration > Decoder > Properties**
- *Camera operating mode*

  Select the *Single trigger mode* camera operating mode for fast complete decoding.

  The adjustment options can be found in the webConfig tool: **Configuration > Control > Camera operating mode**
- *Max. no. of codes*

  If the maximum number of codes to be expected in an image (ROI) is small and known, the code search is accelerated.

  Define the maximum number of codes that can be decoded in a test program. If the defined number of codes has been decoded, the code search algorithm is interrupted.

  The adjustment options can be found in the webConfig tool: **Configuration > Decoder > Extended**
- *Image transfer*

  Deactivation of image transfer in process mode increases the decoding rate.

  Adjustment options can be found in the webConfig tool: **Configuration > Device > Image transfer**
- *Search mode*

  Select the *Optimized* search mode for fast decoding. This search mode can only be used for 2D-codes.

  The adjustment options can be found in the webConfig tool: **Configuration > Decoder > Extended**

  You must then teach the found codes using the [Optimize code] button.
- *Color mode*

  If it is known beforehand whether the codes are printed black on a white background or white on a black background, you can select the color mode accordingly. Set the *Automatic* color mode if codes in both print variants are present.

  The adjustment options can be found in the webConfig tool: **Configuration > Decoder > Extended**

8.6.6 Transfer configuration data

Transferring configuration data with the webConfig tool

With the webConfig tool, you can store complete device configurations on data carriers and transfer them from these to the device: **Maintenance > Backup/Restore**

This storage of configuration data is especially useful if you want to store basic configurations which will require only minor changes.

9 Commissioning – Leuze electronic webConfig tool

The code readers of the DCR 200i series can be operated and configured via the Ethernet service interface with the integrated Leuze electronic webConfig tool.

With the webConfig tool, an operating-system independent, web-technology based, graphical user interface is available for configuring code readers.

Through the use of HTTP as communication protocol and the client-side restriction to standard technologies (HTML, JavaScript and AJAX), which are supported by all of today's popular, modern browsers, it is possible to operate the webConfig tool on any Internet-enabled PC.

NOTICE

The webConfig tool is offered in the following languages:
German, English, French, Italian, Spanish Chinese and Korean

9.1 System requirements

To use the webConfig tool, you need a PC or laptop with the following specifications:

Tab. 9.1: System requirements for the webConfig tool

Monitor	Min. resolution: 1280 x 800 pixels or higher
Internet browser	Internet Explorer version 9.0 or higher Firefox version 30 or higher Chrome version 40 or higher

NOTICE

- ↳ Regularly update the operating system and the Internet browser.
- ↳ Install the current Windows Service Packs.

9.2 Start webConfig tool

✓ Prerequisite: IP address and subnet mask for the LAN connection with the device are set correctly.

↳ Connect the operating voltage to the device.

↳ Connect the HOST interface of the device to the PC. The connection to the HOST interface of the device is made via the LAN port of the PC.

↳ Start the webConfig tool via your PC's Internet browser with IP address **192.168.60.101** or with the IP address set by you.

⇨ **192.168.60.101** is the standard Leuze electronic IP address for communication with code readers of the DCR 200i series.

The PC displays the webConfig start page with the current process information in the *Process* operating mode:

- Current image of the code reader
- Current decoding result
- Brief history of the last decoding operations
- States of the switching inputs/outputs
- Statistics counter

NOTICE

The process information may be displayed with a time delay depending on the current processing speed.

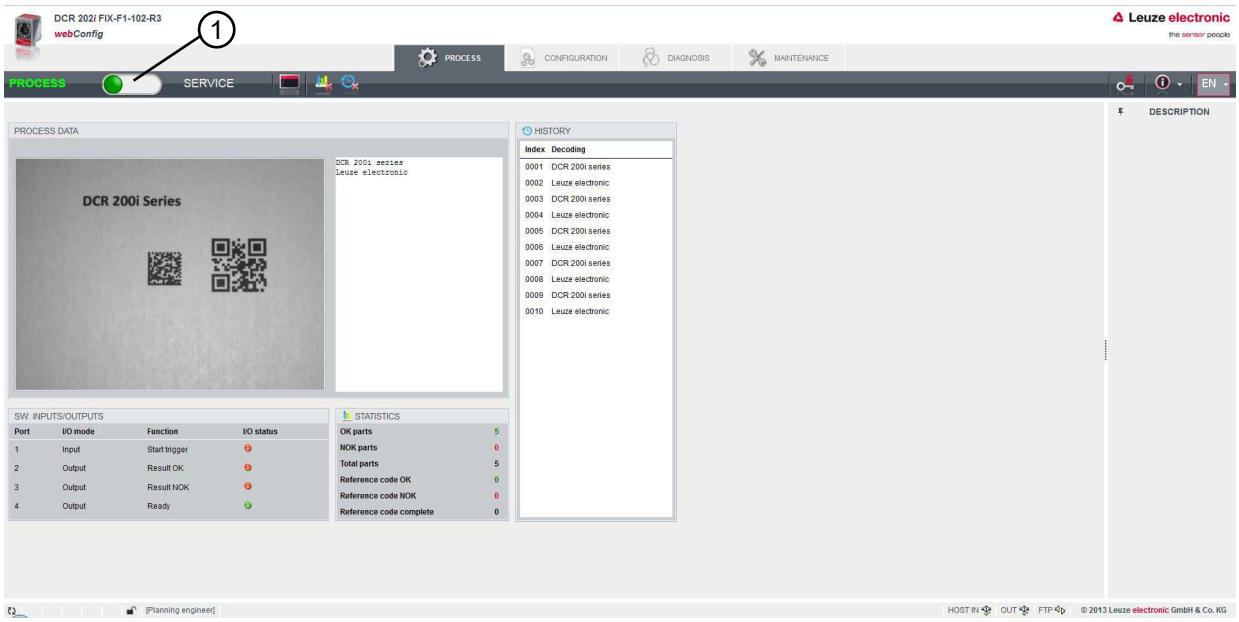

1 Changing the operating mode (*Process* - *Service*)

Fig. 9.1: The start page of the webConfig tool

The user interface of the webConfig tool is largely self-explanatory.

	NOTICE
	The webConfig tool is completely contained in the firmware of the device. The pages and functions of the webConfig tool may appear and be displayed differently depending on the firmware version.

Clear browser history

The cache of the Internet browser is to be cleared if different device types or devices with different firmware were connected to the webConfig tool.

↳ Delete cookies and temporary Internet and website data from browser history before starting the webConfig tool.

⇨ Example for Internet Explorer 10:
Settings > Security > Browser History > [Delete]

Note limit of Firefox sessions for version 17.0 and higher

If the limited number of Firefox sessions is exceeded, it may no longer be possible to address the device via the webConfig tool.

↳ Do **not** use the Internet browser's refresh function:
[Shift] [F5] or [Shift] + mouse click

9.3 Short description of the webConfig tool

The menus and dialog boxes of the webConfig tool are intuitive to operate and provide texts and tool tips.

The start page of the webConfig tool displays the current process information.

9.3.1 Change operating mode

For configurations with the webConfig tool, you can switch between the following operating modes:

- *Process*

  The device is connected to the control or to the PC.
  - The process communication to the control is activated.
  - The switching inputs/outputs are activated.
  - The image currently recorded by the code reader is displayed if the function was not deactivated in the webConfig tool.
  - The configuration cannot be changed.
- *Service*
  - Process communication to the control or to the PC has been interrupted.
  - The switching inputs/outputs are deactivated.
  - The configuration can be changed.

NOTICE	
	Configuration changes only in the *Service* operating mode! ↳ Changes made using the *CONFIGURATION* function can only be performed in the *Service* operating mode.

Located in the upper left of all pages of the webConfig tool is a software switch for changing the operating mode (*Process* - *Service*).

After changing to the *Service* operating mode, the **CONFIGURATION** menu is displayed.

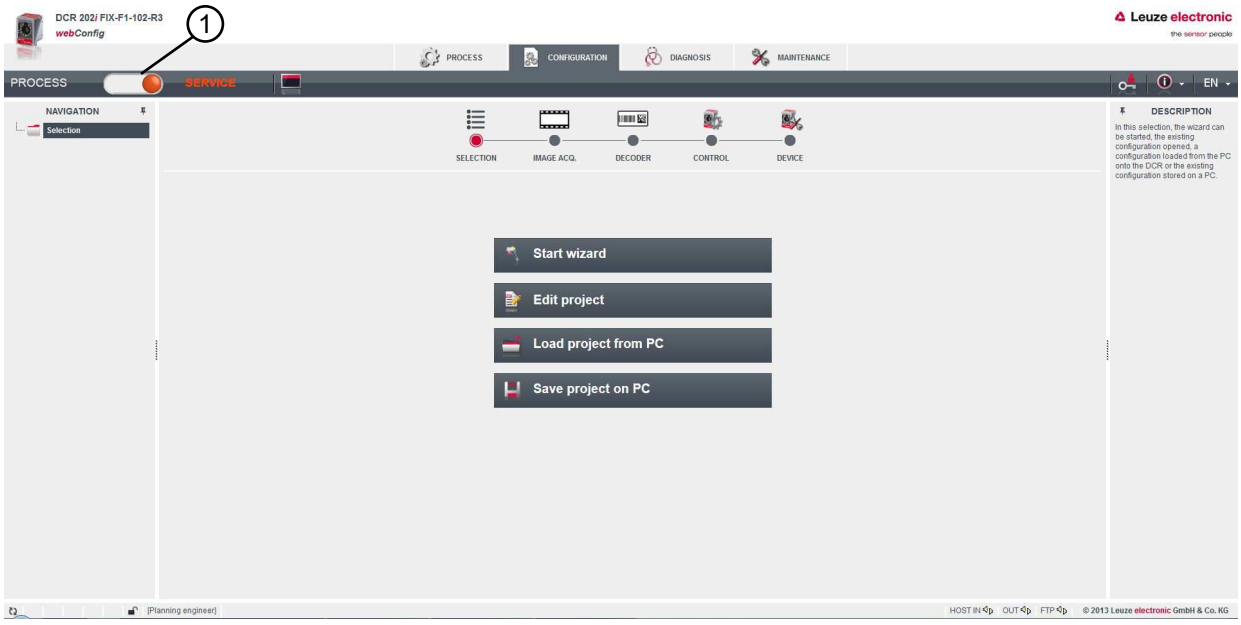

1 Changing the operating mode (*Process* - *Service*)

Fig. 9.2: **CONFIGURATION** menu of the webConfig tool

9.3.2 Menu options of the webConfig tool

The webConfig tool offers the following menu functions:

- **PROCESS**
  - Information on the current read result
  - Current camera image
  - Status of the switching inputs/outputs
  - Reading statistics

- **CONFIGURATION**
  - Configuring decoding
  - Configuring data formatting and data output
  - Configuring the switching inputs/outputs
  - Configuring communication parameters and interfaces
  - General device settings, e.g. device names
- **DIAGNOSIS**
  - Event logging of warnings and errors
- **MAINTENANCE**
  - Assigning user roles (user management)
  - Backup/restore the configuration file
  - Update firmware
  - Setting system time (system clock)
  - Managing user guidance

9.3.3 CONFIGURATION menu

NOTICE

Configuration changes only in the *Service* operating mode!

↳ Changes made using the **CONFIGURATION** menu can only be performed in the *Service* operating mode.

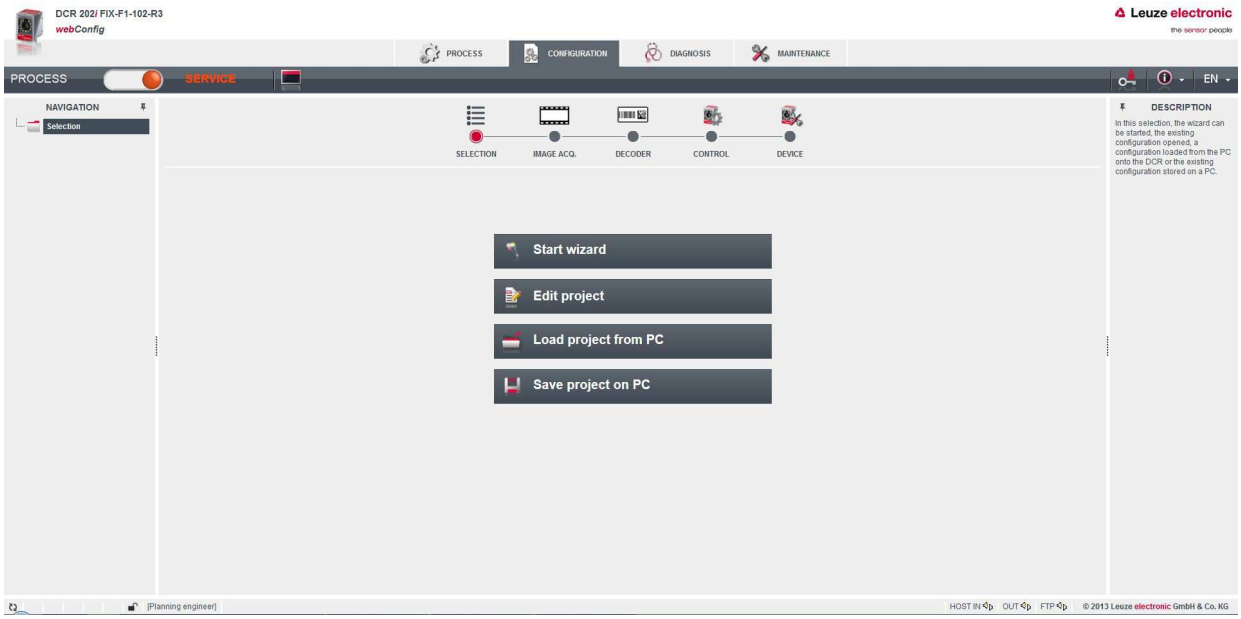

Fig. 9.3: **CONFIGURATION** menu

↳ Select the application that you would like to configure.

- [Start wizard]: Quick configuration in just a few steps
- [Edit project]: Configuration via the full view of the webConfig tool
- [Load project from PC]: Configuration via an existing configuration project
- [Save project on PC]: Save configuration project

9.3.4 Configuring applications with the wizard

With the configuration wizard, you can set up your application in just a few steps.

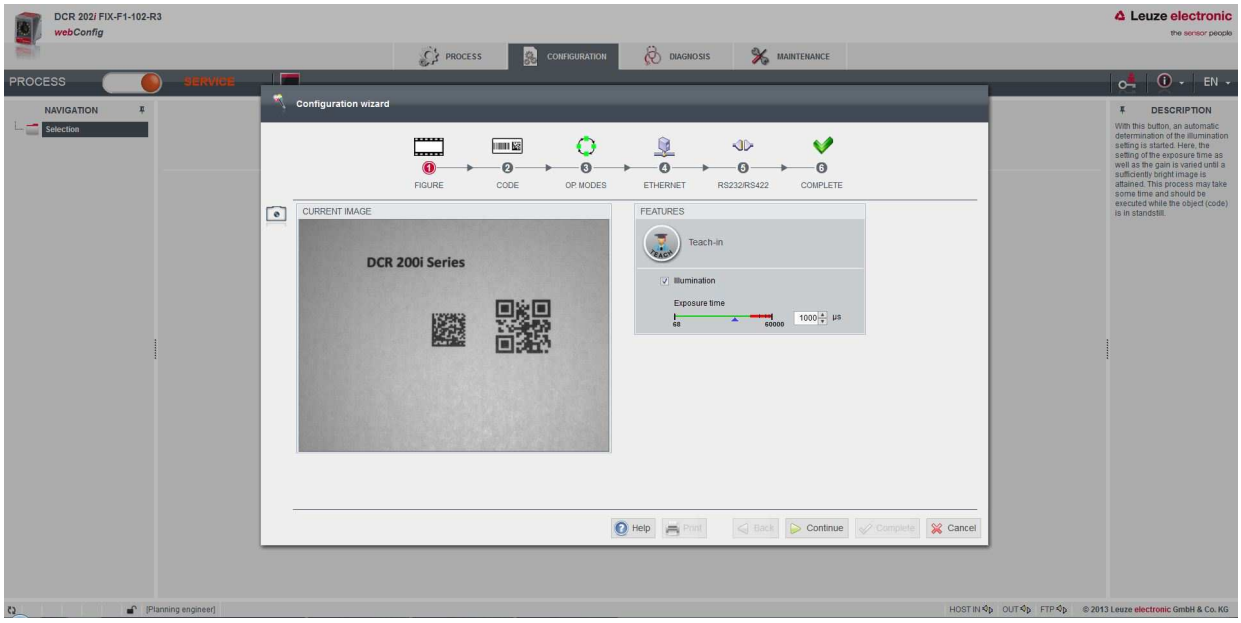

Fig. 9.4: Configuration wizard

- Select **CONFIGURATION >** [Start Wizard].
- Make the settings using the configuration steps presented by the wizard.

	NOTICE
	The settings are not saved until the final configuration step (FINISH) is performed.

10 Interfaces – Communication

Commands can be used to send commands directly to the code reader for control and configuration. The following transmission options are available for the commands:

- Online commands via the Ethernet or RS 232/RS 422 interface (see chapter 10.1 "Online commands")
- XML-based communication via the Ethernet interface (see chapter 10.2 "XML-based communication")

10.1 Online commands

10.1.1 Overview of commands and parameters

Online commands can be used to send commands directly to the code reader for control and configuration. For this, the code reader has to be connected to a computer (host) via the serial interface or the Ethernet interface (see chapter 8.3.4 "Ethernet host communication").

Online commands offer the following options for controlling and configuring the code reader:

- Control/decode the reading gate
- Read/write/copy parameters
- Carry out an automatic configuration
- Teach-in/set reference codes
- Call up error messages
- Query statistical device information
- Perform a software RESET and re-initialize the code reader

Syntax

Online commands consist of one or two ASCII characters followed by command parameters.

No separation characters may be entered between the command and the command parameter(s). Both small and capitalized letters can be used.

Example:

Command ’**CA**’:	Auto setup function
Parameter ’**+**’:	Activation
Transmitted is:	’**CA+**’

Notation

Commands, parameters and returned data are enclosed between single quotation marks ’ ’ in the text of this manual.

Most online commands are acknowledged by the device and any requested data returned. For commands that are not acknowledged, command execution can be observed or monitored directly on the device.

10.1.2 General online commands

Software version number

Command	**’V’**
Description	Requests device version information
Parameter	None
Acknowledgment	Example: **’DCR 202i FIX-F1-102-R2 V1.0.0 2016-01-01’** The first line contains the device type of the code reader, followed by the device version number and version date. The data which is actually displayed may vary from the values given here.

	NOTICE
	You can use this command to check whether the communication between PC and code reader is functional. ↳ If you do not receive an acknowledgment, please check the interface connections or the protocol.

Software reset

Command	'H'
Description	Carries out a software reset. The device is restarted and reinitialized, leaving it in the same state as when the operating voltage is switched on.
Parameter	None
Acknowledgment	'S' (start signal)

Auto setup

Command	'CA'		
Description	Activates the *Auto setup* function: • Determine optimum illumination settings. • Decode present code. • Permanently store found code types and number of digits in the decoder table. This is performed if a configuration code is present!		
Parameter	'+'	Activates *Auto setup*	
Acknowledgment	'CS=x'		
	x	Status	
		'00'	Valid **'CA'** command
		'01'	Invalid command
		'02'	'Auto setup' could not be activated

Command	’CA’		
Response	’xx yyyy zzzzzz’		
	xx	Code type of the read code	
		’01’	2/5 Interleaved
		’02’	Code 39
		’06’	UPC (A, E)
		’07’	EAN
		’08’	Code 128, EAN 128
		’09’	Pharmacode
		’10’	EAN Addendum
		’11’	Codabar
		’12’	Code 93
		’13’	GS1 DataBar Omni
		’14’	GS1 DataBar Limited
		’15’	GS1 DataBar Expanded
		’20’	GS1 DataBar Truncated
		’32’	DataMatrix ECC200
		’33’	QR code
		’34’	Aztec
		’48’	PDF417
		’52’	GS1 DataBar Stacked
		’53’	GS1 DataBar Stacked Omni
		’54’	GS1 DataBar Stacked Expanded
	yyyy		Number of digits of the read code
	zzzzzz		Contents of the decoded label.

Alignment mode

Command	’JP’	
Description	Activates or deactivates the alignment mode for simple mounting alignment of the device. After activating the function with **JP+**, the code reader constantly outputs status information on the serial and Ethernet interface. With the online command, the code reader is set so that it constantly outputs the floating average value of the last 10 image acquisitions in [%] and the decoding result. These values can be used to determine the reading quality or decoding quality. The values are also output on the bar graph display of the device (SIGNAL QUALITY).	
Parameter	’+’	activates the alignment mode
	’-’	deactivates the alignment mode
Acknowledgment	’yyy zzzzzz’	
	yyy	Reading quality in [%].
	zzzzzz	Code information

Manual definition of the reference code

Command	’RS’		
Description	This command can be used to define a new reference code in the code reader by means of direct input via the serial interface or the Ethernet interface.		
Parameter	’RSyvxxzzzzzzzz’ **y**, **v**, **x** and **z** are placeholders (variables) for the actual input.		
	y	Def. reference code no.	
		’1’	(Code 1)
	v	Storage location for reference code:	
		’3’	RAM only
	xx	Defined code type (see command 'CA')	
	z	Defined code information (1 … 244 characters)	
Acknowledgment	’RS=x’		
	x	Status	
		’00’	Valid **'Rx'** command
		’01’	Invalid command
		’02’	Insufficient memory for reference code
		’03’	Reference code has not been saved
		’04’	Reference code invalid
Example	Entry = ’RS133211032010’ Code 1 (1), RAM (03)+EEPROM (0), DataMatrix ECC 200 (32), code information		

Teach-in

Command	’RT’		
Description	This command enables a reference code to be defined quickly by reading an example label.		
Parameter	’RTy’		
	y	Function	
		’1’	Defines reference code 1
Acknowledgment	The code reader responds with command **’RS’** and corresponding status (see command ’RS’). After a code has been read, it sends the result in the following format: ’**RCyvxxzzzzz**’ **y**, **v**, **x** and **z** are placeholders (variables) for the actual input.		
	y	Def. reference code no.	
		’1’	(Code 1)
	v	Storage location for reference code:	
		’3’	RAM only
	xx	Defined code type (see command 'CA')	
	z	Defined code information (1 … 244 characters)	

NOTICE

With this function, only code types are recognized that are identified using the *Auto setup* function or which were set in the setup.

Reading a reference code

Command	’RR’		
Description	The command reads out the reference code defined in the code reader. If no parameters are specified, all defined codes are output.		
Parameter	<reference code number>		
	’1’	Reference code 1	
Acknowledgment	Output in the following format: ’**RCyvxxzzzz**’ If no reference codes are defined, nothing is entered for **zzzz**. **y**, **v**, **x** and **z** are placeholders (variables) for the actual input.		
	y	Def. reference code no.	
		’1’	(Code 1)
	v	Storage location for reference code:	
		’3’	RAM only
	xx	’00’ is always output	
	z	Defined code information (1 … 244 characters)	

Device status

Command	’SST?’		
Description	The command queries the device status. If the command is sent via the host interface (Ethernet, RS 232/RS 422), acknowledgment is only given in the *Process* operating mode. The host interface is blocked in the *Service* operating mode.		
Parameter	None		
Acknowledgment	’SST=xxxxxxxx’ **x** stands for a single bit (value ’1’ or ’0’) Bit 7 is at the far left, bit 0 is at the far right		
	0	Ready for testing	
		’1’	The code reader is ready to receive a trigger and start a check program.
		’0’	The code reader does not respond to an incoming trigger signal.
	1	Operating mode	
		’1’	*Process* operating mode
		’0’	*Service* operating mode
	2	Device error	
		’1’	Device error, no inspection possible
		’0’	No device error, ready
	3 … 7	No function, value is always ’0’	
	Alternatively, the following acknowledgment is output: ’DS=xx’		
	x	Error acknowledgment	
		’00’	Syntax error
		’01’	Other error

10.1.3 Online commands for system control

Activate decoding

Command	'+'
Description	The command activates configured decoding.
Parameter	None
Acknowledgment	None

Deactivate decoding

Command	'-'
Description	The command deactivates configured decoding.
Parameter	None
Acknowledgment	None

10.2 XML-based communication

You can send commands for control and configuration directly to the code reader via XML-based communication.

- The code reader must be connected to a computer (host) via the Ethernet interface (see chapter 8.3.4 "Ethernet host communication").
- The code reader is designed as an XML server and communicates on port 10004.

You can find detailed information on XML-based communication on the Leuze home page:
www.leuze.com

- Enter the type designation or part number of the device as the search term.
- You can find the information on the *Downloads* tab.

11 Care, maintenance and disposal

Usually, the code reader does not require any maintenance by the operator.

Cleaning

Clean the protective screen of the code reader with a soft cloth before mounting.

	NOTICE
!	**Do not use aggressive cleaning agents!** ↳ Do not use aggressive cleaning agents such as thinner or acetone for cleaning the device.

Maintenance

Repairs to the device must only be carried out by the manufacturer.

↳ For repairs, contact your responsible Leuze electronic subsidiary or Leuze electronic customer service (see chapter 13 "Service and support").

Disposing

↳ For disposal observe the applicable national regulations regarding electronic components.

12 Diagnostics and troubleshooting

Error signaling via LED

Tab. 12.1: Meaning of the LED indicators

Error	Possible error cause	Measures
PWR LED		
Off	• No operating voltage connected to the device • Hardware error	• Check operating voltage • Contact Leuze electronic customer service (see chapter 13 "Service and support")
Red, continuous light	Device error/parameter enable	Contact Leuze electronic customer service (see chapter 13 "Service and support")
Red, flashing	Warning set Temporary operating fault	Query diagnostic data and carry out the resulting measures
NET LED		
Off	• No operating voltage connected to the device • Hardware error	• Check operating voltage • Contact Leuze electronic customer service (see chapter 13 "Service and support")
Red, continuous light	Network error No communication established to the IO controller	Check interface
Red, flashing	No communication Parameterization or configuration failed	Check interface

13 Service and support

24-hour on-call service at:

+49 7021 573-0

Service hotline:

+49 7021 573-123

Monday to Friday 8.00 a.m. to 5.00 p.m. (UTC+1)

E-mail:

service.identify@leuze.de

Repair service and returns:

Procedure and Internet form can be found at

www.leuze.com/repair

Return address for repairs:

Service center

Leuze electronic GmbH + Co. KG

In der Braike 1

D-73277 Owen / Germany

13.1 What to do should servicing be required?

What to do should servicing be required?

NOTICE

Please use this chapter as a master copy should servicing be required!

↳ Enter the contact information and fax this form together with your service order to the fax number given below.

Customer data (please complete)

Device type:	
Serial number:	
Firmware:	
Status of LEDs:	
Error description:	
Company:	
Contact person/department:	
Phone (direct dial):	
Fax:	
Street/No:	
ZIP code/City:	
Country:	

Leuze Service fax number:

+49 7021 573 - 199

14 Technical data

14.1 General specifications

Tab. 14.1: Electrical equipment

Operating voltage U_B	18 V … 30 V DC PELV, Class 2 / SELV
Average power consumption	8 W without load on the switching output During strobed operation, a higher power can briefly be consumed.
Switching input Switching output	18 V … 30 V DC, depending on operating voltage I_{max}: 60 mA per switching output; 100 mA total current Short-circuit proof, protected against polarity reversal
Process interface	RS 232/RS 422, Ethernet 10/100 Mbit/s RS 232 with adjustable data format. Default: • 9600 Bd, 8 data bits, no parity, 1 stop bit • <STX> <data> <CR><LF>

Tab. 14.2: Operating and display elements

Keyboard	2 control buttons (not on devices with stainless steel housing)
LEDs	1 dual LED (green/red) for power (PWR) 1 dual LED (green/red) for bus state (NET) 1 dual LED (green/yellow) for link state (LINK) Bar graph display with 6 LEDs (green) for function selection and displaying the reading quality (not with devices with stainless steel housing)

Tab. 14.3: Mechanical data

Degree of protection	IP65 acc. to EN 60529 With screwed-on M 12 connectors or mounted caps
VDE protection class	III (EN 61140)
Connection technology	M12 connectors
Weight	120 g (housing hood with plastic screen)
Dimensions (H x W x D)	65.6 x 43 x 44 mm
Fastening	2 M4 threaded inserts on each of the side walls, 5 mm deep 4 M4 threaded inserts on the rear, 3.5 mm / 5 mm deep
Housing	Housing: polycarbonate Housing base: diecast aluminum
Optics cover	Polycarbonate Optional: glass

Devices with stainless steel housing	
Degree of protection	IP67/69K acc. to EN 60529 With screwed-on M 12 connectors or mounted caps
Weight	392 g (stainless steel housing with glass pane)
Dimensions (H x W x D)	66 x 46 x 45.5 mm
Fastening	2 M4 threaded inserts on the rear, 3.5 mm deep
Housing	Upper part of housing/housing base: stainless steel AISI 316L W.no: 1.4404 Housing seal: EPDM Housing screws: A4 stainless steel
Optics cover	Coated plastic (PMMA) or glass

Tab. 14.4: Environmental data

Ambient temp. (operation/storage)	0 °C … +50 °C/-20 °C … +70 °C
Air humidity	max. 90% rel. humidity, non-condensing
Ambient light	Max. 2000 Lux
Electromagnetic compatibility	EN 61000-6-2, EN 61000-6-4
Vibration	IEC 60068-2-6, test Fc
Continuous shock	IEC 60068-2-29, test Eb
Certifications	UL 60950-1 CAN/CSA C22.2 No. 60950-1-07 CSA C22.2 No. 60950-1-07
Conformity	CE, FCC, UL
Chemical resistance	Stainless steel housing tested in accordance with ECOLAB and Clean-Proof+ (see Leuze electronic website at **www.leuze.com**)

14.2 Optical data

Integrated LED illumination	Red light (visible, 616 nm) Risk group 0 (exempt group) Acc. to IEC 60825-1, EN 62471:2008
Integrated feedback LED	Green (528 nm)
Beam exit	Front
Image sensor	Global shutter CMOS Imager
Number of pixels	1280 x 960 pixels

Optics models	Resolution • Ultra High Density (U) 0.1 mm (4 mil) … 0.25 mm (10 mil) • High Density (N) 0.127 mm (5 mil) … 0.25 mm (10 mil) • Medium Density (M) 0.19 mm (7.5 mil) … 0.33 mm (13 mil) • Low Density (F) 0.25 mm (10 mil) … 0.5 mm (20 mil) • Ultra Low Density (L) 0.35 mm (14 mil) … 1.0 mm (40 mil)
Reading performance	Reading distance see chapter 6.1.3 "Determining the reading distance"
Electronic shutter speeds	68 µs … 5 ms (flash)

14.3 Code specifications

Code type: 1D	Code 128 EAN 128 (GS1-128), Code 39, Code 2/5 Interleaved, EAN 8/ EAN 13, UPC A/E, Pharmacode, Codabar (Monarch), Code 93
Code type: stacked codes	GS1 DataBar (Omnidirectional, Expanded, Limted, Truncated) GS1 DataBar (Stacked Omnidirectional, StackedExpanded) PDF417
Code type: 2D	DataMatrix (ECC200), Aztec Code, GS1 Aztec Code, GS1 DataBar (ECC200) QR-Code, GS1 QR-Code

14.4 Device with heating

Tab. 14.5: Electrical equipment

Operating voltage U_B	18 V … 30 V DC PELV, Class 2 / SELV
Average power consumption	12 W without load on the switching output During strobed operation, a higher power can briefly be consumed.
Warmup time	Minimum 30 minutes at +24 V DC and an ambient temperature of -30 °C

Tab. 14.6: Environmental data

Ambient temperature (operation)	-30 °C … +50 °C
Ambient temperature (storage)	-20 °C … +70 °C

14.5 Dimensioned drawings

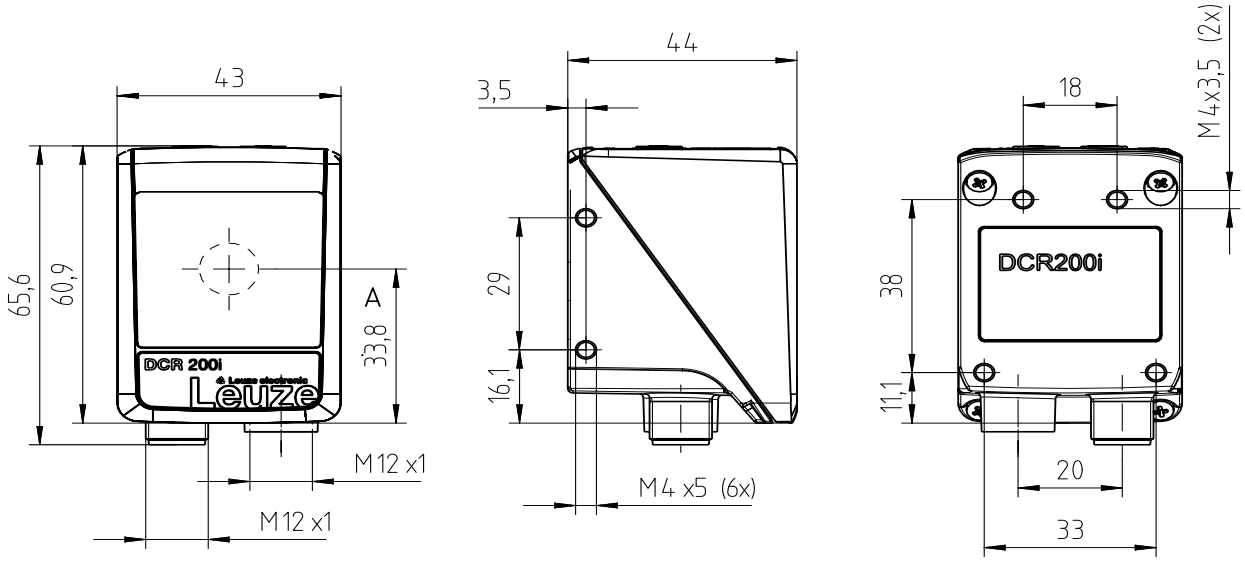

all dimensions in mm

A Optical axis

Fig. 14.1: DCR 200i dimensioned drawing

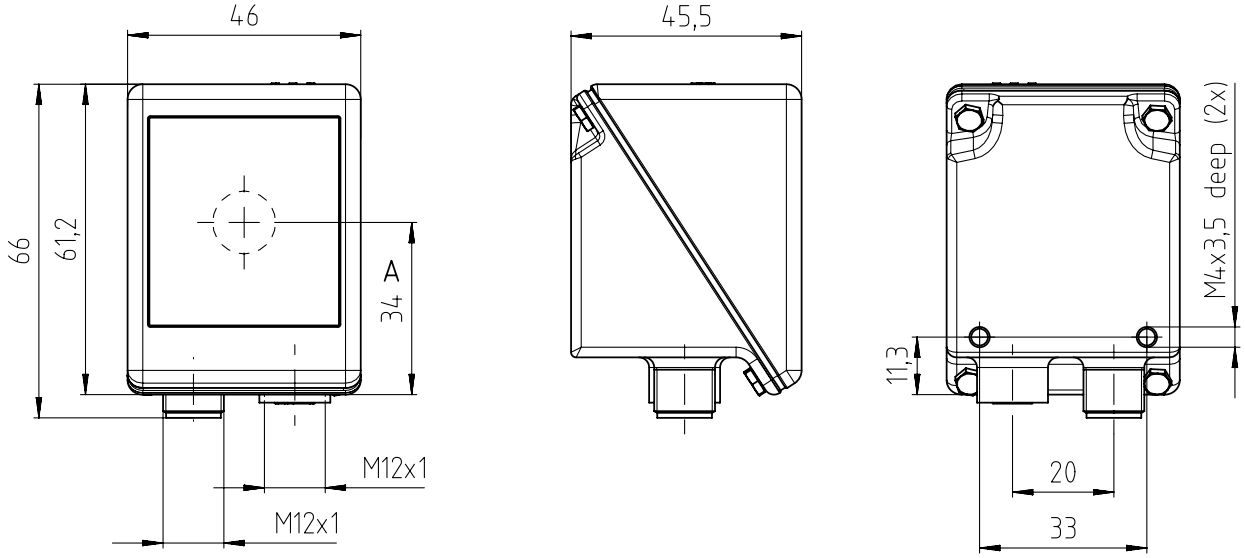

all dimensions in mm

A Optical axis

Fig. 14.2: Dimensioned drawing of DCR 200i with stainless steel housing

14.6 Dimensioned drawings - Accessories

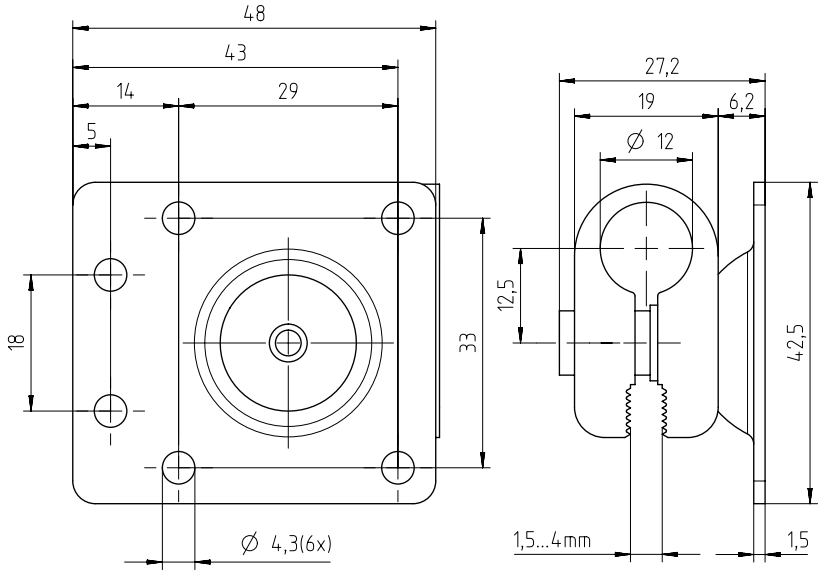

all dimensions in mm

Fig. 14.3: Dimensioned drawing of the BTU 320M-D12 mounting system

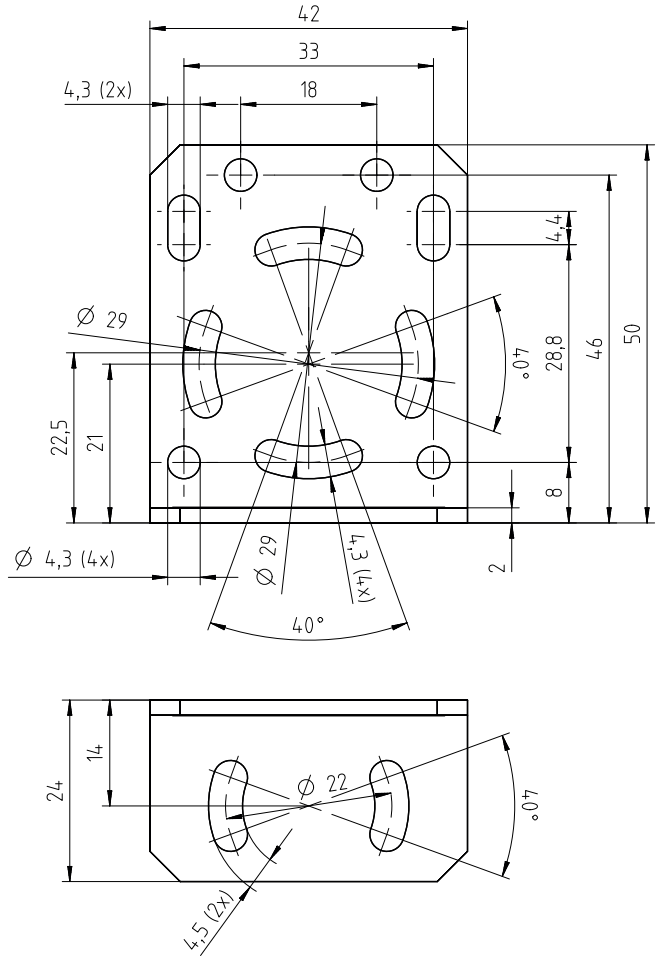

all dimensions in mm

Fig. 14.4: Dimensioned drawing of the BT 320M mounting bracket

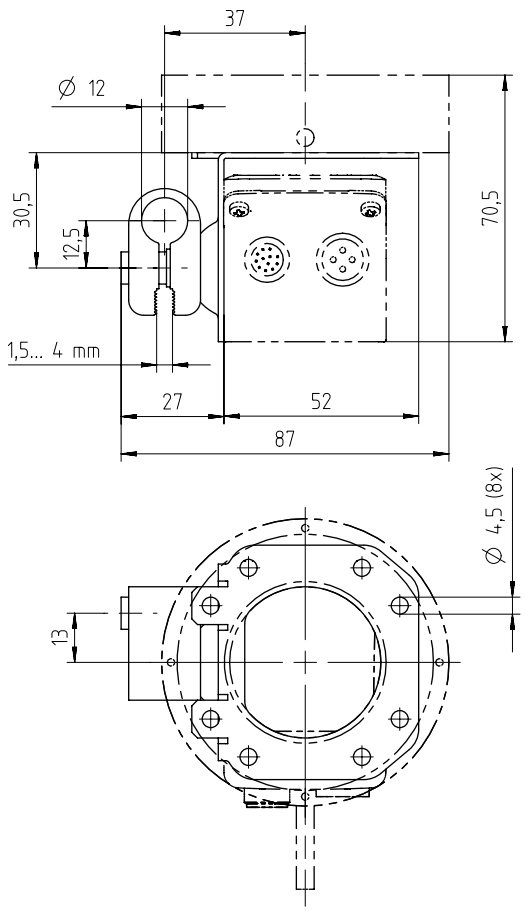

all dimensions in mm

Fig. 14.5: Dimensioned drawing of the BTU 320M-D12-RL70 mounting bracket for ring light

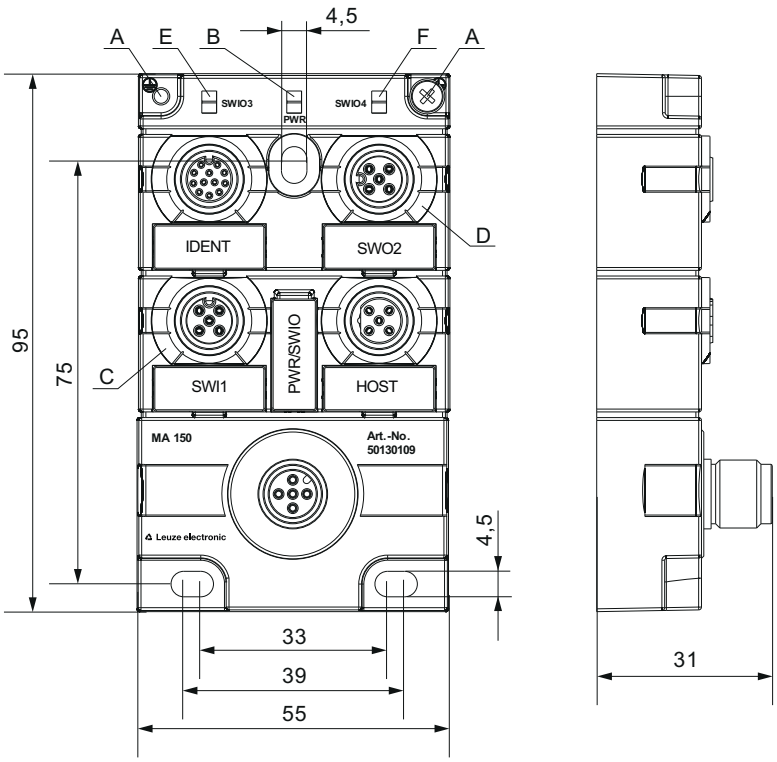

all dimensions in mm

A Earthing strap

B Green LED: PWR

C White LED: SWI1

D White LED: SWO2

E White LED: SWIO3

F White LED: SWIO4

Fig. 14.6: Dimensioned drawing of MA 150 connection unit

15 Order guide and accessories

15.1 Nomenclature

Part designation:

DCR 2xxi FIX-f -102-Rr-Z-X

Tab. 15.1: Part number code

DCR	Operating principle: Dual Code Reader
2	Series: DCR 200
xx	Host interface 02: Ethernet TCP/IP, UDP, RS 232/RS 422 48: PROFINET-IO, Ethernet TCP/IP, UDP, RS 232/RS 422
i	Integrated fieldbus technology
FIXED	Fixed focal length
f	Optics model: U: Ultra High Density N: High Density M: Medium Density F: Low Density L: Ultra Low Density
102	Device with connector/socket Beam exit at front
R	Illumination: red light
r	Resolution range: 3: 1280 x 960 pixels
Z	Type of protective screen: -: Plastic G: Glass P: Polarization filter
X	V: Stainless steel housing F001: NPN inputs/outputs H: Heating

NOTICE

A list with all available device types can be found on the Leuze electronic website at **www.leuze.com**.

15.2 Type overview

Tab. 15.2: Type overview

Type designation	Description	Part no.
DCR 202i FIX-U2-102-R3	Stationary 2D-code reader, U-optics	50137574
DCR 202i FIX-U2-102-R3-F001	Stationary 2D-code reader, U-optics, NPN	50141233
DCR 202i FIX-N1-102-R3	Stationary 2D-code reader, N-optics	50128782
DCR 202i FIX-N1-102-R3-F001	Stationary 2D-code reader, N-optics, NPN	50141234
DCR 202i FIX-M1-102-R3	Stationary 2D-code reader, M-optics	50128783
DCR 202i FIX-M1-102-R3-H	Stationary 2D-code reader, M-optics, heating	50137331
DCR 202i FIX-M1-102-R3-F001	Stationary 2D-code reader, M-optics, NPN	50141235
DCR 202i FIX-F1-102-R3	Stationary 2D-code reader, F-optics	50128784
DCR 202i FIX-F2-102-R3-F001	Stationary 2D-code reader, F-optics, NPN	50141236
DCR 202i FIX-L1-102-R3	Stationary 2D-code reader, L-optics	50137570
DCR 202i FIX-L1-102-R3-F001	Stationary 2D-code reader, L-optics, NPN	50141237
DCR 202i FIX-N1-102-R3-G	Stationary 2D-code reader, N-optics, glass pane	50128785
DCR 202i FIX-M1-102-R3-G	Stationary 2D-code reader, M-optics, glass pane	50128786
DCR 202i FIX-F1-102-R3-G	Stationary 2D-code reader, F-optics, glass pane	50128787
DCR 202i FIX-L1-102-R3-G	Stationary 2D-code reader, L-optics, glass pane	50137570
DCR 202i FIX-N1-102-R3-P	Stationary 2D-code reader, N-optics, polarization filter	50128788
DCR 202i FIX-M1-102-R3-P	Stationary 2D-code reader, M-optics, polarization filter	50128789
DCR 202i FIX-F1-102-R3-P	Stationary 2D-code reader, F-optics, polarization filter	50128790
DCR 202i FIX-L1-102-R3-P-F001	Stationary 2D-code reader, L-optics, polarization filter, NPN	50141238
DCR 202i FIX-N1-102-R3-V	Stationary 2D-code reader, stainless steel housing, N-optics	50134096
DCR 202i FIX-M1-102-R3-V	Stationary 2D-code reader, stainless steel housing, M-optics	50134097
DCR 202i FIX-F1-102-R3-V	Stationary 2D-code reader, stainless steel housing, F-optics	50134098
DCR 202i FIX-N1-102-R3-G-V	Stationary 2D-code reader, stainless steel housing, N-optics, glass pane	50134099
DCR 202i FIX-M1-102-R3-G-V	Stationary 2D-code reader, stainless steel housing, M-optics, glass pane	50134100
DCR 202i FIX-F1-102-R3-G-V	Stationary 2D-code reader, stainless steel housing, F-optics, glass pane	50134101

15.3 Optical accessories

Tab. 15.3: Accessories – housing hoods

Part no.	Part designation	Description
50131462	Cover DCR 200i	Housing hood with plastic pane
50131461	Cover DCR 200i-G	Housing hood with glass pane
50131460	Cover DCR 200i-P	Housing hood with polarization filter
50131459	Diffusor DCR 200i	Diffusor foil

15.4 Cables accessories

Tab. 15.4: Accessories – PWR connection cable (open cable end)

Part no.	Part designation	Description
M12 socket (12-pin, A-coded), axial connector, open cable end, shielded, UL		
50130281	KD S-M12-CA-P1-020	PWR connection cable, length 2 m
50130282	KD S-M12-CA-P1-050	PWR connection cable, length 5 m
50130283	KD S-M12-CA-P1-100	PWR connection cable, length 10 m
M12 socket (12-pin, A-coded), angled connector, open cable end, shielded, UL		
50134943	KD S-M12-CW-P1-050	PWR connection cable, length 5 m

Tab. 15.5: Accessories – PWR interconnection cable (reduction to M12, 5-pin)

Part no.	Part designation	Description
M12 socket (12-pin, A-coded), axial connector **M12 connector (5-pin, A-coded), shielded**		
50137694	KDS S-M12-CA-M12-5A-P1-004-23X	Interconnection cable, length 0.4 m

Tab. 15.6: Accessories – PWR connection cable (extension, to M12 plug)

Part no.	Part designation	Description
M12 socket (12-pin, A-coded), axial connector **M12 plug (12-pin, A-coded), shielded, UL**		
50130284	KDS S-M12-CA-M12-CA-P1-020	Connection cable, length 2 m
50130285	KDS S-M12-CA-M12-CA-P1-050	Connection cable, length 5 m
50130286	KDS S-M12-CA-M12-CA-P1-100	Connection cable, length 10 m

Tab. 15.7: Accessories – Ethernet connection cable (to RJ-45)

Part no.	Part designation	Description
M12 plug (4-pin, D-coded), axial connector to RJ-45 connector, shielded, UL		
50135080	KSS ET-M12-4A-RJ45-A-P7-020	Ethernet connection cable (on RJ-45), length 2 m
50135081	KSS ET-M12-4A-RJ45-A-P7-050	Ethernet connection cable (on RJ-45), length 5 m
50135082	KSS ET-M12-4A-RJ45-A-P7-100	Ethernet connection cable (on RJ-45), length 10 m
50135083	KSS ET-M12-4A-RJ45-A-P7-150	Ethernet connection cable (on RJ-45), length 15 m
50135084	KSS ET-M12-4A-RJ45-A-P7-300	Ethernet connection cable (on RJ-45), length 30 m

Tab. 15.8: Accessories – Ethernet connection cable (open cable end)

Part no.	Part designation	Description
M12 plug (4-pin, D-coded), axial connector, open cable end, shielded, UL		
50135073	KS ET-M12-4A-P7-020	Ethernet connection cable, length 2 m
50135074	KS ET-M12-4A-P7-050	Ethernet connection cable, length 5 m
50135075	KS ET-M12-4A-P7-100	Ethernet connection cable, length 10 m
50135076	KS ET-M12-4A-P7-150	Ethernet connection cable, length 15 m
50135077	KS ET-M12-4A-P7-300	Ethernet connection cable, length 30 m
M12 plug (4-pin, D-coded), angled connector, open cable end, shielded, UL		
50134942	KS ET-M12-4W-P7-050	Ethernet connection cable, length 5 m

Tab. 15.9: Accessories – BUS IN/BUS OUT connection cable (to M12)

Part no.	Part designation	Description
M12 plug (4-pin, D-coded), BUS IN/BUS OUT to M12 socket, shielded, UL		
50106899	KB ET-2000-SSA	BUS OUT connection cable, length 2 m
50106900	KB ET-5000-SSA	BUS OUT connection cable, length 5 m
50106901	KB ET-10000-SSA	BUS OUT connection cable, length 10 m
50106902	KB ET-15000-SSA	BUS OUT connection cable, length 15 m
50106905	KB ET-30000-SSA	BUS OUT connection cable, length 30 m

15.5 Other accessories

Tab. 15.10: Accessories – External illumination

Part no.	Part designation	Description
50132511	RL-70/40r-003-M12	Ring light, red with 300 mm cable and M12 plug

Tab. 15.11: Accessories – Mounting aids

Part no.	Part designation	Description
50132150	BTU 320M-D12	Mounting system for 12 mm rod
50132151	BT 320M	Mounting bracket
50132453	BTU 320M-D12-RL70	Mounting bracket for ring light

Tab. 15.12: Accessories – fieldbus connection

Part no.	Part designation	Description
50112891	MA 248i	Modular fieldbus connection for field use; interfaces: RS 232 / PROFINET
50112892	MA 208i	Modular fieldbus connection for field use; interfaces: RS 232 / Ethernet TCP/IP
50112893	MA 204i	Modular fieldbus connection for field use; interfaces: RS 232 / PROFIBUS
50114154	MA 235i	Modular fieldbus connection for field use; interfaces: RS 232 / CANopen
50114155	MA 238i	Modular fieldbus connection for field use; interfaces: RS 232 / EtherCAT
50114156	MA 255i	Modular fieldbus connection for field use; interfaces: RS 232 / DeviceNet
50114157	MA 258i	Modular fieldbus connection for field use; interfaces: RS 232 / Ethernet/IP
50132488	KB JST-M12A-12P-50	Interconnection cable for DCR 200i to MA 2xxi modular fieldbus connection

Tab. 15.13: Accessories – Modular connection unit

Part no.	Part designation	Description
50130109	MA 150	Modular connection unit for decentralized distribution of the signals in the machine

Tab. 15.14: Accessories – Ethernet switch

Part no.	Part designation	Description
50135196	MD 708-21-42/D4-12	Ethernet switch with 5 connections
50135197	MD 708-21-82/D4-12	Ethernet switch with 9 connections

16 EC Declaration of Conformity

The code readers of the DCR 200i series have been developed and manufactured in accordance with the applicable European standards and directives.

17 Appendix

17.1 ASCII character set

ASCII	Dec.	Hex.	Oct.	Designation	Meaning
NUL	0	00	0	ZERO	Zero
SOH	1	01	1	START OF HEADING	Start of heading
STX	2	02	2	START OF TEXT	Start of text characters
ETX	3	03	3	END OF TEXT	Last character of text
EOT	4	04	4	END OF TRANSMISS.	End of transmission
ENQ	5	05	5	ENQUIRY	Request for data trans.
ACK	6	06	6	ACKNOWLEDGE	Positive acknowledgment
BEL	7	07	7	BELL	Bell signal
BS	8	08	10	BACKSPACE	Backspace
HT	9	09	11	HORIZ. TABULATOR	Horizontal tabulator
LF	10	0A	12	LINE FEED	Line feed
VT	11	0B	13	VERT. TABULATOR	Vertical tabulator
FF	12	0C	14	FORM FEED	Form feed
CR	13	0D	15	CARRIAGE RETURN	Carriage return
SO	14	0E	16	SHIFT OUT	Shift out
SI	15	0F	17	SHIFT IN	Shift in
DLE	16	10	20	DATA LINK ESCAPE	Data link escape
DC1	17	11	21	DEVICE CONTROL 1	Device control character 1
DC2	18	12	22	DEVICE CONTROL 2	Device control character 2
DC3	19	13	23	DEVICE CONTROL 3	Device control character 3
DC4	20	14	24	DEVICE CONTROL 4	Device control character 4
NAK	21	15	25	NEG. ACKNOWLEDGE	Negative acknowledge
SYN	22	16	26	SYNCHRONOUS IDLE	Synchronization
ETB	23	17	27	EOF TRANSM. BLOCK	End of data transmission block
CAN	24	18	30	CANCEL	Invalid
EM	25	19	31	END OF MEDIUM	End of medium
SUB	26	1A	32	SUBSTITUTE	Substitution
ESC	27	1B	33	ESCAPE	Escape
FS	28	1C	34	FILE SEPARATOR	File separator
GS	29	1D	35	GROUP SEPARATOR	Group separator
RS	30	1E	36	RECORD SEPARATOR	Record separator
US	31	1F	37	UNIT SEPARATOR	Unit separator
SP	32	20	40	SPACE	Space
!	33	21	41	EXCLAMATION POINT	Exclamation point
"	34	22	42	QUOTATION MARK	Quotation mark
#	35	23	43	NUMBER SIGN	Number sign
$	36	24	44	DOLLAR SIGN	Dollar sign
%	37	25	45	PERCENT SIGN	Percent sign

ASCII	Dec.	Hex.	Oct.	Designation	Meaning
&	38	26	46	AMPERSAND	Ampersand
’	39	27	47	APOSTROPHE	Apostrophe
(	40	28	50	OPEN. PARENTHESIS	Open parenthesis
)	41	29	51	CLOS. PARENTHESIS	Closed parenthesis
*	42	2A	52	ASTERISK	Asterisk
+	43	2B	53	PLUS	Plus sign
,	44	2C	54	COMMA	Comma
-	45	2D	55	HYPHEN (MINUS)	Hyphen
.	46	2E	56	PERIOD (DECIMAL)	Period (decimal)
/	47	2F	57	SLANT	Slant
0	48	30	60	0	Number
1	49	31	61	1	Number
2	50	32	62	2	Number
3	51	33	63	3	Number
4	52	34	64	4	Number
5	53	35	65	5	Number
6	54	36	66	6	Number
7	55	37	67	7	Number
8	56	38	70	8	Number
9	57	39	71	9	Number
:	58	3A	72	COLON	Colon
;	59	3B	73	SEMICOLON	Semicolon
<	60	3C	74	LESS THAN	Less than
=	61	3D	75	EQUALS	Equals
>	62	3E	76	GREATER THAN	Greater than
?	63	3F	77	QUESTION MARK	Question mark
@	64	40	100	COMMERCIAL AT	Commercial AT
A	65	41	101	A	Capital letter
B	66	42	102	B	Capital letter
C	67	43	103	C	Capital letter
D	68	44	104	D	Capital letter
E	69	45	105	E	Capital letter
F	70	46	106	F	Capital letter
G	71	47	107	G	Capital letter
H	72	48	110	H	Capital letter
I	73	49	111	I	Capital letter
J	74	4A	112	J	Capital letter
K	75	4B	113	K	Capital letter
L	76	4C	114	L	Capital letter
M	77	4D	115	M	Capital letter

ASCII	Dec.	Hex.	Oct.	Designation	Meaning
N	78	4E	116	N	Capital letter
O	79	4F	117	O	Capital letter
P	80	50	120	P	Capital letter
Q	81	51	121	Q	Capital letter
R	82	52	122	R	Capital letter
S	83	53	123	S	Capital letter
T	84	54	124	T	Capital letter
U	85	55	125	U	Capital letter
V	86	56	126	V	Capital letter
W	87	57	127	W	Capital letter
X	88	58	130	X	Capital letter
Y	89	59	131	Y	Capital letter
Z	90	5A	132	Z	Capital letter
[	91	5B	133	OPENING BRACKET	Opening bracket
\	92	5C	134	REVERSE SLANT	Reverse slant
]	93	5D	135	CLOSING BRACKET	Closing bracket
^	94	5E	136	CIRCUMFLEX	Circumflex
_	95	5F	137	UNDERSCORE	Underscore
`	96	60	140	GRAVE ACCENT	Grave accent
a	97	61	141	a	Lower case letter
b	98	62	142	b	Lower case letter
c	99	63	143	c	Lower case letter
d	100	64	144	d	Lower case letter
e	101	65	145	e	Lower case letter
f	102	66	146	f	Lower case letter
g	103	67	147	g	Lower case letter
h	104	68	150	h	Lower case letter
i	105	69	151	i	Lower case letter
j	106	6A	152	j	Lower case letter
k	107	6B	153	k	Lower case letter
l	108	6C	154	l	Lower case letter
m	109	6D	155	m	Lower case letter
n	110	6E	156	n	Lower case letter
o	111	6F	157	o	Lower case letter
p	112	70	160	p	Lower case letter
q	113	71	161	q	Lower case letter
r	114	72	162	r	Lower case letter
s	115	73	163	s	Lower case letter
t	116	74	164	t	Lower case letter
u	117	75	165	u	Lower case letter

ASCII	Dec.	Hex.	Oct.	Designation	Meaning
v	118	76	166	v	Lower case letter
w	119	77	167	w	Lower case letter
x	120	78	170	x	Lower case letter
y	121	79	171	y	Lower case letter
z	122	7A	172	z	Lower case letter
{	123	7B	173	OPENING BRACE	Opening brace
|	124	7C	174	VERTICAL LINE	Vertical line
}	125	7D	175	CLOSING BRACE	Closing brace
~	126	7E	176	TILDE	Tilde
DEL	127	7F	177	DELETE (RUBOUT)	Delete

17.2 Code samples

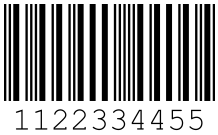

Module 0.3

Fig. 17.1: Code type: 2/5 Interleaved

Module 0.3

Fig. 17.2: Code type: Code 39

Module 0.3

Fig. 17.3: Code type: Codabar

Module 0.3

Fig. 17.4: Code type: Code 128

Module 0.3

Fig. 17.5: Code type: EAN 128

SC 2

Fig. 17.6: Code type: UPC-A

SC 3

Fig. 17.7: Code type: EAN 8

SC 0 S

Fig. 17.8: Code type: EAN 13 add-on

DCR 200i

Fig. 17.9: Code type: DataMatrix ECC200

DCR 200i

Fig. 17.10: Code type: QR Code

Test symbol

Fig. 17.11: Code type: Aztec

DCR 200i series

Fig. 17.12: Code type: PDF417

17.3 Configuration via configuration codes

The code reader can also be configured using configuration codes. The device parameters in the device are set and permanently saved after reading this code.

Configuration changes via the configuration codes are only possible via button activation on the control panel of the device (*AUTO* function).

	NOTICE
	On devices with stainless steel housing, it is not possible to select functions using the control buttons.

Proceed as follows to read in a configuration code:

- Connect the code reader to the operating voltage and activate the *AUTO* function on the control panel.
- Hold the configuration code at the correct distance in front of the optics of the code reader.

	NOTICE
	Read in configuration codes individually! The configuration codes can only be read in individually.

Reset to factory settings (without IP address)

Fig. 17.13: Configuration code: reset to factory settings

Setting the IP address to the Leuze default address

Fig. 17.14: Configuration code: Setting the IP address

DHCP activation

Fig. 17.15: Configuration code: DHCP activation

DHCP deactivation

Fig. 17.16: Configuration code: DHCP deactivation

Activation of reading gate control

Fig. 17.17: Configuration code: Reading gate control activation

Activation of presentation mode

Fig. 17.18: Configuration code: Presentation mode activation

Activation of single trigger mode

Fig. 17.19: Configuration code: Single trigger mode activation

Activation of burst mode

Fig. 17.20: Configuration code: Burst mode activation

Activation of continuous mode

Fig. 17.21: Configuration code: Continuous mode activation

17.4 License terms

This product contains software components that are licensed by the copyright holders as "free software" or as "open source software" under the GNU General Public License, Version 2. We can provide you with the source code of these software components on a data carrier/download (CD-ROM or DVD) if you submit a request to our customer support within three years of distribution of the product at the following address:

Service center

Leuze electronic GmbH + Co. KG

In der Braike 1

D-73277 Owen / Germany

Source code DCR 200i