Technical data sheet
Mounting bracket set

Part no.: 560341

BT-SET-240CC

Figure can vary

Contents

- Technical data
- Dimensioned drawings

ПРОМЭЛЕКТРОНИКА / sales@prom-elec.com

Technical data

Basic data

Suitable for	MLD-M002, MLD-M003 deflecting mirror

Mechanical data

Type of fastening, at system	Through-hole mounting
Type of fastening, at device	Clampable
Type of mounting device	Turning, 240°
Mounting device material	Metal

Classification

Customs tariff number	73269098
eCl@ss 5.1.4	27279202
eCl@ss 8.0	27279202
eCl@ss 9.0	27273701
eCl@ss 10.0	27273701
eCl@ss 11.0	27273701
ETIM 5.0	EC002498
ETIM 6.0	EC003015
ETIM 7.0	EC003015

Dimensioned drawings

All dimensions in millimeters

BT-SET-240C swivel mount

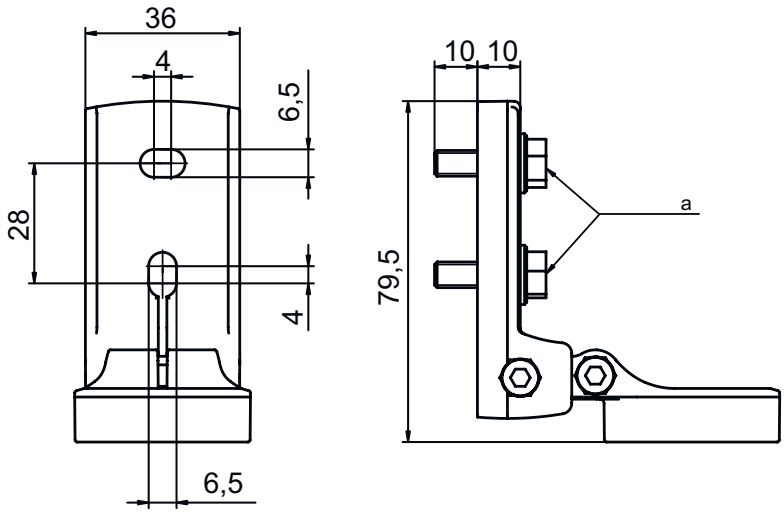

a M6 screw

ПРОМЭЛЕКТРОНИКА / sales@prom-elec.com

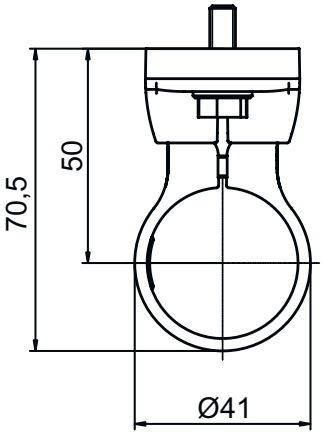

Dimensioned drawings

Mounting dimensions

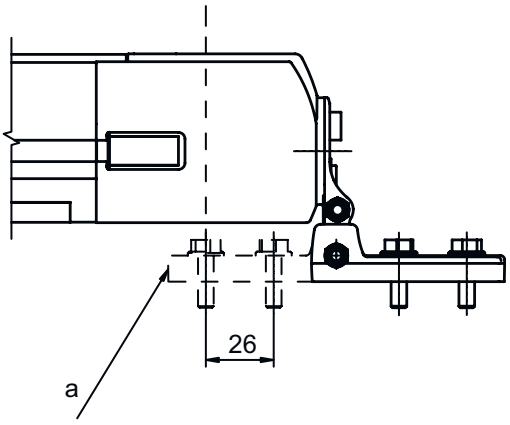

a Alternative mounting variant

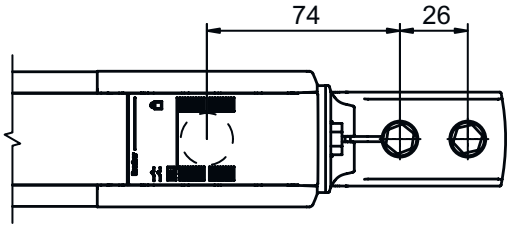
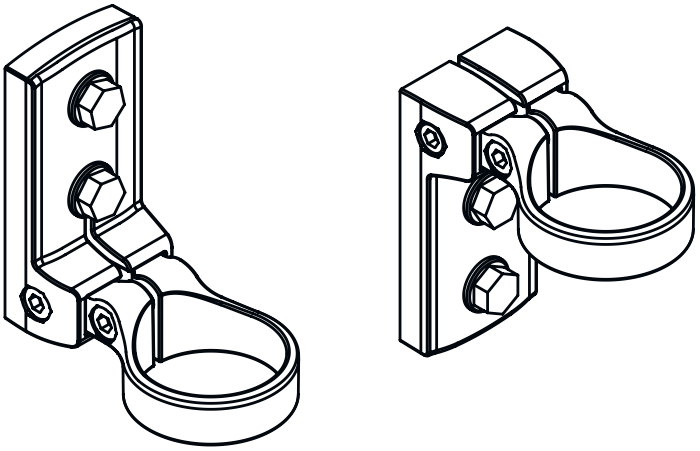
Mounting variants