Leuze electronic

the sensor people

SMART
SENSOR
BUSINESS

MSI 400
Hardware

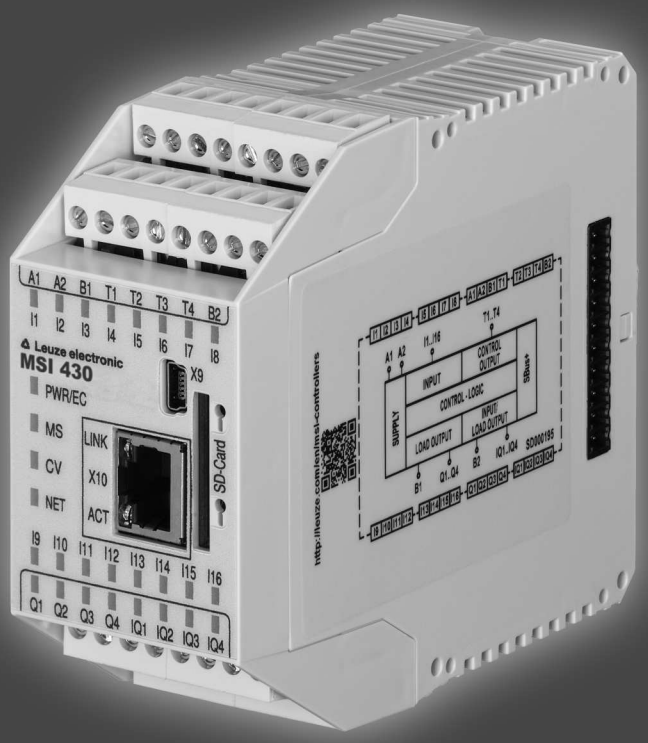

EN 2019/03 - 50134711
We reserve the right to
make technical changes

Translation of the original operating instructions

ПРОМЭЛЕКТРОНИКА / sales@prom-elec.com

© 2019
Leuze electronic GmbH & Co. KG
In der Braike 1
D-73277 Owen / Germany
Phone: +49 7021 573-0
Fax: +49 7021 573-199
http://www.leuze.com
info@leuze.de

1 About this manual ... 6
1.1 Function of this document ... 6
1.2 Target group ... 6
1.3 Information depth ... 6
1.4 Scope of validity and applicable documents ... 7
1.5 Abbreviations used ... 7
1.6 Symbols/icons and writing style/spelling standard used ... 8
1.7 Copyright and right to make changes ... 8

2 Safety ... 10
2.1 Qualified persons ... 10
2.2 Areas of application of the device ... 10
2.3 Proper use ... 11
2.4 General safety information and protective measures ... 12
2.5 Environmentally friendly behavior ... 13
2.5.1 Disposal ... 13
2.5.2 Sorting of materials ... 13

3 Product description ... 14
3.1 System properties ... 14
3.2 System setup ... 15
3.3 Version, compatibility, and features ... 16
3.4 Controller module MSI 410 ... 17
3.4.1 Description ... 17
3.4.2 Display elements, interfaces, and terminal description ... 17
3.4.3 Internal circuits ... 18
3.4.4 Limited short-circuit detection in the input circuits ... 19
3.4.5 Deactivating the test pulses at the outputs ... 19
3.4.6 Single-channel use of outputs ... 20
3.5 Controller module MSI 420 ... 21
3.5.1 Description ... 21
3.5.2 Display elements, interfaces, and terminal description ... 21
3.5.3 Internal circuits ... 23
3.5.4 Limited short-circuit detection in the input circuits ... 23
3.5.5 Deactivating the test pulses at the outputs ... 24
3.5.6 Single-channel use of outputs ... 24
3.6 Controller module MSI 430 ... 25
3.6.1 Description ... 25
3.6.2 Display elements, error codes, and terminal description ... 25
3.7 Controller modules MSI 410.F50, MSI 420.F50 und MSI 430.F50 ... 26
3.8 MSI-SD-CARD removable storage ... 26
3.8.1 Description ... 26
3.8.2 Files on the removable storage ... 26
3.9 MSI-EM-IO84 input/output expansion module ... 28
3.9.1 Description ... 28
3.9.2 Display elements and terminal assignment ... 28
3.9.3 Internal circuits ... 30
3.9.4 Deactivating the test pulses at the outputs ... 31
3.9.5 Single-channel use of outputs ... 31
3.10 MSI-EM-I8 input expansion module ... 32
3.10.1 Description ... 32
3.10.2 Display elements and terminal assignment ... 33
3.10.3 Internal circuits ... 34

3.11 MSI-EM-IO84NP input/output expansion module ... 35
3.11.1 Description ... 35
3.11.2 Display elements and terminal assignment ... 36
3.11.3 Internal circuits ... 37

4 Connecting devices ... 39

4.1 Safety command devices and electromechanical safety switches ... 41
4.1.1 Emergency stop button ... 41
4.1.2 Electromechanical safety switch without lock ... 41
4.1.3 Electromechanical safety switch with lock ... 42
4.1.4 Enable switch ... 43
4.1.5 Two-hand control ... 43
4.1.6 Safety mats and bumper ... 44
4.1.7 Connection of multiple safety mats/bumpers ... 46
4.1.8 Mode selection switch ... 46
4.1.9 Potential-free contacts ... 46

4.2 Contactless safety sensors ... 47
4.2.1 Magnetic safety switches ... 47
4.2.2 Inductive safety switches ... 48
4.2.3 Transponder switches ... 48

4.3 Testable single-beam safety light barriers ... 49
4.3.1 Testable type 2 single-beam safety light barriers ... 49
4.3.2 Testable type 4 single-beam safety light barriers ... 49
4.3.3 Customer-specific testable single-beam safety light barriers ... 50
4.3.4 Information on installing testable single-beam safety light barriers ... 50

4.4 ESPE – Electro-sensitive protective equipment ... 52

4.5 Motion monitoring ... 52
4.5.1 Sensors and hardware ... 53
4.5.2 Sensors and attainable safety level ... 62

4.6 Safety outputs ... 80

5 Special functions ... 81

5.1 Muting ... 81

6 Installing/removing ... 82

6.1 Installing modules on hat rail ... 82

6.2 Removing modules from the hat rail ... 86

7 Electrical installation ... 88

7.1 Requirements for electrical installation ... 88

7.2 Internal wiring of the supply voltage ... 90

8 Configuration ... 91

9 Commissioning ... 92

9.1 Total acceptance of the application ... 92

9.2 Tests before initial commissioning ... 92

10 Diagnostics ... 93

10.1 What to do in the event of an error ... 93

10.2 Error statuses ... 93

10.3 Error displays of the status LEDs ... 94
10.3.1 Device state and LED displays in the controller modules ... 95
10.3.2 Device state and LED displays in the safe input/output modules ... 97
10.3.3 Device state and LED displays in the standard input/output modules ... 98

10.4 Support ... 100
10.5 Expanded diagnostics ... 100

11 Maintenance ... 101

11.1 Regular testing of the safety equipment by qualified persons ... 101
11.2 Replacing devices ... 102
11.2.1 Safety measures when replacing devices ... 102

12 Technical data ... 103

12.1 System response times ... 103
12.1.1 Minimum switch-off time ... 105
12.1.2 Response time of the state flag ... 105
12.1.3 Default values for non-secure or secure data ... 105
12.2 Response times for motion monitoring ... 105
12.2.1 Safety response times of the logic ... 106
12.2.2 Error detection times ... 107
12.3 Safety technology reference values ... 108
12.3.1 Controller modules without I/O expansion ... 108
12.3.2 Controller modules with safe I/O expansions ... 109
12.4 Data sheet ... 110
12.4.1 Controller module ... 110
12.4.2 Safe input/output expansion module ... 113
12.4.3 Safe input expansion module ... 115
12.4.4 Standard input/output expansion module ... 117
12.5 Dimensional drawings ... 119
12.5.1 Controller module ... 119
12.5.2 Input/output expansion modules ... 120

13 Order data ... 121

13.1 Hardware modules and accessories ... 121
13.2 Modules for contact expansion ... 123

14 Appendix ... 124

14.1 Declaration of Conformity ... 125
14.2 Checklist for manufacturers ... 129
14.3 List of all error messages, causes and aids ... 130

1 About this manual

Please read this section and the *Safety [chapter 2]* section carefully before documenting or working with the modular MSI 400 safety control the corresponding MSI 400 modules.

1.1 Function of this document

There are three manuals for the MSI 400 system with clearly delineated areas of application as well as installation instructions and brief instructions for each module.

- **This hardware manual** describes in-detail all modules that can be used with a MSI 4xx controller module and their functions. Use the hardware manual mainly for planning MSI 400 safety controls.
  This manual will guide **technical personnel of the machine manufacturer** and/or **machine operator** on safe installation, electric installation, commissioning, and maintenance of the modular MSI 400 safety control.
  These manual does **not** provide instructions for operating the machine into which the safety control is or will be integrated. Instructions on how to operate the machine are provided for this purpose.
- The **software manual** describes the software-supported configuration and parameterization of the MSI 400 safety control. In addition, the software manual contains a description of the important diagnostic functions for operation and detailed information for identifying and eliminating errors. Use the software manual mainly when configuring, commissioning and operating MSI 400 safety controls.
- The **gateway manual** describes in-detail the MSI 400 gateways and their functions.
- Each module contains the **installation instructions/brief instructions**. These instructions provide information on the fundamental technical specifications of the modules and contain simple installation instructions. Use the installation instructions/brief instructions when installing the MSI 400 safety control.

This manual contains original operating instructions in accordance with the Machinery Directive.

1.2 Target group

This manual is targeted toward **designers**, **developers,** and **operators** of systems that are to be safeguarded by a modular MSI 400 safety control.

It is also targeted toward persons integrating a MSI 400 safety control into a machine, commissioning it for the first time, or maintaining such a system.

1.3 Information depth

This manual contains information on the modular MSI 400 safety control with respect to the following topics:

- Installation
- Electrical installation
- Hardware commissioning
- Maintenance
- Error diagnostics and error elimination
- Item numbers
- Conformity and approval

Furthermore, specialized technical knowledge that is not provided in this document is required when designing and using Leuze safety equipment.

Essentially, governmental and legal regulations must be adhered to when operating the modular MSI 400 safety control.

Downloads are provided on the internet

Also consult our website on the Internet. At the following link http://www.leuze.com, you will find:

- the MSI.designer software
- The MSI 400 manuals available for display and printing in various languages:
  - This hardware manual (50134711)
  - The software manual (50134713)
  - The gateway manual (50134715)

1.4 Scope of validity and applicable documents

This manual is valid for all MSI 400 safety control modules that are operated in connection with MSI 4xx and MSI.designer controller modules.

Tab. 1.1: Overview of the MSI 400 documentation

Document	Title	Item number
Software manual	MSI.designer Software	50134713
Hardware manual	MSI 400 Hardware	50134711
Gateway manual	MSI 400 Gateways	50134715
Operating instructions	MSI 400	50134613
Operating instructions	MSI-EM-IO84-xx / MSI-EM-I8-xx	50134614
Operating instructions	MSI-EM-IO84NP-xx	50134615
Operating instructions	MSI-FB-CANOPEN	50134616
Operating instructions	MSI-FB-PROFIBUS	50134617
Operating instructions	MSI-FB-ETHERCAT	50134618

1.5 Abbreviations used

ESPE	Contactless protection unit, light curtain
Bypass	You can use a bypass input to set the release to 1, regardless of the system status. As a result, the calculation of the releases by the FB is overruled by the Bypass.
Logic cycle time	Processing time of the user program. Appears in the status line of MSI.designer and in the MSI.designer report
EDM	External Device Monitoring = Contact monitor
Muting	The muting input can be used to hold a current release on 1 for as long as the muting input is activated. Only the releases that were already previously set to 1 are muted.
OSSD	Output Signal Switching Device = Signal output that activates the safety circuit
PFHd	Probability of Dangerous Failure per Hour
Process Safety Time	Predetermined total time during which the safe subsystem has to detect the need for a safe state and subsequently switch to this state.
PST	Process Safety Time
SIL	Safety Integrity Level
PLC	Programmable logic controller
CPU cycle time	Internal system cycle time
Reset	User-controller reset of an internal FB monitoring error via an FB input. A reset is only effective when the reason for the error was previously eliminated by the user. The request to press Reset is displayed in advance by the Reset required FB output.
Restart	The user can agree to a release via the Restart input. The request to press Restart is displayed in advance by the Restart required FB output. On starting the control, Restart is used to remove a startup lock.

SLS	Safely Limited Speed The *Safely Limited Speed function* SLS (EN 61800-5-2) is used when safety within the danger zone of a drive is only guaranteed up to a defined speed. The drive is monitored for a maximum permitted speed. The release output of the SLS function prevents the motor from exceeding the specified speed limit.
SSM	Safe Speed Monitor The *Safe Speed Monitor* function SSM (EN 61800-5-2) is used when safety within the danger zone of a drive is only guaranteed at a reduced speed and in a defined rotational direction. The drive is monitored for a maximum permitted speed and a defined rotational direction. If a limit is not exceeded, the release output is set.
SSR	Safe Speed Range A combination of SLS and SSM, with which upper and lower limit speeds can be monitored.
SLP	Safely Limited Position The *Safely Limited Position* function SLP (EN 61800-5-2) is used when safety within the danger zone of a drive is only guaranteed in one or several defined positions.
SDI	Safe Direction The *Safe Direction* function SDI (EN 61800-5-2) is used when the safety or function of a drive is only guaranteed in a defined direction of rotation or travel. The drive is monitored for an approved rotational direction. If a movement is detected in the opposite direction, the release output is reset.

1.6 Symbols/icons and writing style/spelling standard used

	NOTICE
	These are notes that provide you with information regarding particularities of a device or a software function.

	WARNING
	Warning! A warning lets you know about specific or potential hazards. It is intended to protect you from accidents and help prevent damage to devices and systems. ↳ **Please read and follow the warnings carefully!** Failure to do so may negatively impact the safety functions and cause a hazardous state to occur.

Menus and commands

The names of software menus, submenus, options, and commands, selection fields, and windows are written in **bold font**. Example: Click on **Edit** in the **File** menu.

1.7 Copyright and right to make changes

Copyright

This document is copyright-protected. The rights derived from this copyright are reserved for Leuze electronic. Reproduction of this document or parts of this document is only permissible within the limits of the statutory provision of the Copyright Act. Any modification or abridgment of the document is prohibited without the express written agreement of Leuze electronic.

Allen-Bradley, CompactBlock Guard I/O, CompactLogix, ControlFLASH, ControlLogix, DH+, FactoryTalk, FLEX, GuardLogix, Kinetix, Logix5000, MicroLogix, PanelBuilder, PanelView, PhaseManager, PLC-2, PLC-3, PLC-5, POINT I/O, POINT Guard I/O, Rockwell Automation, Rockwell Software, RSBizWare, RSFieldbus, RSLinx, RSLogix 5000, RSNetWorx, RSView, SLC, SoftLogix, Stratix, Stratix 2000, Stratix 5700, Stratix 6000, Stratix 8000, Stratix 8300, Studio 5000, Studio 5000 Logix Designer, SynchLink, and Ultra are registered trademarks of Rockwell Automation, Inc.

ControlNet, DeviceNet, and EtherNet/IP are registered trademarks of ODVA, Inc.

TwinCAT is a registered trademark of Beckhoff Automation GmbH.

EtherCAT is a registered trademark and a patented technology licensed by Beckhoff Automation GmbH.

Microsoft, Windows 98, Windows NT, Windows 2000, Windows XP, Windows 7, Windows 8, Windows 8.1, Windows 10 and .NET Framework are registered trademarks of the Microsoft Corporation.

Any other product or trade names listed in this manual are the trademarks or registered trademarks of the respective owners.

Subject to change.

Subject to technical changes for reasons of continued development.

2 Safety

This section is intended to support your safety and the safety of the system users.

↳ Please read this section carefully before you work with a MSI 400 system.

2.1 Qualified persons

The modular MSI 400 safety control may only be installed, commissioned, and maintained by qualified persons.

Qualified persons are those who

- have suitable technical training **and**
- have been trained by the machine operator in the operation and applicable safety guidelines **and**
- have access to the MSI 400 operating instructions and have read said instructions and have duly noted these **and**
- have access to the operating instructions for the safety devices connected to the safety control (e.g. safety light curtain) and have read them and duly noted them.

2.2 Areas of application of the device

The modular MSI 400 safety control is an adjustable control for safety applications. It is usable

- as per EN 61508 up to SIL 3
- as per EN 61131-6 up to SIL 3
- as per EN 62061 up to SIL CL 3
- as per EN ISO 13849-1:2015 to performance level e / category 4
- as per EN 81-1
- as per EN 50156-1
  - The safety function must be tested at least once annually
  - A consistent redundant structure must be implemented
  - If relay expansion modules are used, the correct switching of the relays must be monitored using feedback contacts (EDM)
  - The requirements of EN 50156-1, Section 10.5.6, must be considered

The level of safety actually achieved depends on the external wiring, the implementation of the wiring, the parameterization, the selection of the command encoder, and their arrangement on the machine.

Opto-electronic and tactile safety sensors (e.g. light curtains, laser scanners, safety switches, sensors, emergency stop switches) are connected and logically linked at the modular safety control. The corresponding actuators on the machine or systems can be securely switched off via the switch outputs of the safety control.

2.3 Proper use

The modular MSI 400 safety control may only be operated under the following conditions:

- You are operating the control within the specified operating limits for voltage, temperature, etc. (see the following for further information: *Technical data [chapter 12]*)
- You are operating the control within the specified areas of application. (Further information: *Areas of application of the device [chapter 2.2]*)

WARNING

Restrictions for Ethernet connections

- The Ethernet connection can only be linked to autonomous networks or demilitarized zones (DMZ).
- The device must never be connected directly to the Internet.
- Always use secure data tunnels (VPN) to exchange data via the Internet.

The control may only be operated by qualified personnel and may only be used on a machine on which it has been installed and commissioned for the first time by a qualified person in accordance with this manual.

In the event of any other use or any changes to the device – including within the scope of installation – this shall nullify any warranty claim with respect to Leuze electronic GmbH.

- The external power supply of the devices must able to bridge a short-term power outage of 20 ms in accordance with EN 60204. Suitable PELV- and SELV-capable power packs can be obtained as accessories from Leuze electronic.
- The modules for the MSI 400 system correspond to class A, group 1, in accordance with EN 55011. Group 1 includes all ISM devices in which intentionally generated and/or wired HF power, which is required for the internal function of the device itself, occurs.
- If you wish to use the MSI 400 system for domestic purposes, you need to take additional steps to prevent the emission of radio frequency interference in limit class B according to EN 55011. Here are some steps you might take:
  - The use of interference suppressor filters in the supply circuit
  - Installation in grounded switch cabinets or boxes

UL/CSA applications:

- Use lines that are suitable for a temperature range of 60 to 75°C.
- Tighten the screw terminals with a torque of 5-7 lbs/in.
- Only use in a pollution degree 2 environment.
- The modules must be supplied by a voltage source with protective isolation, which is protected by a fuse in accordance with UL 248 with a nominal power of 100 V, wherein V corresponds to the direct current power supply with a maximum value of 42.4 V DC, which means that the requirements of UL 508 for the current and voltage limits are met.
- The maximum permissible total current for the MSI-EM-IO84 modules with outputs Q1 to Q4 is I_{total} = 3.2 A.

NOTICE

The safety functions are not evaluated by UL. The approval corresponds to UL508, general applications.

2.4 General safety information and protective measures

WARNING	
	Note the safety information and protective measures! Note the following points in order to ensure proper use of the MSI 400 safety control.

- Please follow the standards and guidelines valid in your country when installing and using the MSI 400 safety control.
- The national/international legal regulations apply to the installation and use of the safety control as well as for the commissioning and repeated technical testing, particularly the following:
  - Machinery Directive 2006/42/EC
  - EMC Directive 2014/30/EU
  - Work Equipment Directive 2009/104/EC
  - Low-Voltage Directive 2014/35/EU
  - The accident prevention regulations/safety rules
  - RoHS (Restriction of Hazardous Substances) Directive 2011/65/EU
- Manufacturers and operators of a machine on which a MSI 400 safety control is being used are responsible for coordinating with the proper authorities with regard to applicable safety guidelines/rules and complying with these.
- The notices, particularly the test notices, must be observed without fail.
  Further information: *Requirements for electric installation [chapter 7.1]*
  The tests must be conducted by qualified persons or by those who are personally authorized and commissioned to do so and must always be fully documented at all times by a third-party.
- This manual must be provided to the operator of the machine on which the MSI 400 safety control is being used. The machine operator must be trained by qualified persons and is required to read this manual.

2.5 Environmentally friendly behavior

The modular MSI 400 safety control and the corresponding modules are designed such that they stress the environment as little as possible. They use only a minimum of power and resources.

- Make sure that you also carry out work while always considering the environment.

2.5.1 Disposal

The disposal of unusable or irreparable devices should always be done in accordance with the respectively valid country-specific waste-elimination guidelines (e.g. European Waste Code 16 02 14).

	NOTICE
	We will be happy to help you in disposing of these devices. Simply contact us.

2.5.2 Sorting of materials

	WARNING
	Important information - The sorting of materials may only be carried out by qualified persons! - Care must be used when disassembling the devices. There is a risk of injuries during this process.

Before you can route the devices to the environmentally-friendly recycling process, it is necessary to sort the various materials of the MSI 400 devices.

- Separate the housing from the rest of the components (particularly from the PC board).
- Place the separated components into the corresponding recycling containers (see the following table).

Tab. 2.1: Overview of disposal according to components

Components	Disposal
Product	
Housing	Plastic recycling
PC boards, cables, connectors, and electric connecting pieces	Electronics recycling
Packaging	
Cardboard, paper	Paper/cardboard recycling

3 Product description

This section will provide you with information on the properties of the MSI 400 system and describes the setup and function.

3.1 System properties

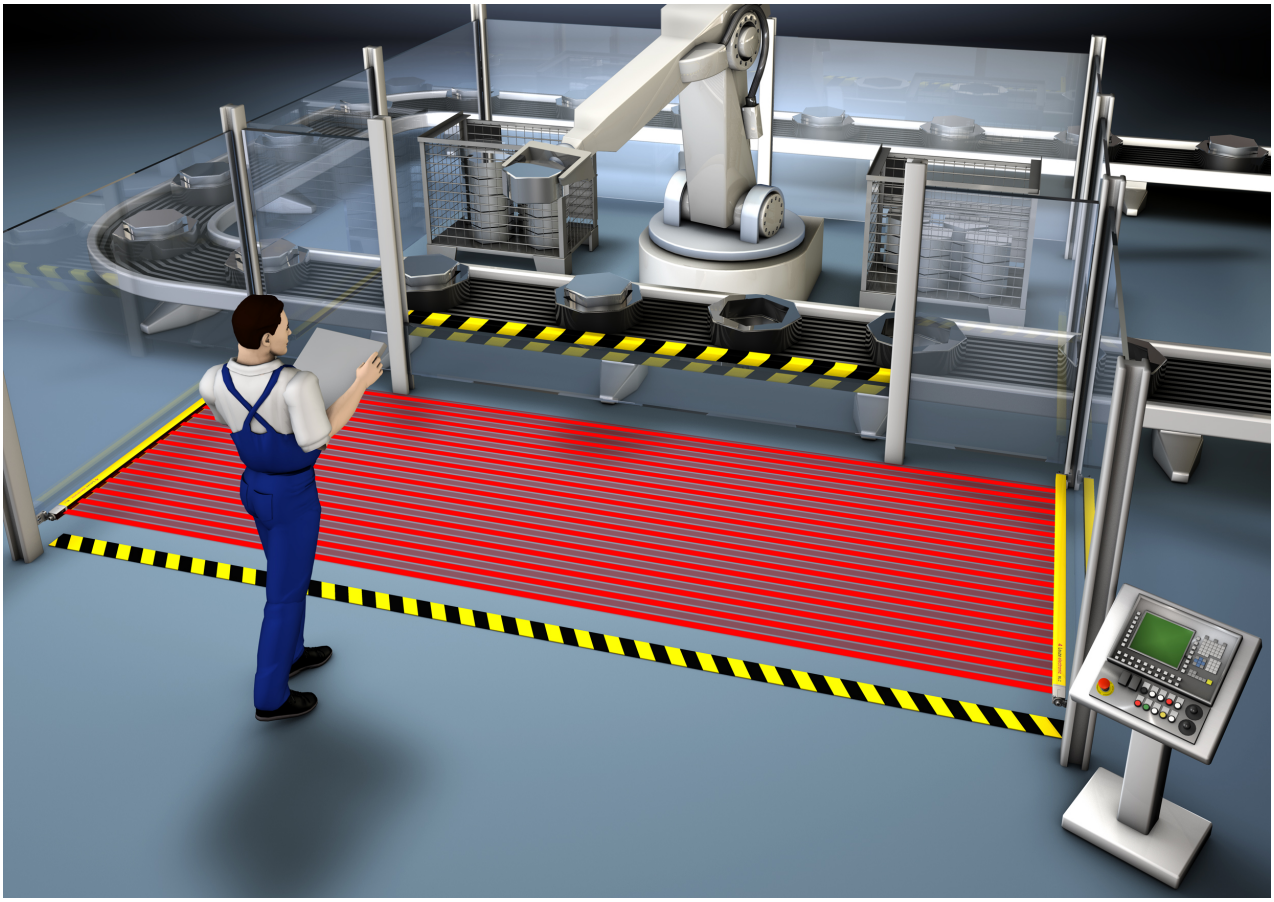

Fig. 3.1: Modular MSI 400 safety control

The MSI 400 system is characterized by the following system properties:

- Modular structure with:
  1 controller module and up to 12 input/output expansion modules, each of which has an overall width of 22.5 mm
- 16 to 116 inputs and 4 to 56 outputs
- They can be programmed using the MSI.designer software
- Can use up to 300 standard and application-specific logical blocks
- Standard logical blocks: AND, OR, NOT, XNOR, XOR
- Application-specific logical blocks: Emergency stop, two-hand, muting, operating mode selection switch, reset, restart
- Can be integrated into different networks using gateways (e.g. ProfibusDP, CANopen, Modbus/TCP, etc.)

The MSI.designer programming software is available for configuring the control tasks. It can be *downloaded [chapter 1.3]* on our website on the Internet.

ПРОМЭЛЕКТРОНИКА / sales@prom-elec.com

3.2 System setup

A MSI 400 system consists of the following modules and/or components:

- 1 Controller module
- 1 Program removable storage
- MSI.designer programming software
- Up to 2 gateway modules
- Up to 12 additional MSI-EM-IO84, MSI-EM-I8 and MSI-EM-IO84NP input/output modules
- In addition, MSI-XX expansion modules can be used. This may be, for example, the MSI-SR-SM42OS standstill monitor or the relay output expansions.
  These modules are shown in the report from MSI.designer but cannot be logically connected to the modules of the MSI 400 system.
  Further information: Software manual, chapter "Special case: Expansion module MSI-XX"

Examples

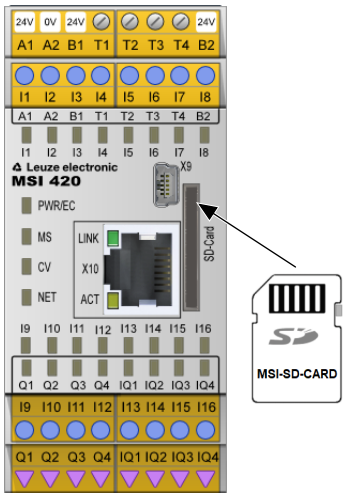

Fig. 3.1: Example of a minimum MSI 400 system setup with a MSI 420/430 controller module

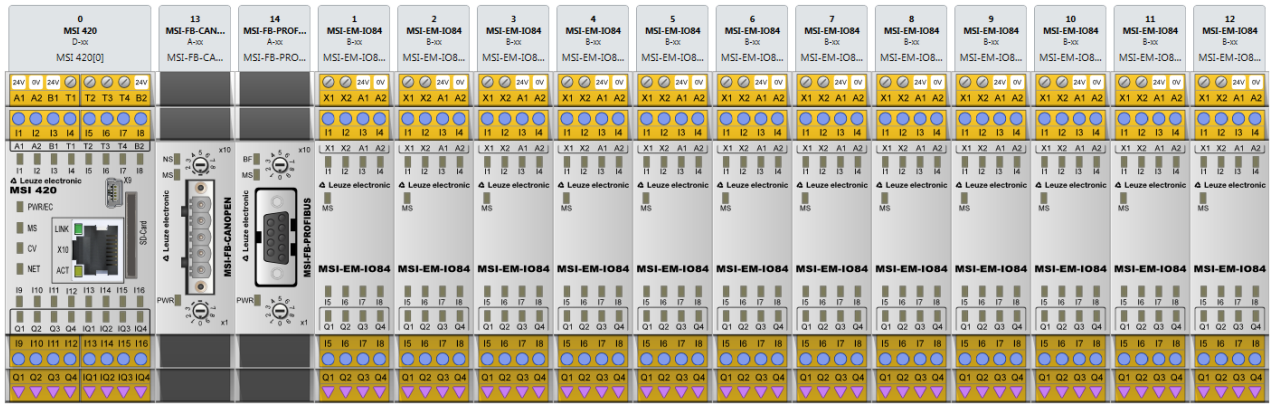

Fig. 3.2: Example 2 - Maximum expansion of a MSI 400 system

Tab. 3.1: Overview of modules (without program removable storage)

Type	Description	Inputs	Outputs	Logical blocks	Max. occurrence
MSI 410	Controller module	20	4	300	1×
MSI 420	Controller module	16-20 [1)]	4-8[1)]	300	1x
MSI 430	Controller module	16-20 [1)]	4-8[1)]		
MSI-EM-IO84	Input/output expansion	8	4	–	12x
MSI-EM-I8	Input expansion	8	–	–	

Type	Description	Inputs	Outputs	Logical blocks	Max. occurrence
MSI-EM-IO84NP	Standard input/output module	8[1)]	8[1)]	–	12×
MSI-FB-PROFIBUS	PROFIBUS DP gateway	–	–	–	2×
MSI-FB-CANOPEN	CANopen gateway	–	–	–	
MSI-FB-ETHERCAT	EtherCAT Gateway	–	–	–	
[1)] 4 inputs or 4 outputs can be configured as an option					

3.3 Version, compatibility, and features

There are various module versions and function packages for the MSI 400 product family that enable various functions. This section will give you an overview as to which module version, which function package, and/or which version of the MSI.designer you will need to be able to use a certain function or a certain device.

Tab. 3.2: Benötigte Modul- und Softwareversionen

Feature / functionality	Available with module version	Available with module variant	MSI.designer
Safe I/O (MSI-EM-IO84 , MSI-EM-I8)	D-01.xx	all	V1.0
Non-secure E/A (MSI-EM-IO84NP)	D-01.xx		
EtherCAT (MSI-FB-ETHERCAT)	D-01.xx		
Extended security functions	E-01.xx		V2.2
Modbus TCP	D-01.xx	MSI 430-x MSI 430.F50-x	V1.0
PROFINET IO	D-01.xx		
EtherNet/IP	D-01.xx		
Press functions	D-01.xx	MSI 410.F50-x MSI 420.F50-x MSI 430.F50-x	
Standstill monitor	D-03.xx		V2.0
Motion	E-01.xx		V2.2

Info

- You can find the module version on the type plate of the modules.
- You will find the MSI.designer software version in the main menu.
- The latest software version is available in the Internet at the following address http://www.leuze.com.
- Newer modules are backwards-compatible, which means that each module can be replaced with a module having a higher module version.
- You can find the date of manufacture for a device on the type plate in the **S/N** field in the format <Product no.>yywwnnnnn (yy = year, ww = calendar week).

3.4 Controller module MSI 410

3.4.1 Description

The MSI 410 controller module is a central processing unit for the entire system in which all of the signals are monitored and logically processed according to the configuration stored in the MSI-SD-CARD program removable storage. The module has safe inputs and outputs as well as test signal outputs. The system outputs are switched as a result of the processing. The internal safety bus in this case serves as a data interface.

3.4.2 Display elements, interfaces, and terminal description

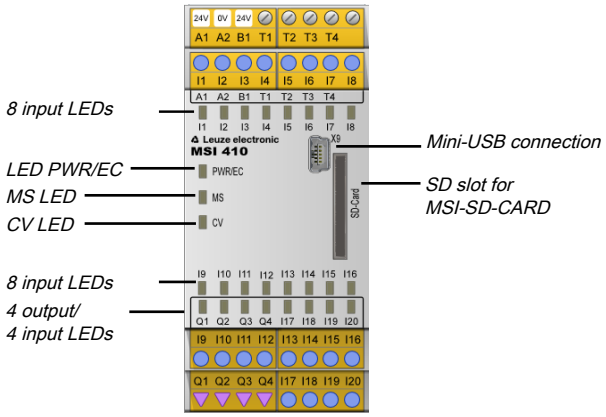

Fig. 3.3: MSI 410 display elements

Tab. 3.3: 4 LED displays

LED	Meaning
PWR/EC	Green: Display of the supply voltage state Red: Display of an error through various *Flashing codes [chapter 10.3.1]*
MS	Display of the *Module state [chapter 10.3.1]*
CV	Display of the verification state of the *Control project [chapter 10.3.1]*
I1 - I20	State display of the *Inputs [chapter 10.3.1]*
Q1 - Q4	State display of the *Outputs [chapter 10.3.1]*

Tab. 3.4: Terminal assignment MSI 410

Terminal	assignment
A1	24 V supply voltage for all modules, except for supply of outputs
A2	GND of supply voltage
I1 - I20	Safe digital inputs
Q1 - Q4	Safe digital outputs
B1	24 V supply voltage of outputs Q1 - Q4
T1 - T4	Test signal outputs

USB interface

The controller module has a mini-USB interface with the following functions:

- Transfer of the configuration from MSI.designer to the program removable storage
- Reading of configuration from program removable storage in MSI.designer
- Diagnostics of the MSI 400 system with MSI.designer

Tab. 3.5: USB interface pin assignment

Connector/ bushing USB mini	Pin	Signal	Color	Assignment, PC side
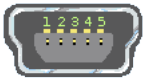	1	+5V		
	2	- data		
	3	+ data		
	5	GND		

NOTICE

- If the USB interface of the controller module is permanently connected, then the maximum permissible cable length is 3 m.
- Avoid using ground loops between the GND of the USB interface and the A2 connection of the controller module, e.g. by using USB insulators (galvanic separation).

3.4.3 Internal circuits

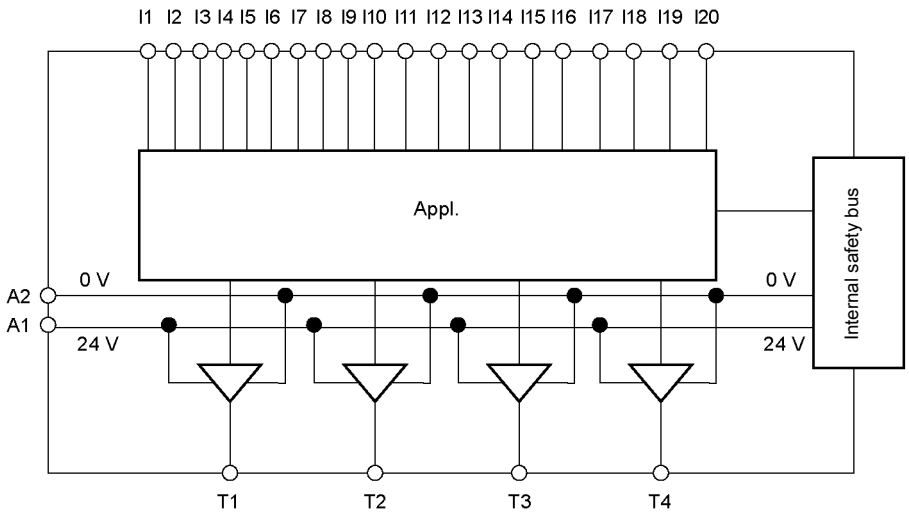

Fig. 3.4: Inputs and test outputs at an MSI 410 module

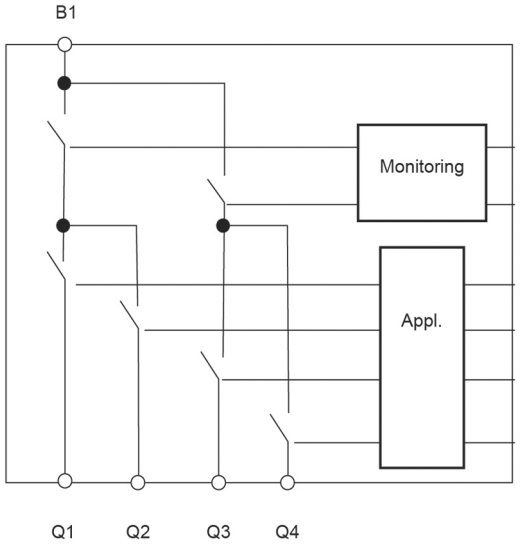

Fig. 3.5: Outputs at an MSI 410 module

3.4.4 Limited short-circuit detection in the input circuits

WARNING	
	↳ Short-circuits between the test signal outputs T1–T4 of a module MSI 4xx are detected as an error. ↳ Short-circuits between the test signal outputs of multiple modules MSI 4xx can only be detected when the test gaps of the test signal generators are < 41 ms and the test periods are ≥ 200 ms. Short-circuits to 24 V DC (after High) at inputs that are connected to test outputs are detected independently of the length of the test gaps. **Take note of this during wiring, e.g. by using separate routing or protected lines!**

3.4.5 Deactivating the test pulses at the outputs

It is possible to deactivate the test pulses at one or more output pairs. The outputs of a MSI 410 module are combined into two output pairs. Q1/Q2 and Q3/Q4. The test pulses each act upon the two outputs of an output pair.

WARNING	
	Switching off the test pulses at one of the two outputs of an output switches off the test pulses of the entire output pair! Deactivating the test pulses at one or more safety outputs of a MSI 4xx module reduces the safety parameters of both safety outputs of the respective output pair of this module. ↳ Take this into account in the risk analysis and risk avoidance strategy of your application. ↳ You can find more detailed information on the safety parameters here: *Safety technology reference values [chapter 12.3]*

WARNING	
	Be sure to use protected or separate cabling! ↳ If you deactivate the test pulses at one or more safety outputs, short-circuits at other output circuits cannot be detected. This affects the safety function! ↳ In the event of a short-circuit after 24 V, it will no longer be possible to switch off the output. In addition, it will not be possible to prevent reverse current from going into a switched-off output, which will influence the capability of switching off the outputs.

	WARNING
	Carry out cyclic tests when the test pulses at one or more safety outputs are deactivated! If you deactivated the test pulses on one or more safety outputs, carry out the following tests once a year: ↳ Switch off all the safety outputs without test pulses simultaneously for at least one second using the logic program of the controller module. OR ↳ Restart the MSI 400 system by switching off the power supply and switching it on again.

You will thus deactivate the test pulses at an output of an MSI 410 module

- ↳ In MSI.designer, select an actuator and place it on a logic page.
- ↳ Using the right mouse button, click the actuator and select the **Properties** command in the context menu.
- ↳ Place a checkmark by **No test pulses**.
  In the module overview, information about the switched off test pulses is displayed under the appropriate output (e.g. Q1: “Test pulses are deactivated!”).

3.4.6 Single-channel use of outputs

	WARNING
	Be sure to consider a potential brief switch to high with single-channel safety outputs! If an internal hardware error occurs in the output circuit, single channel safety outputs can switch to High for approx. 10 ms after the error was detected. ↳ Consider this during your risk analysis and reduction strategy. Otherwise, there is a hazard for the operator of the machine.

3.5 Controller module MSI 420

3.5.1 Description

The MSI 420 controller module is the central processing unit for the entire system in which all of the signals are monitored and logically processed according to the configuration stored in the MSI-SD-CARD program removable storage. The module has safe inputs and outputs as well as test signal outputs. The system outputs are switched as a result of the processing. The internal safety bus in this case serves as a data interface.

3.5.2 Display elements, interfaces, and terminal description

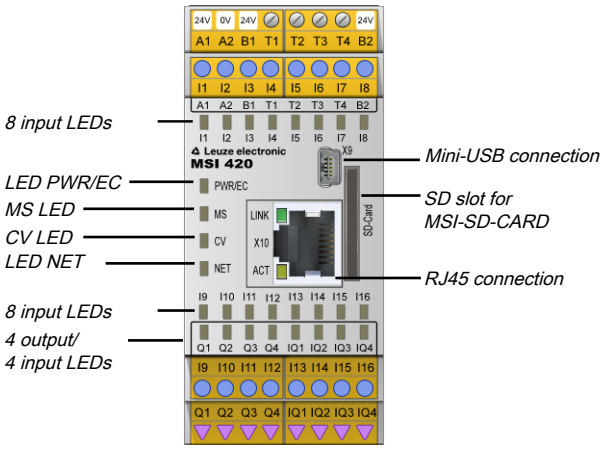

Fig. 3.6: Display elements of a MSI 420 module

Tab. 3.6: MSI 420/430 LED displays

LED	Meaning
PWR/EC	Display of the supply voltage state Display of an error through various *Flashing codes [chapter 10.3.1]*
MS	Display of the *Module state [chapter 10.3.1]*
CV	Display of the verification state of the *Control project [chapter 10.3.1]*
Input LED I1 to I16, IQ1 to IQ4	State display of the *Inputs [chapter 10.3.1]*
Output LED Q1 to Q4, IQ1 to IQ4	State display of the *Outputs [chapter 10.3.1]*

Tab. 3.7: MSI 420/430 pin assignment

Pin	assignment
A1	24 V supply voltage for all modules, except for supply of outputs
A2	GND of supply voltage
I1 - I16	Safe, digital inputs
Q1 - Q4	Safe, digital outputs
IQ1 - IQ4	Safe, digital inputs or outputs (configurable through MSI.designer)
B1	24 V supply voltage of outputs Q1 - Q4
B2	24 V supply voltage of configurable outputs IQ1 - IQ4
T1 - T4	Test signal outputs

USB interface

The controller module has a mini-USB interface with the following functions:

- Transfer of the configuration from MSI.designer to the program removable storage
- Reading of configuration from program removable storage in MSI.designer
- Diagnostics of the MSI 400 system with MSI.designer

Tab. 3.8: USB interface pin assignment

Connector/ bushing USB	Pin	Signal
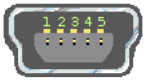	1	+5V
	2	- data
	3	+ data
	5	GND

NOTICE

- If the USB interface of the controller module is permanently connected, then the maximum permissible cable length is 3 m.
- Avoid using ground loops between the USB interface GND and the A2 connection of the controller module, e.g. by using optocouplers.

Ethernet interface

The controller module has an Ethernet interface with the following functions:

- Transfer of the configuration from MSI.designer to the program removable storage
- Reading of configuration from program removable storage in MSI.designer
- Diagnostics of the MSI 400 system with MSI.designer
- Continuous diagnosis of the MSI 400 system via a connected PLC

Tab. 3.9: RJ 45 bushing pin assignment

Connector/bushing RJ45	Pin	Signal (Auto MDI-X)
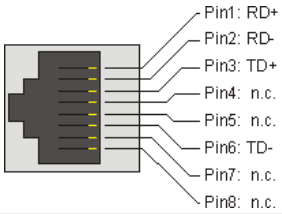	1	RD+ / TD+
	2	RD- / TD-
	3	TD+ / RD+
	6	TD- / RD-

The device automatically detects which cable type (patch cable or cross-link cable) is being used (Auto MDI-X), which is why the pin assignment does not matter with regard to the RD or TD signals.

3.5.3 Internal circuits

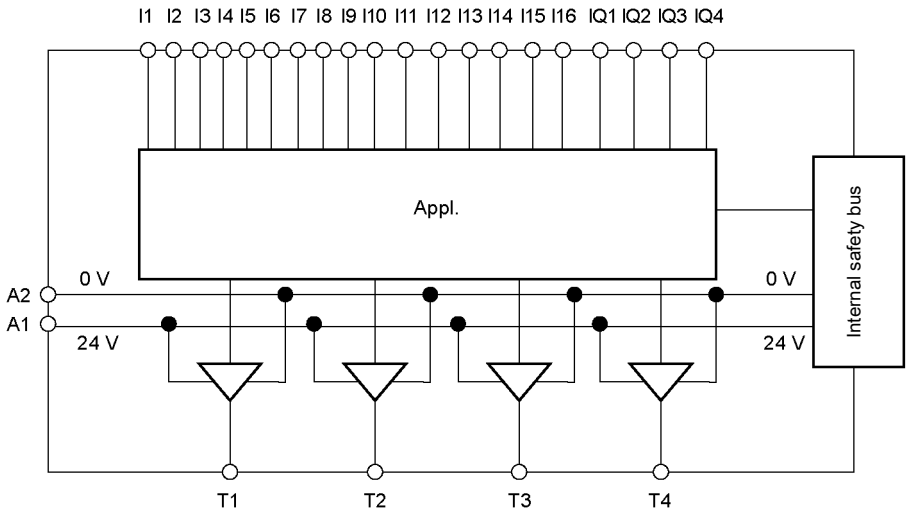

Fig. 3.7: Inputs and test pulses at an MSI 420 module

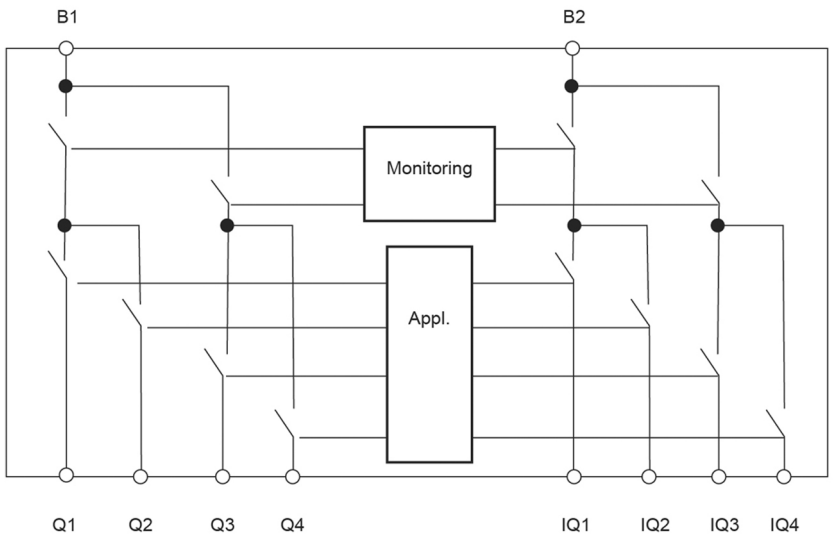

Fig. 3.8: Outputs at an MSI 420/430 module

3.5.4 Limited short-circuit detection in the input circuits

WARNING

- Short-circuits between the test signal outputs T1–T4 of a module MSI 4xx are detected as an error.
- Short-circuits between the test signal outputs of multiple modules MSI 4xx can only be detected when the test gaps of the test signal generators are < 41 ms and the test periods are ≥ 200 ms. Short-circuits to 24 V DC (after High) at inputs that are connected to test outputs are detected independently of the length of the test gaps.
  Take note of this during wiring, e.g. by using separate routing or protected lines!

3.5.5 Deactivating the test pulses at the outputs

It is possible to deactivate the test pulses at one or more output pairs. The outputs are combined into four output pairs with the MSI 420/430: Q1/Q2, Q3/Q4, IQ1/IQ2, and IQ3/IQ4. The test pulses each act upon the two outputs of an output pair.

WARNING

Switching off the test pulses at one of the two outputs of an output switches off the test pulses of the entire output pair!

Deactivating the test pulses at one or more safety outputs of a MSI 4xx module reduces the safety parameters of both safety outputs of the respective output pair of this module.

- Take this into account in the risk analysis and risk avoidance strategy of your application.
- You can find more detailed information on the safety parameters here: *Safety technology reference values [chapter 12.3]*

WARNING

Be sure to use protected or separate cabling!

- If you deactivate the test pulses at one or more safety outputs, short-circuits at other output circuits cannot be detected. This affects the safety function!
- In the event of a short-circuit after 24 V, it will no longer be possible to switch off the output.

WARNING

Carry out cyclic tests when the test pulses at one or more safety outputs are deactivated!

If you deactivated the test pulses on one or more safety outputs, carry out the following tests once a year:

- Switch off all the safety outputs without test pulses simultaneously for at least one second using the logic program of the controller module.
  OR
- Restart the MSI 400 system by switching off the power supply and switching it on again.

You will thus deactivate the test pulses at an output of a MSI 420/430 module:

- Connect an output element to the MSI 4xx module.
- Using the right mouse key, click on the output element and select the **Edit...**. command in the context menu.
- Deactivate the **Activation of test pulses of this output** option.
  The test pulses of this output will be switched off. A corresponding note will be displayed in the hardware configuration area under the respective MSI 4xx module.

3.5.6 Single-channel use of outputs

WARNING

Be sure to consider a potential brief switch to high with single-channel safety outputs!

In the event of an internal hardware error, single-channel safety outputs can switch to high once for 10 ms after the error has been detected.

- Consider this during your risk analysis and reduction strategy.
  Otherwise, there is a hazard for the operator of the machine.

3.6 Controller module MSI 430

3.6.1 Description

Controller module MSI 430 has the same functionality and has the same connections and the same displays as the MSI 420 controller module.

In addition, this module has the following gateway functionality on-board:

- Modbus/TCP interface
- PROFINET IO interface
- EtherNet/IP interface

3.6.2 Display elements, error codes, and terminal description

The displays of the MS and CV LEDs as well as the terminal assignment of the USB and Ethernet interface are identical to those of the MSI 420 controller module.

Further information: *Display elements, interfaces, and terminal description [chapter 3.5.2]*

3.7 Controller modules MSI 410.F50, MSI 420.F50 und MSI 430.F50

3.8 MSI-SD-CARD removable storage

3.8.1 Description

The system configuration of the entire MSI 400 system is stored in the MSI-SD-CARD program removable storage. This has the advantage that the MSI 400 system does not have to be reconfigured when modules are replaced.

The MSI-SD-CARD removable storage is an SD card that is produced and formatted specially for use in the controller modules.

Important information

NOTICE

- The data stored in the MSI-SD-CARD program removable storage will be retained even if the supply voltage is interrupted.
- When replacing a module, make sure that the program removable storage is inserted into the appropriate controller module. Mark all of the connection lines and plug connectors on the MSI 400 system clearly to prevent mixups.
- Commonly available SD cards cannot be used/inserted in MSI 400 and controller modules.
- The replacement of a verified user project can be recognized on the entry of the diagnostic number 24230000.

WARNING

- After the user project is transfered to the SD card and the user project has been replaced by replacing the SD card, the correct function of the safety application must be checked.
- Make sure that the SD card cannot be replaced by authorized personnel.

3.8.2 Files on the removable storage

The following table explains the significance of the files on the removable storage MSI-SD-CARD.

Tab. 3.10: Files on MSI-SD-CARD

File name	Function	Reading...	Writing...
config.yaml	Basic configuration of the communication (device name, TCP/IP configuration etc.)	… at device start. and … in MSI.designer in the configuration dialog of the controller (**Properties** docking window) if you click **Control configuration | Send**.	… with the basic data before the initial delivery. and … in MSI.designer in the configuration dialog of the controller (**Properties** docking window) if you click **Control configuration | Send**. and … when sending new data from a PLC via PROFINET IO or EtherNet/IP.
HISTORY.CSV	Non-volatile storage of diagnostics and error entries	… from MSI.designer for the **Diagnostics** view.	… for a new diagnostic or error event. and … in the **Diagnostics** view of MSI.designer click on the **Delete** button[2)].

File name	Function	Reading...	Writing...
PROJECT.XML	Project file, user program	… at device start. and … when establishing a connection with MSI.designer. and … before verifying a project.	… when sending a project e.g. from MSI.designer (independent of the selection in connection dialog) [3]. and … while verifying a project.
[1] Details in software manual, "Diagnostic view” section [2] Details in software manual, "Reference of commands and features” table [3] Details in software manual, "Connect with the safety controller” chapter			

The contents of the **config.yaml** file is changed by MSI.designer, from a PLC via PROFINET IO or EtherNet/IP or directly by the user by the use of an SD card reader. In which the data format **yaml** (Yet Another Markup Language) is to be retained.

The following table describes the function of selected elements.

Tab. 3.11: Significance of the content of the config.yaml file

Section	Function	Value range
ident:name:	Device name, station name	Character string without the '#', ':' characters
ethernet:dhcp:	DHCP client activation	yes no
ethernet:ip:	IPv4 address of the device	0.0.0.1 to 223.255.255.254 and not 127.0.0.1
ethernet:mask:	IPv4 network mask	255.0.0.0 to 255.255.255.253
ethernet:gw:	IPv4 gateway	0.0.0.0 or 0.0.0.1 to 223.255.255.254 and not 127.0.0.1
ethernet:multicast:	IPv4 Multicast membership for the device search by MSI.designer	224.0.0.0 0.0.0.0
usb:vcom:	USB interface activation	yes no

3.9 MSI-EM-IO84 input/output expansion module

3.9.1 Description

The MSI-EM-IO84 module is an input/output expansion with eight safe inputs and four safe outputs. It has two test signal generators: one for test output X1 and one for test output X2.

The MSI-EM-IO84 module offers the following functions:

- Monitoring of connected safety devices
  For further information: *Connecting devices [chapter 4]*
- Forwarding of input information to the controller module
- Receipt of control signals from the controller module and corresponding switching of outputs
- Fast shut-off: Direct switch-off of the actuators connected on the module. This results in a significant reduction in the response time of the entire system. Only 8 ms are needed in the response times of the devices at the inputs and outputs in order to switch-off the outputs. The runtimes on the internal safety bus and the Logic Execution Time do not play any role in this case.
  Further information: *System response times [chapter 12.1]*
- Activating or deactivating test pulses at the outputs (Q1–Q4) with firmware version V2.00.0 and higher.

The MSI-EM-IO84 module cannot be operated alone; it always requires an MSI 4xx controller module (see "MSI.designer" programming software).

It is possible to use multiple MSI-EM-IO84 modules simultaneously (see *System setup [chapter 3.2]*). The voltage of the internal logic and the test outputs is supplied via the system connector and the internal safety bus. The voltage of the Q1–Q4 outputs of the MSI-EM-IO84 must be supplied directly via A1/A2 at the respective module.

WARNING

Limited short-circuit detection in the input circuits

- One MSI-EM-IO84 module has two test signal generators, X1 and X2.
- Short-circuits between test signal generators of a MSI-EM-I8 or MSI-EM-IO84 module are detected. Between different modules the short circuit detection is then only ensured if the test gaps of the test signal generators are < 4 ms and the test periods ≥ 200 ms. Short-circuits past 24 V DC (after High) at inputs that are connected to test outputs are detected independently of the length of the test gaps.
  Take note of this during wiring (e.g. by using separate routing or protected lines)!

NOTICE

- The LEDs of inputs I1 to I8 indicate the state of the inputs at an update interval of about 64 ms.

3.9.2 Display elements and terminal assignment

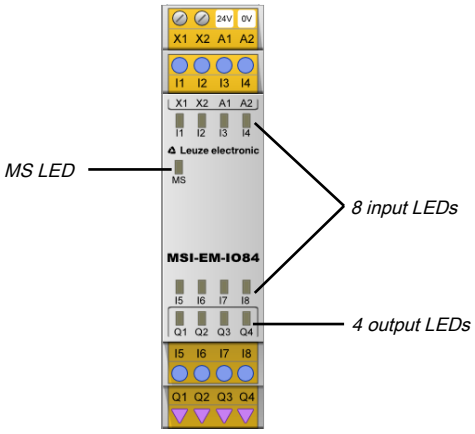

Fig. 3.9: Display elements of the MSI-EM-IO84 module

Flashing codes

Further information: *Device state and LED displays in the safe input/output modules [chapter 10.3.2]*

Terminal assignment

Tab. 3.12: MSI-EM-IO84 terminal assignment reference

Terminal	assignment
X1/X2	Test output 1 / test output 2
I1–I4	Inputs 1 to 4
A1	24 V
A2	GND
I5–I8	Inputs 5 to 8
Q1–Q4	Outputs 1 to 4

3.9.3 Internal circuits

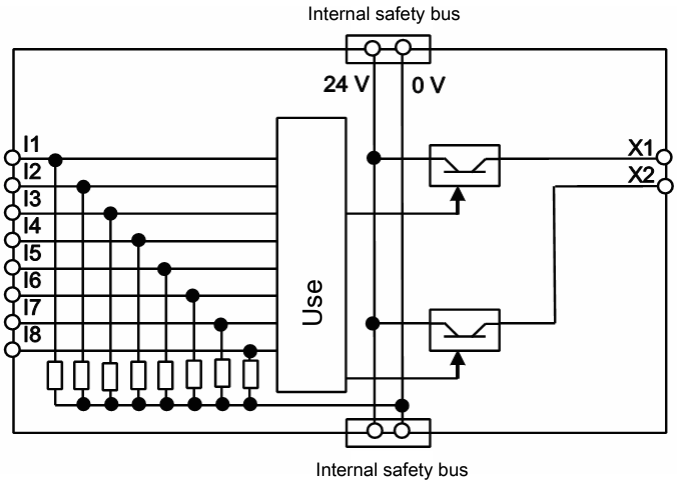

Fig. 3.10: Internal circuits of the MSI-EM-IO84 module: Safe inputs and test outputs

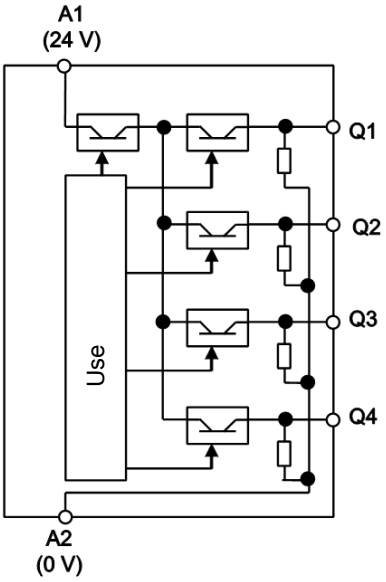

Fig. 3.11: Internal circuits of the MSI-EM-IO84 module: Safety outputs

3.9.4 Deactivating the test pulses at the outputs

With firmware version V2.00.0 and higher, it is possible to deactivate the test pulses at one or more outputs of MSI-EM-IO84 modules.

WARNING
Deactivating the test pulses at any output reduces the safety parameters of all outputs! Deactivation of the test pulses on one or more safety outputs of a module MSI-EM-IO84 reduces the safety parameters or all safety outputs Q1…Q4 of this module. ↳ Take this into account to ensure that your application corresponds to a reasonable risk analysis and avoidance strategy. ↳ You can find more detailed information on the safety parameters here: *Technical data [chapter 12]*

WARNING
Be sure to use protected or separate cabling! ↳ If you deactivate the test pulses at one or more safety outputs, short-circuits at other output circuits cannot be detected. This affects the safety function! ↳ In the event of a short-circuit after 24 V, it will no longer be possible to switch off the output. Furthermore, it will not be possible to prevent reverse current from going into a switched-off output, which will influence the capability of switching off the outputs.

WARNING
Carry out cyclic tests when the test pulses at one or more safety outputs are deactivated! If you deactivated the test pulses on one or more safety outputs, carry out the following tests once a year: ↳ Switch off all the safety outputs without test pulses simultaneously for at least one second using the logic program of the controller module. OR ↳ Restart the MSI 400 system by switching off the power supply and switching it on again.

You will thus deactivate the test pulses at an output of an MSI-EM-IO84 module:

↳ Connect an output element to the MSI-EM-IO84 module.

↳ Using the right mouse button, click on the output element and select the **Edit...** command in the context menu.

↳ Deactivate the **Activation of test pulses of this output** option.
The test pulses of this output will be switched off. A corresponding note will be displayed in the hardware configuration area under the respective MSI-EM-IO84 module.

3.9.5 Single-channel use of outputs

WARNING
Be sure to consider a potential brief switch to high with single-channel safety outputs! In the event of an internal hardware error, single-channel safety outputs (Q1 to Q4) can switch to high once for 10 ms after the error has been detected. Consider this during your risk analysis and reduction strategy. Otherwise, there is a hazard for the operator of the machine.

3.10 MSI-EM-I8 input expansion module

3.10.1 Description

The MSI-EM-I8 module is an input expansion with eight safe inputs. If fulfills the following tasks:

- Monitoring of connected sensors
  For further information: *Connecting devices [chapter 4]*
- Forwarding of input information to the controller module

The MSI-EM-I8 module cannot be operated alone and always requires an MSI 4xx controller module (see "MSI.designer" programming software).

It is possible to use multiple MSI-EM-I8 modules simultaneously (see *System setup [chapter 3.2]*). The voltage of the internal logic and the test outputs is supplied via the program removable storage device and the internal safety bus.

	WARNING
	Limited short-circuit detection in the input circuits ↳ One MSI-EM-I8 has two test signal generators. One test signal generator is responsible for the odd-numbered test outputs (X1, X3, X5, and X7), while the other is responsible for the even-numbered test outputs (X2, X4, X6, and X8). ↳ Short-circuits between test signal generators of a MSI-EM-I8 or MSI-EM-IO84 module are detected. Between different modules the short circuit detection is then only ensured if the test gaps of the test signal generators are < 4 ms and the test periods ≥ 200 ms. Short-circuits past 24 V DC (after High) at inputs that are connected to test outputs are detected independently of the length of the test gaps. ↳ Please ensure that the odd-numbered test outputs (X1, X3, X5, and X7) at the MSI-EM-I8 are connected to a common test signal generator and that the even-numbered test outputs (X2, X4, X6, and X8) are connected to another common test signal generator. Therefore, short-circuits between the odd-numbered test outputs (X1, X3, X5, and X7) cannot be detected. The same applies accordingly to the even-numbered test outputs X2, X4, X6, and X8. **Make note of this during wiring (e.g. through separate routing or protected lines)!**

3.10.2 Display elements and terminal assignment

NOTICE

The LEDs of inputs I1 to I8 indicate the state of the inputs at an update rate of about 64 ms.

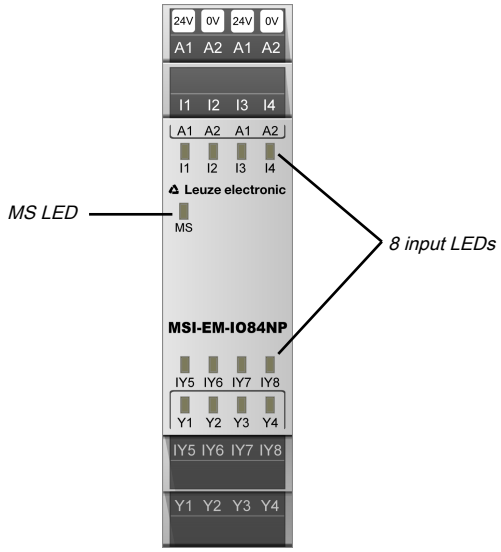

Fig. 3.12: Display elements on the MSI-EM-I8 module

Flashing codes

Further information: *Device state and LED displays in the safe input/output modules [chapter 10.3.2]*

Terminal assignment

Tab. 3.13: Terminal assignment reference of the MSI-EM-I8 module

Terminal	assignment
X1/X3	Test signal 1
X2/X4	Test signal 2
I1 – I4	Inputs 1 to 4
I5 – I8	Inputs 5 to 8
X5/X7	Test signal 1
X6/X8	Test signal 2

3.10.3 Internal circuits

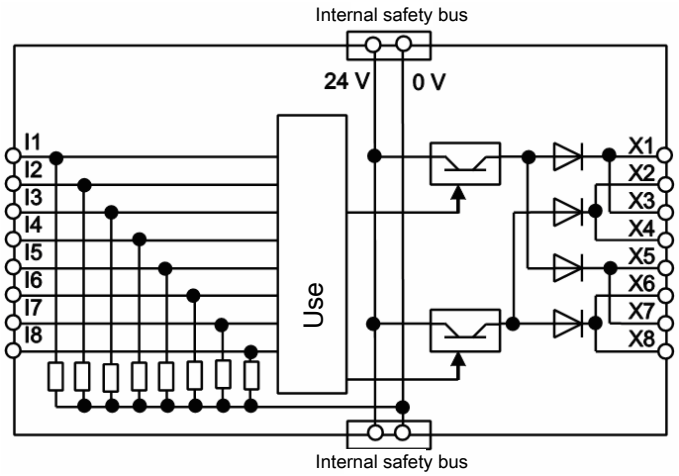

Fig. 3.13: Internal circuits of the MSI-EM-I8 module: Safety inputs and test outputs

3.11 MSI-EM-IO84NP input/output expansion module

3.11.1 Description

The MSI-EM-IO84NP module is an input/output expansion with 4 non-secure inputs, 4 non-secure outputs and 4 non-secure input/output combinations whose function is configured using the MSI.designer software.

The MSI-EM-IO84NP module offers the following functions:

- Monitoring of connected devices and sensors
  For further information: *Connecting devices [chapter 4]*
- Forwarding of input information to the controller module
- Receipt of control signals from the controller module and corresponding switching of outputs

The MSI-EM-IO84NP module cannot be operated alone; it always requires an MSI 4xx controller module (see "MSI.designer" programming software).

It is possible to use multiple MSI-EM-IO84NP modules simultaneously (see *System setup [chapter 3.2]*). The voltage of the internal logic is supplied via the system connector and the internal safety bus. The voltage of the Y1–Y4 and IY5–IY8 outputs of the MSI-EM-IO84NP must be supplied directly via A1/A2 at the respective module.

Refresh rate

The LEDs of the I1–I4 inputs and the Y1–Y4 outputs or the inputs/outputs IY5-IY8 combination show the state with a refresh rate of approx. 4 ms.

Restricted selection of inputs

Only the single-channel inputs are available to be selected in the configuration for the MSI-EM-IO84NP expansion module, for example:

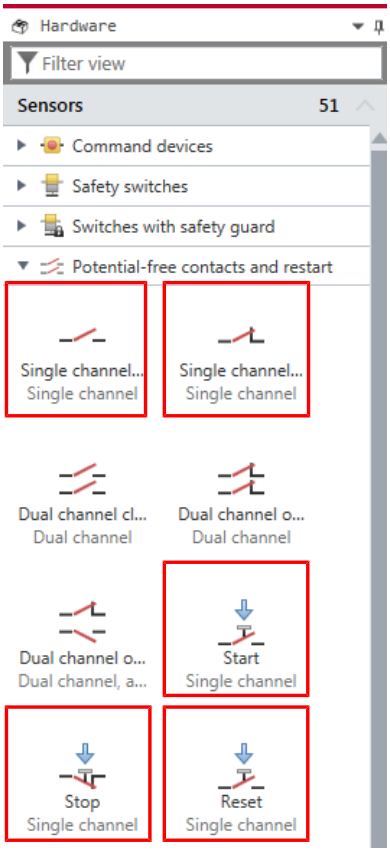

Fig. 3.14: single-channel inputs for the MSI-EM-IO84NP expansion module

3.11.2 Display elements and terminal assignment

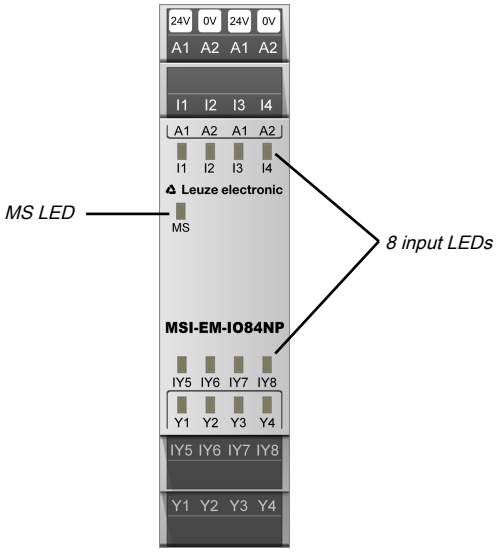

Fig. 3.15: Display elements of the MSI-EM-IO84NP module

Flashing codes

Further information: *Device state and LED displays in the standard input/output modules [chapter 10.3.3]*

Terminal assignment

Tab. 3.14: MSI-EM-IO84NP terminal assignment reference

Terminal	assignment
A1	24 V
A2	GND
I1–I4	non-secure inputs 1 to 4
IY5–IY8	non-secure inputs/outputs combination 5 to 8
Y1–Y4	non-secure outputs 1 to 4

3.11.3 Internal circuits

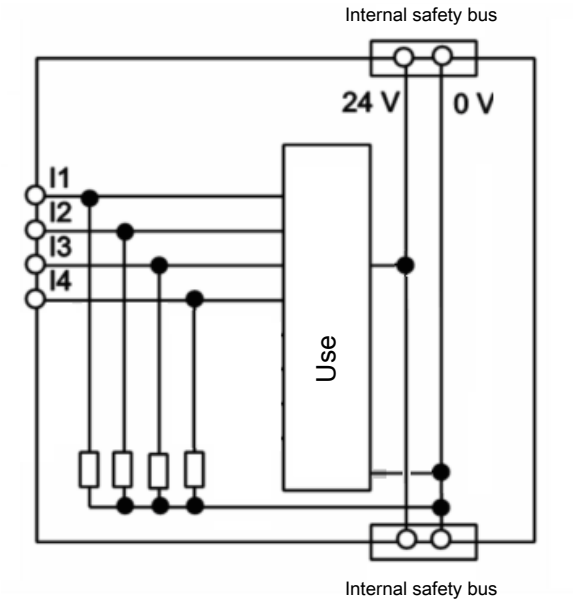

Fig. 3.16: Internal switching circuit of the MSI-EM-IO84NP module: non-secure inputs

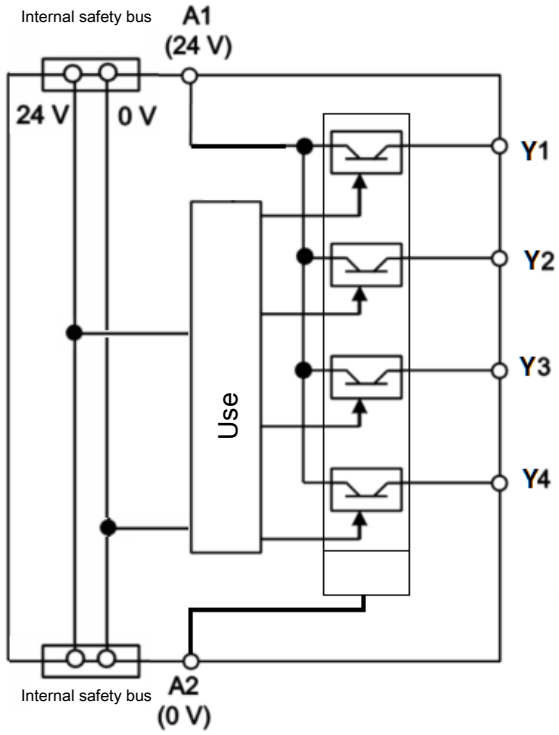

Fig. 3.17: Internal switching circuit of the MSI-EM-IO84NP module: non-secure outputs

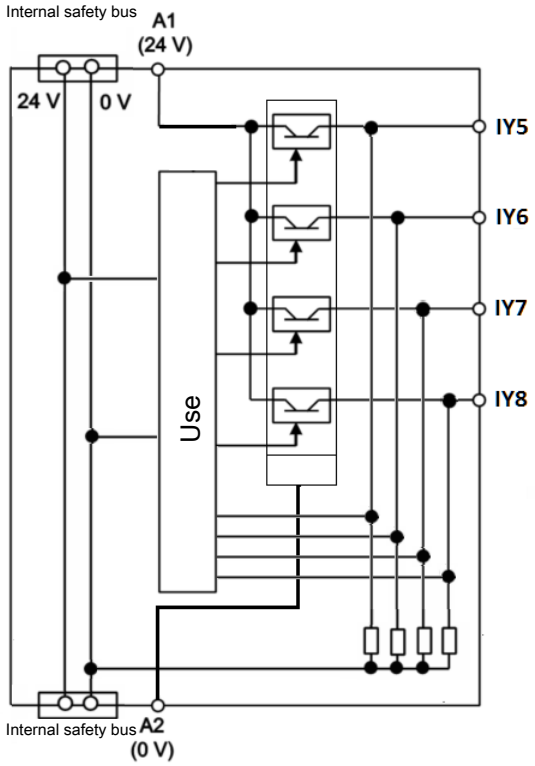

Fig. 3.18: Internal switching circuit of the MSI-EM-IO84NP module: non-secure inputs/outputs combination

WARNING	
	Use of the IY5–IY8 inputs/outputs When using the combination connections as input, the signal input voltage to IY5–IY8 may never be greater than the supply voltage to A1/A2.

4 Connecting devices

This section describes the connection of safety sensors and actuators to the MSI 400 system and provides setup information for selected functions.

The MSI 400 system supports applications up to Performance Level PL e (as per EN ISO 13849-1) and up to Safety Integrity Level SIL CL3 (as per EN 62061).

The level of safety actually achieved depends on the external wiring, the implementation of the wiring, the parameterization, the selection of the safety sensors, and their arrangement on the machine. To this end, consider all of the required boundary conditions and evaluate them, for example, in a Failure Modes and Effects Analysis (FMEA).

You can find additional information to be noted during the electrical installation here: *Electrical installation [chapter 7]*

Important notes

WARNING

Loss of safety function due to incorrect configuration!

Carefully plan and implement configuration!

The configuration of the safety application must be precisely adapted to the circumstances of the system or machine to be monitored.

- Check to ensure that the configured safety application monitors the machine or system as you have planned and whether the safety of a configured application is being ensured at all times. This must be ensured in all operating modes and for all sub-applications. Document the results of this test!
- Be sure to note the instructions for commissioning and daily testing in the operating instructions for the safety equipment integrated into the safety application.
- Note the warning information and function descriptions for the safety equipment connected to the safety control. When in doubt, contact the respective manufacturer of the safety equipment.
- Note that the minimum switch-off time of the connected sensors must be greater than the Execution Time of the logic (see software handbook, Time values and logic execution time). In this way, you will ensure that the MSI 400 system can detect the switching of sensors. The minimum switch-off time of sensors is typically listed in the technical data for the sensors.

WARNING

Protect single-channel inputs against short-circuits and cross-connections!

When a short-circuit to high occurs at a single-channel input with test pulses that were previously low, this signal can then look like a pulse for the logic. A short-circuit to high means that the signal is first to high and then is back to low after the error detection time. A pulse can be generated due to the error detection.

Because of this, note the following specifications for single-channel signals with test pulses:

- If the short-circuit to high occurs at a single-channel input with test pulses that was previously high, this signal for the logic then looks like a delayed falling edge (transition from high to low).
- If a single channel input is used and an unexpected pulse or delayed falling flank (High to Low) could lead to a risky situation at this input, then you must take the following measures:
  - Protected cabling for the signal in question (in order to prevent cross-connections with other signals)
  - No cross-connection detection, i.e. no connection to a test output.
    This must be noted in particular for the following inputs:
  - Input reset at the function block reset
  - Input restart at the function block restart
  - Restart input at the function blocks for press applications (contact monitor, excenter, universal press contact monitor, cycle operation, press setup, single stroke monitoring, press automatic)
  - Override input at a function block for muting

- Reset input at a function block for valve monitoring
- Reset inputs to zero and set to start value on a counter function block

NOTICE

- When using an odd-numbered test output, odd-numbered inputs must be used, while even-numbered inputs must be used when using an even-numbered test output.
- You have to use the test outputs of the same module at which the device to be tested has been connected.

Report function in the software

After project planning, you will receive a report in the MSI.designer software with the following content (Activate: Tab bar | View **Report**):

- Logic report
- List of parts
- Wiring information

Tab. 4.1: Excerpt from exemplary documentation in the MSI.designer software

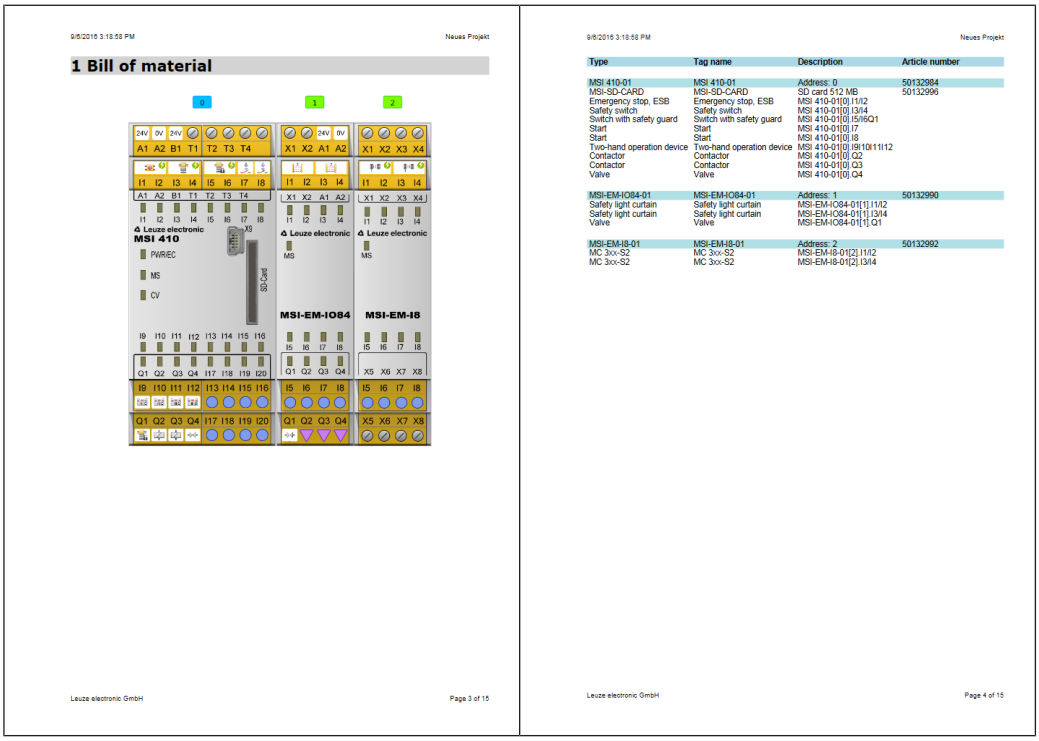

9/6/2016 3:18:58 PM Neues Projekt

1 Bill of material

Leuze electronic GmbH Page 3 of 15

9/6/2016 3:18:58 PM Neues Projekt

Type	Tag name	Description	Article number
MSI 410-01	MSI 410-01	Address: 0	50132984
MSI-SD-CARD	MSI-SD-CARD	SD card 512 MB	50132996
Emergency stop, ESB	Emergency stop, ESB	MSI 410-01[0].I1/I2	
Safety switch	Safety switch	MSI 410-01[0].I3/I4	
Switch with safety guard	Switch with safety guard	MSI 410-01[0].I5/I6Q1	
Start	Start	MSI 410-01[0].I7	
Start	Start	MSI 410-01[0].I8	
Two-hand operation device	Two-hand operation device	MSI 410-01[0].I9I10I11I12	
Contactor	Contactor	MSI 410-01[0].Q2	
Contactor	Contactor	MSI 410-01[0].Q3	
Valve	Valve	MSI 410-01[0].Q4	
MSI-EM-IO84-01	MSI-EM-IO84-01	Address: 1	50132990
Safety light curtain	Safety light curtain	MSI-EM-IO84-01[1].I1/I2	
Safety light curtain	Safety light curtain	MSI-EM-IO84-01[1].I3/I4	
Valve	Valve	MSI-EM-IO84-01[1].Q1	
MSI-EM-I8-01	MSI-EM-I8-01	Address: 2	50132992
MC 3xx-S2	MC 3xx-S2	MSI-EM-I8-01[2].I1/I2	
MC 3xx-S2	MC 3xx-S2	MSI-EM-I8-01[2].I3/I4	

Leuze electronic GmbH Page 4 of 15

4.1 Safety command devices and electromechanical safety switches

4.1.1 Emergency stop button

Tab. 4.2: Connection of safety command devices

Electrical connection: Example from MSI.designer		
Single-channel, without testing	24V 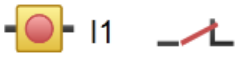 I1	Contact between 24 V and I1
Single-channel, with testing	T2 I2	Contact between T2 and I2
Two-channel, without testing	24V 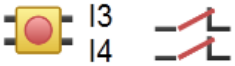 I3 I4	Channel 1: Contact between 24 V and I3 Channel 2: Contact between 24 V and I4
Two-channel, with testing	T1 T2 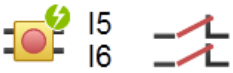 I5 I6	Channel 1: Contact between T1 and I5 Channel 2: Contact between T2 and I6

The pre-configured two-channel emergency stop buttons in MSI.designer have equivalent switching contacts. In order to implement two-channel complementary switching contacts, you can find corresponding elements in the element window under the group of potential-free contacts.

Tab. 4.3: Functions

Function	Info
Testing	Possible
Series connection/ cascading	Max. number of emergency stop buttons switched in series: note max. line resistance of 100 Ω
Synchronous time	4 ms to 30 ms or deactivated

NOTICE	
	You can find additional information in the operating instructions for the ESB200 emergency stop button.

4.1.2 Electromechanical safety switch without lock

Tab. 4.4: Electromechanical safety switch connection

Electrical connection: Example from MSI.designer		
Single-channel, without testing	24V I1	Contact between Ub and I1
Single-channel, with testing	T2 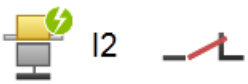 I2	Contact between T2 and I2
Two-channel, without testing	24V 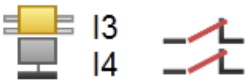 I3 I4	Channel 1: Contact between Ub and I3 Channel 2: Contact between Ub and I4

Electrical connection: Example from MSI.designer		
Two-channel, with testing	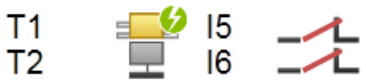	Channel 1: Contact between T1 and I5 Channel 2: Contact between T2 and I6

4.1.3 Electromechanical safety switch with lock

Tab. 4.5: Connection of locks

Electrical connection: Example from MSI.designer		
Single-channel, without testing	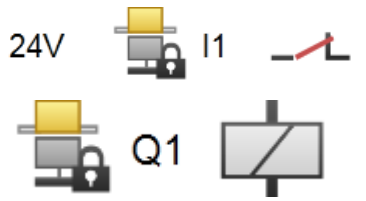	Contact between Ub and I1 Inductor at Q1
Single-channel, with testing	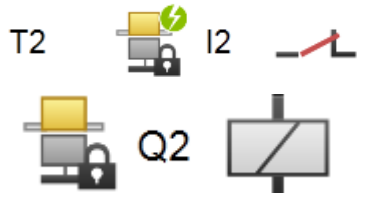	Contact between T2 and I2 Inductor at Q2
Two-channel, without testing	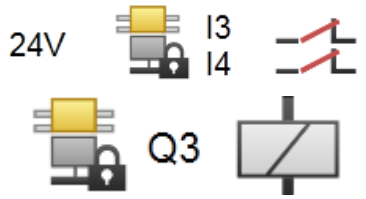	Channel 1: Contact between Ub and I3 Channel 2: Contact between Ub and I4 Inductor at Q3
Two-channel, with testing	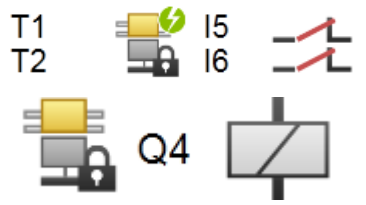	Channel 1: Contact between T1 and I1 Channel 2: Contact between T2 and I2 Inductor at Q1

Tab. 4.6: Functions with electromechanical safety switches and locks

Function	Info
Testing	Possible
Series connection/ cascading	The max. number of emergency stop buttons switched in series is determined by the max. line resistance of 100 Ω.
Synchronous time	4 ms to 30 ms or deactivated

	NOTICE
	You can find additional information in the operating instructions for the electromechanical safety switches.

4.1.4 Enable switch

Tab. 4.7: Enable switch connection

Electrical connection: Example from MSI.designer		
2 positions, without testing	24V I1 I2	NC 1: between Ub and I1 NC 2: between Ub and I2
2 positions, with testing	T1 T2 I3 I4	NC 1: between T1 and I3 NC 2: between T2 and I4
3 positions, without testing	24V I1 I2 24V I3 I4	NC 1: between Ub and I1 NC 2: between Ub and I2 NO 1: between Ub and I3 NO 2: between Ub and I4
3 positions, with testing	24V I5 I6 T1 T2 I7 I8	NC 1: between Ub and I5 NC 2: between Ub and I6 NO 1: between T1 and I7 NO 2: between T2 and I8

Tab. 4.8: Functions

Function	Info
Testing	Possible
Series connection	Not possible
Synchronous time	4 ms to 30 ms or deactivated

NOTICE	
	You can find additional information in the operating instructions for the respective devices.

4.1.5 Two-hand control

Tab. 4.9: Two-hand control connection

Electrical connection: Example from MSI.designer		
Type IIIA, without testing	24V III A I1 24V III A I2	Channel 1: Contact between 24 V and I1 Channel 2: Contact between 24 V and I2
Type IIIC, without testing	24V III C I5 24V III C I6 24V III C I7 24V III C I8	NO (normally open contact) between 24 V and I6 (I8) NC (normally closed contact) between 24 V and I5 (I7)

4.1.5.1 Type IIIA

With type IIIA, two equivalent inputs (make NC contacts for both two-hand buttons) are monitored.

A valid input signal is only generated when the ON state (H level) is present at both inputs within a time of 0.5 seconds (synchronous change, both two-hand buttons actuated) and both were previously in the OFF state (L level).

4.1.5.2 Type IIIC

With type IIIC, two pairs of equivalent inputs (NC (normally closed contact)/NO (normally open contact) contact pairs for both two-hand buttons) are monitored.

A valid input signal is only generated when the ON state (H/L level) is present at both inputs within a time of 0.5 seconds (synchronous change, both two-hand buttons actuated) and both were previously in the OFF state (L/H level).

	NOTICE
	You can find additional information in the operating instructions for two-hand control.

4.1.6 Safety mats and bumper

Tab. 4.10: Safety mats connection

Electrical connection: Example from MSI.designer		
Short-circuit-forming safety mat in 4-conductor technology, at test output	T1 T2 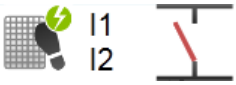 I1 I2	Channel 1: Contact between T1 and I1 Channel 2: Contact between T2 and I2
Short-circuit-forming multi-safety mat in 4-conductor technology, at test output	T1 T2 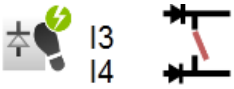 I3 I4	Channel 1: Contact between T1 and I1 Channel 2: Contact between T2 and I2

Tab. 4.11: Function of safety mats

Function	Info
Parallel connection	Possible
Series connection	Possible

Switch-off conditions

	WARNING
	Make sure that the switch-off condition is sufficient! The actuation period for safety mats and bumper must be at least twice as high as the maximum value for the "test period" of both test outputs used in order to ensure that the switch-off condition will be detected and that a sequencing error will not occur.

	NOTICE
	You can find additional information in the operating instructions for the safety mats.

Test periods and response times

WARNING

Changed reaction times!

From build state D-03.01 of the MSI 4xx modules and B-08 of the MSI-EM-IO84 modules, the longer response times given in the table below apply.

In particular, for existing projects with sensor elements for safety mats and bumpers, this extension of the response times must be adhered to (e.g. in the case of replacement of a MSI 4xx module).

Tab. 4.12: Test periods and response times

Test periods for both test outputs (ms)[1]		Resulting additional response time (ms)	
Test output 1	**Test output 2**	**MSI-EM-IO84 (to B-07)** **MSI 4xx (to D-01.xx)**	**MSI-EM-IO84 (from B-08)** **MSI 4xx (from D-03.xx)**
40	40	20	40
40	200-1000	40	80
200	200	100	200
200	400-1000	200	400
400	400	300	400
400	600 800-1000	400 400	600 800
600	600	500	600
600	800 1000	600	800 1000
800	800	700	800
800	1000	800	1000
1000	1000	900	1000

[1] Obtain the values from the report in MSI.designer.

4.1.7 Connection of multiple safety mats/bumpers

When multiple safety mats/bumpers are used to improve diagnosis, it may be wise to decouple the test pulse outputs.

4.1.8 Mode selection switch

Electrical connection: Example from MSI.designer		
Operating mode selection switch (1 from 2) to 24 V	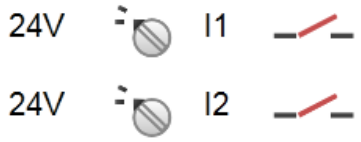	Channel 1: Contact between 24 V and I1 Channel 2: Contact between 24 V and I2
Operating mode selection switch (1 from 2) to test output	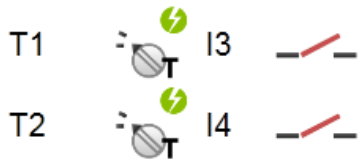	Channel 1: Contact between T1 and I3 Channel 2: Contact between T2 and I4

Function	Info
Testing	Possible

NOTICE

- Operating mode selection switches without test pulses enable 2 to 8 operating modes; operating mode selection switches with test pulses enable 2 to 4 operating modes.
- When wiring the tested operating mode selection switches, note that when using an odd-numbered test output (e.g. T1, T3 ... or X1, X3 ...), odd-numbered inputs (e.g. I1, I3, I5 ...) must be used; when using an even-numbered test output (e.g. T2, T4 ... or X2, X4 ...), even-numbered inputs (e.g. I2, I4, I6 ...) must also be used.
- You can find additional information in the operating instructions for the operating mode selection switches.

4.1.9 Potential-free contacts

The MSI.designer software provides a series of potential-free contacts for "free" designing of contact elements. In this manner, you can implement different NO (normally open contact)/NC (normally closed contact) combinations with and without testing. In addition, there are elements for a start and stop button, reset button, and device monitoring (EDM).

Tab. 4.13: Function of potential-free contacts

Function	Info
Testing	Possible
Series connection	Possible
Discrepancy time	Further information: Software manual

4.2 Contactless safety sensors

4.2.1 Magnetic safety switches

4.2.1.1 Magnetic safety switches with equivalent inputs

Tab. 4.14: Connection of magnetic safety switches with equivalent inputs

Electrical connection: Example from MSI.designer		
With testing	T1 T2 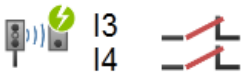 I3 I4	Channel 1: Contact between T1 and I3 Channel 2: Contact between T2 and I4

4.2.1.2 Magnetic safety switches with complementary inputs

Tab. 4.15: Connection of magnetic safety switches with antivalent inputs

Electrical connection: Example from MSI.designer		
With testing	T1 T2 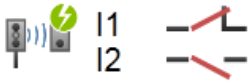 I1 I2	NO contact between T1 and I1 NC contact between T2 and I2

Tab. 4.16: Functions with magnetic safety switches

Function	Info
Testing	Possible
Series connection/ cascading	Possible, note max. line resistance of 100 Ω and correct setting of test pulse time
Synchronous time	Preset at 1500 ms

	NOTICE
	You can find additional information in the operating instructions for the magnetic safety switches.

4.2.2 Inductive safety switches

Tab. 4.17: Inductive safety switch connection

Electrical connection: Example from MSI.designer		
Inductive switch (serial)	T1 I5	Test input TE at T1 Output A at I5
Inductive switch	24V I7 I8	OSSD1 on I7 OSSD2 on I8

Tab. 4.18: Functions with inductive safety switches

Function	Info
Testing	Necessary with serial inductive switches
Series connection/ cascading	**Inductive switches (serial):** Up to six sensors per input. Maximum OFF-ON delay of the cascade is 10 ms (otherwise, the test gap will lead to switch-off). Note the maximum line resistance of 100 Ω and the correct setting of the test pulse time. **Inductive switch:** No cascading possible

NOTICE	
	You can find additional information in the operating instructions for the inductive safety switches.

4.2.3 Transponder switches

Tab. 4.19: Transponder connection

Electrical connection: Example from MSI.designer		
With OSSD	24V I1 I2	OSSD1 at I1 OSSD2 at I2

Tab. 4.20: Functions with transponders

Function	Info
Series connection/ cascading	Possible, depending on type used

NOTICE	
	You can find additional information in the operating instructions for the respective transponder switch.

4.3 Testable single-beam safety light barriers

4.3.1 Testable type 2 single-beam safety light barriers

Tab. 4.21: Connecting testable type 2 single-beam safety light barriers

Electrical connection: Example from MSI.designer		
Testable type 2 single-beam safety light barriers	T1 I3	Test input TE (transmitter) at T1 Output Q (receiver) at I3

WARNING	
	Note the safety information and protective measures! Route the transmitter and receiver lines outside of the switchbox so that a short-circuit between these lines can be avoided, e.g. route them separately in separate sheathed cables or protected areas.

Tab. 4.22: Functions with testable type 2 single-beam safety light barriers

Function	Info
Testing	Possible
Series connection/ cascading	Possible, depending on the safety light barrier type used Note the correct setting of the test pulse time: Maximum OFF-ON delay of the cascade is 10 ms (otherwise, the test gap will lead to switch-off). Note the maximum line resistance of 100 Ω.

NOTICE	
	You can find additional information in the operating instructions for the type 2 single-beam safety light barriers.

4.3.2 Testable type 4 single-beam safety light barriers

Electrical connection: Example from MSI.designer		
Testable type 4 single-beam safety light barriers	T2 I4	Test input TE (transmitter) at T2 Output Q (receiver) at I4

WARNING	
	Route the transmitter and receiver lines outside of the switchbox so that a short-circuit between these lines can be avoided, e.g. route them separately in separate sheathed cables or protected areas.

Tab. 4.23: Functions with testable type 4 single-beam safety light barriers

Function	Info
Testing	Required
Series connection/ cascading	Maximum of seven pairs per inputs Note the maximum line resistance of 100 Ω.

NOTICE

You can find additional information in the operating instructions for the type 4 single-beam safety light barriers.

4.3.3 Customer-specific testable single-beam safety light barriers

You can find additional information on creating customer-specific elements in the software manual.

NOTICE

- Select the minimum value for the desired test gap in the settings of the customer-specific element dialog.
- Regardless of the test gap, the entire OFF-ON delay of the cascade must be less than the maximum OFF-ON delay of the respective test output (see *System response times [chapter 12.1]*) -2 ms. Otherwise, the test gap will cause a switch-off. For safe input/output modules, this value = 12 ms - 2 ms = 10 ms.
- Use a shielded or separate cable for the connections from the test output of the module (X1 to X8) to the test input of the transmitter and from the output of the receiver to the safe input of the module (I1 to I8). Otherwise, a short-circuit between the signals may prevent error detection by this test.

4.3.4 Information on installing testable single-beam safety light barriers

NOTICE

Note the installation information in the operating instructions for the respective sensors and particularly the following points:

- Single-beam safety light barriers may only be used as access protection in accordance with EN ISO 13855. They may not be used as finger or hand protection.
- Maintain the minimum distance to reflective surfaces.
- The safety distance between the light beam and the danger point for the access protection must absolutely be adhered to.

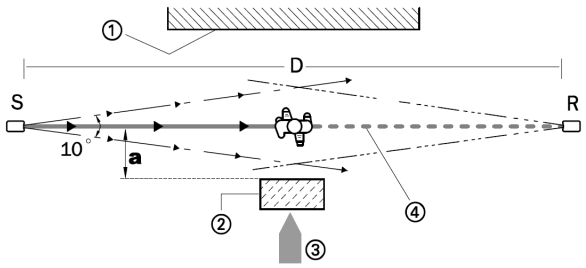

Fig. 4.1: Minimum distance "a" to reflective surfaces, correct installation, and alignment

S = transmitter R = receiver D = distance between transmitter and receiver

1 = border to the hazardous area

2 = reflective surface

3 = entry direction to the hazardous area

4 = optical axis

a = minimum distance to reflective surface

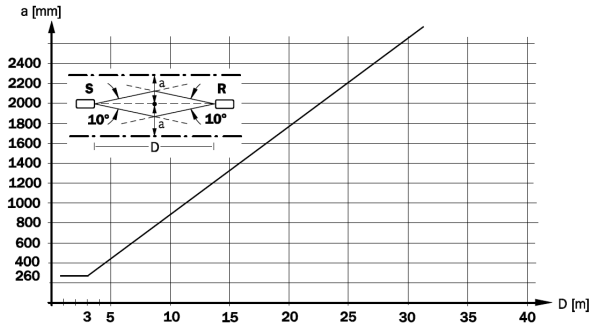

Fig. 4.2: Minimum distance "a" as a function of distance "D" for testable single-beam safety light barriers with 10° aperture angle

NOTICE

Diagrams of the safety light barriers can be found in the respective operating instructions.

NOTICE

Avoid interaction between single-beam safety light barriers and between cascades

- If multiple single-beam safety light barrier pairs are used, the aperture angle of the sensors must absolutely be noted in order to prevent interaction.
- If the transmitter is only installed on one side, the light beams must not overlap on the receiver side so that the light beam of the transmitter reaches two receivers.
- With reciprocal installation of the transmitter and receiver, ensure that the light beam of transmitter S1 cannot be received by receiver R3 and that the light beam of transmitter S3 cannot be received by receiver R1.

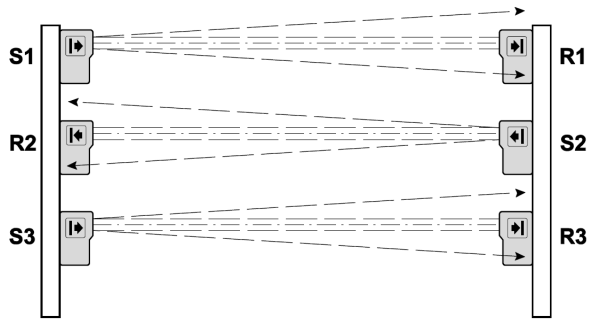

Fig. 4.3: Installation so as to prevent optical interaction

4.4 ESPE – Electro-sensitive protective equipment

Tab. 4.24: BWS connection

Electrical connection: Example from MSI.designer		
Type 2 safety light curtain	24V 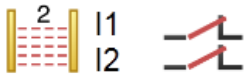	OSSD1 (receiver) at I1 OSSD2 (receiver) at I2
Type 2 multiple light beam safety, Type 4 multiple light beam safety	24V 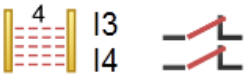	OSSD1 (receiver) at I3 OSSD2 (receiver) at I4
Laser scanner BWS type 3	24V 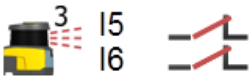	OSSD1 (receiver) at I5 OSSD2 (receiver) at I6

NOTICE

You can find additional information in the operating instructions for the respective BWS.

4.5 Motion monitoring

Tab. 4.25: Connecting sensor elements for motion monitoring

Electrical connection: Example from MSI.designer		
HTL proximity sensor single-channel		Track A
HTL proximity sensor dual-channel		Tracks: A and A/
HTL proximity sensor dual-channel or HTL encoder dual-channel	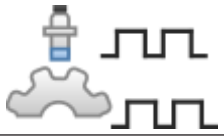	Tracks A and B
HTL encoder 4-channel	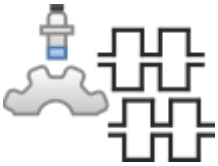	Tracks A, A/ and B, B/

Important notes

WARNING

Observe the screening specifications

- Use screened lines for connecting the sensor elements.
- Earth the shielding on both sides, i.e. on the sensor and on the module.
- Position the screen earthing terminal as close to the module as possible and keep the stripped ends for connection to the module as short as possible.

	NOTICE
	Recommendation for sensors and line lengths The maximum line length between sensor and module is dependent, to a large extent, on the output type of the sensor. To achieve a good and as fault-free transmission as possible, we recommend, besides a cable earthed and shielded on both sides, using sensors with push-pull outputs. ↳ Sensor with High-side output: max. 15 m ↳ Sensor with Push-pull output: max. 50 m

4.5.1 Sensors and hardware

4.5.1.1 Basic information on proximity sensors and toothed discs

Rotational and linear movements can be detected using proximity sensors and toothed discs or racks.

The number of teeth determines the resolution, e.g. 9 teeth per revolution. The ratio between the tooth and gap and the switching behavior of the sensor determine the pulse-pause ratio of the sensor signal. The width of a tooth should correspond at least to the diameter of the sensor detection range. See the datasheets of the relevant sensor manufacturer for the mechanical construction.	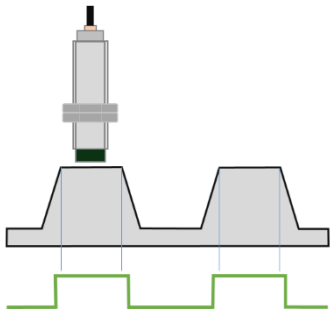
Calculation of the input signal frequency • X = number of impulses per revolution • X = number of teeth on the disc for NO • X = number of gaps on the disc for NC • N = speed of shaft in rpm • N / 60 = revolutions per second • F: Frequency	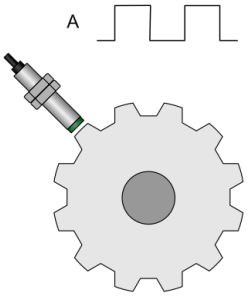 **F = X * N / 60** Example • Speed = 300 rpm • Number of teeth = 9 • F= 300/60*9 = **45 Hz**

4.5.1.2 Sensor requirements

Sensors vary in relation to the

- number of signal lines;
- behavior in an active state, e.g. NC or NO;
- electrotechnical properties and internal switching of outputs, e.g. open collector or push-pull.

Note: The physical sensor measuring procedure (e.g. capacitive or inductive proximity switch or light sensor) is not essential for detecting signals or performing evaluations with MSI 400.

4.5.1.2.1 Number of signal lines

In the case of sensors for motion monitoring, a distinction is made between 4, 2 and 1-track e coders.

Signal line A	Periodical square wave signal whose period duration is proportional to the rotational speed (rotary encoders) or linear movement (linear encoders).
Signal line B	A signal phase-shifted by 90°, for example, in relation to signal A with the same properties as signal A.
Signal line A/	A signal phase-shifted by 180° in relation to signal A. Also known as inverted signal A.
Signal line B/	A signal phase-shifted by 180° in relation to signal A. Also known as inverted signal B.

Pulse-pause ratio

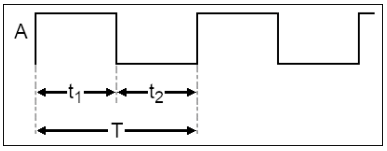

Fig. 4.4: Pulse-pause ratio

The ideal pulse-pause ratio for the sensor signal is 1:1. Additionally the following minimal values have to be taken into account:

Period duration T	10 µs
HIGH impulse t_1	5 µs
LOW impulse t_2	5 µs

If the pulse-pause ratio is not 1:1, the permitted limit frequency decreases. HIGH and LOW impulses must both be present for a minimum of 5 µs.

Antivalent signals

	NOTICE
	In the case of sensors with antivalent signals (A and A/), the shift between these two signals at the input terminals must not exceed 150 µs across the entire frequency range. Otherwise a discrepancy fault is detected.

The following graphic shows an example of a trailing signal A/. A signal to A / lagging signal A is also permitted in the scope of the specified time difference.

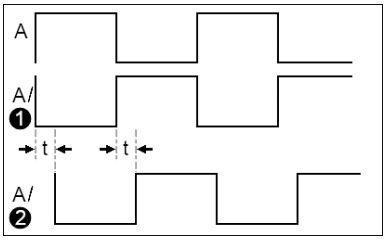

Fig. 4.5: Phase shift between antivalent signals

A and A/ [1]	Ideal status: A and A/ as antivalent signals without the edges shifting
A and A/ [2]	Phase shift t between the signals If t>150 µs, then discrepancy fault

Phase shift

Direction detection is possible on sensors with 2 phase-shifted signal lines (e.g. A and B). A phase shift of 90° between the two signals is ideal.

Incremental encoders usually operate with a phase shift of 90°. In the case of proximity sensors on toothed discs, for example, the mounting position of the two sensors relative to the toothed disc determines the phase shift.

The following limits apply for the phase shift between signals A and B:

Frequency of input signals	Minimum chronological interval of edges t_1 and t_2 See: following diagram
up to 400 Hz	$t_1 > 200$ µs and $t_2 > 200$ µs
from 400 Hz	$t_1 > 5$ µs and $t_2 > 5$ µs

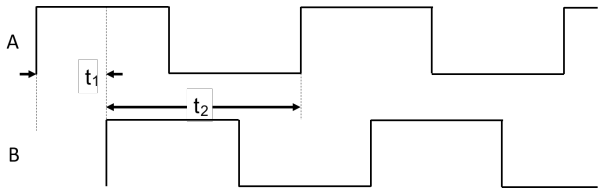

Fig. 4.6: Minimum chronological interval of edges t_1 and t_2

Note: Inductive and capacitive effects on the supply lines may distort signal sequences at the signal edges, which changes the phase shift between the A and B signals as a result. The limits specified above apply for ideal square wave signals.

Rotational direction

The rotational direction can be determined by a signal B which has a constructively fixed phase shift in relation to the signal A. For the definition the view at the shaft the is used:

- Clockwise rotation = right turn = signal A leading signal B
- Counter/Anticlockwise rotation = left turn = signal A lagging signal B

Additional Information on the analysis of the rotational direction you can find here:
Hardware-manual (50134713), chapter "Safe direction (SDI)"

For an encoder with flange it has to be considered that from the view of the sensor on its flange the rotational direction is reversed.

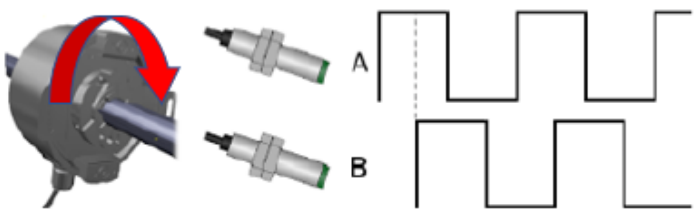

4.5.1.2.2 NC and NO contacts

Normally open (NO) **Normally open (NO)**		When activated, the sensor switches on.
Normally closed (NC) **Normally closed (NC)**	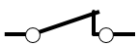	When activated, the sensor switches off.
NC/NO contacts **(NO/NC)**	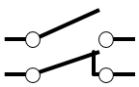	When activated, the sensor switches both outputs

Square wave form not essential

The MSI 400 controllers initially detect voltage changes at input terminals I13 to I16 regardless of their chronological sequence. The electronics and firmware interpret every level change as an ”impulse” with reference to the following limits:

Open Collector (OC) input	U_{high} = 15 to 30 V I_{high} = 3 to 8 mA U_{Low} = 0 to 10 V f_{input} = 0.1 to 5 kHz $t_R \leq 0.05 * t_{Impulse}$ $t_F \leq 0.05 * t_{Impulse}$
Push Pull (PP) input	U_{high} = 15 to 30 V I_{high} = 3 to 8 mA U_{low} = 0 to 5 V I_{low} = -3 to -8 mA f_{input} = 0.1 to 70 kHz $t_R \leq 0.05 * t_{Impulse}$ $t_F \leq 0.05 * t_{Impulse}$

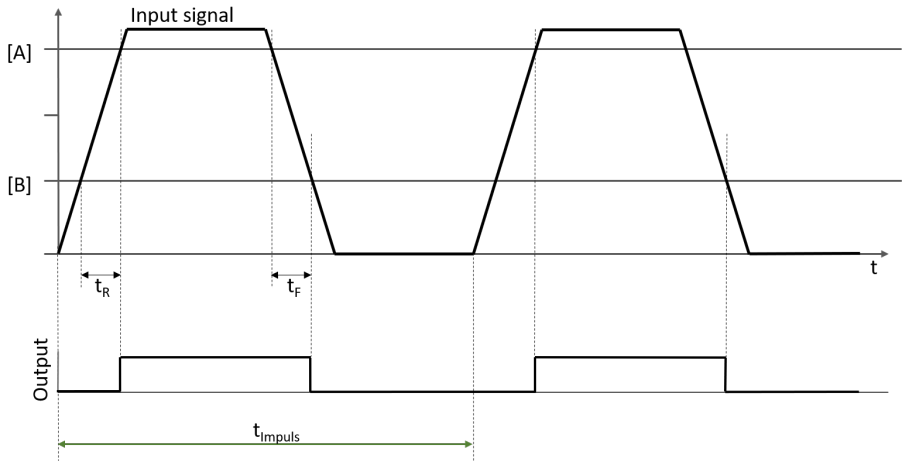

Fig. 4.7: Schmitt trigger circuit (threshold value circuit) in the controller

[A]	High threshold
[B]	Low threshold
t_R	Rise time
T_F	Fall time
$t_{impulse}$	Period time of an impulse

4.5.1.2.3 PNP and NPN

- On PNP sensors, the output is connected to the positive operating voltage when in an active state (on **high-side** open collector).
- On NPN sensors, the output is connected to the negative operating voltage when in an active state.

	NOTICE
	The MSI 400.F50 modules only support sensors with a PNP output!

WARNING

Configuration open-collector

- Only use the Configuration "Open-Collector" if the used sensor absolutely demands it.
- The configuration "Open-Collector" reduces SFF and consequently for some sensor combinations the safety characteristics.
- In case of doubt use the configuration "Open-Collector with Stuck-at Low".

Sensors with a PNP or NPN output are usually designed in 3-conductor technology (power supply, 0V and output Q).

Sensors with antivalent outputs (NO and NC contacts) are usually designed in 4-conductor technology (power supply, 0V, output Q and output Q/).

4.5.1.2.4 Sensors with open collector outputs

On sensors with open collector outputs, the power supply (positive or negative, see PNP and NPN) is connected to the output when in an active state.

NOTICE

On sensors with an open collector output, a distinction is not made between a complete cable break and an inactive state and so the break cannot be detected.

If a so-called stuck-at-low error occurs, the signals at the input of the controller module remain at low level.

- Possible fault exclusion: Use of a push-pull sensor.

4.5.1.2.5 Sensors with push-pull outputs

On sensors with push-pull outputs, a cable break can be detected directly.

Detection is essential on sensors with fewer than 4 tracks. Only then can a cable break be clearly distinguished from a standstill at the signal levels.

NOTICE

Cable break detection is generally safety-relevant because a distinction cannot be made between a starting axis with a disconnected sensor plug and a stationary axis

Note: Most HTL encoders operate with push-pull outputs, although this is not an essential feature. Check the output circuit of the sensors you are using!

4.5.1.2.6 Limiting frequencies

The MSI 400.F50 controller modules can process square wave signals from the sensors within a frequency range of 0.1 Hz to 70 kHz.

The sensors are scaled in MSI.designer in the properties of the respective sensor elements. The scaling factor describes the relationship between the sensor signal and mechanics of the monitored mechanical unit e.g. in

- impulses per revolution
- impulses per distance traveled

Practical application examples

- On a proximity sensor, the maximum frequency is not usually limited by the controller module, but by the sensor. If a proximity sensor is operated, for example, with a limiting frequency of 700 Hz on a toothed disc with 12 impulses per revolution, the maximum speed achieved is 3500 rpm.
- An incremental encoder for rotary motions (rotational) with 1024 impulses per revolution achieves a maximum speed of approx. 5860 rpm.
- On the drive of a linear axis, a rotational motion is transformed into a linear motion via a ball screw drive. On the drive side, the movement is detected by a rotary incremental encoder with 1024 impulses per revolution. The distance and speed of the linear motion must be calculated using the pitch of the

spindle. In practice, the permitted speed at the ball screw drive, e.g. 2000 rpm, often acts as a limit here.
A pitch of 20 mm per revolution produces a maximum speed of 2000 rpm x 20 mm = 40 m/s.

Important note: The examples mentioned are designed to clarify the system limits. The scaling factors for the sensors used must always be calculated during project planning and parameterized at the sensor elements in MSI.designer. See also: Scaling factors

4.5.1.3 Connection and wiring

4.5.1.3.1 Information on connecting sensors

WARNING

Observe the screen specifications

- Use screened lines to connect the sensors.
- Earth the screen on the module or in the control cabinet.
- We recommend the WST…/T35 screen earthing terminal for earthing the screen on MSI 400.
- Position the screen earthing terminal as close to the module as possible and keep the stripped ends for connection to the module as short as possible.

NOTICE

Recommendation for sensors and line lengths

The maximum line length between sensor and module is dependent on the output type of the sensor. To achieve as fault-free transmission as possible, we recommend, besides an earthed and screened cable, using sensors with push-pull outputs.

- Sensor with open collector: max. 15 m
- Sensor with push-pull output: max. 50 m

  The attenuation factors of the cables and connecting elements used (connectors, etc.) are decisive in determining the cable lengths.
- Cables attenuate the signal. If the length is too long, an impermissibly high weakening of the signal occurs.
- If the screening is not optimal, external interference may change the sensor signals in a prohibited way.

Connection of proximity sensors

Capacitive or inductive proximity switches with a PNP output and 3-conductor connection can be connected to the controller modules.

Please note the following information:

- Use 2 sensors with an A and phase-shifted B signal to detect the direction of rotation or travel.
- To improve safety, use at least 2 sensors, of which 1 sensor is always active.

Connection of incremental encoders

HTL encoders with PNP outputs can be connected to the controller modules.

Please note the following information:

- Use incremental encoders with an A and phase-shifted B signal to detect the direction of rotation or travel.
- To improve safety, use an incremental encoder with A and phase-shifted B signal as well as antivalent signals A/ and B/.

4.5.1.3.2 Connection options of the sensors to the controller module

Sensor type	Max. number of sensors in the logic project	Connection terminals			
		I13	I14	I15	I16
Proximity sensor (A)	2		A1		A2
Proximity sensor, antivalent (A,A/)	2	A1	A2	A1/	A2/
2 proximity sensors (A,B)	2	A1	A2	B1	B2
2 proximity sensors, antivalent (A, A/, B,B/)	1	A	A/	B	B/
HTL incremental encoder (A,B)	2	A1	A2	B1	B2
HTL incremental encoder, antivalent (A,A/, B,B/)	1	A	A/	B	B/

Note: MSI.designer helps you with project planning and allows the creation of the connections and configurations mentioned above from different sensor combinations. Please use MSI.designer to check whether the required connection combination is permitted.

4.5.1.3.3 Example: Connection of proximity sensors

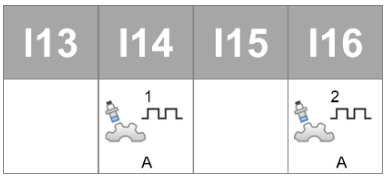

Fig. 4.8: Two proximity sensors

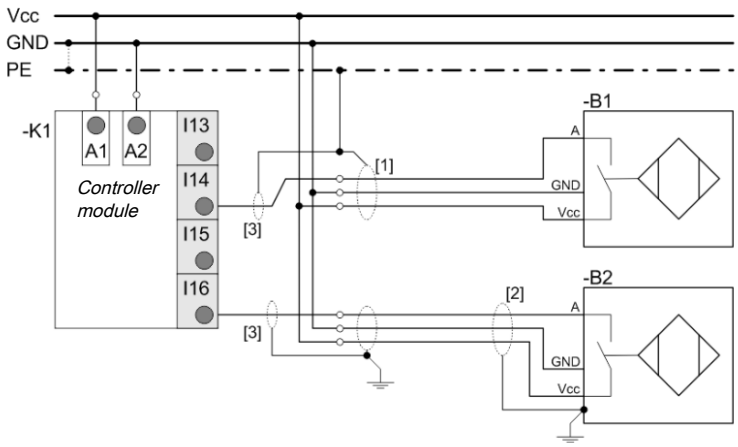

Fig. 4.9: Example: Two proximity sensors (2 x A)

[1]	Recommended: Connection of screening to PE in the control cabinet
[2]	**Not recommended**: Connection of screening with PE at the sensor housing
[3]	Recommended: Screening of signal line up to earthed screening terminal in the control cabinet

4.5.1.3.4 Example: Connection of 2 x 2 proximity sensors with tracks A, B

Two proximity sensors with phase-shifted signals for direction detection

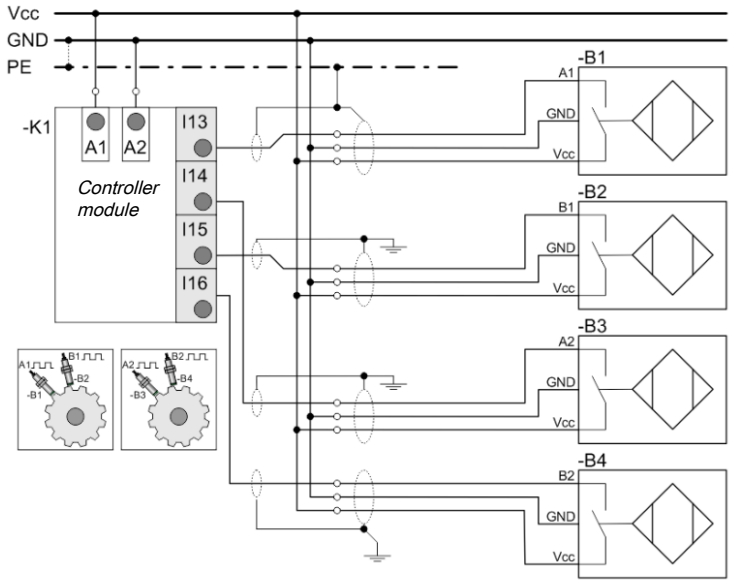

Fig. 4.10: Two sets of two proximity sensors for monitoring two axes

4.5.1.3.5 Example: Connection of HTL encoders with tracks A, B

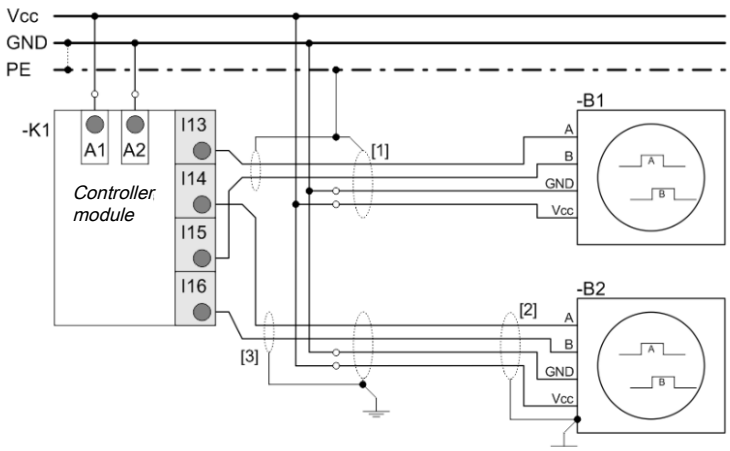

Fig. 4.11: Two HTL encoders with A/B signal for monitoring two axes

4.5.1.3.6 Example: Connection of an antivalent HTL encoder with tracks A, A/, B, B/

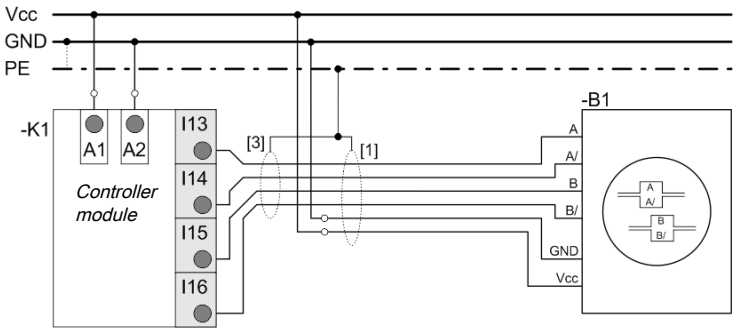

Fig. 4.12: One HTL encoder for monitoring one axis

Unassigned inputs

If motion monitoring sensors are not assigned to inputs I13, I14, I15 and I16, other signals must **not** be assigned to them either, e.g. switching contacts.

Example:

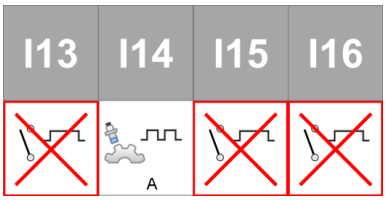

Fig. 4.13: Single-channel proximity switch (A) at I14, no other standard sensors or switching contacts may be connected to inputs I14, I15 and I16.

4.5.1.3.7 Note on safe installation in line with EMC provisions

The MSI 400 safety control fulfills the EMC provisions in accordance with basic technical standard EN 61000-6-2 for the industrial sector.

In order to guarantee that the installation complies with EMC provisions, observe the following notes as well as the information provided by the manufacturers of the components used, e.g. sensors.

- The hat rail for mounting the MSI 400 modules must be connected to the functional earth (FE)!
- All the modules of the MSI 400 system, the connected safety equipment and power supply/supplies should be connected with the same 0 V DC connection (GND).
- Avoid loops between the GND potential, e.g. between the USB interface and the A2 connection on the controller module, by using interfaces with optocouplers, for example.
- Ensure that the cables between the controller modules and sensors are screened and connect only one side of the screen to GND or earth.

Further information on electrical installation

- Industrial safety devices from Leuze electronic are only suitable for local direct-current applications. If the device is to be used in power supply mains, e.g. in accordance with IEC 61326-3-1, then implement additional safety measures.
- Install all components of the MSI 400 system in one control cabinet with a minimum protection class of IP 54.
- Configure electrical installation according to EN 60204-1.
- The power supply of the devices must able to bridge a short-term power outage of 20 ms in accordance with EN 60204-1. Provide appropriate power packs.
- The power supply must meet the regulations for low-voltage with safe disconnection (SELV, PELV) in accordance with EN 60664 and EN 50178 (equipping high-voltage systems with electronic equipment).
- Always ensure MSI 400 components and sensors are disconnected from the power supply before installing and connecting them.

4.5.2 Sensors and attainable safety level

4.5.2.1 General information

NOTICE
The attainable safety level (PL or SIL) depends on the subsystems ↳ Sensor ↳ Safety controller (safety functions) ↳ Actuators In order to select suitable sensors, the properties of the actual sensors and the safety controller must be known and assessed at least.

NOTICE
The time response of the control and the error detection depends on the application-specific cycle time of the MSI 400 controller and therefore the programmed safety functions.

The expected cycle time in the individually configured system is displayed in MSI.designer at the bottom right. This cycle time must be used to check the attainable safety level. See also: *Response times and error detection times [chapter 12.2]*

Certain basic information is essential in selecting suitable motion monitoring sensors:

Which safety level should be attained?	During the risk analysis, hazards are identified and assessed, and measures for minimizing risks are defined. For technical control measures, an assessment of the machine structure, for example, is conducted according to EN 13849-1. The safety level specification, also called the Required Performance Level (PL_r), is determined with reference to the evaluation.
Does the direction of rotation or travel have to be monitored?	Direction detection requires 2-channel sensors that generate 2 phase-shifted signals. This can be achieved using 2 proximity sensors or an incremental encoder with AB tracks.
Does the position have to be monitored?	Position detection requires 2-channel sensors that can detect the rotational direction. As a result, the position can be counted upward or downward following a reference run.
Switching technology in the sensor	Sensors can have different output circuits (e.g. push-pull, open collector or special circuits specific to the manufacturer). The output type used has a direct influence on the possibilities of error detection and degree of diagnostic coverage (DC) that can be achieved.
Architecture of the safety function	The categories (Cat.) outlined in EN 13849-1 describe the required performance of safety-related parts of a control when errors occur.

4.5.2.1.1 Determining the attainable safety level

The technical safety characteristics of the MSI 400 modules and all other devices used must be taken into consideration when calculating the maximum attainable safety level. We recommend using the SISTEMA tool to calculate the PL values of the safety function.

NOTICE	
	The manufacturer or designer is responsible for the risk analysis and assessment as well as for designing the technical safety parts of the control correctly. This also includes calculating the Performance Level or SIL values for the selected safety functions. Of course, you can always contact Leuze electronic to benefit from a professional risk analysis and risk assessment service. Further information: *Safety technology reference values [chapter 12.3]*

The following safety reviews only take the **Sensor** and **Control logic** (MSI 400.F50) subsystems into consideration. The examples are only used for orientation purposes to identify suitable sensors and sensor combinations.

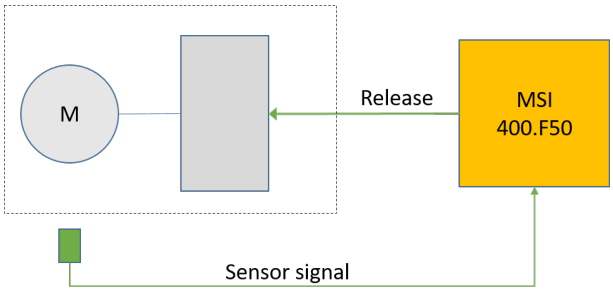

Fig. 4.14: Subsystems of a safety controller

[1]	Subsystem sensor
[2]	Subsystem MSI 400.F50 (logic)
[3]	Subsystem actuator – not considered here!

You can find further information about the safety characteristics of the MSI 400 system here: *Safety technology reference values [chapter 12.3]*

The values for the different sensor types as well as the planned functions can be found in the detailed descriptions of the sensors: *Sensors and attainable safety level [chapter 4.5.2]*

Information on MTTF and $MTTF_D$ time

Only the manufacturer can provide the MTTF and $MTTF_D$ values for the sensors. Assuming that all errors are dangerous, MTTF = $MTTF_D$ can be set. The MTTF time can be found in the data sheet from the sensor manufacturer.

Information on PFH and PFHd

The PFH value of the sensor is the average probability of a failure per hour. The PFH value can be calculated from the MTTF and degree of diagnostic coverage (DC).

The degree of diagnostic coverage (DC) for the server is specified in the following chapters in combination with MSI 400.F50 (logic).

If the dangerous failure rate is not known, the probability of a failure of the safety function per hour (PFHd) can be calculated as follows, assuming that all errors are dangerous: $PFH_d = (1 - DC) / MTTF_{Sensor}$

Information on selecting sensors

If sensors with safety-related embedded software (SRESW) is used according to **EN ISO 13849**, their suitability must be ensured in order to attain the **safety characteristics specified in EN ISO 13849** as outlined in the following section.

The safety characteristics in EN 61508 specified in the following stipulate the use of sensors with a degree of suitability defined in DIN EN 61508. This applies to type B sensors, in particular.

Calculation example for the attainable safety level

The following data for the **Sensor** and MSI 400 subsystems is required to calculate the safety function

Safety characteristics according to EN ISO 13849

Safety function	Requirements for subsystem sensor			DC subsystem sensor	Max. attainable PL
	Sensor output	$MTTF_D$	Category		
Speed	Open collector	See Manufacturer	1	60 % (low)	c

Safety characteristics according to EN 61508

Safety function	Requirements for subsystem sensor			SFF subsystem sensor	Max. attainable SIL
	Sensor output	Sensor type according to EN 61508	HFT according to EN 61508		
Speed	Open collector	Type B	0	< 60 %	None
Speed	Open collector	Type A	0	<60 %	SIL 1

Explanations for the example table

Safety function	The category of the motion monitoring safety function from chapter “Reference of the safety functions”. Possible functions include:
	• Speed monitoring
	  • Standstill (speed with/without direction)
	  • SSR (with/without direction)
	  • SLS (with/without direction)
	  • SSM (with/without direction)
	• Position monitoring
	  • Standstill (with position)
	  • SLP
	• Direction monitoring
	  • SDI

Sensor output	Electric interface of sensor output • Open-Collector with stuck at low: Detection stuck at low • Open-Collector Attention: limited Diagnostics! • Push-Pull: Detection cable break
Category	Category of the subsystem sensor according to EN 13849-1: 1
$MTTF_D$	$MTTF_D$ (Mean Time to Failure Dangerous) according to EN ISO 13849-1. Average time interval between dangerous errors. If the failure rate is not known, MTTF can be used for $MTTF_D$. $MTTF_D$ value from the Sensor subsystem should be considered together with other parameters in Appendix K of EN ISO 13849-1

DC	Degree of diagnostic coverage of the Sensor subsystem according to EN ISO 13849-1. Important: A diagnosis can only be performed in combination with MSI 400.F50 (Logic). Possible values from EN ISO 13849-1 include: • None • Low • Medium • High
Max. attainable PL	Maximum attainable Performance Level according to EN 13849-1
Sensor type	Type of sensor according to EN 61508. Possible values include: • Type A • Type B In the event of uncertainties, users should always select type B.
HFT	Hardware failure tolerance according to EN 61508. The hardware failure tolerance describes the system architecture: • HFT = 0: the first failure can result in a loss of safety. (typically applies for single-channel structure) • HFT = 1: A single error does not yet lead to a loss of safety (typically applies for 2-channel structure)
SFF	Proportion of safe failures of an element according to EN 61508.
Max. attainable SIL	Maximum attainable Safety Integrity Level according to IEC 61511

4.5.2.2 Proximity sensor A

- Available safety functions include:
  - Speed monitoring without direction (standstill, SLS, SSR, SSM)
- NO or NC, e.g. inductive standard proximity switch
- Electric version: PNP, 3-wire
  - L+: Power supply (e.g. 24V DC)
  - L-: Neutral
  - A: Sensor signal NO
- Toothed disc compatible with sensor
- The sensor only generates one output signal A.
- Cable break detection possible on sensors with push-pull output.
- Stuck-at-low detection possible on sensors with open collector output.

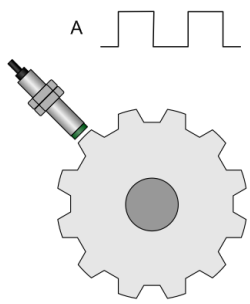

WARNING

The following characteristics require the exclusion of a fault in the mechanics according to EN 61800-5-2:2017 Table D.8.

4.5.2.2.1 Characteristic values when using a single channel sensor

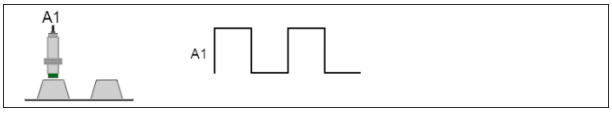

Safety characteristics according to EN ISO 13849

Safety function	Requirements for subsystem sensor			DC subsystem sensor	Max. attainable PL
	Sensor output	$MTTF_D$	Category		
Standstill, SLS, SSR, SSM (no rotational direction)	Open collector	See Manufacturer	1	None	c
Standstill, SLS, SSR, SSM (no rotational direction)	Push-pull	See Manufacturer	1	None	c

Safety characteristics according to EN 61508

Safety function	Requirements for subsystem sensor			SFF subsystem sensor	Max. attainable SIL
	Sensor output	Sensor type according to EN 61508	HFT according to EN 61508		
Standstill, SLS, SSR, SSM (no rotational direction)	Open collector	Type B	0	< 60%	No SIL
Standstill, SLS, SSR, SSM (no rotational direction)	Push-pull	Type B	0	< 60%	No SIL
Standstill, SLS, SSR, SSM (no rotational direction)	Open collector	Type A	0	< 60 %	SIL 1
Standstill, SLS, SSR, SSM (no rotational direction)	Push-pull	Type A	0	< 60 %	SIL 1

4.5.2.2.2 Characteristics when using 2 single channel sensors for redundant motion detection

Important: Both encoders with any phase shift record the same axis and both encoders are connected to the same functional component.

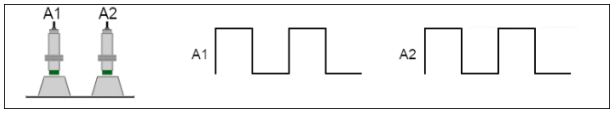

WARNING

The following characteristic values apply under the condition that a cross-connection between the sensor cables of A1 and A2 is excluded. This fault exclusion can be achieved if lines are laid appropriately according to EN ISO 13849-2:2012, Table D.4.

Safety characteristics according to EN ISO 13849

Safety function	Requirements for subsystem sensor			DC subsystem sensor	Max. attainable PL
	Sensor output	$MTTF_D$	Category		
Standstill, SLS, SSR, SSM (no rotational direction)	Open collector with stuck-at low	See Manufacturer	3	90 % (average)	d
Standstill, SLS, SSR, SSM (no rotational direction)	Push-pull	See Manufacturer	3	90 % (average)	d

Safety characteristics according to EN 61508

Safety function	Requirements for subsystem sensor			SFF subsystem sensor	Max. attainable SIL
	Sensor output	Sensor type according to EN 61508	HFT according to EN 61508		
Standstill, SLS, SSR, SSM (no rotational direction)	Open collector with stuck-at low	Type B	1	60 %	SIL 2
Standstill, SLS, SSR, SSM (no rotational direction)	Push-pull	Type B	1	60 %	SIL 2
Standstill, SLS, SSR, SSM (no rotational direction)	Open collector with stuck-at low	Type A	1	60 %	SIL 3
Standstill, SLS, SSR, SSM (no rotational direction)	Push-pull	Type A	1	60 %	SIL 3

4.5.2.3 Proximity sensor A, A/

• Available safety functions include:
  • Speed monitoring without direction (standstill, SLS, SSR, SSM)
• NO and NC, e.g. inductive standard proximity switch
• Electric version: PNP, 4-wire
  • L+: Power supply (e.g. 24V DC)
  • L-: Neutral
  • A: Sensor signal NO
  • A/: Sensor signal NC
• Toothed disc compatible with sensor.
• The sensor delivers two output signals A and A/.
• Rotational direction recognition is **not** possible.
• Cable break detection possible on sensors with push-pull output.
• Stuck-at-low detection possible on sensors with open collector output. Not possible for sensors with open collector without stuck-at-low detection.
	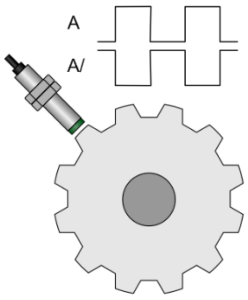

4.5.2.3.1 Characteristics when using an antivalent sensor

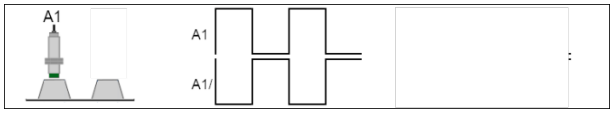

WARNING

The following characteristics require the exclusion of a fault in the mechanics according to EN 61800-5-2:2017 Table D.8.

If a mechanical fault exclusion is not possible in the actual application, the maximum attainable category according to EN 13849-1 is reduced to Cat. 2 and the DC value is reduced to “low”.

Safety characteristics according to EN ISO 13849

Safety function	Requirements for subsystem sensor			DC subsystem sensor	Max. attainable PL
	Sensor output	$MTTF_D$	Category		
Standstill, SLS, SSR, SSM (no rotational direction)	Open collector with stuck at low	See Manufacturer	2	90% (average)	d
Standstill, SLS, SSR, SSM (no rotational direction)	Open collector without stuck at low	See Manufacturer	2	90% (average)	d
Standstill, SLS, SSR, SSM (no rotational direction)	Push-pull	See Manufacturer	2	90% (average)	d

Safety characteristics according to EN 61508

Safety function	Requirements for subsystem sensor			SFF subsystem sensor	Max. attainable SIL
	Sensor output	Sensor type according to EN 61508	HFT according to EN 61508		
Standstill, SLS, SSR, SSM (no rotational direction)	Open collector with stuck at low	Type B	0	90%	SIL 2
Standstill, SLS, SSR, SSM (no rotational direction)	Open collector without stuck at low	Type B	0	90 %	SIL 2
Standstill, SLS, SSR, SSM (no rotational direction)	Push-pull	Type B	0	90 %	SIL 2
Standstill, SLS, SSR, SSM (no rotational direction)	Open collector with stuck at low	Type A	0	90 %	SIL 3
Standstill, SLS, SSR, SSM (no rotational direction)	Open collector without stuck at low	Type A	0	90 %	SIL 3
Standstill, SLS, SSR, SSM (no rotational direction)	Push-pull	Type A	0	90 %	SIL 3

4.5.2.3.2 Characteristics when using 2 antivalent sensors for redundant motion detection

Important: Both encoders with any phase shift detect the same axis!

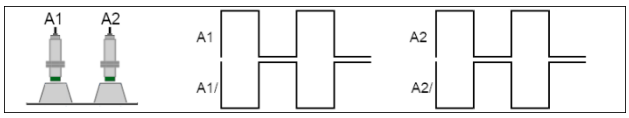

NOTICE

Caution: The following characteristics require that both sensors are never affected by a mechanical fault simultaneously according to EN 61800-5-2:2017 Table D.8.

Safety characteristics according to EN ISO 13849

Safety function	Requirements for subsystem sensor			DC subsystem sensor	Max. attainable PL
	Sensor output	$MTTF_D$	Category		
Standstill, SLS, SSR, SSM (no rotational direction)	Open collector with stuck-at low	See Manufacturer	4	99 % (high)	e
Standstill, SLS, SSR, SSM (no rotational direction)	Open collector without stuck-at low	See Manufacturer	4	99 % (high)	e
Standstill, SLS, SSR, SSM (no rotational direction)	Push-pull	See Manufacturer	4	99 % (high)	e

Safety characteristics according to EN 61508

Safety function	Requirements for subsystem sensor			SFF subsystem sensor	Max. attainable SIL
	Sensor output	Sensor type according to EN 61508	HFT according to EN 61508		
Standstill, SLS, SSR, SSM (no rotational direction)	Open collector with stuck-at low	Type B	1	90 %	SIL 3
Standstill, SLS, SSR, SSM (no rotational direction)	Open collector without stuck-at low	Type B	1	90 %	SIL 3
Standstill, SLS, SSR, SSM (no rotational direction)	Push-pull	Type B	1	90 %	SIL 3
Standstill, SLS, SSR, SSM (no rotational direction)	Open collector with stuck-at low	Type A	1	90 %	SIL 3
Standstill, SLS, SSR, SSM (no rotational direction)	Open collector without stuck-at low	Type A	1	90 %	SIL 3
Standstill, SLS, SSR, SSM (no rotational direction)	Push-pull	Type A	1	90 %	SIL 3

4.5.2.4 2 proximity sensors A, B

- Available safety functions include:
  - Standstill monitoring (standstill)
  - Speed monitoring with/without direction (SLS, SSR, SSM)
  - Safe direction (SDI)
  - Position monitoring (SLP)
- 2 proximity sensors
- NO or NC, e.g. inductive standard proximity switch
- Electric version: PNP, 3-wire
  - L+: Power supply (e.g. 24V DC)
  - L-: Neutral
  - A: Sensor signal NO
- Toothed disc compatible with sensor.
- Each sensor delivers an output signal A or B.
- Rotational direction recognition is possible by shifting the phase between A and B.
  Further information on phase shifting: *Sensor requirements [chapter 4.5.1.2]*
- Cable break detection possible on sensors with push-pull output.
- Stuck-at-low detection possible on sensors with open collector output

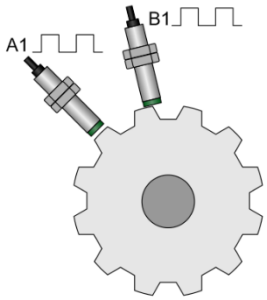

4.5.2.4.1 Characteristics when using 2 proximity sensors A, B

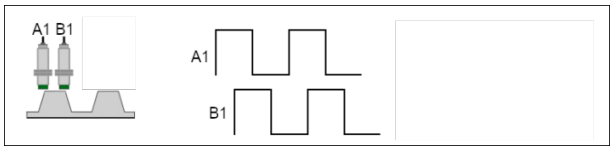

WARNING

- The following characteristics require the exclusion of a fault in the mechanics according to EN 61800-5-2:2017 Table D.8.
- The following characteristics only apply on the condition that a cross circuit between the sensor lines of A1 and B1 is excluded. This fault exclusion can be achieved if lines are laid appropriately according to EN ISO 13849-2:2012, Table D.4.

Safety characteristics according to EN ISO 13849

Safety function	Requirements for subsystem sensor			DC subsystem sensor	Max. attainable PL
	Sensor output	$MTTF_D$	Category		
Standstill, SLS, SSR, SSM (no rotational direction)	Open collector with stuck-at low	See manufacturer	2	60 % (low)	d
Standstill, SLS, SSR, SSM (no rotational direction)	Push-pull	See manufacturer	2	60 % (low)	d

Safety function	Requirements for subsystem sensor			DC subsystem sensor	Max. attainable PL
	Sensor output	$MTTF_D$	Category		
Standstill, SLS, SSR, SSM (with rotational direction) SDI and SLP	Open collector with stuck-at low	See manufacturer	1	None	c
Standstill, SLS, SSR, SSM (with rotational direction) SDI and SLP	Push-pull	See manufacturer	1	None	c

Safety characteristics according to EN 61508

Safety function	Requirements for subsystem sensor			SFF subsystem sensor	Max. attainable SIL
	Sensor output	Sensor type according to EN 61508	HFT according to EN 61508		
Standstill, SLS, SSR, SSM (no rotational direction)	Open collector	Type B	1	< 60 %	SIL 1
Standstill, SLS, SSR, SSM (no rotational direction)	Push-pull	Type B	1	< 60 %	SIL 1
Standstill, SLS, SSR, SSM (with rotational direction) SDI and SLP	Open collector with stuck-at low	Type B	1	< 60 %	No SIL
Standstill, SLS, SSR, SSM (with rotational direction) SDI and SLP	Push-pull	Type B	1	< 60 %	No SIL
Standstill, SLS, SSR, SSM (no rotational direction)	Open collector	Type A	1	< 60 %	SIL 2
Standstill, SLS, SSR, SSM (no rotational direction)	Push-pull	Type A	1	< 60 %	SIL 2
Standstill, SLS, SSR, SSM (with rotational direction) SDI and SLP	Open collector with stuck-at low	Type A	1	< 60 %	SIL 1

Safety function	Requirements for subsystem sensor			SFF subsystem sensor	Max. attainable SIL
	Sensor output	Sensor type according to EN 61508	HFT according to EN 61508		
Standstill, SLS, SSR, SSM (with rotational direction) SDI and SLP	Push-pull	Type A	1	< 60 %	SIL 1

4.5.2.4.2 Characteristics when using 4 sensors for redundant motion detection

Important: Both encoders detect the same axis! The phase shift between the pairs (A1, B1) and (A2, B2) can be arbitrary.

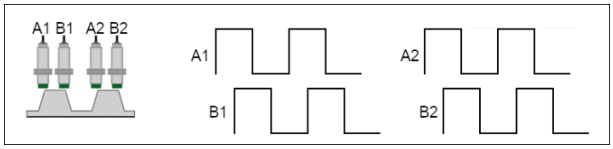

WARNING

- The following characteristic values only apply under the condition that a cross-connection between the sensor cables of A1 and A2 and B1 and B2 is excluded. This error exclusion can be performed with suitable cable routing according to EN ISO 13849-2:2012, Table D4.
- The following characteristic values for the open collector sensor output only apply under the condition that a complete cable break, i.e. interruption of all 4 sensor signals, is excluded.

Safety characteristics according to EN ISO 13849

Safety function	Requirements for subsystem sensor			DC subsystem sensor	Max. attainable PL
	Sensor output	$MTTF_D$	Category		
Standstill, SLS, SSR, SSM, SDI, SLP	Open collector with stuck-at low	See Manufacturer	3	60 % (low)	d
Standstill, SLS, SSR, SSM, SDI, SLP	Push-pull	See Manufacturer	3	60 % (low)	d

Safety characteristics according to EN 61508

Safety function	Requirements for subsystem sensor			SFF subsystem sensor	Max. attainable SIL
	Sensor output	Sensor type according to EN 61508	HFT according to EN 61508		
Standstill, SLS, SSR, SSM, SDI, SLP	Open collector with stuck-at low	Type B	1	> 60%	SIL 2
Standstill, SLS, SSR, SSM, SDI, SLP	Open collector with stuck-at low	Type B	1	< 60 %	SIL 1
Standstill, SLS, SSR, SSM, SDI, SLP	Push-pull	Type B	1	> 60 %	SIL 2

Safety function	Requirements for subsystem sensor			SFF subsystem sensor	Max. attainable SIL
	Sensor output	Sensor type according to EN 61508	HFT according to EN 61508		
Standstill, SLS, SSR, SSM, SDI, SLP	Open collector with stuck-at low	Type A	1	> 60 %	SIL 3
Standstill, SLS, SSR, SSM, SDI, SLP	Open collector with stuck-at low	Type A	1	< 60%	SIL 2
Standstill, SLS, SSR, SSM, SDI, SLP	Push-pull	Type A	1	> 60 %	SIL 3

4.5.2.5 Proximity sensors A, A/, B, B/

- Available safety functions include:
  - Standstill monitoring (standstill)
  - Speed monitoring with/without direction (SLS, SSR, SSM)
  - Safe direction (SDI)
  - Position monitoring (SLP)
- 2 proximity sensors
- NO and NC, e.g. inductive standard proximity switch
- Electric version: PNP, 4-wire
  - L+: Power supply (e.g. 24V DC)
  - L-: Neutral
  - A: Sensor signal NO
  - A/: Sensor signal NC
- Toothed disc compatible with sensor.
- Each sensor delivers two output signals A and A/ or B and B/.
- Rotational direction recognition is possible by shifting the phase between A and B.
- Cable break detection possible on sensors with push-pull output.
- Stuck-at-low detection possible on sensors with open collector output.

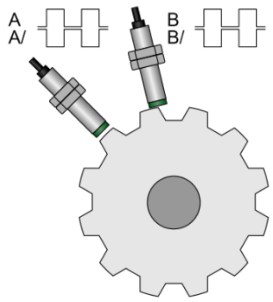

4.5.2.5.1 Characteristics when using 2 antivalent sensors

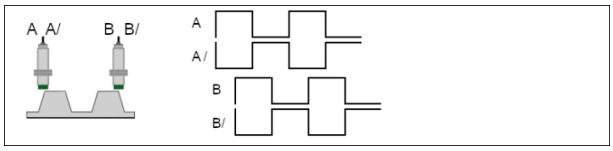

WARNING

The following characteristics require the exclusion of a fault in the mechanics according to EN 61800-5-2:2017 Table D.8.

Safety characteristics according to EN ISO 13849

Safety function	Requirements for subsystem sensor			DC subsystem sensor	Max. attainable PL
	Sensor output	$MTTF_D$	Category		
Standstill, SLS, SSR, SSM (no rotational direction)	Open collector with stuck-at low	See Manufacturer	2	90 % (average)	d
Standstill, SLS, SSR, SSM (no rotational direction)	Open collector without stuck-at low	See Manufacturer	2	90 % (average)	d
Standstill, SLS, SSR, SSM (no rotational direction)	Push-pull	See Manufacturer	2	90 % (average)	d
Standstill, SLS, SSR, SSM (with rotational direction) DI and SLP	Open collector with stuck-at low	See Manufacturer	2	90 % (average)	d
Standstill, SLS, SSR, SSM (with rotational direction) SDI and SLP	Open collector without stuck-at low	See Manufacturer	2	90 % (average)	d
Standstill, SLS, SSR, SSM (with rotational direction) SDI and SLP	Push-pull	See Manufacturer	2	90 % (average)	d

Safety characteristics according to EN 61508

Safety function	Requirements for subsystem sensor			SFF subsystem sensor	Max. attainable SIL
	Sensor output	Sensor type according to EN 61508	HFT according to EN 61508		
Standstill, SLS, SSR, SSM (no rotational direction)	Open collector with stuck-at low	Type B	0	90 %	SIL 2
Standstill, SLS, SSR, SSM (no rotational direction)	Open collector without stuck-at low	Type B	0	90 %	SIL 2
Standstill, SLS, SSR, SSM (no rotational direction)	Push-pull	Type B	0	90 %	SIL 2

Safety function	Requirements for subsystem sensor			SFF subsystem sensor	Max. attainable SIL
	Sensor output	Sensor type according to EN 61508	HFT according to EN 61508		
Standstill, SLS, SSR, SSM (with rotational direction) SDI and SLP	Open collector with stuck-at low	Type B	0	90 %	SIL 2
Standstill, SLS, SSR, SSM (with rotational direction) SDI and SLP	Open collector without stuck-at low	Type B	0	90 %	SIL 2
Standstill, SLS, SSR, SSM (with rotational direction) SDI and SLP	Push-pull	Type B	0	90 %	SIL 2
Standstill, SLS, SSR, SSM (no rotational direction)	Open collector with stuck-at low	Type A	0	90 %	SIL 3
Standstill, SLS, SSR, SSM (no rotational direction)	Open collector without stuck-at low	Type A	0	90 %	SIL 3
Standstill, SLS, SSR, SSM (no rotational direction)	Push-pull	Type A	0	90 %	SIL 3
Standstill, SLS, SSR, SSM (with rotational direction) SDI and SLP	Open collector with stuck-at low	Type A	0	90 %	SIL 3
Standstill, SLS, SSR, SSM (with rotational direction) SDI and SLP	Open collector without stuck-at low	Type A	0	90 %	SIL 3
Standstill, SLS, SSR, SSM (with rotational direction) SDI and SLP	Push-pull	Type A	0	90 %	SIL 3

4.5.2.6 Standard HTL incremental encoder with 2 tracks A, B

- Available safety functions include:
  - Standstill monitoring (standstill)
  - Speed monitoring with/without direction (SLS, SSR, SSM)
  - Safe direction (SDI)
  - Position monitoring (SLP)
- Incremental encoder with 2 tracks
- Electric version: Push-pull, HTL
- Incremental encoder delivers two output signals A and B.
- Rotational direction recognition is possible by shifting the phase between A and B.
- Cable break detection possible on sensors with push-pull output.

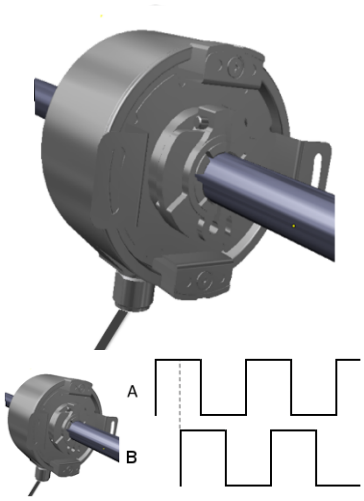

4.5.2.6.1 Characteristics when using 1 incremental encoder

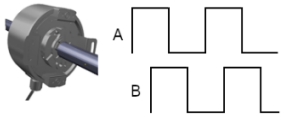

Safety characteristics according to EN ISO 13849

Safety function	Requirements for subsystem sensor			DC subsystem sensor	Max. attainable PL
	Sensor output	$MTTF_D$	Category		
Standstill, SLS, SSR, SSM (no rotational direction)	Push-pull	See Manufacturer	B	None	b
Standstill, SLS, SSR, SSM (with rotational direction) SDI and SLP	Push-pull	See Manufacturer	B	None	b

Safety characteristics according to EN 61508

Safety function	Requirements for subsystem sensor			SFF subsystem sensor	Max. attainable SIL
	Sensor output	Sensor type according to EN 61508	HFT according to EN 61508		
Standstill, SLS, SSR, SSM (no rotational direction)	Push-pull	Type B	0	< 60 %	no SIL
Standstill, SLS, SSR, SSM (with rotational direction) SDI and SLP	Push-pull	Type B	0	< 60 %	no SIL

4.5.2.6.2 Characteristics when using 2 encoders for redundant motion detection

Important: Both encoders record the same movement! To achieve the maximum safety characteristics, these encoders must use different technologies (e.g. different speeds due to gear ratio or different manufacturers).

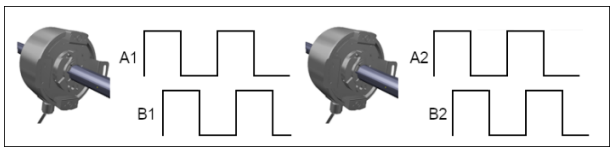

WARNING

The following characteristic values only apply under the condition that a cross-connection between the sensor cables of A1 and A2 and B1 and B2 is excluded. This fault exclusion can be achieved if lines are laid appropriately according to EN ISO 13849-2:2012, Table D.4.

Safety characteristics according to EN ISO 13849

Safety function	Requirements for subsystem sensor			DC subsystem sensor	Max. attainable PL
	Sensor output	$MTTF_D$	Category		
Standstill, SLS, SSR, SSM (no rotational direction)	Push-pull	See Manufacturer	3	60 % (low)	d
Standstill, SLS, SSR, SSM (with rotational direction) SDI and SLP	Push-pull	See Manufacturer	3	60 % (low)	d

Safety characteristics according to EN 61508

Safety function	Requirements for subsystem sensor			SFF subsystem sensor	Max. attainable SIL
	Sensor output	Sensor type according to EN 61508	HFT according to EN 61508		
Standstill, SLS, SSR, SSM (no rotational direction)	Push-pull	Type B	1	> 60 %	SIL 2
Standstill, SLS, SSR, SSM (with rotational direction) SDI and SLP	Push-pull	Type B	1	> 60 %	SIL 2

4.5.2.7 Standard HTL encoder with antivalent signals A, A/, B, B/

- Available safety functions include:
  - Standstill monitoring (standstill)
  - Speed monitoring with/without direction (SLS, SSR, SSM)
  - Safe direction (SDI)
  - Position monitoring (SLP)
- Incremental encoders with 2 tracks and antivalent signals
- Example: Incremental encoder with functional safety and digital rectangular output signals (output level HTL logic)
- Electric version: Push-pull, HTL
- Incremental encoder delivers two output signals A and B as well as two antivalent signals A/ and B/.
- Rotational direction recognition is possible by shifting the phase between A and B.
- Cable break detection possible on sensors with push-pull output.

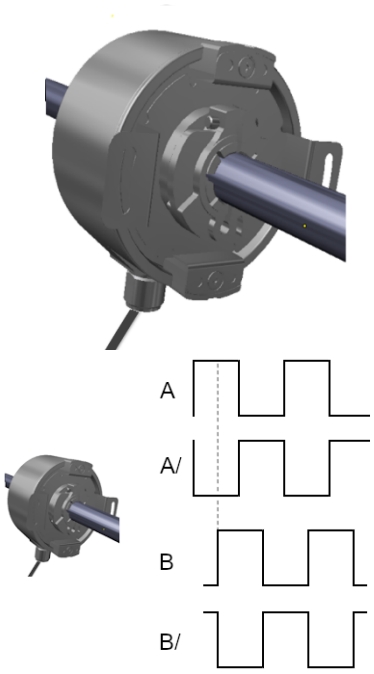

4.5.2.7.1 Characteristics when using a 4-track incremental encoder

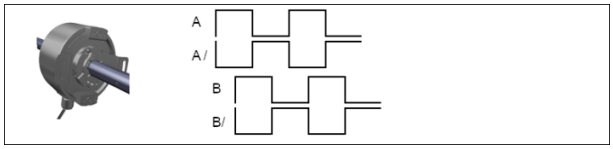

Safety characteristics according to EN ISO 13849

Safety function	Requirements for subsystem sensor			DC subsystem sensor	Max. attainable PL
	Sensor output	$MTTF_D$	Category		
Standstill, SLS, SSR, SSM (no rotational direction)	Push-pull	See Manufacturer	B	None	b
Standstill, SLS, SSR, SSM (with rotational direction) SDI and SLP	Push-pull	See Manufacturer	B	None	b

Safety characteristics according to EN 61508

Safety function	Requirements for subsystem sensor			SFF subsystem sensor	Max. attainable SIL
	Sensor output	Sensor type according to EN 61508	HFT according to EN 61508		
Standstill, SLS, SSR, SSM (no rotational direction)	Push-pull	Type B	0	90 %	SIL 2
Standstill, SLS, SSR, SSM (with rotational direction) SDI and SLP	Push-pull	Type B	0	90 %	SIL 2

4.6 Safety outputs

WARNING

Safety-based devices must be suitable for safety-relevant signals!

An interruption in the function of safety outputs will lead to a loss of safety functions, which means that there will be a risk of severe injury.

- Do not connect any loads that exceed the rated values of the safety outputs.
- Wire the MSI 400 system such that no 24 V DC signals can unintentionally make contact with the safety outputs.
- Connect the GND lines of the power supply to ground so that the devices do not switch on when the safety output line is at ground potential.
- Use suitable components or devices that fulfill the applicable guidelines and standards.
- Actuators can be wired at the output as single-channel. To ensure compliance with the appropriate safety integrity levels, the cables must be routed in such a way that cross-connections to other signals are excluded, e.g. by routing them within protected areas, e.g. switch boxes, or with separate, shielded cables.

5 Special functions

5.1 Muting

Muting is the automatic temporary bypassing of all safety-based functions of the control system or of the safety equipment. Muting is used when certain objects, e.g. pallets with material, may be moved into the hazardous area. During this transport, the muting function suppresses monitoring by the contactless safety device (BWS), e.g. a safety light curtain.

For further information, observe the information in the software manual in the following chapter:
Function blocks for 4-Sensor muting (time-controlled), 4-Sensor muting (sequential), and 2-Sensor muting (time-controlled, with/without direction detection)

6 Installing/removing

This section describes the installation of modules for the MSI 400 safety control.

6.1 Installing modules on hat rail

WARNING	
	This is only for switch boxes with protection class IP 54 or higher! The MSI 400 system is only suitable for installations in a switchbox having at least protection class IP 54.

Notes

- Basic safety
  Gateways and extension modules may not be removed or added when the operating voltage is switched on.
- Grounding
  The hat rail must be conductively connected to the protective conductor (PE).
- ESD protection measures
  Note the suitable ESD protection measures during installation.
  Failure to do so could result in damage to the internal safety bus.
- Protect connector openings
  Undertake suitable measures so that no foreign bodies can penetrate connector openings, particularly those for the program removable storage.
- Module width:
  The modules are placed in a mounting box that is 22.5 mm or 45 mm wide depending on type.
- Quality of hat rail
  The mounting boxes are suitable for 35 mm hat rails as per EN 60715.
- Sequence of modules:
  The MSI 400 system has the controller module on the far left. The two optional gateways follow directly to the right next to the controller module. The expansion modules only follow thereafter.
- Save space for subsequent model replacement
  The modules are connected via the plug connection integrated into the housing. Note that the MSI 400 modules must be pulled about 10 mm apart before a module replacement so that the corresponding module can be removed from the hat rail.
- Standards to be considered
  Installation according to EN 50274

Step 1: Installing a controller module

↳ Using a screwdriver, pull the snap-on foot outward.

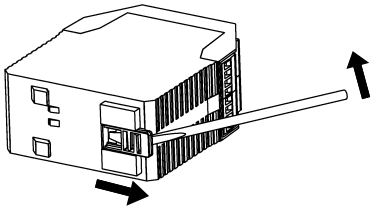

↳ Hang the module on the hat rail.
Important! Make sure that the shielding spring fits correctly.
The shielding spring of the module must be placed onto the hat rail so that it is secure and has good electrical contact.

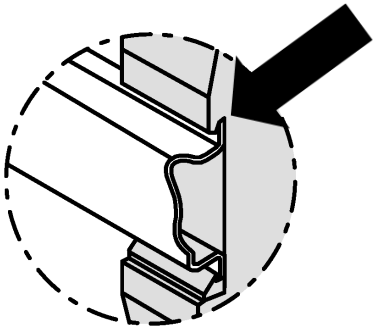

↳ Fold the module onto the hat rail.

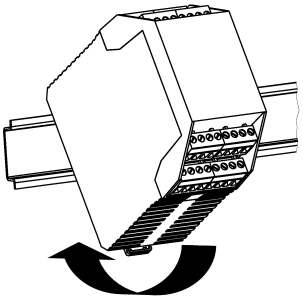

↳ Using a screwdriver, move the snap-on foot against the hat rail until the snap-on foot latches into position with an audible click.

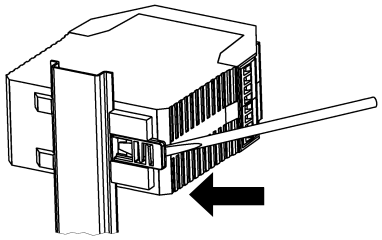

↳ Make sure that the module is securely seated on the hat rail.
Attempt to pull the module from the hat rail using slight pressure. If the module stays connected to the hat rail during this test, then the installation is correct.

Step 2: Installation of gateways or expansion modules

- Using a screwdriver, pull the snap-on foot outward.

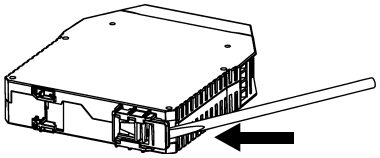

- Hang the module on the hat rail.
  Important! Make sure that the shielding spring fits correctly.
  The shielding spring of the module must be placed onto the hat rail so that it is secure and has good electrical contact.

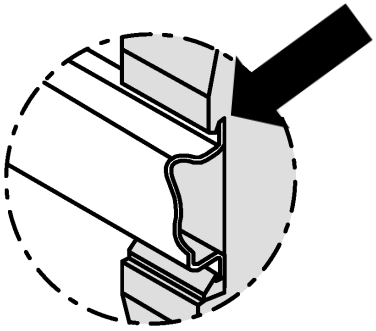

- Fold the module onto the hat rail.

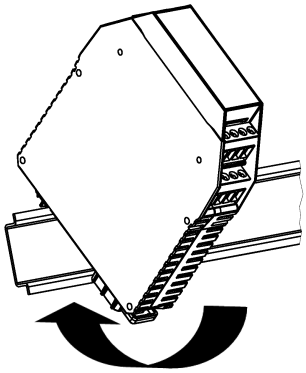

- Using a screwdriver, move the snap-on foot against the hat rail until the snap-on foot latches into position with an audible click.

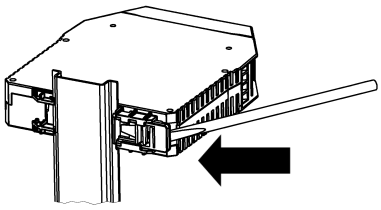

- Make sure that the module is securely seated on the hat rail.
  Attempt to pull the module from the hat rail using slight pressure. If the module stays connected to the hat rail during this test, then the installation is correct.
- If you are installing multiple modules:
  Push the individual modules together in the direction of the arrow until the lateral plug connection between the modules audibly latches into position.

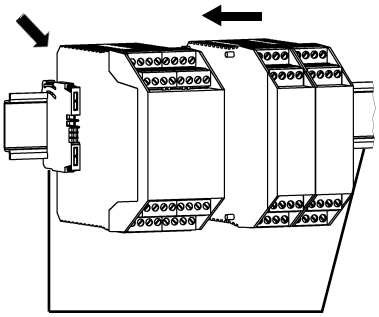

Install an end terminal into the module furthest to the left and another end terminal into the module furthest to the right.

After installation

Once you have installed the modules, the following steps are required:

- *Connect the modules electrically. [chapter 4]*
- Configure modules (see: software manual).
- *Check the installation before first commissioning. [chapter 9.2]*

6.2 Removing modules from the hat rail

Step 1: Removing a controller module

- Deenergize the MSI 400 system.
- Remove plug-in terminals with wiring and remove the end terminal.

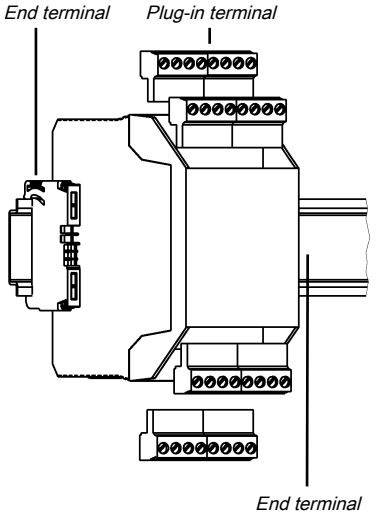

- If expansion modules or gateways are used:
  Slide the controller module in the direction of the arrow until the lateral plug connection is disconnected.

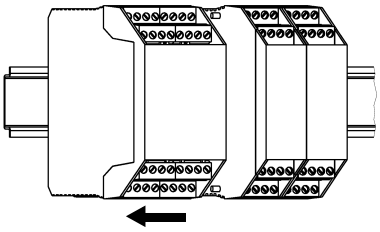

- Unlock the module.
  To do this, pull the snap-on foot of the module outward using a screwdriver.

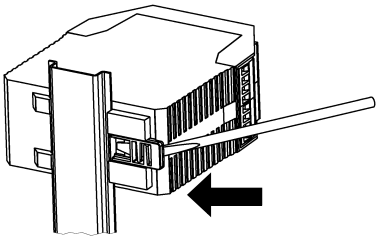

- Fold the module away from the hat rail and remove it from the rail.

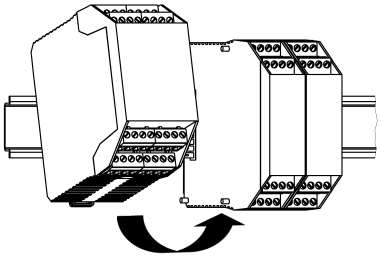

Step 2: Removing gateways and expansion modules

- Deenergize the MSI 400 system.
- Remove any plug-in terminals with wiring and remove the end terminals.

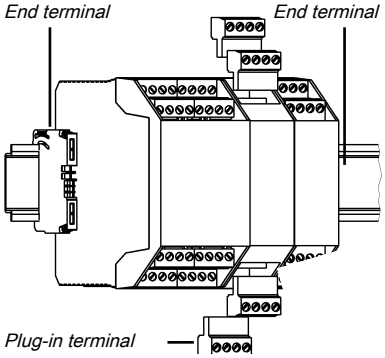

↳ Pull the modules apart from one another individually in the direction of the arrow until the lateral plug connection is disconnected.

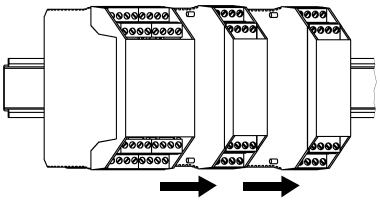

↳ Unlock the module.
To do this, pull the snap-on foot of the module outward using a screwdriver.

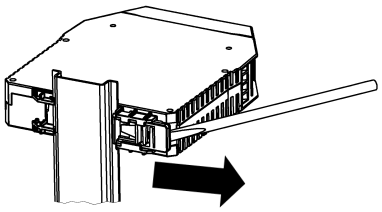

↳ Fold the module away from the hat rail and remove it from the rail.

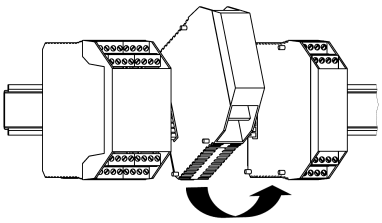

7 Electrical installation

7.1 Requirements for electrical installation

This section describes the electrical installation of the MSI 400 system in the switchbox. You can find additional information on the electrical connection of other devices to the MSI 400 system in the section on the respective device (see *Product description [chapter 2.5.2]*).

Safety information

WARNING

Switch off power to the entire system/machine!

It is possible for the system to be unintentionally started while you are connecting the devices.

WARNING

Note the corresponding safety standards!

All of the safety-related parts of the system (wiring, connected sensors and command encoders, configuration, device monitoring) must meet the respective standards (e.g. EN 62061 or EN ISO 13 849-1). This can mean that the safety-related signals must be designed redundantly or that single-channel signals must be routed in a protected manner, or that short-circuit detection will be required through the use of test outputs and/or regular function tests.

- Note that short-circuit between test outputs and the corresponding input cannot be detected.
- Consider whether a shielded cable or separate line routing will be required for these signals.
- In the event of a short-circuit to 24 V at an output, it will no longer be possible to switch off the output.
- Reverse current to a switched-off output of an MSI-EM-IO84 cannot be prevented and will influence the ability to switch off the outputs.

WARNING

Limited short-circuit detection in the input circuits

- One MSI 4xx has four test signal generators T1 – T4.
- One MSI-EM-I8 module has two test signal generators. One test signal generator is responsible for the odd-numbered test outputs (X1, X3, X5, and X7), while the other is responsible for the even-numbered test outputs (X2, X4, X6, and X8).
- Short-circuits between test signal generators of a MSI-EM-I8 or MSI-EM-IO84 module are detected. Between different modules, the short circuit detection is then only ensured if the test gaps of the test signal generators are < 4 ms, the test periods ≥ 200 ms and no more than 9 modules (MSI-EM-I8 / MSI-EM-IO84) have been plugged in. Short-circuits after 24 V DC (after High) at inputs that are connected to test outputs are detected independently of the length of the test gaps.
- Please ensure that the odd-numbered test outputs (X1, X3, X5, and X7) at an MSI-EM-I8 are connected to a common test signal generator and that the even-numbered test outputs (X2, X4, X6, and X8) are connected to another common test signal generator. Therefore, short-circuits between the odd-numbered test outputs (X1, X3, X5, and X7) cannot be detected. The same applies accordingly to the even-numbered test outputs X2, X4, X6, and X8. **Make note of this during wiring (e.g. through separate routing or protected lines)!**

WARNING

Reverse current at inputs of MSI 4xx, MSI-EM-IO84 or MSI-EM-I8 with breakdown of ground!

In the event of an internal or external ground breakdown, reverse current can flow from the supply voltage of the COMPACT module (terminal A2) to the safe inputs of the MSI 4xx, MSI-EM-IO84 or MSI-EM-I8 modules. Make note of this if other inputs are connected in parallel to these inputs so that this reverse current does not lead to an unintentional high at the inputs connected in parallel.

Additional information

- The MSI 400 safety control fulfills the EMC provisions in accordance with basic technical standard EN 61000--6--2 for the industrial sector.
- Industrial safety devices from Leuze electronic are only suitable for local direct-current applications. If the device is to be used in supply voltage networks, e.g. in accordance with IEC 61326-3-1, then additional safety measures must be implemented.
- Machines on which safety devices will be used must be installed and configured in accordance with the Lightning Protection Zone (LPZ) as per EN 62305-1. The required resistance level can be achieved by using external safety devices. The Surge Protection Devices (SPD) used must fulfill requirements in accordance with EN 61643-11.
- The system must prevent "Common Mode" malfunctions in a frequency range of 0 Hz to 150 kHz in accordance with IEC 61000-4-16.
- In order to ensure complete EMC safety, the hat rail must be connected to functional earth (FE).
- The MSI 400 system must be installed in a switchbox with at least protection class IP 54.
- Carry out the electrical installation in accordance with EN 60204-1.
- The power supply of the devices must able to bridge a short-term power outage of 20 ms in accordance with EN 60204-1.
- The power supply must meet the regulations for low-voltage with safe disconnection (SELV, PELV) in accordance with EN 60664 and EN 50178 (equipping high-voltage systems with electronic equipment).
- You must connect all modules in the MSI 400 system, the connected safety equipment and the voltage supplies to the same 0-V DC connection (GND).
- Avoid using ground loops between the USB interface GND and the A2 connection of the controller module, e.g. by using optocouplers.
- Depending on external loads, particularly with inductive loads, it may be necessary to use additional external protective measures such as varistors or RC elements in order to protect the safety outputs. There are limits for the operation (see *Technical data [chapter 12]*). Note that the response times may be delayed depending on the type of protective circuit.
- If a module is replaced, the correct plug-in block terminal arrangement must be ensured, e.g. through labeling or corresponding cable routing.
- If it is possible for someone to access the protective equipment from the rear (e.g. a safety light curtain), then install the reset button such that it cannot be activated by a someone who is in the hazardous area. In addition, the operator must have a complete overview of the hazardous area when operating the reset button.

7.2 Internal wiring of the supply voltage

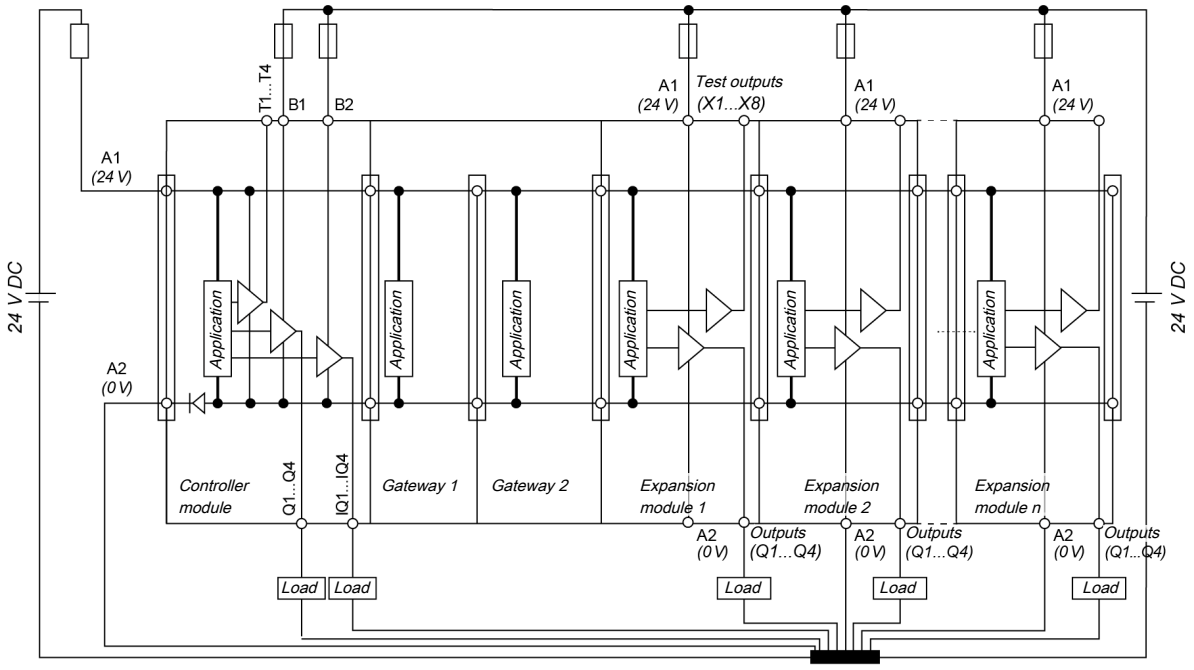

Fig. 7.1: Internal wiring of the MSI 400 supply voltage

8 Configuration

WARNING	
	Check the protective function before commissioning and after any change! If you change the configuration, you must check the effectiveness of the protective function. To this end, note the test instructions in the operating instructions for the connected safety equipment.

Additional information

For configuring the MSI 400 system, you will require the MSI.designer software and the MSI-SD-CARD program removable storage.

The configuration and verification of devices that are connected to the safety control generally does not take place using the MSI.designer software. These devices have their own mechanisms for configuration and verification.

- The system configuration of the entire MSI 400 system is stored in the program removable storage. This has the advantage that the system does not have to be reconfigured when modules and/or gateways are replaced.
- The data stored in the program removable storage will be retained even if the supply voltage is interrupted.
- It is possible to transfer configuration information via the USB or Ethernet interface.

9 Commissioning

WARNING	
	Commissioning cannot take place without testing being conducted by a qualified person! ↳ Before you place the system in which you use a MSI 400 safety control in operation for the first time, it must be tested and documented for release by a qualified person.

WARNING	
	Monitor the hazardous area! ↳ Before commissioning, make sure that no one is inside the hazardous area. ↳ Check the hazardous area and secure it against access by unauthorized people (e.g. place warning notices, set up blocks, etc.). Note the corresponding laws and local regulations.

9.1 Total acceptance of the application

You may only place the system into operation if the total acceptance inspection was passed successfully. The total acceptance inspection may only be done by appropriately trained personnel.

The total acceptance comprises the following test points:

Procedure

- ↳ Check whether all of the safety-related parts of the system (wiring, connected sensors and command encoders, configuration) meet the respective standards (e.g. EN 62061 or EN ISO 13 13849-1).
- ↳ Test the devices connected to the safety control in accordance with the test information in the corresponding operating instructions.
- ↳ Mark all of the connections (connection lines and plug connectors) on the safety control clearly and uniquely to prevent mixups. Because the MSI 400 system has multiple connections with the same shape, make sure that connection lines or connectors that are disconnected are not unintentionally connected back to the wrong connection.
- ↳ Check the signal paths and the correct integration into higher-level controls.
- ↳ Check the correct data transmission from and to the MSI 400 safety control.
- ↳ Check the logic program of the safety control.
- ↳ Carry out a complete validation of the safety functions of the system in each operating mode and an error simulation. Note in particular the response times of the individual applications.
- ↳ Fully document the configuration of the system, the individual devices, and the results of the safety check.

9.2 Tests before initial commissioning

The tests before initial commissioning are used to confirm the safety requirements required in the national/international guidelines, particularly the Machinery or Work Equipment Directive (EC conformity).

Procedure

- ↳ Test the effectiveness of the safety equipment on the machine in all operating modes and functions that can be set on the machine.
- ↳ Make sure that operating personnel who will be working with the machine protected by the safety control are trained by qualified people from the machine operator before starting work. The machine operator is responsible for the training.

10 Diagnostics

10.1 What to do in the event of an error

WARNING
Do not operate the system in the event of an unclear error! ↳ Place the machine out of operation if you cannot clearly assign an error or eliminate it safely.

WARNING
Carry out a complete function test after eliminating the error. ↳ Carry out a complete function test when you have eliminated an error.

10.2 Error statuses

With certain error functions or a faulty configuration, the MSI 400 safety control will go into a safe state. The LEDs of the individual modules of the safety control show the appropriate error type.

There are various error levels depending on the type of error:

Configuration error

- The system is in the *Configuration required* state and the MS LED flashes red with 1 Hz.
- Applications in all modules are in the Stop operating state.
- All safety outputs of the system are switched off.
- All safe process data are set at zero. Typically, the non-safety-related process data are also set at zero.

Repairable errors

- The applications in all the modules remain in the Run operating state. The MS LED of the affected modules flashes alternately in red/green with 1 Hz. The MS LED of the unaffected modules turns green.
- If safety outputs are affected, then these safety outputs of the system will be switched off at a minimum.
- If safe inputs are affected, then the process data of these safe inputs at a minimum will be set at zero.

Critical error

- The system is in the *Critical error* state and the MS LED of the module that has detected the critical error flashes red with 2 Hz. The MS LED of the modules at which the error cause is unknown will be lit in red.
- Applications in all modules are in the Stop operating state.
- All safety outputs of the system are switched off.
- All safe process data are set at zero. Typically, the non-safety-related process data are also set at zero.

How to place the device back in operation:

↳ Eliminate the cause of the error in accordance with the displays of the MS and PWR/EC LEDs.

↳ With critical errors, after troubleshooting, switch off the power supply of the MSI 400 system for at least 3 seconds and then switch it on again.

10.3 Error displays of the status LEDs

This section explains the meanings of the status LEDs.

A more detailed error diagnosis is possible via the error messages can be seen in the **Diagnostics** of MSI.designer.

	NOTICE
	↳ You can find information on how to carry out diagnostics in the software manual, "Diagnostics" view ↳ You can find a list of all the error messages in this document under *List of all error messages, causes and aids [chapter 14.3]* This section lists the most important error codes, possible causes and troubleshooting measures.

10.3.1 Device state and LED displays in the controller modules

Flash code meaning

Tab. 10.1: Key

Symbol	Meaning
○	LED off
✳	LED flashing
●	LED lights up

Reference

Tab. 10.2: Device state and LED displays in the controller modules

PWR/EC LED	Meaning	Additional info
✳ Red flashing	An error has occurred in the control. All 24V outputs have been switched off. The control must be restarted with a power ON reset after the cause of the error has been eliminated. The number of flash pulses indicates the error class to which the occurring error belongs.	Number of flashing pulses = error class 2: Configuration data 3: Application 4: Self-test 5: Voltage/current monitoring 6: I/O modules 7: Cross-communication 8: Internal
✳ Green flashing (1 Hz)	The supply voltage at A1, B1, or B2 is outside of the range of 16.8 V to 30 V.	
● Green	The supply voltage at A1, B1, and B2 is within the range of 16.8 V to 30 V.	

MS LED module state	State	Additional info
✳ Red flashing (1 Hz)	There is no project at the control or the project data is faulty (because, e.g., the number of inserted I/O modules does not match the project).	No or incorrect module configuration
✳ Green flashing (1 Hz)	Project data was adopted from control and I/O modules, control waiting for start command	
● Green	Control has started.	
✳ / ✳ Red/green flashing	One or more inputs have a cable break or short-circuit to 24V. Or there is a sequence/synchronization time error at a dual channel input. Or an output has a test error (e.g. short-circuit).	

Code-verified CV LED	Control behavior
Yellow flashing (1 Hz)	The project at the control has not been verified. The control will not start automatically after power ON reset.
Yellow	The project at the control has been verified. The control will start automatically after power ON reset.

NET	Meaning
Flashing green (for 3 s)	Connection setup with control

Input LED	Meaning	Additional info
Green flashing (1 Hz)	A single-channel input has a test error (cable break or short-circuit at 24 V) or the input was not configured in the project and 24 V is pending.	Applies to I1 to I16 and IQ1 to IQ4 if single-channel has been configured. Flashes synchronously with MS LED in red.
Green flashing, alternating (1 Hz)	Dual channel input has synchronization time error or a sequence error or at least one of the two inputs has a test error (cable break or short-circuit at 24 V)	Applies to I1 to I16 and IQ1 to IQ4 if dual channel has been configured. Input pair flashing on and off.
Off	Signal level at the input terminal is 0 V.	
Green	Signal level at the input terminal is 24 V.	

Output LED	Meaning	Additional info
Green flashing (1 Hz)	Output has a test error.	Applies to Q1..Q4 and IQ1..IQ4
Off	Output is switched off.	
Green	Output is switched off.	

10.3.2 Device state and LED displays in the safe input/output modules

NOTICE

The displays of the MS LED and the input LEDs I1 to I8 are identical to those for the MSI-EM-IO84 and MSI-EM-I8 expansion modules.

Tab. 10.3: Displays of the MS LED

MS LED	Meaning	Info
○	Supply voltage outside of operating range	Check supply voltage at terminals A1 and A2.
✳ / ✳ Red/green flashing (1 Hz)	Repairable external error	Check cable of flashing inputs and outputs. If all output LEDs are flashing, check the supply voltage of terminal A1 and A2 for this module.
✳ Green flashing (1 Hz)	System is in the stop state or the voltage supply to A1 is outside the range of 16.8 V to 30 V.	Start the application in MSI.designer. Check voltage supply to A1.
● Green	System in the run state and the voltage supply to A1 is within the range of 16.8V to 30V.	
✳ Red flashing (1 Hz)	Invalid configuration	
✳ Red flashing (2 Hz)	Critical error in the system; suspected in this module. Application has been stopped. All outputs are switched off.	Switch supply voltage off and back on. If the error has not been eliminated after this has been done multiple times, then replace module. In order to contain the module affected, use the diagnostics display in MSI.designer.
● Red	Critical error in the system; suspected in a different module. Application has been stopped. All outputs are switched off.	Switch supply voltage off and back on. If the error has not been eliminated after this has been done multiple times, then replace module in which the red LED is flashing (2 Hz). In order to contain the module affected, use the diagnostics display in MSI.designer.

Tab. 10.4: Displays of input LEDs

Input LEDs (I1–I8)	Meaning
○	Signal level at the input terminal is 0 V. Safety mat: Both inputs actuated.
● Green	Signal level at the input terminal is 24 V.
✳ Green (1 Hz) Synchronous with the red MS LED	Signal level at the input terminal is 0V and a repairable error at a dual channel input is pending.
✳ Green (1 Hz) Alternating with the red MS LED	Signal level at the input is 24 V and a repairable error is pending.

Tab. 10.5: Displays of output LEDs

Output LEDs (Q1–Q4)	Meaning
✳ Green (1 Hz) Synchronous with the red MS LED	Output has a test error.
○	Output is switched off.
● Green (1 Hz)	Output is switched off.

10.3.3 Device state and LED displays in the standard input/output modules

Tab. 10.6: Displays of the MS LED

MS LED	Meaning	Info
○	Supply voltage outside of operating range	Check supply voltage at terminals A1 and A2.
✳ / ✳ Red flashing (1 Hz)	Repairable external error	Check cable of flashing inputs and outputs. If all output LEDs are flashing, check the supply voltage of terminal A1 and A2 for this module.
✳ Green flashing (1 Hz)	System in the stop state and waits for start command or the voltage supply to A1 / A2 is outside the range of 16.8V to 30V.	Start the application in MSI.designer. Check voltage supply to A1.
● Green	System in the run state and the voltage supply to A1 is within the range of 16.8V to 30V.	
✳ Red flashing (1 Hz)	Invalid configuration	

MS LED	Meaning	Info
Red flashing (2 Hz)	Critical error (type 3) in the system; suspected in this module. Application has been stopped.	Switch supply voltage off and back on. If the error has not been eliminated after this has been done multiple times, then replace module. In order to contain the module affected, use the diagnostics display in MSI.designer.
Red	Critical error in the system; suspected in a different module. Application has been stopped.	Switch supply voltage off and back on. If the error has not been eliminated after this has been done multiple times, then replace module in which the red LED is flashing (2 Hz). In order to contain the module affected, use the diagnostics display in MSI.designer.

Tab. 10.7: Displays of input LEDs

Input LEDs (I1–I4 and IY5-IY8)	Meaning
	Signal level at the input terminal is 0 V. Inputs actuated.
Green	Signal level at the input terminal is 24V. Input is not actuated.

Tab. 10.8: Displays of output LEDs

Output LEDs (Y1-Y4 and IY5-IY8)	Meaning
	Output is switched off.
Green	Output is switched off.
Green (1 Hz) synchronous with the red MS LED	Output has an error. (e.g. output driver overloaded)

10.4 Support

If you cannot eliminate an error with the help information contained in this section, then please contact the Leuze branch responsible for your area.

	NOTICE
	If you send in a program removable storage for repair or analysis, you will receive it back in delivery condition (factory settings). Therefore, be sure to store the configuration(s) of your devices in the MSI.designer.

10.5 Expanded diagnostics

MSI.designer contains expanded diagnostics options. The software enables you to further contain the problem if you have an unclear picture of the situation or availability issues.

Please see the following for more detailed information:

- Software manual
- A complete list of all error messages is contained in the *Appendix [chapter 14.3]*.

11 Maintenance

The following section provides information on regular tests and the replacement of MSI 400 modules.

Do not attempt to remove, repair, or modify the MSI 400 modules. This may lead to loss of safety functions. Furthermore, this will void any warranty claim you may have against Leuze electronic GmbH.

11.1 Regular testing of the safety equipment by qualified persons

- Test the system according to national valid regulations within the required time frames. This is necessary in order to discover any changes in the machine or manipulations to the safety equipment after initial commissioning.
- Every security application must be tested within a time interval specified by you. The effectiveness of the safety equipment must be tested by trained and qualified persons.
- If changes are performed on the machine or safety equipment or the safety control is refitted or repaired, then check the system again according to the checklist in the Appendix.
- Carry out regular or daily inspections in order to keep the MSI 400 modules in optimum operating condition.
- Check whether the implementation of the MSI 400 modules contains all of the technical data for the device.
- Check the installation conditions and whether the wiring of the MSI 400 modules has been completed correctly.
- Conduct regular verifications to ensure that the safety functions fulfill the requirements of the application and all regulations and standards (e.g. regular testing) in order to ensure the reliability of the safety functions.

11.2 Replacing devices

A critical error in one of the MSI 400 modules will affect the entire network. Therefore, devices that have critical errors must be quickly repaired or replaced. We recommend keeping replacement MSI 400 module devices at the ready so that you can reestablish network operation as quickly as possible.

11.2.1 Safety measures when replacing devices

Follow the following safety measures when replacing MSI 400 modules:

- Do not attempt to dismantle or repair the MSI 400 modules. This not only will void warranty claims against Leuze electronic, but it is also dangerous, because in this case it is not possible to test the original safety functions.
- Place the device back into a condition in which the safety will be ensured.
- Only carry out replacement when the power supply is switched off in order to prevent electric shock or unexpected behavior from the device.
- In order to enable further use of the system configuration, check the following:
  - Is the new module of the same type (same material number) and is the new module error-free after replacement?
  - Was the new module inserted into the same position at which the replaced module was?
  - Were all plug connections connected back at the correct location?
- If not, you will need to completely reconfigure the new system and commission it including all of the necessary tests (see *Commissioning [chapter 9]*).

	NOTICE
	↳ After replacement, make sure that no errors are occurring with the new MSI 400 modules. ↳ Be sure to carry out a function test before commissioning a replacement module. ↳ When you send in MSI 400 modules for repair, generate a report of your project in MSI.designer and carry out diagnostics; enclose a detailed description of the problem with the device, and send the MSI 400 modules along with all available information to Leuze electronic.

12 Technical data

12.1 System response times

The response time is the time that is required to activate the safety function.

Example: The time from which the safety light barrier is crossed until the machine stops.

In order to determine the response time of the MSI 400system, use the standard time plus the filter and test times.

Factor 1: Standard time

Maximum ON-OFF time from input to output without filter and test times:

Tab. 12.1: Calculating the time values

Input MSI 4xx	Input MSI-EM-IO84 / MSI-EM-I8	
2 x cycle time + 3.6 ms	2 x cycle time + 7.2 ms	Output MSI 4xx
11.8 ms	--	FSO MSI 4xx
2 x cycle time + 6.9 ms	2 x cycle time + 10.6 ms	Output MSI-EM-IO84
--	8.6 ms	FSO MSI-EM-IO84

- The cycle time must be obtained from MSI.designer (lower right).
- FSO = Fast Shut-Off: This function can be used to achieve quicker switch-off times from input to output inside the module. FSO is a functional component in the MSI.designer.

Factor 2: Filter time

When the ON-OFF filter is activated, the switch-off signal is delayed by the filter time set. This filter can be activated for each input in the MSI.designer and acts upon the response time with + 8 ms.

Factor 3: Test times

If the input tests are carried out in single-channel input circuits with the assistance of tests outputs T1 to T4 or X1 to X8, this results in the response time for test times > 1 ms from the test time plus response time (wait time until the test pulse occurs).

Tab. 12.2: Response times

MSI 4xx	MSI-EM-I8 / MSI-EM-IO84
12 ms	With the test pulse time set to 4ms ≤ t_p ≤ 12 ms: 8 ms
	With the test pulse time set to t_p > 12 ms: 12 ms

When using user-defined elements (software manual) the response time can also be extended in two-channel input circuits if the selected test time is greater than 0.5 * test period minus 12 ms. The resulting additional response time should be calculated as follows:
additional response time = test time + 12 ms - 0.5 * test period
(Only a positive result is evaluated, negative values are equal to zero)

For applications with a safety mat, the test period of the test generators connected must be applied to the response time. The following table provides the reaction times for the correspondingly set test periods.

WARNING	
	Changed reaction times! From build state D-03.01 of the MSI 4xx modules and B-08 of the MSI-EM-IO84 modules, the longer response times given in the table below apply. In particular, for existing projects with sensor elements for safety mats and bumpers, this extension of the response times must be adhered to (e.g. in the case of replacement of a MSI 4xx module).

Tab. 12.3: Test periods and response times

Test periods for both test outputs (ms)[1]		Resulting additional response time (ms)	
Test output 1	**Test output 2**	**MSI-EM-IO84 (to B-07)** **MSI 4xx (to D-01.xx)**	**MSI-EM-IO84 (from B-08)** **MSI 4xx (from D-03.xx)**
40	40	20	40
40	200-1000	40	80
200	200	100	200
200	400-1000	200	400
400	400	300	400
400	600 800-1000	400 400	600 800
600	600	500	600
600	800 1000	600	800 1000
800	800	700	800
800	1000	800	1000
1000	1000	900	1000
[1] Obtain the values from the report in MSI.designer.			

Example

The following examples shows the determination of the response time of a safety function (sensor – logical function – actuator).

Tab. 12.4: Response time of a safety function

Sub-function	Time	Remarks
Response time of the sensor	+ 18.0 ms	Manufacturer information
Test time for testable sensors, e.g. Type 2 contactless safety devices With testable sensors, the response time increases by the active test gap + 12 ms. Thus, with a test gap of 4 ms, there is an additional response time of 4 ms + 12 ms = 16 ms	+ 16.0 ms	Test generators T1 to T4 or X1 to X8
Filter time When the ON-OFF filter is active, + 8 ms	0.0 ms	MSI.designer
Standard time Controller module input to controller module output With a cycle time of 4 ms.	+ 11.6 ms	See table: "Standard time"
Logics for switch-off delay times If function blocks with switch-off delay are used in the logic plan, then these times have to be added to the response time.	0.0 ms	MSI.designer
Actuator response time	+ 35.0 ms	Manufacturer information
Total time	**80.6 ms**	

12.1.1 Minimum switch-off time

The minimum switch-off time (e.g. of connected sensors) is the minimum time during which a switch-off condition must be present in order to be detected so that error-free switching is possible. The minimum switch-off time must be

- greater than the logic execution time and
- greater than the test gap + the maximum OFF/ON delay when the input is connected at test output X1–X8 and the test gap is > 1 ms, and
- greater than the test period + the maximum OFF/ON delay when safety mats or safety edges are being used.

12.1.2 Response time of the state flag

If an error is detected, the status data will be available in the **Logic** view of MSI.designer in the next logic cycle. The time to detection of a status error depends, among other things, on the duration of the test period and can be up to 1 s.

12.1.3 Default values for non-secure or secure data

Data from gateways or the non-secure MSI-EM-IO84NP I/O expansion module are categorically not secure. Default values are taken up in the error state of the controller. The default value of IO data is 0 and the default value of state data is 1.

12.2 Response times for motion monitoring

Response time of a safety function

The user must verify the response time of each safety function t_{SF}. This depends on the safety response times t_{SR} and the error reaction times t_{Error} of all components involved. The t_{SR} of a component describes the maximum response time of the component without an error in the component or failure occurring. The error reaction time t_{Error} is used to describe the maximum error detection time.

Several components (e.g. sensor, logic and actuator) are usually used for a safety function.

* t_{SR_Sensor}	=	Safety response time of input or sensor
* t_{SR_Logic}	=	Safety response time of the logic or MSI 400
		Further information: *Safety response times of the logic [chapter 12.2.1]*
* $t_{SR_Actuator}$	=	Safety response time of the actuator
* t_{Error_Sensor}	=	Error detection time of sensor
* t_{Error_Logic}	=	Error detection time of the logic or MSI 400
		Further information: *Error detection times [chapter 12.2.2]*
* $t_{Error_Actuator}$	=	Error detection time of the actuator

$$t_{SF} = t_{SR_Sensor} + t_{SR_Logic} + t_{SR_Actuator} + t_{Error}$$

If 1 motion monitoring sensor is used for the safety function, the following applies:

$$t_{Error} = \max\left((t_{Error_Sensor} - t_{SR_Sensor}), (t_{Error_Logic} - t_{SR_Logic}), (t_{Error_Actuator} - t_{SR_Actuator}) \right)$$

If 2 motion monitoring sensors are used for the safety function, the following applies:

$$t_{Error} = \max\left((t_{Error_Sensor} - t_{SR_Sensor}), 0, (t_{Error_Actuator} - t_{SR_Actuator}) \right)$$

Only the logic and MSI 400 are considered in detail in the following.

12.2.1 Safety response times of the logic

The response time to a change in speed is essentially defined by the preset measuring interval. Set a short measuring interval to achieve a faster response.

However, short measuring intervals lead to a lower measuring accuracy, as the number of evaluated periods of a signal goes down. For this reason, use high-resolution rotary encoders if you want a rapid reaction to changing motion dynamics.

The higher the detected input frequency, the shorter the measuring interval can be, which will result in a shorter response time to changes in speed.

The response time is defined by the activation or deactivation of the release due to a speed a minimum of 1 measuring interval above or below the limit.

Important: Highly dynamic speed changes that occur within a measuring interval may leave the release unchanged. This happens if the sum of measured signal periods at the end of the measuring interval is not sufficient to activate or deactivate the release.

Tip: Calculate the response time from 2 measuring intervals plus the internal system runtime. You can find this in the technical data in the Hardware manual (50134711).

The safety response time t_{SR} for motion monitoring depends on:

- The configured measuring interval t_{Meas}
  Additional information: Measuring interval and speed measurement
- The CPU cycle time t_{Cycle}
  Additional information: Overview of window layout
- The tolerance time $t_{Tolerance}$
  Additional information: Comparison functions in function blocks
- The transmission time to an optional SDIO module via S-bus t_{Bus} = 4 ms

It is calculated as follows:

$t_{SR_Logic} = 2 \max (t_{Meas,}\ t_{Cycle}) + 4ms + t_{Tolerance} + t_{Bus}$

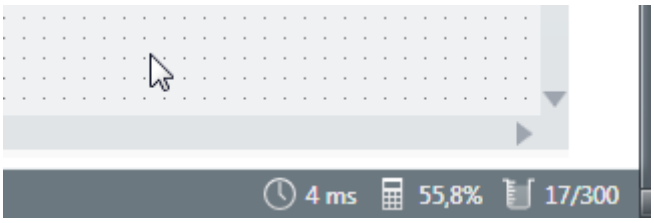

You only need to take the tolerance time $t_{Tolerance}$ into account

- If a speed comparison (optionally according to the rotation direction) was configured between the two sensor inputs of a functional component (e.g. SSR)

  or

- If a rotation direction comparison was configured between the two sensor inputs of a functional component (e.g. SDI).

The measuring interval t_{Meas} on the functional component SDI is zero.

12.2.2 Error detection times

The error detection time t_{Error} for motion monitoring depends on:

CPU cycle time	t_{Cycle}
SBus transmission	t_{Bus} = 4 ms optional

It is calculated as follows:

$t_{Error_Logic} = 2 * t_{Cycle} + 28\ ms + t_{Bus}$

NOTICE	
	The time response of the control and therefore the error detection depends on the application-specific cycle time of the MSI 400 controller and therefore the programmed safety functions.

The expected cycle time in the individually configured system is displayed in MSI.designer at the bottom right. This cycle time must be used to check the attainable safety level.

WARNING	
	For single-channel systems, the error detection time must be less than the Process Safety Time (PST). You can verify this by making a calculation using the values of the cycle time ascertained by MSI.designer for your application.

WARNING	
	If 2 sensors are used for each safety function, the safety response time t_{SR} must be less than the Process Safety Time (PST). You can verify this by making a calculation using the values of the cycle time ascertained by MSI.designer, as well as all the measuring intervals configured for the functional components of your application.

12.3 Safety technology reference values

NOTICE	
	The manufacturer or designer is responsible for the risk analysis and assessment as well as for designing the technical safety parts of the control correctly. This also includes calculating the Performance Level or SIL values for the selected safety functions. Of course, you can always contact Leuze electronic to benefit from a professional risk analysis and risk assessment service. Information on the characteristic values for motion monitoring: *Determining the attainable safety level [chapter 4.5.2.1.1]*

12.3.1 Controller modules without I/O expansion

Tab. 12.5: Safety technology reference values for MSI 400 (without I/O expansion)

			Characteristic values			
Configuration of safety outputs **Output groups:** **Q1/Q2, Q3/Q4, IQ1/IQ2, IQ3/IQ4**			**Safety Integrity Level (IEC 61508)[1]**	**Category (EN ISO 13849-1)**	**Performance level (EN ISO 13849-1)[1]**	**PFHd[2]**
Single-channel or two-channel input	Two-channel outputs (with or without test pulses)		SIL3	4	PL e	$1.3 \cdot 10^{-9}$
	Single-channel output Q_n for an output group	Test pulses at all outputs of an output group activated	SIL3	4	PL e	$1.4 \cdot 10^{-9}$
		Test pulses at one output of the output group activated and test pulses at the other output of the output group deactivated. The value indicated refers to the output with activated test pulses.	SIL3	3	PL e	$1.4 \cdot 10^{-9}$
		Output test pulses deactivated	SIL2	3	PL d	$9.8 \cdot 10^{-9}$

[1] For detailed information regarding the safety configuration of your machine/system, please contact the Leuze electronic branch in charge of your area.

[2] Average probability of a hazardous-causing failure per hour

12.3.2 Controller modules with safe I/O expansions

Tab. 12.6: Safety technology reference values for MSI 400 (with I/O expansion)

			Characteristic values			
Configuration of safety outputs **Output groups:** **MSI 4xx:** **Q1/Q2, Q3/Q4, IQ1/IQ2, IQ3/IQ4** **MSI-EM-IO84:** **Q1/Q2/Q3/Q4**			**Safety Integrity Level (IEC 61508)[1]**	**Category (EN ISO 13849-1)**	**Performance Level (EN ISO 13849-1)[1]**	**PFHd[2]**
Single-channel or dual channel input	Dual channel outputs (with or without test pulses)		SIL3	4	PL e	$4.3 \cdot 10^{-9}$
	Single-channel output Q_n for an output group	Test pulses at all outputs of an output group activated	SIL3	4	PL e	$4.3 \cdot 10^{-9}$
		Test pulses at one output of the output group activated and test pulses at the other output of the output group deactivated. The value indicated refers to the output with activated test pulses.	SIL3	3	PL e	$4.3 \cdot 10^{-9}$
		Output test pulses deactivated	SIL2	3	PL d	$1.7 \cdot 10^{-8}$

[1] For detailed information regarding the safety configuration of your machine/system, please contact the Leuze electronic branch in charge of your area.

[2] Average probability of a hazardous-causing failure per hour

12.4 Data sheet

12.4.1 Controller module

Tab. 12.7: MSI 410 and MSI 420/430 data sheet

	MSI 410 / MSI 420/430	
Safety Integrity Level	SIL3 (IEC 61508)	
SIL claim limit[1]	SILCL3 (EN 62061)	
Category	Category 4 (EN ISO 13849-1)	
Performance Level[1]	PL e (EN ISO 13849-1)	
PFHd (average probability of a hazardous-causing failure per hour)		
T_M (usage time)	20 years (EN ISO 13849)	
Protection class	III (EN 61140)	
Protection type	IP 20 (EN 60529)	
Ambient temperature during operation	-25 to +65°C	
Storage temperature	-25 to +70 °C	
Humidity	10 to 95%, non-condensing	
Fatigue strength	5 … 150 Hz (EN 60068-2-6)	
Shock resistance • Continuous shock • Brief shock	 10 g, 16 ms (EN 60068-2-29) 30 g, 11 ms (EN 60068-2-27)	
Electromagnetic compatibility	Class A (EN 61000-6-2, EN 55011)	
Data interface	Internal safety bus	
Configuration interface 1	USB mini	
Configuration interface 2	RJ 45	
Plug-in terminal blocks and connection data	**Screw terminal**	**Spring-loaded terminal**
Single-wire or fine-strand	1 x 0.2 … 2.5 mm² or 2 x 0.2 … 1.0 mm²	2 x 0.2 … 1.5 mm²
Fine-strand with ferrules	1 × 0.25 … 2.5 mm² or 2 × 0.25 … 1.0 mm²	2 × 0.25 … 1.5 mm²
Conductor size AWG (use copper cables only)	26…14	24 to 16
Maximum tightening torque	0.5 … 0.6 Nm (5 … 7 lbf-in)	—
Stripping length	7 mm	
Dimensions (W × H × L)	45 × 96.6 × 121 mm	45 × 107 × 121 mm
Weight	290 g (± 5%)	290 g (± 5%)
Power supply for the system (A1, A2)		
Supply voltage	24 V DC (16.8 to 30 V DC)	

	MSI 410 / MSI 420/430
Type of supply voltage	PELV or SELV The current for the powerpack must be limited to a maximum of 4 A – either by the powerpack itself or by a fuse UL 508: Use a galvanically isolated power supply with limited output voltage and power (42.4 VDC, 100 VA). The output voltage must be secured by a fuse that meets the standards according to UL 248. Connect all supply connections of the system to a common source and ensure a common ground connection when using several sources.
Power consumption Caution: The power consumption increases with each module that is connected to the system.	Max. 3.3 W
Short-circuit protection	4 A gG (with tripping characteristic B or C)
Power supply for output groups B1 and B2 (B2: only MSI 420/430**)**	
Supply voltage	24 V DC (16.8 to 30 V DC)
Type of supply voltage	PELV or SELV The current for the powerpack must be limited externally to a maximum of 8 A per output group (B1 and B2) – either by the powerpack itself or by a fuse.
Power consumption	2 x 0.3 W
Switch-on time	Max. 18 s
Short-circuit protection	8 A gG (with tripping characteristic B or C)
Input circuit MSI 410: I1 … I20 / MSI 420/430: I1 to I16, IQ1 to IQ4	
Input voltage HIGH	13 to 30 V DC
Input voltage LOW	-5 to +5 V DC
Input current HIGH	Type 2.3 mA / Max. 6 mA
Input current LOW	< 2 mA
Input capacity	10 nF
Input reverse current with ground breakdown [2]	< 0.1 mA
Test outputs (T1 - T4)	
Number of outputs	4 (with 4 test signal generators)
Type of output	Semiconductor, push-pull, short-circuit-proof
Output voltage HIGH	U_{A1} - 1.2 V
Output current LOW	-10 mA (limited)
Output current HIGH	Single output: max. 120 mA Total of all test outputs: max. 120 mA
Test pulse rate (test period)	1 to 25 Hz, configurable
Test pulse duration (test gap)	1 to 100 ms, configurable
Load capacity	1 µF for test gap ≥ 4 ms 0.22 µF for test gap 1 ms

	MSI 410 / MSI 420/430
Line resistance	< 100 Ω
Safety outputs MSI 410: Q1 … Q4 / MSI 420/430: Q1 to Q4, IQ1 - IQ4	
Number of outputs • MSI 410: • MSI 420/430	 4 8 (4 fixed and 4 selectable outputs)
Type of output	High-side MOSFET, short-circuit-proof and current-monitored
Output voltage HIGH	$U_{Qn} \geq U_{Bx}$ - 0.6 V
Output current HIGH Max. overload current/duration	≤ 4.0 A ≤ 12 A / 8 ms
Total current I_{tot} T_U ≤ 45°C T_U ≤ 55 °C T_U ≤ 65 °C	Per output pair (Q1/2, Q3/4, IQ1/2, IQ3/4) ≤ 4.0 A ≤ 2.5 A ≤ 1.6 A
Output test, can be deactivated [3,4,5] Test pulse width Test pulse rate	 ≤ 450 µs 10 Hz
Leakage current LOW[6]	< 0.1 mA
Load capacity	0.5 µF
Line resistance[7]	< 200 Ω
Maximum permissible coil energy without external protection elements[8]	< 0.125 J
Response time	Depends on logic setup (Details: *System response times [chapter 12.1]*)

[1] For detailed information regarding the safety configuration of your machine/system, please contact the Leuze electronic branch in charge of your area.

[2] Do not connect any other safe inputs in parallel when the reverse current could lead to a HIGH state at the other input.

[3] When activated; in that case, the outputs are tested regularly (brief LOW switching). When selecting the downstream control elements, make sure that the test pulses will not cause switch-off with the previously listed parameters or deactivate the test pulses at the outputs.

[4] When safety outputs are being used without test pulses, then either all of the safety outputs without test pulses must be switched off at least once a year simultaneously for at least one second or the MSI 400 system must be restarted by switching off the supply voltage.

[5] If safety outputs are being used without test pulses:
Use shielded or separate cabling for safety outputs without output tests because short-circuits to 24 V will not be immediately detected.

[6] In the event of a fault (interruption in the 0 V line), the maximum of the leakage current will flow in the OSSD line. The downstream control element must determine this state as being LOW. An FPLC (Failsafe Programmable Logic Controller) must be able to detect this state.

[7] Limit the line resistance of the individual lines to the downstream control element to this value in order to ensure that a short-circuit will be reliably detected between the outputs. (Also see EN 60204, Safety of machinery - Electrical equipment of machines - Part 1: General requirements.)

[8] Examples of the resulting maximum coil inductivity:
1000 mH @ 0.5 A, 250 mH @ 1 A, 62.5 mH @ 2 A

12.4.2 Safe input/output expansion module

Tab. 12.8: MSI-EM-IO84 data sheet

	MSI-EM-IO84	
T_M (usage time)	20 years (EN ISO 13849)[1]	
Protection class	III (EN 61140)	
Protection type	Terminals: IP 20 (EN 60529) Housing: IP 40 (EN 60529)	
Ambient temperature during operation	-25 … +65 °C	
Storage temperature	-25 … +70 °C	
Humidity	10 to 95 %, non-condensing	
Fatigue strength	5 … 150 Hz (EN 60068-2-6)	
Shock resistance • Continuous shock • Brief shock	 10 g, 16 ms (EN 60068-2-29) 30 g, 11 ms (EN 60068-2-27)	
Electromagnetic compatibility	Class A (EN 61000-6-2, EN 55011)	
Power consumption via internal safety bus without currents at X1, X2	max. 1.1 W	
Data interface	Internal safety bus	
Plug-in terminal blocks and connection data	**Screw terminal**	**Spring-loaded terminal**
Single-wire or fine-strand	1 x 0.2 … 2.5 mm² or 2 x 0.2 … 1.0 mm²	2 x 0.2 … 1.5 mm²
Fine-strand with ferrules as per EN 46228	1 × 0.25 … 2.5 mm² or 2 × 0.25 … 1.0 mm²	2 × 0.25 … 1.5 mm²
Conductor size AWG (use copper cables only)	26 to 14	24 to 16
Maximum tightening torque	0.5 … 0.6 Nm (5 … 7 lbf-in)	—
Stripping length	7 mm	
Dimensions (W × H × L)	22.5 × 96.5 × 121 mm	22.5 × 107 × 121 mm
Weight	164 g (± 5%)	164 g (± 5%)
Output supply (A1, A2)		
Supply voltage	24 V DC (16.8 to 30 V DC)	
Type of supply voltage	PELV or SELV The current for the powerpack must be limited to a maximum of 4 A – either by the powerpack itself or by a fuse.	
Power consumption	1W	
Switch-on time	Max. 18 s	
Short-circuit protective device	4 A gG (with tripping characteristic B or C)	
Input circuit (I1–I8)		
Input voltage HIGH	13 to 30 V DC	
Input voltage LOW	-5 to +5 V DC	

	MSI-EM-IO84
Input current HIGH	2.4 to 3.8 mA
Input current LOW	-2.5 to 2.1 mA
Input reverse current with ground breakdown [2]	Max. 20 mA 1.5 kΩ effective reverse resistance for supply current
Input capacity	10 nF
Synchronous time	4 ms to 30 ms, configurable
Number of inputs	8
Test outputs (X1, X2)	
Number of outputs	2 (with 2 test signal generators)
Type of output	PNP semi-conductor, short-circuit-proof, short-circuit-monitored (configurable)
Output voltage HIGH	15 to 30 V DC (max. 1.8 V drop to terminal A1 on the controller module)
Output resistance LOW	22 Ω ± 10%, voltage limited at about 10 mA
Output current	Max. 120 mA at a test output (X1 or X2) Thus, a maximum of eight testable sensor cascades are possible per module with a maximum of 30 mA each. The total current of the MSI 400 system is limited to a maximum of 1.28 A. This corresponds, for example, to a maximum of 32 testable sensor cascades with 30 mA each plus 64 tactile sensors at the inputs of expansion modules with 5 mA each.
Test pulse rate (test period)	1 to 25 Hz, configurable
Test pulse duration (test gap)	1 to 100 ms, configurable
Load capacity	1 µF for test gap ≥ 4 ms 0.5 µF for test gap 1 ms
Line resistance	< 100 Ω
Safety outputs (Q1 to Q4)	
Number of outputs	4
Type of output	High-side MOSFET, short-circuit-proof
Output voltage HIGH	16 to 30 V DC (max. 0.8 V drop to terminal A1 on this module)
Leakage current LOW[3]	Max. 0.1 mA
Output current	Max. 4.0 A
Total current I_{tot} TU ≤ 45°C TU ≤ 55 °C TU ≤ 65°C UL/CSA applications	 Max. 4.0 A Max. 3.2 A Max. 2.5 A Max. 3.2 A
Test pulse width[4]	< 650 µs or deactivated[5,6]
Test pulse rate	Max. 5 Hz
Load capacity	0.5 µF

	MSI-EM-IO84
Line resistance[7]	Max. 5 Ω (e.g. 100 m × 1.5 mm² = 1.2 Ω)
Maximum permissible coil energy without external protection elements[8] Hardware version V1.00 Hardware version V1.01	 0.22 J 0.37 J
Response time	Depends on logic setup (Details: *System response times [chapter 12.1]*)
Data interface	Internal safety bus

[1] When safety outputs are being used without test pulses, then either all of the safety outputs without test pulses must be switched off at least once a year simultaneously for at least one second or the MSI 400 system must be restarted by switching off the supply voltage.

[2] Do not connect any other safe inputs in parallel when the reverse current could lead to a HIGH state at the other input.

[3] In the event of a fault (interruption in the 0 V line), the maximum of the leakage current will flow in the OSSD line. The downstream control element must determine this state as being LOW. An FPLC (Failsafe Programmable Logic Controller) must be able to detect this state.

[4] When activated; in that case, the outputs are tested regularly (brief LOW switching). When selecting the downstream control elements, make sure that the test pulses will not cause switch-off with the previously listed parameters or deactivate the test pulses at the outputs.

[5] When safety outputs are being used without test pulses, then either all of the safety outputs without test pulses must be switched off at least once a year simultaneously for at least one second or the MSI 400 system must be restarted by switching off the supply voltage.

[6] If safety outputs are being used without test pulses:
Use shielded or separate cabling for safety outputs the test pulses of which have been deactivated, because a short-circuit to 24 V will not be immediately detected if the output is HIGH. In the event of a detected internal hardware error, this could affect the ability to switch off the other outputs through reverse current.

[7] Limit the line resistance of the individual lines to the downstream control element to this value in order to ensure that a short-circuit will be reliably detected between the outputs. (Also see EN 60204, Safety of machinery - Electrical equipment of machines - Part 1: General requirements.)

[8] Examples of the resulting maximum coil induction:
HW V1.00: 1760 mH @ 0.5 A, 440 mH @ 1 A, 110 mH @ 2 A
HW V1.01: 2960 mH @ 0.5 A, 740 mH @ 1 A, 185 mH @ 2 A

12.4.3 Safe input expansion module

Tab. 12.9: MSI-EM-I8 data sheet

	MSI-EM-I8
Safety Integrity Level[1]	SIL3 (IEC 61508)
Category	Category 4 (EN ISO 13849-1)
Performance Level[1]	PL e (EN ISO 13849-1)
PFHd (average probability of a hazardous-causing failure per hour)	$5.68 \cdot 10^{9}$
T_M (usage time)	20 years (EN ISO 13849)
Protection class	III (EN 61140)
Protection type	Terminals: IP 20 (EN 60529) Housing: IP 40 (EN 60529)

	MSI-EM-I8	
Ambient temperature during operation	-25 to +55 °C	
Storage temperature	-25 to +70 °C	
Humidity	10 to 95%, non-condensing	
Climatic conditions	55°C, 95% relative humidity (EN 61131-2)	
Fatigue strength	5 … 150 Hz (EN 60068-2-6)	
Shock resistance • Continuous shock • Brief shock	 10 g, 16 ms (EN 60068-2-29) 30 g, 11 ms (EN 60068-2-27)	
Electromagnetic compatibility	Class A (EN 61000-6-2, EN 55011)	
Power consumption via internal safety bus without currents at X1 ... X8	Max. 1.4 W	
Data interface	Internal safety bus	
Plug-in terminal blocks and connection data	**Screw terminal**	**Spring-loaded terminal**
Single-wire or fine-strand	1 x 0.2-2.5 mm^2 2 x 0.2-1.0 mm^2	2 x 0.2-1.5 mm^2
Fine-strand with ferrules	1 × 0.25–2.5 mm^2 2 × 0.25–1.0 mm^2	2 × 0.25-1.5 mm^2
Conductor size AWG (use copper cables only)	26-14	24-16
Maximum tightening torque	0.5-0.6 Nm (5-7 lbf-in)	—
Stripping length	7 mm	
Dimensions (W × H × L)	22.5 × 96.5 × 121 mm	22.5 × 107 × 121 mm
Weight	139 g (± 5%)	139 g (± 5%)
Input circuit (I1 to I8)		
Input voltage HIGH	13 to 30 V DC	
Input voltage LOW	-5 to +5 V DC	
Input current HIGH	2.4 to 3.8 mA	
Input current LOW	-2.5 to 2.1 mA	
Input reverse current with ground breakdown [2]	Max. 20 mA 1.5 kΩ effective reverse resistance for supply current	
Input capacity	Max. 10 nF	
Synchronous time	4 ms to 30 ms, configurable	
Number of inputs	8	
Test outputs (X1 to X8)		
Number of outputs	8 (with two test signal generators)	
Type of output	PNP semi-conductor, short-circuit-proof, cross-connection-monitored	
Output voltage	16 to 30 V DC	

	MSI-EM-I8
Output current	Max. 120 mA at both of the two test signal generators (X1/X3/X5/X7 or X2/X4/X6/X8) Thus, a maximum of eight testable sensor cascades are possible per module with a maximum of 30 mA each. The total current of the MSI 400 system is limited to a maximum of 1.28 A. This corresponds, for example, to 32 inputs of testable sensors with 30 mA and 64 inputs of MSI-EM-IO84 or MSI-EM-I8 modules.
Test pulse rate (test period)	1 to 25 Hz, configurable
Test pulse duration (test gap)	1 to 100 ms, configurable
Load capacity	1 µF for test gap ≥ 4 ms 0.5 µF for test gap 1 ms
Line resistance	< 100 Ω

[1] For detailed information regarding the safety configuration of your machine/system, please contact the Leuze electronic branch in charge of your area.

[2] Do not connect any other safe inputs in parallel when the reverse current could lead to a HIGH state at the other input.

12.4.4 Standard input/output expansion module

Tab. 12.10: MSI-EM-IO84NP data sheet

	MSI-EM-IO84NP	
Protection class	III (EN 61140)	
Protection type	Terminals: IP 20 (EN 60529) Housing: IP 40 (EN 60529)	
Ambient temperature during operation	-25 … +55 °C	
Storage temperature	-40 … +70 °C	
Humidity	10 ... 95%, non-condensing	
Fatigue strength	5 … 150 Hz (EN 60068-2-6)	
Shock resistance • Continuous shock • Brief shock	 10 g, 16 ms (EN 60068-2-29) 30 g, 11 ms (EN 60068-2-27)	
Electromagnetic compatibility	EN 61000 6 2, Class A (EN 55011) Emission EN 61000-6-4 Immission	
Power consumption via the internal safety bus	max. 0.5 W	
Data interface	Internal safety bus	
Plug-in terminal blocks and connection data	**Screw terminal**	**Spring-loaded terminal**
Single-wire or fine-strand	1 x 0.2–2.5 mm^2 2 x 0.2-1.0 mm^2	2 x 0.2-1.5 mm^2
Fine-strand with ferrules	1 × 0.25-2.5 mm² 2 × 0.25–1.0 mm²	2 × 0.25-1.5 mm²

	MSI-EM-IO84NP	
Conductor size AWG (use copper cables only)	26-14	24-16
Maximum tightening torque	0.5-0.6 Nm (5-7 lbf-in)	—
Stripping length	7 mm	
Dimensions (W × H × L)	22.5 × 96.5 × 121 mm	22.5 × 107 × 121 mm
Weight	150 g (± 5%)	150 g (± 5%)
Power supply (A1, A2)		
Supply voltage	24 V DC (16.8 to 30 V DC)	
Type of supply voltage	PELV or SELV	
Power consumption	max. 120 W (depending on load)	
Switch-on time	max. 18 s	
Short-circuit protective device	4 A gG (tripping characteristic B or C)	
Input circuit (I1–I4 & IY5-IY8)		
Number of inputs	4 to max. 8 (depending on configuration)	
Input voltage HIGH	13 V DC… 30 V DC	
Input voltage LOW	–3 V DC … +5 V DC	
Input current HIGH	2 mA … 3.5 mA	
Input current LOW	0 mA… 1.0 mA	
Outputs (Y1-Y4 & IY5-IY8)		
Number of outputs	4 to max. 8 (depending on configuration)	
Type of output	High-side MOSFET, short-circuit-proof	
Output voltage	24 V DC (16.8 V DC … 30 V DC)	
Output sum current I_{sum} max.	4 A	
Output current per output max.	0.5 A	
Derating sum current I_{sum} TU ≤ 45°C TU ≤ 55 °C TU ≤ 65°C	 Max. 4.0 A Max. 3.2 A Max. 2.5 A	
Response time	Depending on logic setup (Details: *System response times [chapter 12.1]*)	
Data interface	Internal safety bus	

12.5 Dimensional drawings

12.5.1 Controller module

Screw terminal

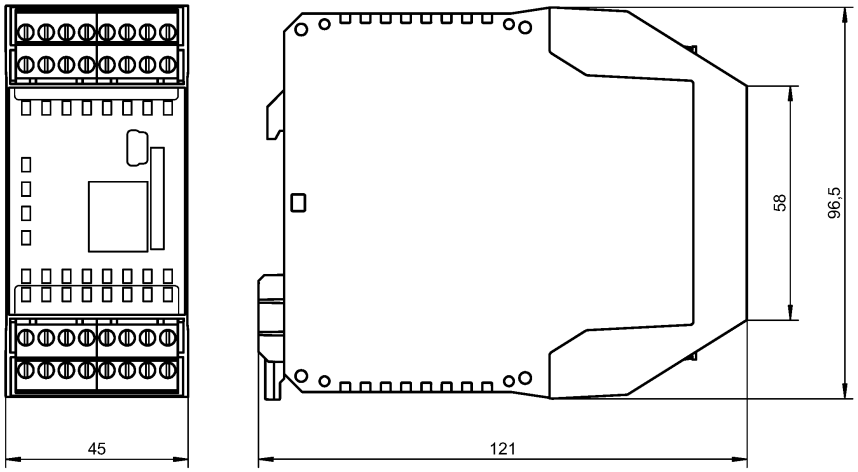

Spring-loaded terminal

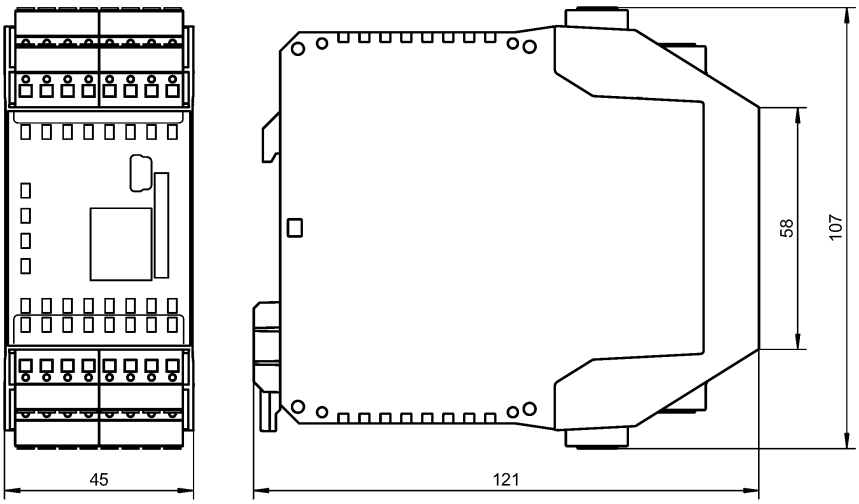

12.5.2 Input/output expansion modules

MSI-FB-CANOPEN

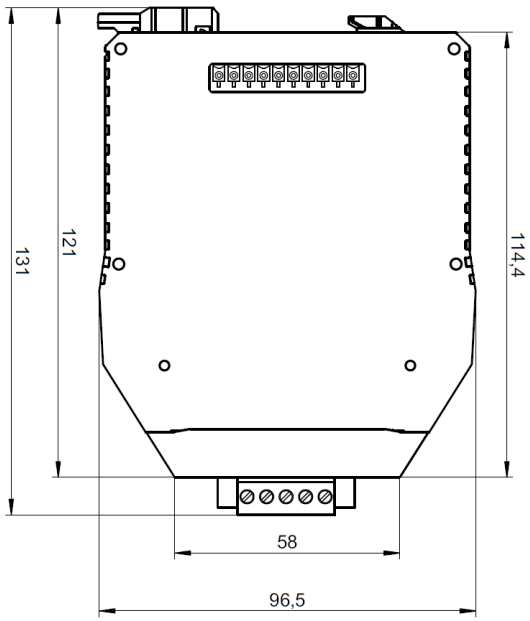

MSI-FB-PROFIBUS

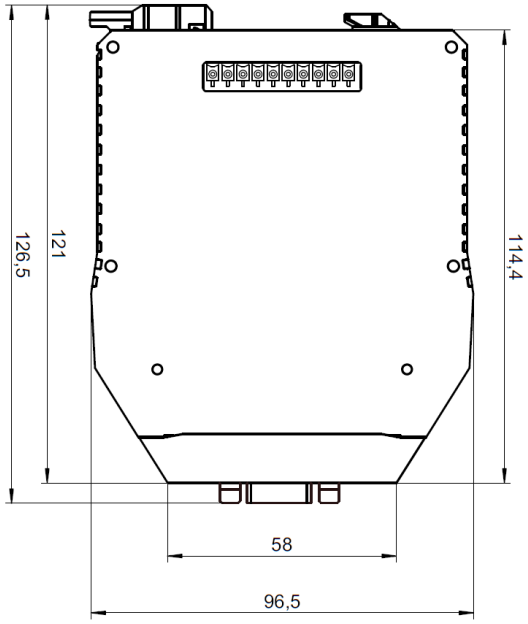

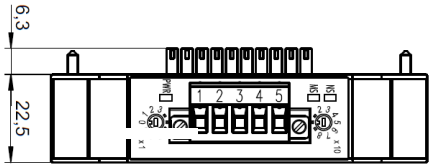

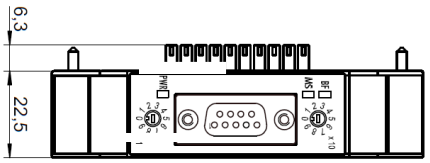

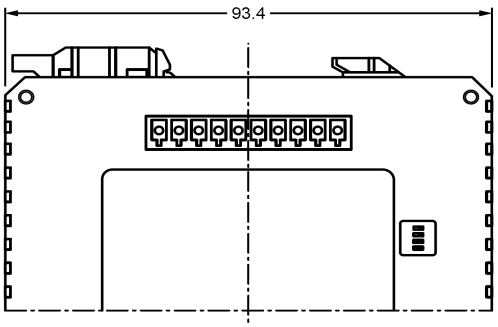

Fig. 12.35: Dimensions of the input/output expansion modules (mm)

13 Order data

13.1 Hardware modules and accessories

Tab. 13.1: Order numbers for the MSI 400 modules

Type	Description	Part number
MSI 410-01	Controller module, USB connection, 20 inputs / 4 outputs Screw terminals, pluggable	50132984
MSI 410-03	Controller module, USB connection, 20 inputs / 4 outputs Spring-loaded terminals, pluggable	50132985
MSI 410.F50-01	Controller module, USB connection, 20 inputs / 4 outputs with press function Screw terminals, pluggable	50134311
MSI 410.F50-03	Controller module, USB connection, 20 inputs / 4 outputs with press functions Spring-loaded terminals, pluggable	50134312
MSI 420-01	Controller module, USB and Ethernet connection, 16 inputs / 4 outputs and 4 configurable inputs or outputs Screw terminals, pluggable	50132986
MSI 420-03	Controller module, USB and Ethernet connection, 16 inputs / 4 outputs and 4 configurable inputs or outputs Spring-loaded terminals, pluggable	50132987
MSI 420.F50-01	Controller module, USB and Ethernet connection, 16 inputs / 4 outputs and 4 configurable inputs or outputs with press functions Screw terminals, pluggable	50134313
MSI 420.F50-03	Controller module, USB and Ethernet connection, 16 inputs / 4 outputs and 4 configurable inputs or outputs with press functions Spring-loaded terminals, pluggable	50134314
MSI 430-01	Controller module, USB and industrial Ethernet connection, 16 inputs / 4 outputs and 4 configurable inputs or outputs Screw terminals, pluggable	50132988
MSI 430-03	Controller module, USB and industrial Ethernet connection, 16 inputs / 4 outputs and 4 configurable inputs or outputs Spring-loaded terminals, pluggable	50132989

Type	Description	Part number
MSI 430.F50-01	Controller module, USB and industrial Ethernet connection, 16 inputs / 4 outputs and 4 configurable inputs or outputs with press functions Screw terminals, pluggable	50134315
MSI 430.F50-03	Controller module, USB and industrial Ethernet connection, 16 inputs / 4 outputs and 4 configurable inputs or outputs with press functions Spring-loaded terminals, pluggable	50134316
MSI-SD-CARD	Program removable storage	50132996
KB USB A – USB miniB	1.8 m USB configuration capable	50117011
MSI-FB-CANOPEN	CANopen gateway	50132994
MSI-FB-PROFIBUS	PROFIBUS-DP gateway	50132995
MSI-EM-IO84-01	Safe input/output expansion with output test pulses 8 inputs/4 outputs Screw terminals, pluggable	50132990
MSI-EM-IO84-03	Safe input/output expansion with output test pulses 8 inputs/4 outputs Spring-loaded terminals, pluggable	50132991
MSI-EM-I8-01	Safe input expansion 8 inputs Screw terminals, pluggable	50132992
MSI-EM-I8-03	Safe input expansion 8 inputs Spring-loaded terminals, pluggable	50132993
MSI-EM-IO84NP-01	Standard input/output expansion 4 inputs / 4 outputs and 4 configurable inputs or outputs Screw terminals, pluggable	50132997
MSI-EM-IO84NP-03	Standard input/output expansion 4 inputs / 4 outputs and 4 configurable inputs or outputs Screw-loaded terminals, pluggable	50132998
MSI-FB-ETHERCAT	EtherCAT Gateway	50132999

13.2 Modules for contact expansion

Type	Description	Part number
MSI-SR-CM43-01	Contact expansion, 24 V DC, 4 NC (normally closed contact), 3 NO (normally open contact), Screw terminals, pluggable	50133026
MSI-SR-CM43-03	Contact expansion, 24 V DC, 4 NC (normally closed contact), 3 NO (normally open contact), Spring-loaded terminals, pluggable	50133027
MSI-SR-CM42R-01	Contact expansion with 2 relay groups, 24 V DC, 2 x 2 NC (normally closed contact), 2 x 1 NO (normally open contact), Screw terminals, pluggable	50133014
MSI-SR-CM42R-03	Contact expansion with 2 relay groups, 24 V DC, 2 x 2 NC (normally closed contact), 2 x 1 NO (normally open contact), Spring-loaded terminals, pluggable	50133015

14 Appendix

14.1 Declaration of Conformity

MSI-4xx

Leuze electronic

the sensor people

EU-/EG-KONFORMITÄTS-ERKLÄRUNG	EU/EC DECLARATION OF CONFORMITY	DECLARATION UE/CE DE CONFORMITE
Hersteller:	Manufacturer:	Constructeur:
	Leuze electronic GmbH + Co. KG In der Braike 1, PO Box 1111 73277 Owen, Germany	
Produktbeschreibung:	Description of product:	Description de produit:
Sicherheitssteuerung MSI 410(.F50), MSI 420(.F50), MSI 430(.F50)	**Safety controller MSI 410(.F50), MSI 420(.F50), MSI 430(.F50)**	**Commande de sécurité MSI 410(.F50), MSI 420(.F50), MSI 430(.F50)**
Die alleinige Verantwortung für die Ausstellung dieser Konformitätserklärung trägt der Hersteller.	This declaration of conformity is issued under the sole responsibility of the manufacturer.	La présente déclaration de conformité est établie sous la seule responsabilité du fabricant.
Der oben beschriebene Gegenstand der Erklärung erfüllt die einschlägigen Harmonisierungsrechts-vorschriften der Union:	The object of the declaration described above is in conformity with the relevant Union harmonisation legislation:	L'objet de la déclaration décrit ci-dessus est conforme à la législation d'harmonisation de l'Union applicable:
Angewandte EU-/EG-Richtlinie(n):	Applied EU/EC Directive(s):	Directive(s) UE/CE appliquées:
2006/42/EG (*1) 2014/30/EU 2011/65/EU	**2006/42/EC (*1) 2014/30/EU 2011/65/EU**	**2006/42/CE (*1) 2014/30/UE 2011/65/UE**

Angewandte harmonisierte Normen / Applied harmonized standards / Normes harmonisées appliquées:

EN ISO 13849-1:2015 (*1) EN 692:2005+A1:2009 (*1) EN 13736:2003+A1:2009 (*1)	**IEC 62061:2015 (*1) EN 693:2001+A2:2011 (*1) EN 61496-1:2013 (in extracts) (*1)**	**IEC 60204-1:2009 (in extracts) (*1) EN 12622:2009+A1:2013 (*1) EN 574:1996+A1:2008 (in extracts) (*1)**

Angewandte technische Spezifikationen / Applied technical specifications / Spécifications techniques appliquées:

IEC 61508 Part 1-7:2010 (*1) IEC 61511-1:2016 (*1)	**EN 50156-1:2015 (*1) EN 61131-2: 2012**	**EN 50178:1997 (*1) EN 61131-6:2012 (*1)**

Notified Body
(*1) TUEV Rheinland Industrie Service GmbH, Am Grauen Stein, 51105 Koeln, 01/205/5534.00/16, NB 0035
Dokumentationsbevollmächtigter ist der genannte Hersteller, Kontakt: quality@leuze.de.
Authorized for documentation is the stated manufacturer, contact: quality@leuze.de.
Autorisé pour documentation est le constructeur déclaré, contact: quality@leuze.de

2014/30/EU veröffentlicht: 29.03.2014, EU-Amtsblatt Nr. L 96/79-106; 2014/30/EU published: 29.03.2014, EU-Journal No. L 96/79-106; 2014/30/UE publié: Journal EU n° L 96/79-106

16. 3. 17
Datum / Date / Date

Ulrich Balbach,
Geschäftsführer / Managing Director / Gérant

i.A.
i.A. Fabien Zelenda
Quality Management Central Functions

Leuze electronic GmbH + Co. KG
In der Braike 1
D-73277 Owen
Telefon +49 (0) 7021 573-0
Telefax +49 (0) 7021 573-199
info@leuze.de
www.leuze.com

LEO-ZQM-148-07-FO

Leuze electronic GmbH + Co. KG, Sitz Owen, Registergericht Stuttgart, HRA 230712
Persönlich haftende Gesellschafterin Leuze electronic Geschäftsführungs-GmbH, Sitz Owen, Registergericht Stuttgart, HRB 230550
Geschäftsführer: Ulrich Balbach
USt.-IdNr. DE 145912521 | Zollnummer 2554232
Es gelten ausschließlich unsere aktuellen Verkaufs- und Lieferbedingungen
Only our current Terms and Conditions of Sale and Delivery shall apply

SMART SENSOR BUSINESS

MSI-EM-IO84

Leuze electronic

the sensor people

EU-/EG-KONFORMITÄTS-ERKLÄRUNG	EU/EC DECLARATION OF CONFORMITY	DECLARATION UE/CE DE CONFORMITE
Hersteller:	Manufacturer:	Constructeur:
	Leuze electronic GmbH + Co. KG In der Braike 1, PO Box 1111 73277 Owen, Germany	
Produktbeschreibung:	Description of product:	Description de produit:
Sicheres I/O-Modul MSI-EM-IO84	**Safety I/O-Module MSI-EM-IO84**	**Module d'Entrées / Sorties de sécurité MSI-EM-IO84**
Die alleinige Verantwortung für die Ausstellung dieser Konformitätserklärung trägt der Hersteller.	This declaration of conformity is issued under the sole responsibility of the manufacturer.	La présente déclaration de conformité est établie sous la seule responsabilité du fabricant.
Der oben beschriebene Gegenstand der Erklärung erfüllt die einschlägigen Harmonisierungsrechts-vorschriften der Union:	The object of the declaration described above is in conformity with the relevant Union harmonisation legislation:	L'objet de la déclaration décrit ci-dessus est conforme à la législation d'harmonisation de l'Union applicable:
Angewandte EU-/EG-Richtlinie(n):	Applied EU/EC Directive(s):	Directive(s) UE/CE appliquées:
2006/42/EG (*1) 2014/30/EU 2011/65/EU	**2006/42/EC (*1) 2014/30/EU 2011/65/EU**	**2006/42/CE (*1) 2014/30/UE 2011/65/UE**

Angewandte harmonisierte Normen / Applied harmonized standards / Normes harmonisées appliquées:

EN ISO 13849-1:2015 (*1) EN 692:2005+A1:2009 (*1) EN 13736:2003+A1:2009 (*1)	**IEC 62061:2015 (*1) EN 693:2001+A2:2011 (*1) EN 61496-1:2013 (in extracts) (*1)**	**IEC 60204-1:2009 (in extracts) (*1) EN 12622:2009+A1:2013 (*1) EN 574:1996+A1:2008 (in extracts) (*1)**

Angewandte technische Spezifikationen / Applied technical specifications / Spécifications techniques appliquées:

IEC 61508 Part 1-7:2010 (*1) IEC 61511-1:2016 (*1)	**EN 50156-1:2015 (*1) EN 61131-2: 2012**	**EN 50178:1997 (*1) EN 61131-6:2012 (*1)**

Notified Body

(*1) TUEV Rheinland Industrie Service GmbH, Am Grauen Stein, 51105 Koeln, 01/205/5534.00/16, NB 0035

Dokumentationsbevollmächtigter ist der genannte Hersteller, Kontakt: quality@leuze.de.

Authorized for documentation is the stated manufacturer, contact: quality@leuze.de.

Autorisé pour documentation est le constructeur déclaré, contact: quality@leuze.de

2014/30/EU veröffentlicht: 29.03.2014, EU-Amtsblatt Nr. L 96/79-106; 2014/30/EU published: 29.03.2014, EU-Journal No. L 96/79-106; 2014/30/UE publié: Journal EU n° L 96/79-106

16. 3. 2017

Datum / Date / Date

Ulrich Balbach,
Geschäftsführer / Managing Director / Gérant

i.A. Fabien Zelenda
Quality Management Central Functions

Leuze electronic GmbH + Co. KG
In der Braike 1
D-73277 Owen
Telefon +49 (0) 7021 573-0
Telefax +49 (0) 7021 573-199
info@leuze.de
www.leuze.com

LEO-ZQM-148-07-FO

Leuze electronic GmbH + Co. KG, Sitz Owen, Registergericht Stuttgart, HRA 230712
Persönlich haftende Gesellschafterin Leuze electronic Geschäftsführungs-GmbH, Sitz Owen, Registergericht Stuttgart, HRB 230550
Geschäftsführer: Ulrich Balbach
USt.-IdNr. DE 145912521 | Zollnummer 2554232
Es gelten ausschließlich unsere aktuellen Verkaufs- und Lieferbedingungen
Only our current Terms and Conditions of Sale and Delivery shall apply

SMART SENSOR BUSINESS

MSI-EM-I8

Leuze electronic

the sensor people

EU-/EG-KONFORMITÄTS-ERKLÄRUNG	EU/EC DECLARATION OF CONFORMITY	DECLARATION UE/CE DE CONFORMITE
Hersteller:	Manufacturer:	Constructeur:
	Leuze electronic GmbH + Co. KG In der Braike 1, PO Box 1111 73277 Owen, Germany	
Produktbeschreibung:	Description of product:	Description de produit:
Sicheres Eingangsmodul MSI-EM-I8	**Safety IN-Module MSI-EM-I8**	**Module d'Entrées de sécurité MSI-EM-I8**
Die alleinige Verantwortung für die Ausstellung dieser Konformitätserklärung trägt der Hersteller.	This declaration of conformity is issued under the sole responsibility of the manufacturer.	La présente déclaration de conformité est établie sous la seule responsabilité du fabricant.
Der oben beschriebene Gegenstand der Erklärung erfüllt die einschlägigen Harmonisierungsrechts-vorschriften der Union:	The object of the declaration described above is in conformity with the relevant Union harmonisation legislation:	L'objet de la déclaration décrit ci-dessus est conforme à la législation d'harmonisation de l'Union applicable:
Angewandte EU-/EG-Richtlinie(n):	Applied EU/EC Directive(s):	Directive(s) UE/CE appliquées:
2006/42/EG (*1) 2014/30/EU 2011/65/EU	**2006/42/EC (*1) 2014/30/EU 2011/65/EU**	**2006/42/CE (*1) 2014/30/UE 2011/65/UE**

Angewandte harmonisierte Normen / Applied harmonized standards / Normes harmonisées appliquées:

EN ISO 13849-1:2015 (*1) EN 692:2005+A1:2009 (*1) EN 13736:2003+A1:2009 (*1)	**IEC 62061:2015 (*1) EN 693:2001+A2:2011 (*1) EN 61496-1:2013 (in extracts) (*1)**	**IEC 60204-1:2009 (in extracts) (*1) EN 12622:2009+A1:2013 (*1) EN 574:1996+A1:2008 (in extracts) (*1)**

Angewandte technische Spezifikationen / Applied technical specifications / Spécifications techniques appliquées:

IEC 61508 Part 1-7:2010 (*1) IEC 61511-1:2016 (*1)	**EN 50156-1:2015 (*1) EN 61131-2: 2012**	**EN 50178:1997 (*1) EN 61131-6:2012 (*1)**

Notified Body

(*1) TUEV Rheinland Industrie Service GmbH, Am Grauen Stein, 51105 Koeln, 01/205/5534.00/16, NB 0035

Dokumentationsbevollmächtigter ist der genannte Hersteller, Kontakt: quality@leuze.de.

Authorized for documentation is the stated manufacturer, contact: quality@leuze.de.

Autorisé pour documentation est le constructeur déclaré, contact: quality@leuze.de

2014/30/EU veröffentlicht: 29.03.2014, EU-Amtsblatt Nr. L 96/79-106; 2014/30/EU published: 29.03.2014, EU-Journal No. L 96/79-106; 2014/30/UE publié: Journal EU n° L 96/79-106

16.3.2017

Datum / Date / Date

Ulrich Balbach,
Geschäftsführer / Managing Director / Gérant

i.A. Fabien Zelenda
Quality Management Central Functions

Leuze electronic GmbH + Co. KG
In der Braike 1
D-73277 Owen
Telefon +49 (0) 7021 573-0
Telefax +49 (0) 7021 573-199
info@leuze.de
www.leuze.com

Leuze electronic GmbH + Co. KG, Sitz Owen, Registergericht Stuttgart, HRA 230712
Persönlich haftende Gesellschafterin Leuze electronic Geschäftsführungs-GmbH, Sitz Owen, Registergericht Stuttgart, HRB 230550
Geschäftsführer: Ulrich Balbach
USt.-IdNr. DE 145912521 | Zollnummer 2554232

Es gelten ausschließlich unsere aktuellen Verkaufs- und Lieferbedingungen
Only our current Terms and Conditions of Sale and Delivery shall apply

SMART SENSOR BUSINESS

LEO-ZQM-148-07-FO

MSI-EM-IO84NP

Leuze electronic

the sensor people

EU-/EG-KONFORMITÄTS-ERKLÄRUNG	EU/EC DECLARATION OF CONFORMITY	DECLARATION UE/CE DE CONFORMITE
Hersteller:	Manufacturer:	Constructeur:
	Leuze electronic GmbH + Co. KG **In der Braike 1, PO Box 1111** **73277 Owen, Germany**	
Produktbeschreibung:	Description of product:	Description de produit:
Nicht-sicheres I/O-Modul **MSI-EM-IO84NP**	**Non-Safety I/O-Module** **MSI-EM-IO84NP**	**Module d'Entrées / Sorties** **MSI-EM-IO84NP**
Die alleinige Verantwortung für die Ausstellung dieser Konformitätserklärung trägt der Hersteller.	This declaration of conformity is issued under the sole responsibility of the manufacturer.	La présente déclaration de conformité est établie sous la seule responsabilité du fabricant.
Der oben beschriebene Gegenstand der Erklärung erfüllt die einschlägigen Harmonisierungsrechts-vorschriften der Union:	The object of the declaration described above is in conformity with the relevant Union harmonisation legislation:	L'objet de la déclaration décrit ci-dessus est conforme à la législation d'harmonisation de l'Union applicable:
Angewandte EU-/EG-Richtlinie(n):	Applied EU/EC Directive(s):	Directive(s) UE/CE appliquées:
2006/42/EG (*1) **2014/30/EU** **2011/65/EU**	**2006/42/EC (*1)** **2014/30/EU** **2011/65/EU**	**2006/42/CE (*1)** **2014/30/UE** **2011/65/UE**

Angewandte harmonisierte Normen / Applied harmonized standards / Normes harmonisées appliquées:

EN ISO 13849-1:2015 (*1)	**IEC 62061:2015 (*1)**	**IEC 60204-1:2009 (in extracts) (*1)**
EN 692:2005+A1:2009 (*1)	**EN 693:2001+A2:2011 (*1)**	**EN 12622:2009+A1:2013 (*1)**
EN 13736:2003+A1:2009 (*1)	**EN 61496-1:2013 (in extracts) (*1)**	**EN 574:1996+A1:2008 (in extracts) (*1)**

Angewandte technische Spezifikationen / Applied technical specifications / Spécifications techniques appliquées:

IEC 61508 Part 1-7:2010 (*1)	**EN 50156-1:2015 (*1)**	**EN 50178:1997 (*1)**
IEC 61511-1:2016 (*1)	**EN 61131-2: 2012**	**EN 61131-6:2012 (*1)**

Notified Body

(*1) TUEV Rheinland Industrie Service GmbH, Am Grauen Stein, 51105 Koeln, 01/205/5534.00/16, NB 0035
Dokumentationsbevollmächtigter ist der genannte Hersteller, Kontakt: quality@leuze.de.
Authorized for documentation is the stated manufacturer, contact: quality@leuze.de.
Autorisé pour documentation est le constructeur déclaré, contact: quality@leuze.de

2014/30/EU veröffentlicht: 29.03.2014, EU-Amtsblatt Nr. L 96/79-106; 2014/30/EU published: 29.03.2014, EU-Journal No. L 96/79-106; 2014/30/UE publié: Journal EU n° L 96/79-106

16. 3. 2017

Datum / Date / Date

Ulrich Balbach,
Geschäftsführer / Managing Director / Gérant

i.A. Fabien Zelenda
Quality Management Central Functions

Leuze electronic GmbH + Co. KG
In der Braike 1
D-73277 Owen
Telefon +49 (0) 7021 573-0
Telefax +49 (0) 7021 573-199
info@leuze.de
www.leuze.com

LEO-ZQM-148-07-FO

Leuze electronic GmbH + Co. KG, Sitz Owen, Registergericht Stuttgart, HRA 230712
Persönlich haftende Gesellschafterin Leuze electronic Geschäftsführungs-GmbH, Sitz Owen, Registergericht Stuttgart, HRB 230550
Geschäftsführer: Ulrich Balbach
USt.-IdNr. DE 145912521 | Zollnummer 2554232

Es gelten ausschließlich unsere aktuellen Verkaufs- und Lieferbedingungen
Only our current Terms and Conditions of Sale and Delivery shall apply

SMART SENSOR BUSINESS

14.2 Checklist for manufacturers

The information in the following points must be available at least during first-time commissioning. It may vary depending on the application and the requirements from the manufacturer/supplier must be checked.

This checklist should be retained or stored with the machine documents so that it can be used as a reference during recurring tests.

	NOTICE
	This checklist is not a replacement for the first-time commissioning or the regular testing done by a qualified person.

Tab. 14.1: Checklist for first-time commissioning

Question	Yes		No	
Were the safety guidelines according to the directives/standards valid for the machine used as a basis?	**Yes**	o	**No**	o
Are the directives and standards used listed in the Declaration of Conformity?	**Yes**	o	**No**	o
Does the safety equipment correspond to the required category?	**Yes**	o	**No**	o
Are the required protective measures against electric shock effective (protection class)?	**Yes**	o	**No**	o
Has the protective function been checked in accordance with the testing information in this documentation? In particular: • Functional check of the command devices, sensors, and actuators connected to the safety control • Test of all switch-off paths	**Yes**	o	**No**	o
Have you ensured that a complete test of the safety functions has been carried out after every configuration change to the safety control?	**Yes**	o	**No**	o

14.3 List of all error messages, causes and aids

Tab. 14.2: Controller module error messages

Error No.	Error type	Logbook message	System behavior	Remedy
00000001	Info	Log generator info function block	System continues to run	-
00000002	Warning	Log generator warning function block	System continues to run	-
00000003	Error	Log generator error function block	System continues to run	-
10100001	Error	An unknown error occurred.	Disconnection	Support request
10100002	Error	An internal error occurred.	Disconnection	Support request
10100003	Error	Time exceeded when preparing a message for the control.	No connection	Check connection
10100004	Error	The value cannot be forced, since the force mode is not enabled.	Remains connected	Activate force mode
10100005	Error	The controller does not support the message type.	Disconnection	Support request
10100006	Error	The hash value of a read data is not correct.	Disconnection	Support request
10100007	Error	The preamble size of the controller message is not plausible.	Disconnection	Support request
10100008	Error	The usage data size of the controller message is not plausible.	Disconnection	Support request
10100009	Error	The overall data size does not correspond to the number of received data.	Disconnection	Repeat support request
1010000A	Error	An error occurred in the data flow of a segmented read message.	No connection	Repeat support request
1010000B	Error	The checksum in the controller message is incorrect.	Disconnection	Support request
1010000C	Error	Timeout when sending a message to the controller. Possible causes: There is already a communication link to the controller; The Ethernet or USB connection was interrupted.	Disconnection	Check connection support request
1010000D	Error	Timeout when receiving a message from the controller. Possible causes: There is already a communication link to the controller; The Ethernet or USB connection was interrupted.	Disconnection	Check connection support request
1010000E	Error	Unexpected message received.	Disconnection	Support request
1010000F	Error	The message from the controller is corrupt.	Disconnection	Support request
10100010	Error	The message from the controller is corrupt.	Disconnection	Support request
10100011	Error	The message to the controller could not be processed.	Disconnection	Repeat support request

Error No.	Error type	Logbook message	System behavior	Remedy
10100012	Error	The controller could not respond positively to the request.	Remains connected	Repeat Repair SD card Support request
10100013	Error	The maximum number of repeated requests is exceeded.	Disconnection	Repeat support request
10100015	Error	Connection to the control could not be established.	No connection	Check connection support request
10100016	Error	The password for the user to be logged on is invalid.	Remains connected	Check password
10100017	Error	The controller could not adopt the desired state.	Remains connected	Repeat support request
10100018	Error	The station's memory card is not inserted.	Disconnection	Insert valid SD card
10200002	Error	The project on the control is invalid.	No connection	Transfer a new valid project
10200003	Error	The verification status of the project and controller are different.	No connection	Reverify the project
10200004	Error	The PC project and the project on the controller could not be synchronized.	No connection	Disconnect and reconnect support request
10200005	Error	The current user does not have authorization to communicate with the controller. Connection was disconnected.	No connection	Redefine the user rights
10200006	Warning	The project on the controller does not match the module configuration.	Remains connected	Adjust hardware or project
10200007	Error	The controller reports an error.	-	Support request
10200008	Error	The controller reports a deviating CRC in the project file.	-	Repeat of Support request work step
10200009	Error	The permissible waiting time for the operation was exceeded.	-	Repeat support request
1020000A	Info	The verification has been interrupted.	-	Repeat support request
1020000B	Warning	The faulty project file is still in the station and must be replaced by the updated project file. Please reconnect and load the updated project on the station.	-	Update the device with the repaired project
10300001	Error	The data of the logic analyzer could not be saved.	-	Check Windows user rights
10300002	Error	The data of the logic analyzer could not be loaded.	-	Repeat support request
10300003	Error	Input/output was not found.	-	Support request
10400001	Error	The log messages could not be saved.	-	Check Windows user rights
10400002	Error	The file contains more than 64 log messages. Only the first 64 were imported.	-	Reduce the number of log messages

Error No.	Error type	Logbook message	System behavior	Remedy
10400003	Error	The log messages could not be imported.	-	Support request
10500001	Error	The logon on the controller was faulty.	-	Repeat support request
10600001	Error	This user already exists. Please select a different name.	-	Use another name
10600002	Error	User list could not be imported.	-	Repeat support request
10600003	Warning	The following users were not imported, since they already exist.	-	-
10700001	Error	Project file could not be loaded. File format is not correct.	-	Search for a new program version: Main menu > via > Update, or support request
10700002	Error	Failed to create a project from the module configuration!	-	Search for a new program version: Main menu > via > Update, or support request
10700003	Error	Project file could not be saved!	-	Check Windows user rights
10700004	Error	Project file could not be loaded. File format is not correct.	-	Search for a new program version: Main menu > via > Update, or support request
10700005	Error	Library file could not be loaded. File format is not correct.	-	Search for a new program version: Main menu > via > Update, or support request
10700006	Error	Faulty project structure.	-	Search for a new program version: Main menu > via > Update, or support request
10700008	Error	Setting data could not be loaded. Faulty file.	-	Search for a new program version: Main menu > via > Update, or support request
10700009	Error	Failed to import library, since corresponding elements already exist.	-	-
1070000A	Error	File cannot be loaded, incorrect signature.	-	Search for a new program version: Main menu > via > Update, or support request
1070000B	Error	The gateway configuration could not be opened. The configuration is for a different gateway type.	-	-

Error No.	Error type	Logbook message	System behavior	Remedy
1070000C	Error	The version of the project file is not supported by this program version.	-	Search for a new program version: Main menu > via > Update, or support request
1070000D	Error	The configuration data for a module could not be correctly loaded.	-	Search for a new program version: Main menu > via > Update, or support request
10800001	Warning	It is not allowed to force more than 10 values.	-	-
11000000	Error	HTML help could not be found. Please check whether it was installed correctly.	-	Reinstall or repair the program, Support request
12000000	Error	The version information is incorrect. Please contact support.	-	Support request
12000001	Error	No connection to the update server. Please check the Internet connection.	-	Check Internet connection
13000000	Error	The test gaps exceed half the maximum period.	-	Check the test parameters
13000001	Error	The test periods exceed the input's maximum test periods.	-	Check the test parameters
13000002	Error	A test period with these minimum and maximum values cannot be configured.	-	Check the test parameters
13000003	Error	The test gaps exceed half the period.	-	Check the test parameters
13000004	Error	The required test parameters are not possible for at least one element on the module.	-	Check the test parameters
14000000	Error	Error in the logic configuration	-	Support request
14000001	Error	No enough space to insert elements on logic page.	-	Insert new logic page and reorganize function blocks
14000002	Warning	Element could not be grouped.	-	-
14000003	Error	An element is only allowed for groupings.	-	-
14000004	Error	The maximum number of function block has already been created.	-	Simplify logic
14000005	Error	The retentive memory function block could not be generated.	-	Support request
14000006	Error	An element is not allowed for groupings.	-	-
14000007	Error	Function blocks are not compatible with the selected controller module.	-	If you use this controller module, the corresponding function blocks will be deleted.

Error No.	Error type	Logbook message	System behavior	Remedy
14000008	Error	The selection cannot be grouped, since there are more than 8 connections to inputs.	-	-
14000009	Error	The selection cannot be grouped, since there are more than 8 connections to outputs.	-	-
1400000A	Error	No functional blocks have been selected for grouping.	-	-
15000001	Error	The CRC could not be calculated correctly	-	Repeat support request
15000002	Error	Report generation failed	-	Repeat support request
22010140	Warning	Error in system configuration	System continues to run	Reload system configuration
220101F5	Warning	Error in system configuration	Configuration required	Reload system configuration
220101F6	Warning	Error in system configuration	Configuration required	Reload system configuration
220101F7	Warning	Error in system configuration	Configuration required	Reload system configuration
220101F8	Warning	Error in system configuration	Configuration required	Reload system configuration
220101F9	Warning	Error in system configuration	Configuration required	Reload system configuration
220101FA	Warning	Error in system configuration	Configuration required	Reload system configuration
220101FC	Warning	Error in system configuration	Configuration required	Reload system configuration
22010226	Warning	Error in system configuration	Configuration required	Reload system configuration
22010227	Warning	Error in system configuration	Configuration required	Reload system configuration
22010228	Warning	Error in system configuration	Configuration required	Reload system configuration
22010231	Warning	Pulse period 0 must have pulse length 0.	Configuration required	Change system configuration and reload
22010232	Warning	Pulse length must be <= pulse period/2.	Configuration required	Change system configuration and reload
22010233	Warning	Impermissible test period (permissible: 0,40,200,400,600,800,1000).	Configuration required	Change system configuration and reload
22010234	Warning	Pulse length must be 4..100ms in increments of 4ms	Configuration required	Change system configuration and reload
22010240	Warning	Maximum count of function blocks or mapping exceeded	Configuration required	Change system configuration and reload

Error No.	Error type	Logbook message	System behavior	Remedy
22010241	Warning	The number of IO modules is different in the configuration	Configuration required	Change system configuration and reload
22010242	Warning	The number of Gateway modules is different in the configuration	Configuration required	Change system configuration and reload
22010244	Warning	The type or major version of the I/O module is inappropriate for the project	Configuration required	Change system configuration and reload
22010245	Warning	The type or major version of the gateway module is inappropriate for the project	Configuration required	Change system configuration and reload
22010250	Warning	The press function components are not supported by this device version	Configuration required	Change system configuration and reload
22011243	Warning	Incorrect device name or safety category of the module	Configuration required	Change system configuration and reload
22012243	Warning	Incorrect module type	Configuration required	Change system configuration and reload
22013243	Warning	Incorrect number of inputs	Configuration required	Change system configuration and reload
22014243	Warning	Incorrect number of outputs	Configuration required	Change system configuration and reload
22015243	Warning	Incorrect manufacturer	Configuration required	Change system configuration and reload
22016243	Warning	Software version not supported	Configuration required	Change system configuration and reload
22017243	Warning	Software identification 'V' not found	Configuration required	Change system configuration and reload
2201xxxx	Warning	Error in the configuration	Configuration required	Change system configuration and reload
23010001	Warning	Sequence error at I1/I2	System continues to run	-
23010003	Warning	Sequence error at I3/I4	System continues to run	-
23010005	Warning	Sequence error at I5/I6	System continues to run	-
23010007	Warning	Sequence error at I7/I8	System continues to run	-
23010009	Warning	Sequence error at I9/I10	System continues to run	-
2301000B	Warning	Sequence error at I11/I12	System continues to run	-

Error No.	Error type	Logbook message	System behavior	Remedy
2301000D	Warning	Sequence error at I13/I14	System continues to run	-
2301000F	Warning	Sequence error at I15/I16	System continues to run	-
23010011	Warning	Sequence error at IQ1/IQ2	System continues to run	-
23010013	Warning	Sequence error at IQ3/IQ4	System continues to run	-
2301xxxx	Warning	Sequence error at 2-channel input	System continues to run	-
23020001	Warning	Synchronization time error I1/I2	System continues to run	-
23020003	Warning	Synchronization time error I3/I4	System continues to run	-
23020005	Warning	Synchronization time error I5/I6	System continues to run	-
23020007	Warning	Synchronization time error I7/I8	System continues to run	-
23020009	Warning	Synchronization time error I9/I10	System continues to run	-
2302000B	Warning	Synchronization time error I11/I12	System continues to run	-
2302000D	Warning	Synchronization time error I13/I14	System continues to run	-
2302000F	Warning	Synchronization time error I15/I16	System continues to run	-
23020011	Warning	Synchronization time error IQ1/IQ2	System continues to run	-
23020013	Warning	Synchronization time error IQ3/IQ4	System continues to run	-
2302xxxx	Warning	Synchronization time error at 2-channel input	System continues to run	-
23100100	Info	Sensor error rectified	System continues to run	-
23100204	Warning	Different rotational direction	System continues to run	Check motion sensor
23100207	Warning	Error in system configuration	System continues to run	Change system configuration and reload
23100211	Warning	Frequency at I13/I15 too high	System continues to run	Check motion sensor
23100212	Warning	Frequency at I14/I16 too high	System continues to run	Check motion sensor
2310021x	Warning	Sensor frequency too high	System continues to run	Check motion sensor
23100221	Warning	Phase error, sensor signal A B at I13/I15	System continues to run	Check motion sensor
23100222	Warning	Phase error, sensor signal A B at I14/I16	System continues to run	Check motion sensor

Error No.	Error type	Logbook message	System behavior	Remedy
2310022x	Warning	Phase error, sensor signals A B	System continues to run	Check motion sensor
23100231	Warning	Error of inverted sensor signal at I13/I14	System continues to run	Check motion sensor
23100232	Warning	Error of inverted sensor signal at I13/I15	System continues to run	Check motion sensor
23100234	Warning	Error of inverted sensor signal at I14/I16	System continues to run	Check motion sensor
23100238	Warning	Error of inverted sensor signal at I15/I16	System continues to run	Check motion sensor
2310023x	Warning	Error of inverted sensor signals	System continues to run	Check motion sensor
23100241	Warning	Frequency difference of individual channels at I13/I15	System continues to run	Check motion sensor
23100242	Warning	Frequency difference of individual channels at I14/I16	System continues to run	Check motion sensor
2310024x	Warning	Frequency difference of individual channels on multichannel sensor	System continues to run	Check motion sensor
2310025x	Warning	EMC malfunction	System continues to run	Check EMC envir-onment
2310026x	Warning	Interruption at push/pull sensor output	System continues to run	Check motion sensor
23100270	Warning	Discrepancy in data flow I13 .. I16	System continues to run	Check EMC envir-onment
23100271	Warning	Discrepancy in counter at I13 .. I16	System continues to run	Check motion sensor, check EMC environment
2310030x	Warning	Stuck at at I13 or I14	System continues to run	Check motion sensor
231003x0	Warning	Stuck at at I15 or I16	System continues to run	Check motion sensor
23100401	Warning	Maximum position value exceeded	System continues to run	Check motion sensor
23100403	Warning	Maximum speed exceeded	System continues to run	Check motion sensor
23100404	Warning	No valid information on rotational direction	System continues to run	Check motion sensor
23100405	Warning	Speed comparison outside of limit	System continues to run	Check motion sensor
23100406	Warning	Speed comparison outside limit	System continues to run	Check motion sensor
23100407	Warning	Error in system configuration	System continues to run	Change system configuration and reload
23100408	Warning	Maximum position exceeded	System continues to run	Check motion sensor
23100409	Warning	Minimum position exceeded	System continues to run	Check motion sensor

Error No.	Error type	Logbook message	System behavior	Remedy
23100501	Info	No sensor signal	System continues to run	Check motion sensor
240A0000	Warning	Output error at Q1	System continues to run; affected outputs switch off	Check outputs
240A0001	Warning	Output error at Q2	System continues to run; affected outputs switch off	Check outputs
240A0002	Warning	Output error at Q3	System continues to run; affected outputs switch off	Check outputs
240A0003	Warning	Output error at Q4	System continues to run; affected outputs switch off	Check outputs
240A0004	Warning	Output error at IQ1	System continues to run; affected outputs switch off	Check outputs
240A0005	Warning	Output error at IQ2	System continues to run; affected outputs switch off	Check outputs
240A0006	Warning	Output error at IQ3	System continues to run; affected outputs switch off	Check outputs
240A0007	Warning	Output error at IQ4	System continues to run; affected outputs switch off	Check outputs
240A0008	Warning	Output error at group Q1/Q2	System continues to run; affected outputs switch off	Check outputs
240A0009	Warning	Output error at group Q3/Q4	System continues to run; affected outputs switch off	Check outputs
240A000A	Warning	Output error at group IQ1/IQ2	System continues to run; affected outputs switch off	Check outputs
240A000B	Warning	Output error at group IQ3/IQ4	System continues to run; affected outputs switch off	Check outputs
240Axxxx	Error	Output error	System stop; voltage OFF-ON required	Check outputs
240B0001	Info	Output error at Q1/Q2 rectified	System continues to run	-
240B0002	Info	Output error at Q3/Q4 rectified	System continues to run	-
240B0003	Info	Output error at IQ1/IQ2 rectified	System continues to run	-
240B0004	Info	Output error at IQ3/IQ4 rectified	System continues to run	-
240Bxxxx	Info	Output error rectified	System continues to run	-

Error No.	Error type	Logbook message	System behavior	Remedy
240Dxxxx	Error	Error in system configuration	System stop; voltage OFF-ON required	Reload system configuration and restart
240Exxxx	Warning	Problem with forcing	System continues to run	Restart forcing
240Fxxxx	Warning	Problem with forcing	System continues to run	Restart forcing
2410xxxx	Warning	Problem with forcing	System continues to run	Restart forcing
2411xxxx	Warning	Problem with forcing	System continues to run	Restart forcing
2412xxxx	Warning	Problem with forcing	System continues to run	Restart forcing
2413xxxx	Warning	Problem with forcing	System continues to run	Restart forcing
2414xxxx	Warning	Problem with forcing	System continues to run	Restart forcing
2415xxxx	Warning	Problem with forcing	System continues to run	Restart forcing
2416xxxx	Warning	Connection problem	System stop	Restart
2417xxxx	Warning	Forcing time expired	System continues to run	-
2418xxxx	Error	Internal error	System stop; voltage OFF-ON required	Restart or make complaint
2419xxxx	Warning	Error in system configuration.	System continues to run	Reload system configuration
241Axxxx	Warning	Output error	System continues to run	Check outputs
241B0001	Warning	Stuck-at-high at Q1	System continues to run	Check outputs
241B0002	Warning	Stuck-at-high at Q2	System continues to run	Check outputs
241B0003	Warning	Stuck-at-high at Q3	System continues to run	Check outputs
241B0004	Warning	Stuck-at-high at Q4	System continues to run	Check outputs
241B0005	Warning	Stuck-at-high at IQ1	System continues to run	Check outputs
241B0006	Warning	Stuck-at-high at IQ2	System continues to run	Check outputs
241B0007	Warning	Stuck-at-high at IQ3	System continues to run	Check outputs
241B0008	Warning	Stuck-at-high at IQ4	System continues to run	Check outputs
241Bxxxx	Warning	Output error	System continues to run	Check outputs
241D0001	Warning	Test pulse error at I1	System continues to run	Check cabling

Error No.	Error type	Logbook message	System behavior	Remedy
241D0002	Warning	Test pulse error at I2	System continues to run	Check cabling
241D0003	Warning	Test pulse error at I3	System continues to run	Check cabling
241D0004	Warning	Test pulse error at I4	System continues to run	Check cabling
241D0005	Warning	Test pulse error at I5	System continues to run	Check cabling
241D0006	Warning	Test pulse error at I6	System continues to run	Check cabling
241D0007	Warning	Test pulse error at I7	System continues to run	Check cabling
241D0008	Warning	Test pulse error at I8	System continues to run	Check cabling
241D0009	Warning	Test pulse error at I9	System continues to run	Check cabling
241D000A	Warning	Test pulse error at I10	System continues to run	Check cabling
241D000B	Warning	Test pulse error at I11	System continues to run	Check cabling
241D000C	Warning	Test pulse error at I12	System continues to run	Check cabling
241D000D	Warning	Test pulse error at I13	System continues to run	Check cabling
241D000E	Warning	Test pulse error at I14	System continues to run	Check cabling
241D000F	Warning	Test pulse error at I15	System continues to run	Check cabling
241D0010	Warning	Test pulse error at I16	System continues to run	Check cabling
241D0011	Warning	Test pulse error at IQ1	System continues to run	Check cabling
241D0012	Warning	Test pulse error at IQ2	System continues to run	Check cabling
241D0013	Warning	Test pulse error at IQ3	System continues to run	Check cabling
241D0014	Warning	Test pulse error at IQ4	System continues to run	Check cabling
241Dxxxx	Warning	Check of test pulses resulted in error	System continues to run	Check cabling
241Exxxx	Warning	Verification of project failed	System continues to run	Re-verification
241Fxxxx	Warning	Verification of project failed	System continues to run	Re-verification
2420xxxx	Warning	Verification of project failed	System continues to run	Re-verification
2421xxxx	Warning	Verification of project failed	System continues to run	Re-verification

Error No.	Error type	Logbook message	System behavior	Remedy
2422xxxx	Warning	Verification of project failed	System continues to run	Re-verification
2423xxxx	Info	The verified project on the SD card has changed	System continues to run	-
2433xxxx	Warning	Problem during fast shutoff	System continues to run	-
2435Fx00	Warning	Safety mat cable break	System continues to run	Check cabling
2435Fx02	Warning	Safety mat cable break	System continues to run	Check cabling
2435Fx04	Warning	Safety mat cable break	System continues to run	Check cabling
2435Fx06	Warning	Safety mat cable break	System continues to run	Check cabling
2435Fx08	Warning	Safety mat cable break	System continues to run	Check cabling
2435Fx0A	Warning	Safety mat cable break	System continues to run	Check cabling
2435Fx0C	Warning	Safety mat cable break	System continues to run	Check cabling
2435Fx0E	Warning	Safety mat cable break	System continues to run	Check cabling
2435Fx10	Warning	Safety mat cable break	System continues to run	Check cabling
2435Fx12	Warning	Safety mat cable break	System continues to run	Check cabling
2435Fxxx	Warning	Safety mat cable break	System continues to run	Check cabling
2435xxxx	Warning	Safety mat cable break	System continues to run	Check cabling
2436xxxx	Warning	Check of a safety feature	System continues to run	Unverification of project
2437xxxx	Warning	Check of a safety feature	System continues to run	Reduce the number of forced inputs to less than or equal to 10
2438xxxx	Warning	Configuration data faulty	System continues to run	Modify project data or make complaint
2439xxxx	Error	The configuration changed during execution of the application	System stop; voltage OFF-ON required	Restart or make complaint
243Bxxxx	Warning	Configuration data faulty	System continues to run	Modify project data or make complaint
243CFx00	Warning	Stuck-at-high safety mat at I1	System continues to run	Check cabling
243CFx01	Warning	Stuck-at-high safety mat at I2	System continues to run	Check cabling
243CFx02	Warning	Stuck-at-high safety mat at I3	System continues to run	Check cabling

Error No.	Error type	Logbook message	System behavior	Remedy
243CFx03	Warning	Stuck-at-high safety mat at I4	System continues to run	Check cabling
243CFx04	Warning	Stuck-at-high safety mat at I5	System continues to run	Check cabling
243CFx05	Warning	Stuck-at-high safety mat at I6	System continues to run	Check cabling
243CFx06	Warning	Stuck-at-high safety mat at I7	System continues to run	Check cabling
243CFx07	Warning	Stuck-at-high safety mat at I8	System continues to run	Check cabling
243CFx08	Warning	Stuck-at-high safety mat at I9	System continues to run	Check cabling
243CFx09	Warning	Stuck-at-high safety mat at I10	System continues to run	Check cabling
243CFx0A	Warning	Stuck-at-high safety mat at I11	System continues to run	Check cabling
243CFx0B	Warning	Stuck-at-high safety mat at I12	System continues to run	Check cabling
243CFx0C	Warning	Stuck-at-high safety mat at I13	System continues to run	Check cabling
243CFx0D	Warning	Stuck-at-high safety mat at I14	System continues to run	Check cabling
243CFx0E	Warning	Stuck-at-high safety mat at I15	System continues to run	Check cabling
243CFx0F	Warning	Stuck-at-high safety mat at I16	System continues to run	Check cabling
243CFx10	Warning	Stuck-at-high safety mat at IQ1	System continues to run	Check cabling
243CFx11	Warning	Stuck-at-high safety mat at IQ2	System continues to run	Check cabling
243CFx12	Warning	Stuck-at-high safety mat at IQ3	System continues to run	Check cabling
243CFx13	Warning	Stuck-at-high safety mat at IQ4	System continues to run	Check cabling
243CFxxx	Warning	Stuck-at-high safety mat	System continues to run	Check cabling
243D0012	Warning	Error in system configuration	Configuration required	Reload system configuration
243D0034	Warning	Error in system configuration	Configuration required	Reload system configuration
250100x1	Warning	Supply voltage A1 too low	System continues to run	Supply voltage must be set correctly
250100x2	Warning	Supply voltage B1 too low	System continues to run	Supply voltage must be set correctly
250100x3	Warning	Supply voltage B2 too low	System continues to run	Supply voltage must be set correctly

Error No.	Error type	Logbook message	System behavior	Remedy
2501xxxx	Warning	Supply voltage too low	System continues to run	Supply voltage must be set correctly
250200x1	Warning	Supply voltage A1 too high	System continues to run	Supply voltage must be set correctly
250200x2	Warning	Supply voltage B1 too high	System continues to run	Supply voltage must be set correctly
250200x3	Warning	Supply voltage B2 too high	System continues to run	Supply voltage must be set correctly
2502xxxx	Warning	Supply voltage too high	System continues to run	Supply voltage must be set correctly
2503xxx1	Error	Supply voltage A1 too low	System stop; voltage OFF-ON required	Supply voltage must be set correctly
2504xxx1	Error	Supply voltage A1 too high	System stop; voltage OFF-ON required	Supply voltage must be set correctly
2504xxx2	Error	Supply voltage B1 too high	System stop; voltage OFF-ON required	Supply voltage must be set correctly
2504xxx3	Error	Supply voltage B2 too high	System stop; voltage OFF-ON required	Supply voltage must be set correctly
2504xxxx	Error	Supply voltage too high	System stop; voltage OFF-ON required	Supply voltage must be set correctly
250500x1	Info	Supply voltage A1 within normal range	System continues to run	-
250500x2	Info	Supply voltage B1 within normal range	System continues to run	-
250500x3	Info	Supply voltage B2 within normal range	System continues to run	-
2505xxxx	Info	Supply voltage within normal range	System continues to run	-
250900x1	Warning	Overcurrent at output group Q1/ Q2	System continues to run	Check load current
250900x2	Warning	Overcurrent at output group Q3/ Q4	System continues to run	Check load current
250900x3	Warning	Overcurrent at output group IQ1/ IQ2	System continues to run	Check load current
250900x4	Warning	Overcurrent at output group IQ3/ IQ4	System continues to run	Check load current
2509xxxx	Warning	Overcurrent at output	System continues to run	Check load current
2604xxxx	Warning	Internal/external S-bus error	System continues to run	Reduce the number of expansion modules

Error No.	Error type	Logbook message	System behavior	Remedy
2609xxxx	Warning	Error in system configuration.	System continues to run	Reload system configuration
260Axxxx	Warning	Error in system configuration.	System continues to run	Reload system configuration
260Bxxxx	Error	Too many expansion modules inserted	System stop; voltage OFF-ON required	Check connection of modules
2733xxxx	Warning	Input discrepancy rectified	System continues to run	-
28020000	Info	Values were changed	System continues to run	-
2805xxxx	Warning	Communication interrupted	System continues to run	Restart or make complaint
2808xxxx	Warning	No SD card	Configuration required	Insert SD card
2809xxxx	Warning	Action not permitted	System continues to run	Execute correct action
280Axxxx	Warning	Ethernet connection too slow	System continues to run	-
2B0Exxxx	Warning	Time for logic processing exceeded	System continues to run	-
2Bxxxxxx	Warning	Internal error	System continues to run	-
3409xxxx	Warning	Invalid force request	System continues to run	-
340Axxxx	Warning	Invalid trace request	System continues to run	-
34290003	Warning	Synchronization time error I1/I2	System continues to run	-
3429000C	Warning	Synchronization time error I3/I4	System continues to run	-
34290030	Warning	Synchronization time error I5/I6	System continues to run	-
342900C0	Warning	Synchronization time error I7/I8	System continues to run	-
3429xxxx	Warning	Dual-channel synchronization time error	System continues to run	-
342A0003	Warning	Sequence error at I1/I2	System continues to run	-
342A000C	Warning	Sequence error at I3/I4	System continues to run	-
342A0030	Warning	Sequence error at I5/I6	System continues to run	-
342A00C0	Warning	Sequence error at I7/I8	System continues to run	-
342Axxxx	Warning	Sequence error at 2-channel input	System continues to run	-
36010001	Warning	External test pulse error at I1	System continues to run	-

Error No.	Error type	Logbook message	System behavior	Remedy
36010002	Warning	External test pulse error at I2	System continues to run	-
36010004	Warning	External test pulse error at I3	System continues to run	-
36010008	Warning	External test pulse error at I4	System continues to run	-
36010010	Warning	External test pulse error at I5	System continues to run	-
36010020	Warning	External test pulse error at I6	System continues to run	-
36010040	Warning	External test pulse error at I7	System continues to run	-
36010080	Warning	External test pulse error at I8	System continues to run	-
3601xxxx	Warning	Error at external input test pulse	System continues to run	-
3602xxxx	Warning	Safety mat cable break	System continues to run	-
3702xxxx	Warning	Short circuit, stuck-at-low, VCC or GND break	System continues to run	-
37040003	Warning	Cross-reference at Q1/Q2	System continues to run	-
3704000C	Warning	Cross-reference at Q3/Q4	System continues to run	-
3704xxxx	Warning	Cross-reference at the output	System continues to run	-
37050001	Warning	Stuck-at-high at Q1	System continues to run	-
37050002	Warning	Stuck-at-high at Q2	System continues to run	-
37050004	Warning	Stuck-at-high at Q3	System continues to run	-
37050008	Warning	Stuck-at-high at Q4	System continues to run	-
3705xxxx	Warning	Stuck-at-high at the output	System continues to run	-
3801xxxx	Error	Supply voltage error (logic voltage)	System stop; voltage OFF-ON required	-
3802xxxx	Error	Powerpack monitoring	System stop; voltage OFF-ON required	-
3803xxxx	Error	Output voltage error	System stop; voltage OFF-ON required	-
3806xxxx	Warning	GND break at A1 and A2	System continues to run	-
3807xxxx	Warning	Supply voltage A1 too low	System continues to run	-

Error No.	Error type	Logbook message	System behavior	Remedy
3902xxxx	Warning	Error in system configuration	System continues to run	-
3903xxxx	Warning	Error in system configuration	System continues to run	-
3904xxxx	Warning	Error in system configuration	System continues to run	-
3905xxxx	Warning	Invalid value for synchronizing time	System continues to run	Configure synchronous time with value 0 or a whole-number multiple of 4 ms
3906xxxx	Warning	Error in system configuration	System continues to run	-
3907xxxx	Warning	Error in system configuration	System continues to run	-
3908xxxx	Warning	Error in system configuration	System continues to run	-
3909xxxx	Warning	Error in system configuration	System continues to run	-
390Axxxx	Warning	Error in system configuration	System continues to run	-
390Bxxxx	Warning	Error in system configuration	System continues to run	-
390Cxxxx	Warning	Error in system configuration	System continues to run	-
390Dxxxx	Warning	Error in system configuration	System continues to run	-
390Exxxx	Warning	Error in system configuration	System continues to run	-
390Fxxxx	Warning	Error in system configuration	System continues to run	-
3910xxxx	Warning	Error in system configuration	System continues to run	-
3911xxxx	Warning	Error in system configuration	System continues to run	-
3945xxxx	Warning	Fast shutoff control signal faulty	System continues to run	-
4102xxxx	Warning	CRC error in the configuration	System continues to run	-
4103xxxx	Warning	Module type deviates	System continues to run	-
4104xxxx	Warning	Module version deviates	System continues to run	-
4106xxxx	Warning	Service data object not processed	System continues to run	-
4302xxxx	Info	Service data object not processed	System continues to run	-
4303xxxx	Info	Service data object not processed	System continues to run	-

Error No.	Error type	Logbook message	System behavior	Remedy
4304xxxx	Info	Service data object not processed	System continues to run	-
4305xxxx	Info	Service data object not processed	System continues to run	-
4306xxxx	Info	Service data object not processed	System continues to run	-
4307xxxx	Info	Service data object not processed	System continues to run	-
4309xxxx	Info	Service data object not processed	System continues to run	-
430Bxxxx	Error	Gateway address is outside of the permissible range	System stop; voltage OFF-ON required	-
4501xxxx	Warning	Data loss in the reception memory due to very high bus load	System continues to run	-
4502xxxx	Warning	CAN controller TEC or REC >= 96	System continues to run	-
4503xxxx	Warning	CAN controller TEC or REC > 127	System continues to run	-
4504xxxx	Warning	CAN controller TEC > 255	System continues to run	-
4505xxxx	Warning	Transmission of a message was faulty	System continues to run	-
4506xxxx	Warning	Data loss in transmit buffer due to overload	System continues to run	-
4507xxxx	Error	Initialization was faulty	System stop; voltage OFF-ON required	-
4508xxxx	Warning	Lifeguarding faulty	System continues to run	-
4601xxxx	Error	Faulty stack initialization	System stop; voltage OFF-ON required	-
4602xxxx	Error	A stack error occurred during runtime	System stop; voltage OFF-ON required	-
4603xxxx	Error	An AS protocol error occurred during runtime	System stop; voltage OFF-ON required	Read out the error log in the PLC and eliminate the corresponding protocol error
4604xxxx	Warning	An AS protocol error occurred during runtime	System continues to run	Read out the error log in the PLC and eliminate the corresponding protocol error

Error No.	Error type	Logbook message	System behavior	Remedy
4605xxxx	Warning	The description file is different, a timeout occurred or the PLC is not running.	System continues to run	Read out the error log in the PLC, check the cabling and the device description file, note the product code and revision in particular
50xxxxxx	Warning	Modbus/TCP error	System continues to run	-
51xxxxxx	Warning	PROFINET IO error	System continues to run	-
5201xxxx	Error	Too many Ethernet/IP connections	System continues to run	-
5202xxxx	Warning	Incorrect Ethernet/IP data format	System continues to run	-
5203xxxx	Warning	Incorrect Ethernet/IP data format	System continues to run	-
5204xxxx	Warning	Incorrect Ethernet/IP data size	System continues to run	-
5205xxxx	Warning	Incorrect Ethernet/IP command	System continues to run	-
5206xxxx	Warning	Ethernet/IP read error	System continues to run	-
5209xxxx	Warning	Incorrect Ethernet/IP data index	System continues to run	-
520C00xx	Error	Incorrect Ethernet/IP connection configuration	System continues to run	-
520Fxxxx	Warning	Ethernet/IP timeout	System continues to run	-
52xxxxxx	Warning	Ethernet/IP error	System continues to run	-
60000000	Info	Log file deleted	System continues to run	-
60000005	Info	Device is linked to a project file	-	-
60000010	Info	Time was reset	System continues to run	-
60000020	Info	IPv4 address and gateway	System continues to run	-
63xxxxxx	Warning	USB error	System continues to run	-
640A0001	Warning	SD card cannot be read	Configuration required	-
64xxxxxx	Warning	File system error on SD card	Configuration required	-
65xxxxxx	Warning	Ethernet error	System continues to run	-
68080003	Warning	Device is linked to another project file	-	-
68080005	Error	Incorrect activation code	-	-

Error No.	Error type	Logbook message	System behavior	Remedy
680A0001	Warning	Supply voltage A1 too low	Configuration required	-
680B0010	Error	Project file is not activated for this device	-	-
690Fxxxx	Warning	Communication interrupted	System continues to run	-
6A020001	Warning	Communication (Ethernet/USB) disrupted	System continues to run	-
6A04xxxx	Warning	Communication (Ethernet/USB) disrupted	System continues to run	-
6A06xxxx	Warning	TCP socket error	System continues to run	-
6A0Cxxxx	Warning	Connection failed on TCP socket	System continues to run	-
6Axxxxxx	Warning	Communication error (Ethernet/USB)	System continues to run	-
6B010001	Error	Cannot read project file project.xml	-	-
6B010002	Error	Cannot write project.xml	-	-
6B010010	Error	Cannot read metadata.xml	-	-
6B03000x	Error	Project file faulty	Configuration required	-
6B04xxxx	Warning	Project file faulty	Configuration required	-
6B0x001x	Error	metadata.xml faulty	-	-
6Bxxxxxx	Warning	File error	Configuration required	-