Leuze electronic

the sensor people

BCL508i

Barcode reader

TECHNICAL DESCRIPTION

GB 01-10/08 50108329

ПРОМЭЛЕКТРОНИКА / sales@prom-elec.com

Leuze electronic

Leuze electronic GmbH + Co. KG
P.O. Box 1111, D-73277 Owen / Teck
Tel. +49(0)7021/573-0,
Fax +49(0)7021/573-199
info@leuze.de • www.leuze.com

Sales and Service

Germany

Sales Region North
Phone 07021/573-306
Fax 07021/9850950

Postal code areas
20000-38999
40000-65999
97000-97999

Sales Region South
Phone 07021/573-307
Fax 07021/9850911

Postal code areas
66000-96999

Sales Region East
Phone 035027/629-106
Fax 035027/629-107

Postal code areas
01000-19999
39000-39999
98000-99999

Worldwide

AR (Argentina)
Nortécnica S. R. L.
Tel. Int. + 54 1147 57-3129
Fax Int. + 54 1147 57-1088

AT (Austria)
Schmachtl GmbH
Tel. Int. + 43 732 76460
Fax Int. + 43 732 785036

AU + NZ (Australia + New Zealand)
Balluff-Leuze Pty. Ltd.
Tel. Int. + 61 3 9720 4100
Fax Int. + 61 3 9738 2677

BE (Belgium)
Leuze electronic nv/sa
Tel. Int. + 32 2253 16-00
Fax Int. + 32 2253 15-36

BG (Republic of Bulgaria)
ATICS
Tel. Int. + 359 2 847 6244
Fax Int. + 359 2 847 6244

BR (Brasil)
Leuze electronic Ltda.
Tel. Int. + 55 11 5180-6130
Fax Int. + 55 11 5181-3597

BY (Republic of Belarus)
Logoprom ODO
Tel. Int. + 375 017 235 2641
Fax Int. + 375 017 230 8614

CH (Switzerland)
Leuze electronic AG
Tel. Int. + 41 44 834 02-04
Fax Int. + 41 44 833 26-26

CL (Chile)
Imp. Tec. Vignola S.A.I.C.
Tel. Int. + 56 3235 11-11
Fax Int. + 56 3235 11-28

CN (People's Republic of China)
Leuze electronic Trading
(Shenzhen) Co. Ltd.
Tel. Int. + 86 755 862 64909
Fax Int. + 86 755 862 64901

CO (Colombia)
Componentes Electronicas Ltda.
Tel. Int. + 57 4 3511049
Fax Int. + 57 4 3511019

CZ (Czech Republic)
Schmachtl CZ s.r.o.
Tel. Int. + 420 244 0015-00
Fax Int. + 420 244 9107-00

DK (Denmark)
Desim Elektronik APS
Tel. Int. + 45 7022 00-66
Fax Int. + 45 7022 22-20

ES (Spain)
Leuze electronic S.A.
Tel. Int. + 34 93 4097900
Fax Int. + 34 93 4903515

FI (Finland)
SKS-automaatio Oy
Tel. Int. + 358 20 764-61
Fax Int. + 358 20 764-6820

FR (France)
Leuze electronic sarl.
Tel. Int. + 33 160 0512-20
Fax Int. + 33 160 0503-65

GB (United Kingdom)
Leuze Mayser electronic Ltd.
Tel. Int. + 44 14 8040 85-00
Fax Int. + 44 14 8040 38-08

GR (Greece)
UTECO A.B.E.E.
Tel. Int. + 30 211 1206 900
Fax Int. + 30 211 1206 999

HK (Hong Kong)
Sensortech Company
Tel. Int. + 852 26510188
Fax Int. + 852 26510388

HR (Croatia)
Tipteh Zagreb d.o.o.
Tel. Int. + 385 1 381 6574
Fax Int. + 385 1 381 6577

HU (Hungary)
Kvalix Automatika Kft.
Tel. Int. + 36 272 2242
Fax Int. + 36 272 2244

ID (Indonesia)
P.T. Yabestindo Mitra Utama
Tel. Int. + 62 21 92861859
Fax Int. + 62 21 6451044

IL (Israel)
Galoz electronics Ltd.
Tel. Int. + 972 3 9023456
Fax Int. + 972 3 9021990

IN (India)
Global-Tech (India) Pvt. Ltd.
Tel. Int. + 91 20 24470085
Fax Int. + 91 20 24470086

IR (Iran)
Tavan Ressan Co. Ltd.
Tel. Int. + 98 21 2606766
Fax Int. + 98 21 2002883

IT (Italy)
Leuze electronic S.r.l.
Tel. Int. + 39 02 26 1106-43
Fax Int. + 39 02 26 1106-40

JP (Japan)
C. illies & Co., Ltd.
Tel. Int. + 81 3 3443 4143
Fax Int. + 81 3 3443 4118

KE (Kenia)
Profa-Tech Ltd.
Tel. Int. + 254 20 828095/6
Fax Int. + 254 20 828129

KR (South Korea)
Leuze electronic Co., Ltd.
Tel. Int. + 82 31 3828228
Fax Int. + 82 31 3828522

KZ (Republic of Kazakhstan)
KazPromAutomatics Ltd.
Tel. Int. + 7 7212 50 11 50
Fax Int. + 7 7212 50 11 50

MK (Macedonia)
Tipteh d.o.o. Skopje
Tel. Int. + 389 70 399 474
Fax Int. + 389 23 174 197

MX (Mexico)
Leuze Lumiflex México, S.A. de C.V.
Tel. Int. + 52 8183 7186-16
Fax Int. + 52 8183 7185-88

MY (Malaysia)
Ingermark (M) SDN.BHD
Tel. Int. + 60 360 3427-88
Fax Int. + 60 360 3421-88

NG (Nigeria)
SABROW HI-TECH E. & A. LTD.
Tel. Int. + 234 80333 86366
Fax Int. + 234 80333 84463518

NL (Netherlands)
Leuze electronic BV
Tel. Int. + 31 418 65 35-44
Fax Int. + 31 418 65 38-08

NO (Norway)
Elteco A/S
Tel. Int. + 47 35 56 20-70
Fax Int. + 47 35 56 20-99

PL (Poland)
Balluff Sp. z o. o.
Tel. Int. + 48 71 338 49 29
Fax Int. + 48 71 338 49 30

PT (Portugal)
LA2P, Lda.
Tel. Int. + 351 214 447070
Fax Int. + 351 214 447075

RO (Romania)
O'BOYLE s.r.l
Tel. Int. + 40 2 56201346
Fax Int. + 40 2 56221036

RS (Republic of Serbia)
Tipteh d.o.o. Beograd
Tel. Int. + 381 11 3131 057
Fax Int. + 381 11 3018 326

RU (Russian Federation)
Leuze electronic OOO
Tel. Int. + 7 495 933 75 05
Fax Int. + 7 495 933 75 05

SE (Sweden)
Leuze electronic AB
Tel. + 46 8 7315190
Fax + 46 8 7315105

SG + PH (Singapore + Philippines)
Balluff Asia pte Ltd
Tel. Int. + 65 6252 43-84
Fax Int. + 65 6252 90-60

SI (Slovenia)
Tipteh d.o.o.
Tel. Int. + 386 1200 51-50
Fax Int. + 386 1200 51-51

SK (Slowakia)
Schmachtl SK s.r.o.
Tel. Int. + 421 2 58275600
Fax Int. + 421 2 58275601

TH (Thailand)
Industrial Electrical Co. Ltd.
Tel. Int. + 66 2 6426700
Fax Int. + 66 2 6424249

TR (Turkey)
Balluff Sensör Ltd. Sti.
Tel. Int. + 90 212 3200411
Fax Int. + 90 212 3200416

TW (Taiwan)
Great Cofue Technology Co., Ltd.
Tel. Int. + 886 2 29 83 80-77
Fax Int. + 886 2 29 85 33-73

UA (Ukraine)
SV Altera OOO
Tel. Int. + 38 044 4961888
Fax Int. + 38 044 4961818

US + CA (United States + Canada)
Leuze electronic, Inc.
Tel. Int. + 1 248 486-4466
Fax Int. + 1 248 486-6699

ZA (South Africa)
Countapulse Controls (PTY.) Ltd.
Tel. Int. + 27 116 1575-56
Fax Int. + 27 116 1575-13

04/2008

© All rights reserved, especially the right of reproduction, distribution and translation. Copying or reproductions in any form require the written consent of the manufacturer.
Changes reflecting technical improvements may be made.

The main menus

```
BCL508i SF 102
Leuze electronic
     GmbH & Co. KG
SW: V 1.4  HW:1
SN: 0704-081894 001
```

Device information - main menu

Information about
- Device type
- Software version
- Hardware version
- Serial number

```
Network settings
Channel 1:
Addr:     192.168.60.101
Mask:     255.255.255.0
Gateway: 0.0.0.0
```

Network settings - main menu

- Display of the network settings

See "Ethernet" on page 94.

```
IO1 IO2  IO3
IO4 ATT ERR
                31
          12345678
```

Barcode reading window - main menu

Visualisation of the read barcode information.
See "Indicators in the display" on page 82.

```
Parameter
  Parameter handling
  Decoder table
  Digital SWIO
  Ethernet
```

Parameter - main menu

Configuration of the barcode reader.
See "Parameter menu" on page 87.

```
Language selection
o Deutsch
o English
o Español
o Français
o Italiano
```

Language selection - main menu

Selection of the display language.
See "Language selection menu" on page 96.

```
Service

  Diagnostics
  Status messages
```

Service - main menu

Scanner diagnosis and status messages.
See "Service menu" on page 96.

```
Actions
o Start decoding
o Start alignment
o Start auto-setup
o Start teach-in
```

Actions main menu

Various functions for scanner configuration and manual operation.
See "Actions menu" on page 97.

Device buttons:

- Navigate **upward/laterally**
- Navigate **downward/laterally**
- ESC **ESCAPE** leave
- **ENTER** confirm

Input of values

```
12|
 <-|0123456789    save
Standard ----- Unit
   126  |    |
```

- ← + ↵ Delete digit
- 0...9 + ↵ Enter digit
- save + ↵ Save input

PWR

PWR LED

Off	Device OFF
Flashes green	Device ok, initialisation phase
Green, continuous light	Device OK
Orange, continuous light	Service mode
Flashes red	Device ok, warning set
Red, continuous light	Device error

BUS

BUS LED

Off	No supply voltage
Flashes green	Initialisation
Green, continuous light	Operation OK
Flashes orange	Timeout
Flashes red	Communication error
Red, continuous light	Network error

1 General information ... 9

1.1 Explanation of symbols ... 9

1.2 Declaration of conformity ... 9

2 Safety notices ... 10

2.1 General safety notices ... 10

2.2 Safety standards ... 10

2.3 Approved purpose ... 10

2.4 Working safely ... 11

3 Fast commissioning / operating principle ... 13

3.1 Mounting the BCL 508*i* ... 13

3.2 Device arrangement and selection of the mounting location ... 13

3.3 Electrical connection of the BCL 508*i* ... 14

3.4 Starting the device ... 15

3.4.1 Manually setting the IP address ... 15

3.4.2 Automatically setting the IP address ... 17

3.5 Defining Ethernet host communication ... 17

3.5.1 TCP/IP ... 18

3.5.2 UDP ... 18

3.6 Further settings ... 19

3.7 Barcode reading ... 20

4 Device description ... 21

4.1 About the barcode readers of the BCL 500*i* series ... 21

4.2 Characteristics of the barcode readers of the BCL 500*i* series ... 21

4.3 Device construction ... 24

4.4 Reading techniques ... 25

4.4.1 Line scanner (single line) ... 25

4.4.2 Line scanner with oscillating mirror ... 26

4.4.3 Omnidirectional reading ... 27

4.5 Fieldbus systems ... 28

4.5.1 Ethernet ... 28

4.5.2 Ethernet – star topology ... 28

4.5.3 Ethernet – linear topology ... 29

4.6 Heater ... 29

4.7 External parameter memory 29

4.8 autoReflAct 31

4.9 Reference codes 31

4.10 autoConfig 32

5 Specifications 33

5.1 General specifications of the barcode readers 33
5.1.1 Line scanner 33
5.1.2 Oscillating-mirror scanner 34
5.1.3 Line scanner with deflection mirror 35

5.2 Heating models of the barcode readers 35
5.2.1 Line scanner with heating 36
5.2.2 Oscillating-mirror scanner with heating 37
5.2.3 Line scanner with deflection mirror and heating 37

5.3 Dimensioned drawings 39
5.3.1 Line scanner with / without heating 39
5.3.2 Deflection mirror scanner with / without heating 40
5.3.3 Oscillating-mirror scanner with / without heating 41

5.4 Type overview BCL 508*i* 42

5.5 Reading field curves / optical data 43

5.6 Reading field curves 44
5.6.1 High Density (N) Optics: BCL 508*i* SN 100/102 45
5.6.2 High Density (N) Optics: BCL 508*i* ON 100 46
5.6.3 Medium Density (M) Optics: BCL 508*i* SM 100/102 47
5.6.4 Medium Density (M) Optics: BCL 508*i* OM 100 48
5.6.5 Low Density (F) Optics: BCL 508*i* SF 100/102 49
5.6.6 Low Density (F) Optics: BCL 508*i* OF 100 50
5.6.7 Ultra Low Density (L) Optics: BCL 508*i* SL 102 51
5.6.8 Ultra Low Density (L) Optics: BCL 508*i* OL 100 52

5.7 Reading field curves for heating devices 53
5.7.1 High Density (N) Optics: BCL 508*i* SN 102 H 53
5.7.2 High Density (N) Optics: BCL 508*i* SN 100 H 54
5.7.3 High Density (N) Optics: BCL 508*i* ON 100 H 55
5.7.4 Medium Density (M) Optics: BCL 508*i* SM 102 H 56
5.7.5 Medium Density (M) Optics: BCL 508*i* SM 100 H 57
5.7.6 Medium Density (M) Optics: BCL 508*i* OM 100 H 58
5.7.7 Low Density (F) Optics: BCL 508*i* SF 102 H 59
5.7.8 Low Density (F) Optics: BCL 508*i* SF 100 H 60
5.7.9 Low Density (F) Optics: BCL 508*i* OF 100 H 61
5.7.10 Ultra Low Density (L) Optics: BCL 508*i* SL 102 H 62
5.7.11 Ultra Low Density (L) Optics: BCL 508*i* OL 100 H 63

6 Installation and mounting ... 64

6.1 Storage, transportation ... 64

6.2 Mounting the BCL 508*i* ... 65
6.2.1 Fastening with M4 x 6 screws ... 65
6.2.2 BT 56 mounting device ... 66

6.3 Device arrangement ... 67
6.3.1 Selecting a mounting location ... 67
6.3.2 Avoiding total reflection – Line scanner ... 68
6.3.3 Avoiding total reflection – oscillating/deflection-mirror scanner ... 68
6.3.4 Mounting location ... 69
6.3.5 Devices with integrated heating ... 69
6.3.6 Maximum permissible read angles between BCL 508*i* and barcode ... 70

6.4 Attaching laser warning sign ... 70

6.5 Cleaning ... 70

7 Electrical connection ... 71

7.1 Safety notices for the electrical connection ... 72

7.2 Electrical connection of the BCL 508*i* ... 73
7.2.1 PWR – Voltage supply and switching input/outputs 3 and 4 ... 74
7.2.2 SERVICE – USB interface (type A) ... 76
7.2.3 SW IN/OUT – Switching input/switching output ... 76
7.2.4 HOST / BUS IN for BCL 508*i* ... 78
7.2.5 BUS OUT for the BCL 508*i* ... 79

7.3 Ethernet topologies ... 80
7.3.1 Ethernet wiring ... 81

7.4 Line lengths and shielding ... 81

8 Display and control panel ... 82

8.1 Structure of the control panel ... 82

8.2 Status display and operation ... 82
8.2.1 Indicators in the display ... 82
8.2.2 LED status indicators ... 83
8.2.3 Control buttons ... 85

8.3 Menu description ... 86
8.3.1 The main menus ... 86
8.3.2 Parameter menu ... 87
8.3.3 Language selection menu ... 96
8.3.4 Service menu ... 96
8.3.5 Actions menu ... 97

8.4 Operation ... 99

9 Leuze webConfig tool ... 100

9.1 Connecting the SERVICE USB interface ... 100

9.2 Installing the required software ... 100

9.2.1 System requirements ... 100

9.2.2 Installing the USB driver ... 101

9.3 Starting the webConfig tool ... 102

9.4 Short description of the webConfig tool ... 103

9.4.1 Module overview in the Configuration menu ... 103

10 Commissioning and configuration ... 105

10.1 Measures to be performed prior to the initial commissioning ... 106

10.2 Starting the device ... 106

10.3 Setting the communication parameters ... 106

10.3.1 Manually setting the IP address ... 107

10.3.2 Automatically setting the IP address ... 108

10.3.3 Ethernet host communication ... 109

10.3.4 TCP/IP ... 109

10.3.5 UDP ... 111

10.4 Additional settings for the BCL 508*i* ... 112

10.4.1 Decoding and processing the read data ... 112

10.4.2 Control of the decoding ... 113

10.4.3 Control of the switching outputs ... 114

10.5 Transmitting configuration data ... 115

10.5.1 Via the webConfig tool ... 115

10.5.2 With the external parameter memory ... 115

11 Online commands ... 118

11.1 Overview of commands and parameters ... 118

11.1.1 General 'online' commands ... 119

11.1.2 ’Online’ commands for system control ... 126

11.1.3 ’Online’ commands for the parameter set operations ... 127

12 Diagnostics and troubleshooting ... 134

12.1 General causes of errors ... 134

12.2 Interface errors ... 134

13 Type overview and accessories ... 136

13.1 Type key ... 136

13.2 Type overview BCL 508*i* 136
13.3 Accessory connectors 137
13.4 Accessory USB cable 137
13.5 Accessory external parameter memory 137
13.6 Accessory mounting device 138
13.7 Accessory ready-made cables for voltage supply 138
13.7.1 Contact assignment of PWR connection cable 138
13.7.2 Specifications of the cables for voltage supply 138
13.7.3 Order codes of the cables for voltage supply 138
13.8 Accessory ready-made cables for bus connection 139
13.8.1 General information 139
13.8.2 Contact assignments M12 Ethernet connection cables KB ET… 139
13.8.3 Technical data of the M12 Ethernet connection cables KB ET… 139
13.8.4 Order codes for M12 Ethernet connection cables KB ET… 140

14 Maintenance 141
14.1 General maintenance information 141
14.2 Repairs, servicing 141
14.3 Disassembling, packing, disposing 141

15 Appendix 142
15.1 Declaration of conformity 142
15.2 ASCII character set 143
15.3 Barcode samples 147
15.3.1 Module 0.3 147
15.3.2 Module 0.5 148

Figure 2.1: Attachment of the stick-on labels with warning notices at the BCL 508*i* ... 12
Figure 3.1: Connections of the BCL 508*i* ... 14
Figure 4.1: Line scanner, line scanner with deflection mirror and oscillating-mirror scanner ... 21
Figure 4.2: Possible barcode orientation ... 23
Figure 4.3: Device construction ... 24
Figure 4.4: Deflection principle for the line scanner ... 25
Figure 4.5: Deflection principle for the line scanner with oscillating mirror add-on ... 26
Figure 4.6: Principle arrangement for omnidirectional reading ... 27
Figure 4.7: Ethernet with star topology ... 28
Figure 4.8: Ethernet with linear topology ... 29
Figure 4.9: External parameter memory ... 30
Figure 4.10: Reflector arrangement for autoReflAct ... 31
Table 5.1: Specifications of the BCL 508*i* line scanners without heating ... 33
Table 5.2: Specifications of the BCL 508*i* oscillating-mirror scanners without heating ... 34
Table 5.3: Specifications of the BCL 508*i* deflection-mirror scanners without heating ... 35
Table 5.4: Specifications of the BCL 508*i* line scanners with heating ... 36
Table 5.5: Specifications of the BCL 508*i* oscillating-mirror scanners with heating ... 37
Table 5.6: Specifications of the BCL 508*i* deflection-mirror scanners with heating ... 38
Figure 5.1: Dimensioned drawing BCL 508*i* line scanner S…102 ... 39
Figure 5.2: Dimensioned drawing BCL 508*i* deflection-mirror scanner S…100 ... 40
Figure 5.3: Dimensioned drawing BCL 508*i* oscillating-mirror scanner O…100 ... 41
Table 5.7: Type overview BCL 508*i* ... 42
Figure 5.4: The most important characteristics of a barcode ... 43
Figure 5.5: Zero position of the reading distance ... 44
Table 5.8: Reading conditions ... 44
Figure 5.6: "High Density" reading field curve for line scanner (with/without deflection mirror) ... 45
Figure 5.7: "High Density" reading field curve for oscillating-mirror scanners ... 46
Figure 5.8: Lateral "High Density" reading field curve for oscillating-mirror scanners ... 46
Figure 5.9: "Medium Density" reading field curve for line scanner (with/without deflection mirror) ... 47
Figure 5.10: "Medium Density" reading field curve for oscillating-mirror scanners ... 48
Figure 5.11: Lateral "Medium Density" reading field curve for oscillating-mirror scanners ... 48
Figure 5.12: "Low Density" reading field curve for line scanner (with/without deflection mirror) ... 49
Figure 5.13: "Low Density" reading field curve for oscillating-mirror scanners ... 50
Figure 5.14: Lateral "Low Density" reading field curve for oscillating-mirror scanners ... 50
Figure 5.15: "Ultra Low Density" reading field curve for line scanner without deflection mirror ... 51
Figure 5.16: "Ultra Low Density" reading field curve for oscillating-mirror scanners ... 52
Figure 5.17: Lateral "Ultra Low Density" reading field curve for oscillating-mirror scanners ... 52
Figure 5.18: "High Density" reading field curve for line scanner with heating (without deflection mirror) ... 53
Figure 5.19: "High Density" reading field curve for line scanner with heating (with deflection mirror) ... 54
Figure 5.20: "High Density" reading field curve for oscillating-mirror scanners with heating ... 55
Figure 5.21: Lateral "High Density" reading field curve for oscillating-mirror scanners with heating ... 55
Figure 5.22: "Medium Density" reading field curve for line scanner with heating (without deflection mirror) ... 56

Figure 5.23: "Medium Density" reading field curve for line scanner with heating (with deflection mirror) ... 57
Figure 5.24: "Medium Density" reading field curve for oscillating-mirror scanners with heating ... 58
Figure 5.25: Lateral "Medium Density" reading field curve for oscillating-mirror scanners with heating ... 58
Figure 5.26: "Low Density" reading field curve for line scanner with heating (without deflection mirror) ... 59
Figure 5.27: "Low Density" reading field curve for line scanner with heating (with deflection mirror) ... 60
Figure 5.28: "Low Density" reading field curve for oscillating-mirror scanners with heating ... 61
Figure 5.29: Lateral "Low Density" reading field curve for oscillating-mirror scanners with heating ... 61
Figure 5.30: "Ultra Low Density" reading field curve for line scanner with heating (without deflection mirror) ... 62
Figure 5.31: "Ultra Low Density" reading field curve for oscillating-mirror scanners with heating ... 63
Figure 5.32: Lateral "Ultra Low Density" reading field curve for oscillating-mirror scanners with heating ... 63
Figure 6.1: Device name plate BCL 508*i* ... 64
Figure 6.2: Fastening options using M4x6 threaded holes ... 65
Figure 6.3: BT 56 mounting device ... 66
Figure 6.4: Mounting example BCL 508*i* ... 67
Figure 6.5: Total reflection – line scanner ... 68
Figure 6.6: Total reflection – BCL 508*i* with oscillating/deflection mirror ... 69
Figure 6.7: Reading angle for the line scanner ... 70
Figure 7.1: Location of the electrical connections ... 71
Figure 7.2: Connections of the BCL 508*i* ... 73
Table 7.1: Pin assignment PWR ... 74
Figure 7.1: Switching input connection diagram SWIO_3 and SWIO_4 ... 75
Figure 7.2: Switching output connection diagram SWIO_3 / SWIO_4 ... 75
Table 7.2: Pin assignments of SERVICE – USB interface ... 76
Table 7.3: Pin assignment SW IN/OUT ... 76
Figure 7.3: Switching input connection diagram SWIO_1 and SWIO_2 ... 77
Figure 7.4: Switching output connection diagram SWIO_1 / SWIO_2 ... 77
Table 7.4: Pin assignment HOST / BUS IN BCL 500*i* ... 78
Figure 7.5: HOST / BUS IN cable assignments on RJ-45 ... 78
Table 7.5: Pin assignment BUS OUT ... 79
Figure 7.6: Ethernet with star topology ... 80
Figure 7.7: Ethernet with linear topology ... 80
Table 7.6: Line lengths and shielding ... 81
Figure 8.1: Structure of the control panel ... 82
Table 8.1: Parameter handling submenu ... 87
Table 8.2: Decoder table submenu ... 88
Table 8.3: Digital SWIO submenu ... 91
Table 8.4: Ethernet submenu ... 94
Figure 9.1: Connecting the SERVICE USB interface ... 100
Figure 9.2: The start page of the webConfig tool ... 102
Figure 9.3: Module overview in the webConfig tool ... 103
Figure 10.1: Connections of the BCL 508*i* ... 106
Figure 10.2: Storing configuration data in the webConfig tool ... 115

Figure 10.3: Installing the external parameter memory ... 116
Figure 10.4: BCL 508*i* with installed parameter memory ... 116
Table 12.1: General causes of errors ... 134
Table 12.2: Interface error ... 134
Table 13.1: Type overview BCL 508*i* ... 136
Table 13.2: Connectors for the BCL 508*i* ... 137
Table 13.3: Cables for the BCL 508*i* ... 137
Table 13.4: External parameter memory for the BCL 508*i* ... 137
Table 13.5: Mounting devices for the BCL 508*i* ... 138
Table 13.6: PWR cables for the BCL 508*i* ... 138
Figure 13.7: Cable structure of Industrial Ethernet connection cable ... 139
Table 13.8: Bus connection cables for the BCL 508*i* ... 140
Figure 15.1: Barcode sample labels (module 0.3) ... 147
Figure 15.2: Barcode sample labels (module 0.5) ... 148

1 General information

1.1 Explanation of symbols

The symbols used in this technical description are explained below.

Attention!

This symbol precedes text messages which must strictly be observed. Failure to comply with this information results in injuries to personnel or damage to the equipment.

Attention Laser!

This symbol warns of possible danger caused by hazardous laser radiation.

Notice!

This symbol indicates text passages containing important information.

1.2 Declaration of conformity

The barcode readers of the BCL 500*i* series have been developed and manufactured in accordance with the applicable European standards and directives.

The BCL 500*i* series is "UL LISTED" according to American and Canadian safety standards, and fulfils the requirements of Underwriter Laboratories Inc. (UL).

Notice!

You can find the Declaration of Conformity of the devices in the appendix of the manual on page 142.

The manufacturer of the product, Leuze electronic GmbH & Co KG in D-73277 Owen/Teck, possesses a certified quality assurance system in accordance with ISO 9001.

2 Safety notices

2.1 General safety notices

Documentation

All entries in this technical description must be heeded, in particular the present chapter "Safety notices". Keep this technical description in a safe place. It should be available at all times.

Safety regulations

Observe the locally applicable regulations and the rules of the employer's liability insurance association.

Repair

Repairs must only be carried out by the manufacturer or an authorised representative.

2.2 Safety standards

The barcode readers of the BCL 500*i* series were developed, manufactured and tested in accordance with the applicable safety standards. They correspond to the state of the art.

2.3 Approved purpose

Attention!

The protection of personnel and the device cannot be guaranteed if the device is operated in a manner not complying with its intended use.

Barcode readers of the BCL 500*i* series are conceived as stationary, high-speed scanners with integrated decoders for all current barcodes used for automatic object detection.

In particular, unauthorised uses include:

- rooms with explosive atmospheres
- operation for medical purposes

Areas of application

The barcode readers of the BCL 500*i* series are especially designed for the following areas of application:

- Storage and conveying technologies, in particular for object identification on fast-moving conveyor belts
- Pallet transportation applications
- Automobile sector
- Omnidirectional reading

2.4 Working safely

Attention!

Access to or changes on the device, except where expressly described in this operating manual, are not authorised.

Safety regulations

Observe the locally applicable legal regulations and the rules of the employer's liability insurance association.

Qualified personnel

Mounting, commissioning and maintenance of the device must only be carried out by qualified personnel.
Electrical work must be carried out by a certified electrician.

Attention, laser radiation!

If you look into the beam path over a longer time period, the retina of your eye may be damaged!

Never look directly into the beam path!

Do not point the laser beam of the BCL 508i at persons!

When mounting and aligning the BCL 508i, avoid reflections of the laser beam off reflective surfaces!

The BCL 508i barcode readers comply with safety standards EN 60825-1 for a class 2 product. They also comply with the U.S. 21 CFR 1040.10 regulations for a class II laser product except for deviations pursuant to Laser Notice No. 50, dated July 26, 2001.

Radiant Energy: The BCL 508i uses a low power visible laser diode. The emitted wavelength is 655nm. The average laser power is less than 1mW in accordance with the definition of class 2 lasers.

Adjustments: Do not attempt any adjustments to or alterations of this product.

Do not remove the protective housing of the barcode reader. There are no user-serviceable parts inside.

The scanner window is the only aperture through which light may be observed on this product. A failure of the scanner motor, while the laser diode continues to emit a laser beam, may cause emission levels to exceed those for safe operation. The barcode reader has safeguards to prevent this occurrence. If, however, a stationary beam is emitted, the failing barcode reader should be disconnected from its power source immediately.

CAUTION: Use of controls or adjustments or performance of procedures other than specified herein may result in hazardous light exposure.

The use of optical instruments or devices in combination with the device increases the danger of eye damage!

The housing of the BCL 508i is provided with warning notices B and C above and next to the reading window as shown in the following figure:

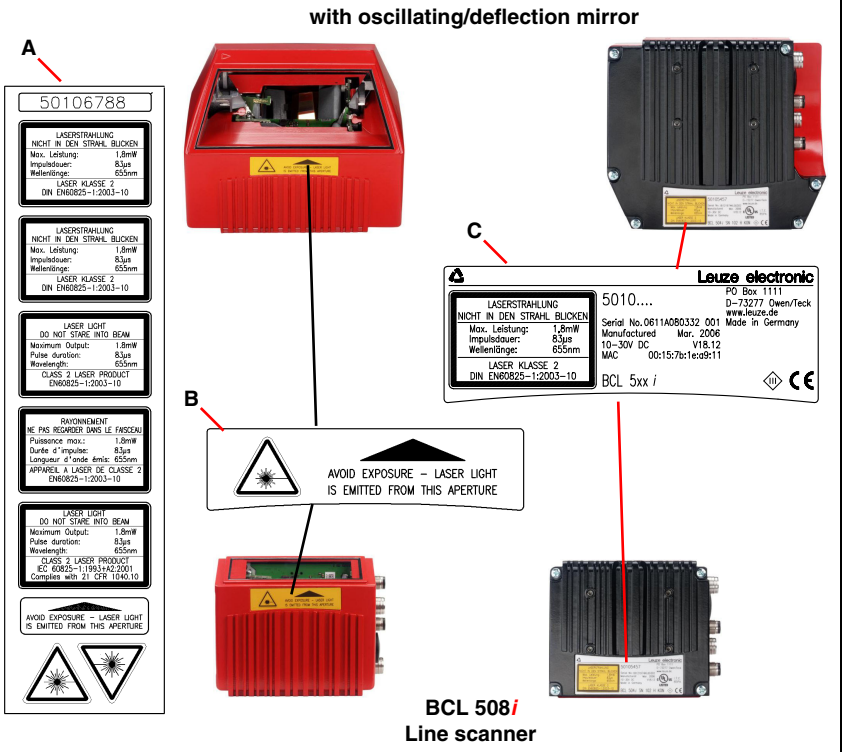

A	Included stick-on labels
B	Aperture label
C	Name plate

Figure 2.1: Attachment of the stick-on labels with warning notices at the BCL 508*i*

Notice!

It is important that you attach the stick-on labels supplied to the device (A in figure 2.1)! If the signs would be covered due to the installation situation of the BCL 508i, attach them instead in the immediate vicinity of the BCL 508i in such a way that it is not necessary to look into the laser beam when reading the notices!

3 Fast commissioning / operating principle

Below you will find a short description for the initial commissioning of the BCL 508*i*. Detailed explanations for all listed points can be found throughout this technical description.

3.1 Mounting the BCL 508*i*

The BCL 508*i* barcode readers can be mounted in two different ways:

- Using two M4x6 screws on the rear of the device or using four M4x6 screws on the bottom of the device.
- Using a BT 56 mounting device on the two fastening grooves.

3.2 Device arrangement and selection of the mounting location

In order to select the right mounting location, several factors must be considered:

- Size, orientation, and position tolerance of the barcodes on the objects to be scanned.
- The reading field of the BCL 508*i* in relation to the barcode module width.
- The resulting minimum and maximum reading distance from the respective reading field (see chapter 5.5 "Reading field curves / optical data").
- The permissible line lengths between the BCL 508*i* and the host system depending on which interface is used.
- The correct time for data output. The BCL 508*i* should be positioned in such a way that, taking into consideration the time required for data processing and the conveyor belt speed, there is sufficient time to e.g. initiate sorting operations on the basis of the read data.
- The display and control panel should be very visible and accessible.
- For configuring and commissioning with the webConfig tool, the USB interface should be easily accessible.

For specific information, please refer to chapter 4.4.

Notice!

The beam exits the BCL 508i as follows for the respective devices:
*- line scanner **parallel** to the **housing base***
*- oscillating mirror and deflection mirror **perpendicular** to the **housing base***
The black areas in figure 6.1 are the housing base. The best read results are obtained when:

- *The BCL 508i is mounted in such a way that the scanning beam is incident on the barcode at an angle of inclination greater than ±10° … 15° to vertical.*
- *The reading distance lies in the middle area of the reading field.*
- *The barcode labels are of good print quality and have good contrast ratios.*
- *You do not use high-gloss labels.*
- *There is no direct sunlight.*

3.3 Electrical connection of the BCL 508*i*

The BCL 508*i* is equipped with four M12 plugs/sockets which are A- and D-coded, and an USB socket of Type A.

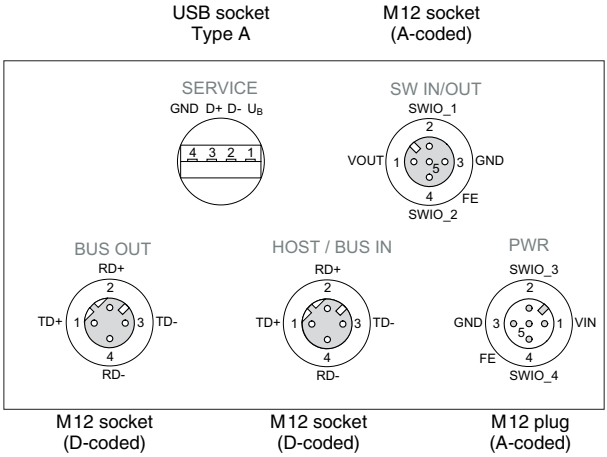

Figure 3.1: Connections of the BCL 508*i*

Voltage supply and switching inputs/outputs

The **voltage supply** (10 … 30VDC) is connected at the **PWR** M12 connector.

Available at both the **PWR** M12 connector as well as at the **SW IN/OUT** M12 socket are **four freely programmable switching inputs/outputs** for custom adaptation to the respective application. Detailed information on this topic can be found in chapter 7.2.

Standalone operation in Ethernet network

During stand-alone operation of the BCL 508*i*, the host interface of the primary system is connected to HOST/BUS IN. Thus, a star structure (Ethernet structure) is possible. Please be certain to select the correct protocol for the connected components.

Network operation in Ethernet network

In network operation, the primary system (PC/PLC) is connected to the host interface of the BCL 508*i*. With the aid of the "switch" integrated in the BCL 508*i*, the bus connection to the next participant, e.g. a BCL 508*i*, can occur directly via the BUS OUT socket!

Notice!

The BCL 508i does not have its own built-in DHCP server. Please make certain that each participant in the Ethernet has its own unique IP address. This can be set by a DHCP server in the primary system or through manual address assignment.

3.4 Starting the device

Connect the supply voltage +10 … 30 VDC (typ. +24 VDC); the BCL 508i starts up and the barcode reading window appears on the display:

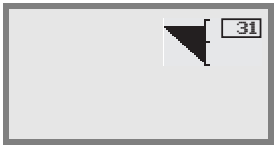

By default, parameter enabling is deactivated and you cannot change any settings. If you wish to carry out the configuration via the display, you must activate parameter enabling. Further information can be found in chapter "Parameter enabling" on page 99.

As a first step, you need to set the communication parameters of the BCL 508i.

You can make the necessary settings via the display or via the webConfig tool. Provided here is only a brief description of the settings via the webConfig tool; detailed information can be found in chapter 10.

3.4.1 Manually setting the IP address

If your system does not include a DHCP server or if the IP addresses of the devices are to be set permanently, proceed as follows:

Have the network administrator specify the data for IP address, net mask and gateway address of the BCL 508i.

Set these values on the BCL 508i:

Via webConfig:

```
Configuration -> Communication -> Ethernet interface
```

Notice!

*If the setting is performed via the webConfig tool, the BCL 508i must be **restarted**. Only after this restart is the set IP address accepted and does it become active.*

Or, alternatively, via the display

↳ *In the main menu, use the ▲▼ buttons to select the Parameter menu and use the enter button ↵ to activate the Parameter menu. The following screen appears:*

```
Parameter                1
  Parameter handling
  Decoder table
  Digital SWIO
o Ethernet
```

In the parameter menu, use the ▲▼ buttons to select the `Ethernet` menu item.

↵

Press the enter button to enter the `Ethernet` menu.

```
Ethernet

o Ethernet interface
  HOST communication
```

Use the ▲▼ buttons to select the `Ethernet interface` menu item.

↵

Press the enter button to enter the `Ethernet interface` menu.

```
Ethernet interface
o IP address
  Gateway
  Net mask
  DHCP activated
```

Use the ▲▼ buttons to successively select the `IP address`, `Gateway` and `Net mask` menu items and set the desired values.

ESC

Exit the Ethernet menu with the ESCAPE button.

```
Configuration changed:
System must be
restarted

   ok
   cancel
```

The message shown at the side appears. Confirm with `OK` to initiate a restart and activate the changed configuration.

3.4.2 Automatically setting the IP address

If your system includes a DHCP server that is to be used to assign the IP addresses, proceed as follows:

↳ *From the main menu, navigate as described in chapter 3.4.1 with the ▲▼ buttons and the enter button ↵ to the Ethernet interface menu:*

```
Ethernet interface
  IP address
  Gateway
  Net mask
o DHCP activated
```

Use the ▲▼ buttons to select the `DHCP activated` menu item.

Press the enter button to enter the `DHCP activated` menu.

```
DHCP activated
o Off
  On

Standard ----- Unit
   OFF  |    |
```

Use the ▲▼ buttons to select `On` and press the enter button.

Exit the Ethernet menu with the ESCAPE button.

```
Configuration changed:
System must be
restarted

   ok
   cancel
```

The message shown at the side appears. Confirm with `OK` to initiate a restart and to activate the changed configuration.

3.5 Defining Ethernet host communication

The Ethernet host communication enables the configuration of connections to an external host system. Both UDP as well as TCP/IP (in either client or server mode) can be used. The connection-free UDP protocol is used primarily to transfer process data to the host (monitor operation). The connection-oriented TCP/IP protocol can also be used to transfer commands from the host to the device. With this connection, the data is backed up by the TCP/IP protocol itself.

If you would like to use the TCP/IP protocol, you must also define whether the BCL 508*i* is to operate as a TCP client or as a TCP server.

Both protocols can be activated simultaneously and used in parallel.

↳ *Contact your network administrator to determine which communication protocol is used.*

3.5.1 TCP/IP

↳ *Activate the TCP/IP protocol*

↳ *Set the TCP/IP mode of the BCL 508i*

In **TCP client mode**, the BCL 508*i* actively establishes the connection to the primary host system (PC / PLC as server). The BCL 508*i* requires from the user the IP address of the server (host system) and the port number on which the server (host system) accepts a connection. In this case, the BCL 508*i* determines when and with whom a connection is established!

↳ *With a BCL 508i as TCP client, also set the following values:*

- IP address of the TCP server (normally the PLC/host computer)
- Port number of the TCP server
- Timeout for the wait time for an answer from the server
- Repetition time for renewed communication attempt following a timeout

In **TCP server mode**, the primary host system (PC / PLC) actively establishes the connection and the connected BCL 508*i* waits for the connection to be setup. The TCP/IP stack requires information from the user regarding the local port of the BCL 508*i* (port number) on which the connection requests of a client application (host system) are to be accepted. If there is a connection request and a connection is established by the primary host system (PC / PLC as client), the BCL 508*i* (server mode) accepts the connection. Data can then be sent and received.

↳ *With a BCL 508i as TCP server, also set the following values:*

- Port number for the communication of the BCL 508*i* with the TCP client

The corresponding adjustment options can be found:

- Via webConfig:
  `Configuration -> Communication -> Host communication`

3.5.2 UDP

The BCL 508*i* requires from the user the IP address and the port number of the communication partner. Correspondingly, the host system (PC / PLC) now also requires the set IP address of the BCL 508*i* and the selected port number. By assigning these parameters, a socket is formed via which the data can be sent and received.

↳ *Activate the UDP protocol*

↳ *Also set the following values:*

- IP address of the communication partner
- Port number of the communication partner

The corresponding adjustment options can be found:

- Via webConfig:
  `Configuration -> Communication -> Host communication`

3.6 Further settings

After the basic configuration of the operating mode and the communication parameters, you need to carry out further settings:

- Decoding and processing the read data

  ↳ *Define at least one code type with the desired settings.*

  - Via webConfig:
    `Configuration -> Decoder`

- Control of the decoding

  ↳ *Configure the connected switching inputs according to your requirements. To do this, first set the I/O mode to Input and then configure the switching behaviour:*

  - Via webConfig:
    `Configuration -> Device -> Switching inputs/outputs`

- Control of the switching outputs

  ↳ *Configure the connected switching outputs according to your requirements. To do this, first set the I/O mode to Output and then configure the switching behaviour:*

  - Via webConfig:
    `Configuration -> Device -> Switching inputs/outputs`

3.7 Barcode reading

With the aid of the "Action menu", you can instruct the BCL 508*i* to read a barcode.

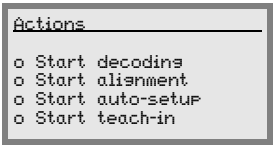

In the main menu, use the ▲▼ buttons to select the Actions menu item. Activate the Actions menu with ↵. Then select Start decoding with ▲▼ and press ↵ again to start the barcode reading operation.

To test, you can use the following barcode in the 2/5 Interleaved format. The barcode module here is 0.5:

Modul 0,5

The read information appears in the display and is simultaneously passed on to the primary system (PLC or PC).

Please check the incoming data of the barcode information there.

Alternatively, you can connect a photoelectric sensor or a 24 V DC switching signal to the SW IN/OUT socket for read activation. To do this, however, you must appropriately configure the switching input (see chapter 7.2.3 "SW IN/OUT – Switching input/switching output").

4 Device description

4.1 About the barcode readers of the BCL 500*i* series

Barcode readers of the BCL 500*i* series are high-speed scanners with integrated decoder for all commonly used barcodes, e.g. 2/5 Interleaved, Code 39, Code 128, EAN 8/13 etc., as well as codes from the RSS family.

Barcode readers of the BCL 500*i* series are available in various optics models as well as line scanners, line scanners with deflection mirrors, oscillating mirrors and also optionally as heated models.

Figure 4.1: Line scanner, line scanner with deflection mirror and oscillating-mirror scanner

The extensive options for device configuration via display or software enable adaptation to a multitude of reading tasks. Due to the large reading distance combined with the great depth of field and a very compact construction, the device is ideally suited for package and pallet transportation systems. In general, the barcode readers of the BCL 500*i* series are designed for the conveyor and storage technology market.

The interfaces (**RS 232**, **RS 485** and **RS 422**) integrated in the various device models and the fieldbus systems (**PROFIBUS DP**, **ProfiNet** and **Ethernet**) of the barcode readers of the BCL 500*i* series offer optimum connection to the primary host system.

4.2 Characteristics of the barcode readers of the BCL 500*i* series

Performance features:

- Integrated fieldbus connectivity = *i* -> Plug-and-Play fieldbus coupling and easy networking
- Numerous interface variants facilitate connection to the primary systems
  - RS 232, RS 422 as well as with integrated multiNet plus master

  - RS 485 and multiNet plus slave

  alternatively, various fieldbus systems, such as
  - PROFIBUS DP
  - PROFINET
  - Ethernet
- Integrated code fragment technology (**CRT**) enables the identification of soiled or damaged barcodes
- Maximum depth of field and reading distances from 200 mm to 1600 mm
- Large optical opening angle and, thus, large reading field width
- High scanning rate from 800 - 1200 scans/s for fast reading tasks
- Intuitive, backlit, multi-language display with user-friendly menu navigation
- Integrated **USB 1.1** service interface
- Adjustment of all device parameters with a web browser
- Connection options for an external parameter memory
- Easy alignment- and diagnosis functions
- M12 connections with Ultra-Lock™ technology
- Four freely programmable switching inputs/outputs for the activation or signalling of states
- Automatic monitoring of the read quality with **autoControl**
- Automatic recognition and setting of the barcode type using **autoConfig**
- Reference code comparison
- Optional heating models to -35 °C
- Heavy-duty housing of protection class IP 65

Notice!

Information on technical data and characteristics can be found in chapter 5.

General information

The integrated fieldbus connectivity = ***i*** contained in the barcode readers of the BCL 500***i*** series facilitates the use of identification systems which function without connector unit or gateways. The integrated fieldbus interface considerably simplifies handling. The Plug-and-Play concept enables easy networking and very simple commissioning: Directly connect the respective fieldbus and all configuration is performed with no additional software.

For decoding barcodes, the barcode readers of the BCL 500***i*** series make available the proven **CRT decoder** with code fragment technology:

The proven code fragment technology (**CRT**) enables barcode readers of the BCL 500***i*** series to read barcodes with a small bar height, as well as barcodes with a damaged or soiled print image.

With the aid of the **CRT decoder**, barcodes can also be read without problem in other demanding situations, such as with a large tilt angle (azimuth angle or even twist angle).

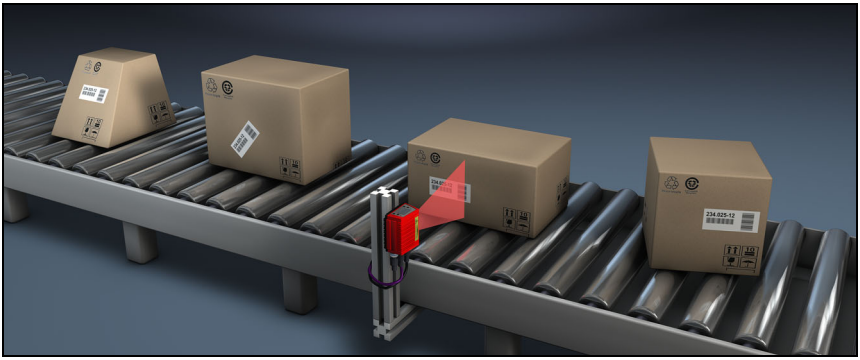

Figure 4.2: Possible barcode orientation

The BCL 508*i* can be operated and configured using the integrated webConfig tool via the USB service interface; alternatively, the barcode readers can be adjusted using configuration commands via the host/service interface.

The BCL 508*i* needs a suitable activation to start a read process as soon as an object is in the reading field. This opens a time window ("reading gate") in the BCL 508*i* for the read process during which the barcode reader has time to detect and decode a barcode.

In the basic setting, triggering takes place through an external reading cycle signal. Alternative activation options include online commands via the host interface and the **autoReflAct** function.

Through the read operation, the BCL 508*i* collects additional useful pieces of data for diagnosis which can also be transmitted to the host. The quality of the read operation can be inspected using the **alignment mode** which is integrated in the webConfig tool.

A multi-language display with buttons is used to operate the BCL 508*i* as well as for visualisation purposes. Two LEDs provide additional optical information on the current operating state of the device.

The four freely configurable switching inputs/outputs "SWIO 1 … SWIO 4" can be assigned various functions and control e.g. activation of the BCL 508*i* or external devices, such as a PLC.

System, warning and error messages provide assistance in set-up/troubleshooting during commissioning and read operation.

4.3 Device construction

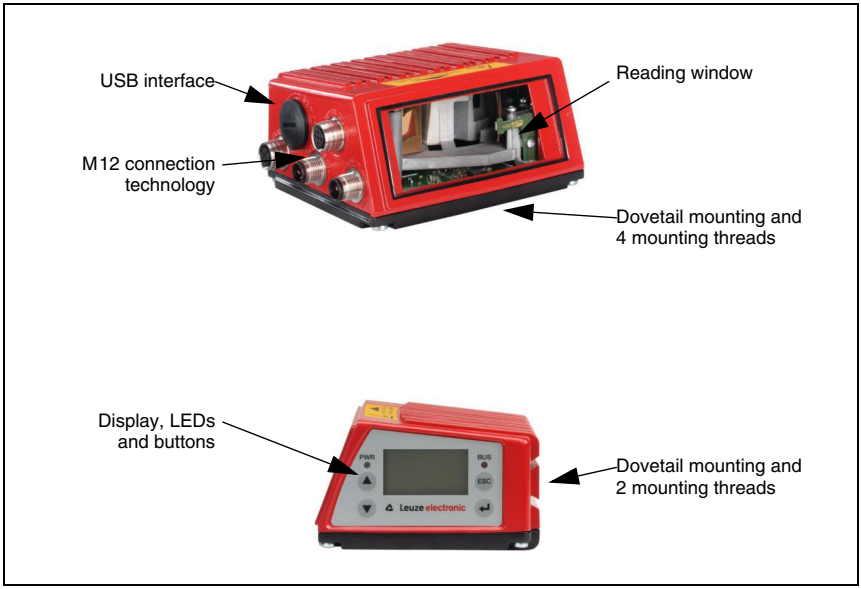

Figure 4.3: Device construction

4.4 Reading techniques

4.4.1 Line scanner (single line)

A line (scan line) scans the label. Due to the opt. opening angle, the reading field width is dependent on the read distance. Through the movement of the object, the entire barcode is automatically transported through the scan line.

The integrated code fragment technology permits twisting of the barcode (tilt angle) within certain limits. These are dependent on the transport speed, the scanning rate of the scanner and the barcode properties.

Areas of application of the line scanner

The line scanner is used:

- when the bars of the barcode are printed in the conveying direction ('ladder arrangement').
- with barcodes having very short bar lengths.
- when the ladder code is turned out of the vertical position (tilt angle).
- when the scanning distance is large.

Figure 4.4: Deflection principle for the line scanner

4.4.2 Line scanner with oscillating mirror

The oscillating mirror deflects the scan line additionally to both sides across the scan direction at a randomly adjustable oscillation frequency. In this way, the BCL 508*i* can also scan larger areas or spaces for barcodes. The reading field height (and the scan line length useful for evaluation) depends on the reading distance due to the optical beam width of the oscillating mirror.

Areas of application of the line scanner with oscillating mirror

For line scanners with oscillating mirror, oscillation frequency, start/stop position etc. are adjustable. It is used:

- when the position of the label is not fixed, e.g. on pallets – various labels can, thus, be detected at various positions.
- when the bars of the barcode are printed perpendicular to the conveying direction ('picket fence arrangement').
- when reading stationary objects.
- when the barcode is turned out of the horizontal position.
- when the scanning distance is large.
- when a large reading field (reading window) has to be covered.

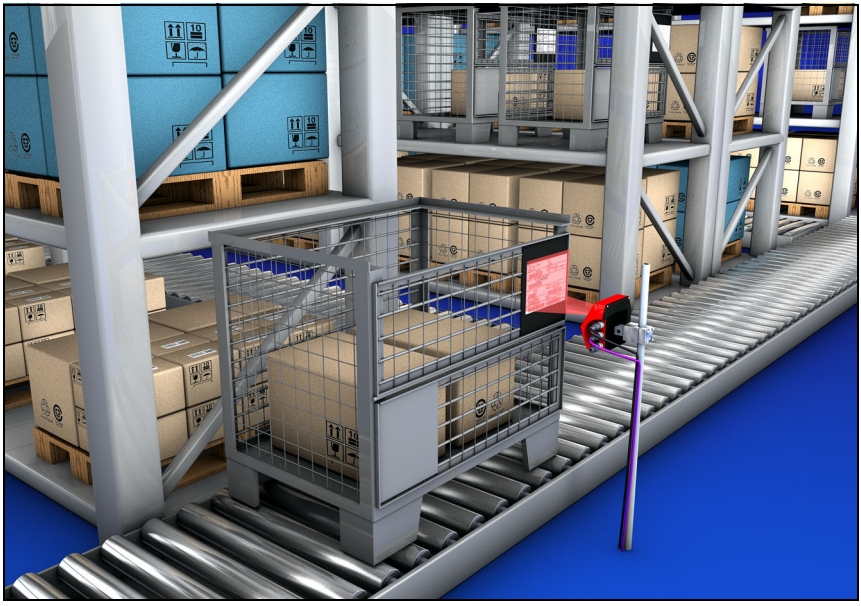

Figure 4.5: Deflection principle for the line scanner with oscillating mirror add-on

4.4.3 Omnidirectional reading

In order to read arbitrarily oriented barcodes on an object, at least 2 barcode readers are necessary. If the barcode is not printed over-square, i.e. bar length > code length, barcode readers with integrated code fragment technology are necessary.

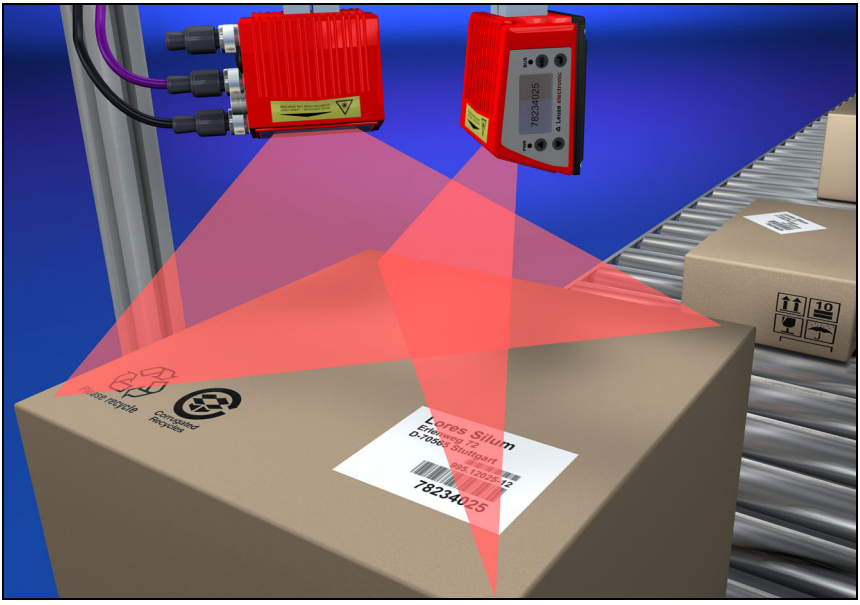

Figure 4.6: Principle arrangement for omnidirectional reading

4.5 Fieldbus systems

Various product variants of the BCL 500*i* series are available for connecting to different fieldbus systems such as PROFIBUS DP, ProfiNet and Ethernet.

4.5.1 Ethernet

The BCL 508*i* is designed as an Ethernet device (acc. to IEEE 802.3) with a standard baud rate of 10/100 Mbit. A fixed MAC ID is assigned to each BCL 508*i* by the manufacturer; this ID cannot be changed.

The BCL 508*i* automatically supports the transmission rates of 10 Mbit/s (10Base T) and 100 Mbit/s (10Base TX), as well as auto-negotiation and auto-crossover.

The BCL 508*i* features multiple M12 connectors / sockets for the electrical connection of the supply voltage, the interface and the switching inputs and outputs. Additional information on the electrical connection can be found in chapter 7.

The BCL 508*i* supports the following protocols and services:

- TCP / IP (Client / Server)
- UDP
- DHCP
- ARP
- PING

For communication with the primary host system, the corresponding TCP/IP protocol (client/server mode) or UDP must be selected.

Further information on commissioning can be found in chapter 10.

4.5.2 Ethernet – star topology

The BCL 508*i* can be operated as a single device (standalone) in an Ethernet star topology with individual IP address.

The IP address can either be set permanently via the display or webConfig tool or assigned dynamically via a DHCP server.

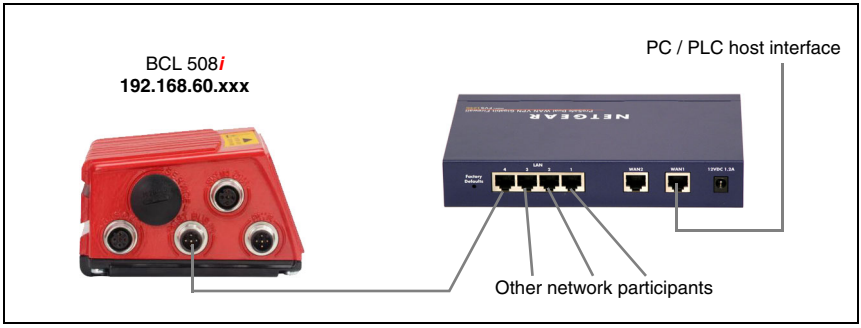

Figure 4.7: Ethernet with star topology

4.5.3 Ethernet – linear topology

The innovative further development of the BCL 508*i* with integrated switch functionality offers the option of connecting multiple barcode readers of type BCL 508*i* to one another without direct connection to a switch. In addition to the classic "star topology", a "linear topology" is thus also possible.

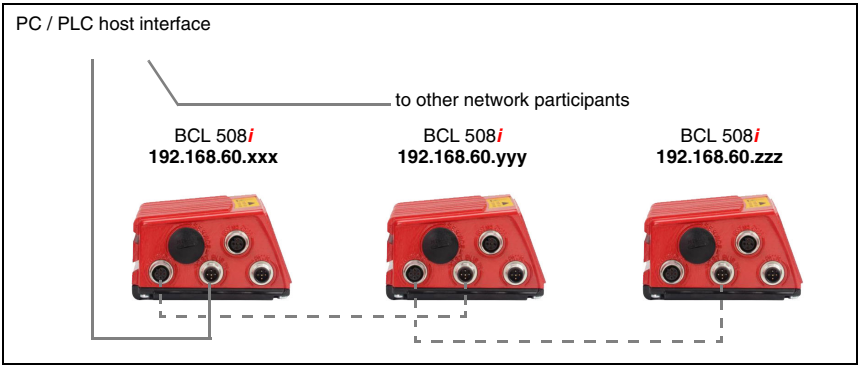

Figure 4.8: Ethernet with linear topology

Each participant in this network requires its own unique IP address which must be assigned via the display or webConfig tool; alternatively, the DHCP method can also be used.

The maximum length of a segment (connection from the hub to the last participant) is limited to 100 m.

4.6 Heater

For low-temperature applications to min. -35°C (e.g. in cold storage), the barcode readers of the BCL 508*i* series can optionally be permanently fitted with a built-in heating and these barcode readers purchased as separate device models.

4.7 External parameter memory

The optionally available external parameter memory – based on a USB memory stick (compatible with version 1.1) – is housed in an external hood with integrated connectors which cover the USB service interface when installed (IP 65). By having available a copy of the current parameter set of the BCL 508*i*, the external parameter memory makes it easy and reduces the time needed to replace the BCL 508*i* on site. A manual configuration of the exchanged device is thereby omitted.

The procedure for transferring the configuration with the aid of the external parameter memory is described on page 120.

The delivery contents of the external parameter memory include the hood with integrated connectors with unscrewable cover and the USB memory stick.

Figure 4.9: External parameter memory

Notice!

To mount, the cover of the hood with integrated connectors must be unscrewed. The tube is then screwed onto the USB connection on the BCL 508i after which the USB memory stick is plugged into the connection and the hood with integrated connectors closed with the cover in order to ensure protection class IP 65.

4.8 autoReflAct

AutoReflAct stands for **Auto**matic **Refl**ector **Act**ivation and permits an activation without additional sensors. This is achieved by directing the scanner with reduced scanning beam towards a reflector mounted behind the conveyor path. As long as the scanner is targeted at the reflector, the reading gate remains closed. If, however, the reflector is blocked by an object such as a container with a barcode label, the scanner activates the read procedure, and the label on the container is read. When the path from the scanner to the reflector has cleared, the read procedure has completed and the scanning beam is reduced and again directed onto the reflector. The reading gate is closed.

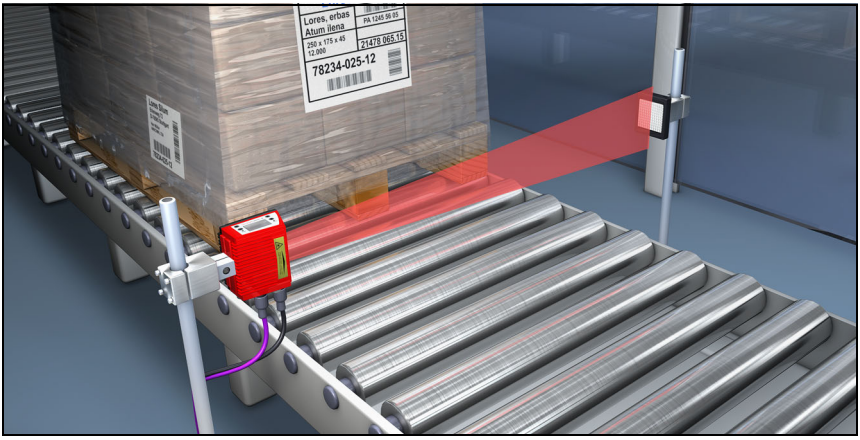

Figure 4.10: Reflector arrangement for autoReflAct

The **autoReflAct** function uses the scanning beam to simulate a photoelectric sensor and thus permits an activation without additional sensory mechanism.

4.9 Reference codes

The BCL 508*i* offers the possibility of storing one or two reference codes.

It is possible to store the reference codes by means of teach-in (display command), via the webConfig tool or via online commands.

The BCL 508*i* can compare read barcodes with one and/or both reference codes and execute user-configurable functions depending on the comparison result.

4.10 autoConfig

With the autoConfig function, the BCL 508*i* offers the user who only wishes to simultaneously read one code type (symbology) with one number of digits an extremely simple and convenient configuration option.

After starting the autoConfig function via the display, switching input or from a primary control, it is sufficient to position a barcode label with the desired code type and number of digits in the reading field of the BCL 508*i*.

Afterward, barcodes with the same code type and number of digits are recognised and decoded.

5 Specifications

5.1 General specifications of the barcode readers

5.1.1 Line scanner

Type	BCL 508*i* Ethernet
Type	**Line scanner without heating**
Optical data	
Light source	laser diode λ = 650nm / 655nm (red light)
Beam exit	front
Scanning rate	1000 scans/s (adjustable in the range 800 … 1200 scans/s)
Beam deflection	by means of rotating polygon wheel
Useful opening angle	max. 60°
Optics models / resolution	High Density (**N**): 0.25 … 0.5mm Medium Density (**M**): 0.35 … 0.8mm Low Density (**F**): 0.5 … 1.0mm Ultra Low Density (**L**): 0,7 … 1,0mm
Read distance	see reading field curves
Laser safety class	2 acc. to EN 60825-1, CDRH (U.S. 21 CFR 1040.10)
Barcode data	
Code types	2/5 Interleaved, Code 39, Code 128, EAN 128, EAN / UPC, Codabar, Code 93, RSS 14
Barcode contrast (PCS)	>= 60%
External light tolerance	2000 lx (on the barcode)
Number of barcodes per scan	6
Electrical data	
Interface type	2x Ethernet on 2x M12 (D)
Protocols	Ethernet TCP/IP (Client/ Server) / UDP
Baud rate	10/100MBaud
Data formats	
Service interface	USB 1.1 compatible, A-coded
Switching input / switching output	4 switching inputs/outputs, freely programmable functions - Switching input: 10 … 30VDC depending on supply voltage, I max. = 8mA - Switching output: 10 … 30VDC, depending on supply voltage, I max. = 100mA (short-circuit proof) Switching inputs/outputs are protected against polarity reversal!
Operating voltage	10 … 30VDC (Class II, Safety Class III)
Power consumption	max. 10W
Operating and display elements	
Display	monochromatic graphical display, 128 x 64 pixel, with background lighting
Keyboard	4 buttons
LEDs	2 LEDs for power (PWR) and bus state (BUS), two-coloured (red/green)

Table 5.1: Specifications of the BCL 508*i* line scanners without heating

Type	BCL 508*i* Ethernet
Type	**Line scanner without heating**
Mechanical data	
Protection class	IP 65 (with screwed-on M12 connectors or mounted caps)
Weight	1.1kg
Dimensions (WxHxD)	63 x123.5 x106.5mm
Housing	diecast aluminium
Environmental data	
Operating temperature range	0°C … +40°C
Storage temperature range	-20°C … +70°C
Air humidity	max. 90% rel. humidity, non-condensing
Vibration	IEC 60068-2-6, test FC
Shock	IEC 60068-2-27, test Ea
Continuous shock	IEC 60068-2-29, test Eb
Electromagnetic compatibility	EN 55022; IEC 61000-6-2 (contains IEC 61000-4-2, -3, -4, -5 and -6) 1)

Table 5.1: Specifications of the BCL 508*i* line scanners without heating

1) This is a Class A product. In a domestic environment this product may cause radio interference, in which case the operator may be required to take adequate measures.

Attention!

For UL applications, use is permitted exclusively in Class 2 circuits according to NEC (National Electric Code).

The BCL 508i barcode readers are designed in accordance with safety class III for supply by PELV (protective extra-low voltage with reliable disconnection).

5.1.2 Oscillating-mirror scanner

Technical data same as for line scanner without heating with the following differences:

Type	BCL 508*i* Ethernet
Type	**Oscillating-mirror scanner without heating**
Optical data	
Beam exit	Lateral zero position at an angle of 90°
Beam deflection	Via rotating polygon wheel (horizontal) and stepping motor with mirror (vertical)
Oscillation frequency	0 … 10Hz (adjustable, max. frequency is dependent on set swivel angle)
Max. swivel angle	±20°(adjustable)
Reading field height	see reading field curves
Electrical data	
Power consumption	max. 14W

Table 5.2: Specifications of the BCL 508*i* oscillating-mirror scanners without heating

Type	BCL 508*i* Ethernet
Type	**Oscillating-mirror scanner without heating**
Mechanical data	
Weight	1.5 kg
Dimensions (W x H x D)	84 x 173 x 147 mm

Table 5.2: Specifications of the BCL 508*i* oscillating-mirror scanners without heating

5.1.3 Line scanner with deflection mirror

Technical data same as for line scanner without heating with the following differences:

Type	BCL 508*i* Ethernet
Type	**Line scanner with deflection mirror without heating**
Optical data	
Beam exit	Lateral zero position at an angle of 90°
Beam deflection	Via rotating polygon wheel (horizontal) and deflection mirror (vertical)
Max. optical adjustment range of the beam exit	±10° (adjustable via display or software)
Electrical data	
Power consumption	max. 11 W
Mechanical data	
Weight	1.4 kg
Dimensions (W x H x D)	84 x 173 x 147 mm

Table 5.3: Specifications of the BCL 508*i* deflection-mirror scanners without heating

5.2 Heating models of the barcode readers

The BCL 508*i* barcode readers are optionally available as models with integrated heating. In this case, heating is permanently installed ex works. Self-installation on-site by the user is not possible!

Features

- Integrated heating (permanently installed)
- Extends the application range of the BCL 508*i* to -35 °C
- Supply voltage 24 V DC ±20 %
- BCL 508*i* enabling through an internal temperature switch
  (switch-on delay about 30 min for 24 V DC and minimum ambient temperature of -35 °C)
- Necessary conductor cross-section for the voltage supply: at least 0.75 mm²; the use of ready-made cables is, thus, not possible.

Construction

The heating consists of two parts:

- The front cover heater
- The housing heater

Function

When the 24VDC supply voltage is applied to the BCL 508*i*, a temperature switch initially only connects the heating to electrical power (front cover heater and housing heater). During the heating phase (around 30min), when the inside temperature rises above 15°C, the temperature switch connects the BCL 508*i* to the supply voltage. This is followed by the self test and the changeover to read operation. The "PWR" LED lights up showing overall readiness for operation.

When the inside temperature reaches approximately 18 °C, another temperature switch turns the housing heater off and, if necessary, back on again (if the inside temperature drops below 15°C). This does not interrupt the read operation. The front cover heater remains activated until an inside temperature of 25°C is reached. At temperatures above this, the front cover heater switches off and, with a switching hysteresis of 3°C, back on again at an inside temperature below 22°C.

Electrical connection

The required core cross-section of the connection cable for the voltage supply must be at least 0.75 mm².

Attention!

The voltage supply must not be looped through from one device to the next.

Power consumption

The energy requirement depends on the model:

- the line scanner with heating typically consumes 40W and a maximum of 50W power.
- the line scanner with oscillating mirror and heating typically consumes 60W and a maximum of 75W.

These values are based on operation with unconnected switching outputs.

5.2.1 Line scanner with heating

Technical data same as for line scanner without heating with the following differences:

Type	**BCL 508*i*** Ethernet
Type	**Line scanner with heating**
Electrical data	
Operating voltage	24VDC ±20%
Power consumption	max. 50W
Structure of the heating	Housing heating and separate heating of the optics glass
Warmup time	Min. 30min at +24VDC and an ambient temperature of -35°C

Table 5.4: Specifications of the BCL 508*i* line scanners with heating

Type	BCL 508*i* Ethernet
Type	**Line scanner with heating**
Min. conductor cross-section	Conductor cross-section of at least 0.75 mm² for the supply-voltage supply line. Wiring through of the voltage supply to multiple heating devices is **not** permissible. Standard, M12 ready-made cable **not** usable (insufficient cable cross-section)
Environmental data	
Operating temperature range	-35°C … +40°C
Storage temperature range	-20°C … +70°C

Table 5.4: Specifications of the BCL 508*i* line scanners with heating

5.2.2 Oscillating-mirror scanner with heating

Technical data same as for line scanner without heating with the following differences:

Type	BCL 508*i* Ethernet
Type	**Oscillating-mirror scanner with heating**
Optical data	
Useful opening angle	max. 50°
Max. swivel angle	±12°(adjustable)
Electrical data	
Operating voltage	24 VDC ±20%
Power consumption	max. 75 W
Structure of the heating	Housing heating and separate heating of the optics glass
Warmup time	Min. 30 min at +24 VDC and an ambient temperature of -35°C
Min. conductor cross-section	Conductor cross-section of at least 0.75 mm² for the supply-voltage supply line. Wiring through of the voltage supply to multiple heating devices is **not** permissible. Standard, M12 ready-made cable **not** usable (insufficient cable cross-section)
Environmental data	
Operating temperature range	-35°C … +40°C
Storage temperature range	-20°C … +70°C

Table 5.5: Specifications of the BCL 508*i* oscillating-mirror scanners with heating

5.2.3 Line scanner with deflection mirror and heating

Technical data same as for line scanner without heating with the following differences:

Type	BCL 508*i* Ethernet
Type	**Deflection mirror scanner with heating**
Optical data	
Useful opening angle	max. 50°
Max. adjustment range	±10°(adjustable via display or software)
Electrical data	
Operating voltage	24VDC ±20%
Power consumption	max. 75W
Structure of the heating	Housing heating and separate heating of the optics glass
Warmup time	Min. 30min at +24VDC and an ambient temperature of -35°C
Min. conductor cross-section	Conductor cross-section of at least 0.75mm² for the supply-voltage supply line. Wiring through of the voltage supply to multiple heating devices is **not** permissible. Standard, M12 ready-made cable **not** usable (insufficient cable cross-section)
Environmental data	
Operating temperature range	-35°C … +40°C
Storage temperature range	-20°C … +70°C

Table 5.6: Specifications of the BCL 508*i* deflection-mirror scanners with heating

5.3 Dimensioned drawings

5.3.1 Line scanner with / without heating

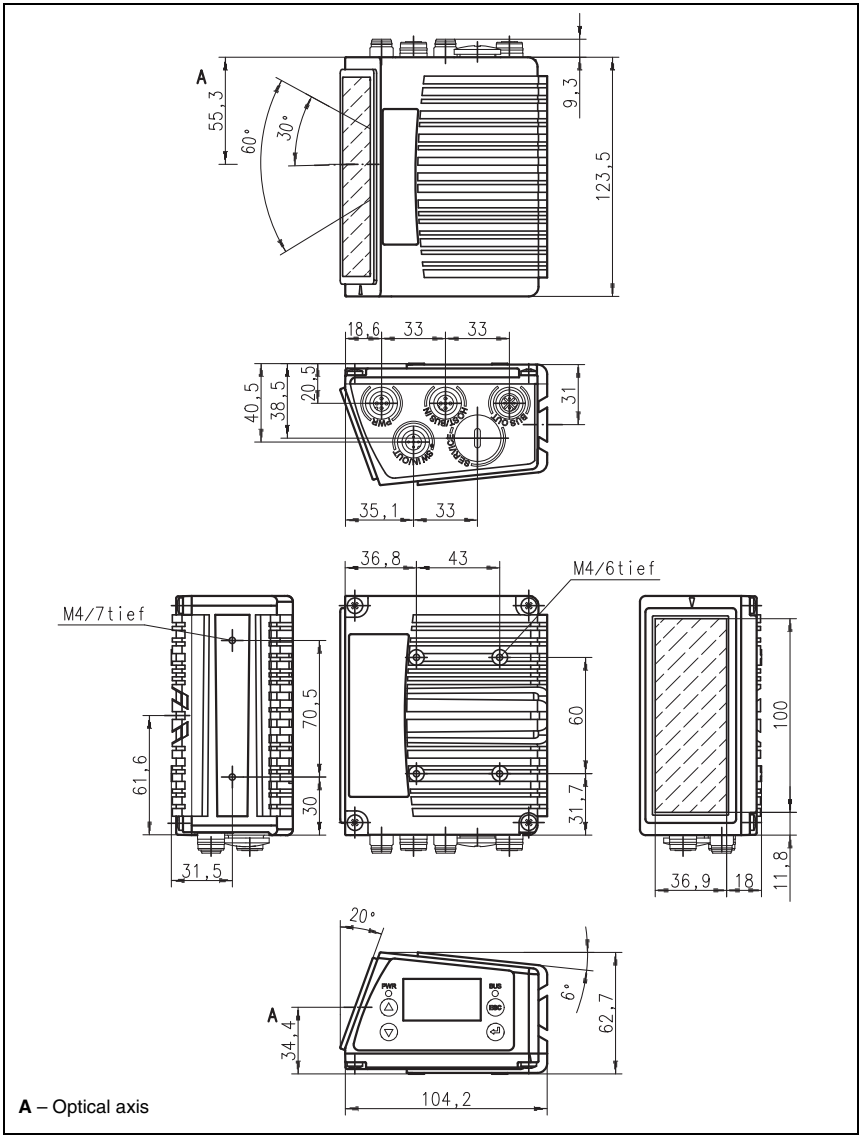

Figure 5.1: Dimensioned drawing BCL 508*i* line scanner S…102

5.3.2 Deflection mirror scanner with / without heating

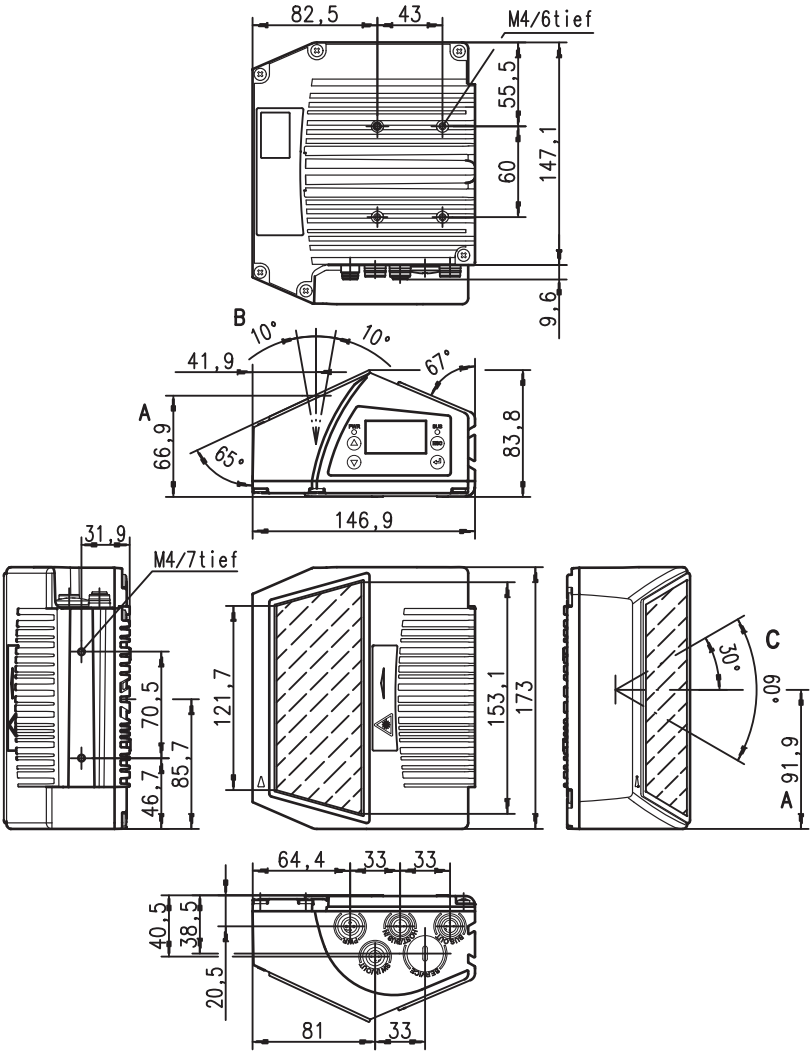

A – Optical axis
B – Optical adjustment range
C – Opening angle
The opening angle is reduced on devices with heating, see "Reading field curves for heating devices" on page 53.

Figure 5.2: Dimensioned drawing BCL 508*i* deflection-mirror scanner S…100

5.3.3 Oscillating-mirror scanner with / without heating

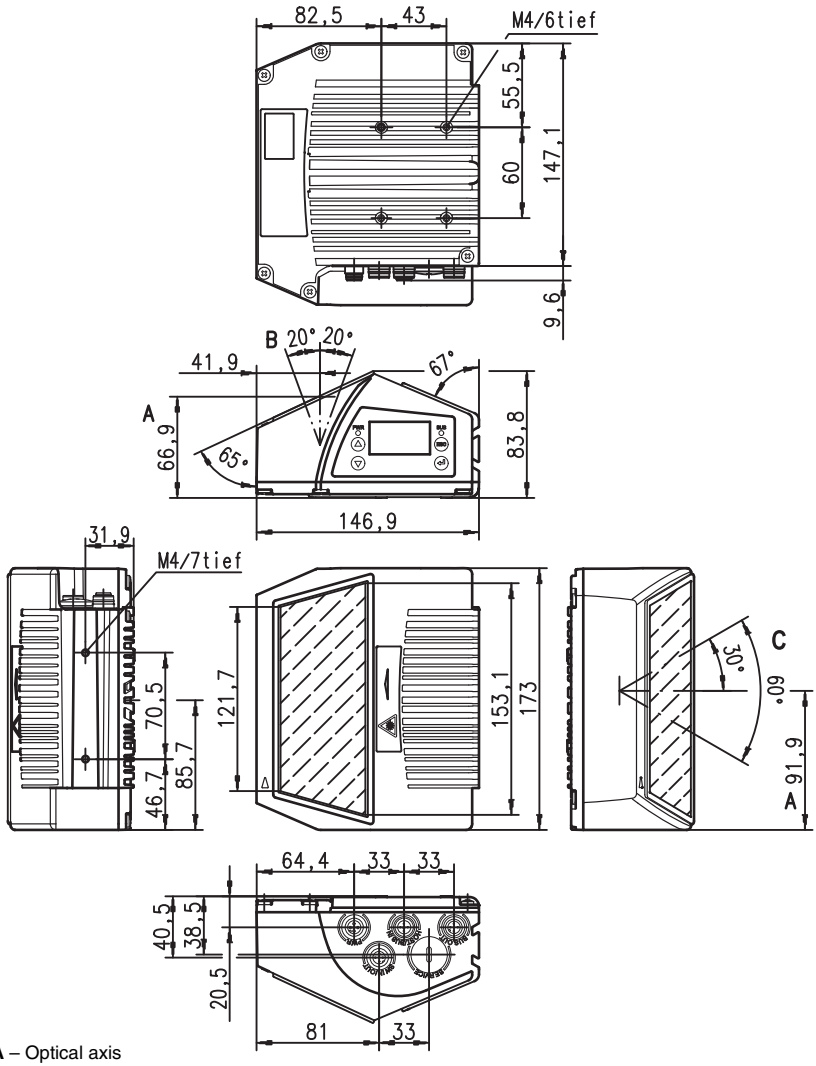

A – Optical axis
B – Optical swivel range
C – Opening angle
The optical swivel range and the opening angle are reduced on devices with heating, see "Reading field curves for heating devices" on page 53.

Figure 5.3: Dimensioned drawing BCL 508*i* oscillating-mirror scanner O…100

5.4 Type overview BCL 508*i*

BCL 508i family

(PROFINET / 2x Ethernet on 2x M12 D-coded)

Type designation	Description	Part No.
High Density Optics (m = 0.25 … 0.5mm)		
BCL 508*i* SN 100	Line scanner with deflection mirror	501 05507
BCL 508*i* SN 102	Line scanner, beam exit at the front	501 05508
BCL 508*i* ON 100	Oscillating-mirror scanner	501 05509
BCL 508*i* SN 100 H	Line scanner with deflection mirror, with heating	501 05510
BCL 508*i* SN 102 H	Line scanner, beam exit at the front, with heating	501 05511
BCL 508*i* ON 100 H	Oscillating-mirror scanner with heating	501 05512
Medium Density Optics (m = 0.35 … 1.0mm)		
BCL 508*i* SM 100	Line scanner with deflection mirror	501 05513
BCL 508*i* SM 102	Line scanner, beam exit at the front	501 05514
BCL 508*i* OM 100	Oscillating-mirror scanner	501 05515
BCL 508*i* SM 100 H	Line scanner with deflection mirror, with heating	501 05516
BCL 508*i* SM 102 H	Line scanner, beam exit at the front, with heating	501 05517
BCL 508*i* OM 100 H	Oscillating-mirror scanner with heating	501 05518
Low Density Optics (m = 0.5 … 1.0mm)		
BCL 508*i* SF 100	Line scanner with deflection mirror	501 05519
BCL 508*i* SF 102	Line scanner, beam exit at the front	501 05520
BCL 508*i* OF 100	Oscillating-mirror scanner	501 05521
BCL 508*i* SF 100 H	Line scanner with deflection mirror, with heating	501 05522
BCL 508*i* SF 102 H	Line scanner, beam exit at the front, with heating	501 05523
BCL 508*i* OF 100 H	Oscillating-mirror scanner with heating	501 05524
Ultra Low Density Optics (m = 0.7 … 1.0mm)		
BCL 508*i* SL 102	Line scanner, beam exit at the front	501 09905
BCL 508*i* OL 100	Oscillating-mirror scanner	501 09906
BCL 508*i* SL 102 H	Line scanner, beam exit at the front, with heating	501 09908
BCL 508*i* OL 100 H	Oscillating-mirror scanner with heating	501 09909

Table 5.7: Type overview BCL 508*i*

5.5 Reading field curves / optical data

Barcode characteristics

Notice!

Please note that the size of the barcode module influences the maximum reading distance and the width of the reading field. Therefore, when selecting a mounting location and/or the barcode label, take into account the different reading characteristics of the scanner with various barcode modules.

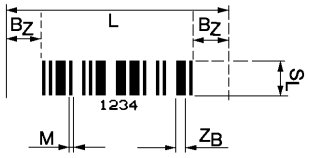

M = Module: The narrowest line or space of a barcode in mm

Z_B = Wide element: Wide lines and spaces are a multiple (ratio) of the module.
Module x Ratio = Z_B (Normal Ratio 1 : 2.5)

B_Z = Quiet zone: The quiet zone should be at least 10 times the module, but not less than 2.5 mm.

L = Code length: The length of the barcode in mm including the start and stop characters. The quiet zone is included depending on the code definition.

S_L = Bar length: Height of the elements in mm

Figure 5.4: The most important characteristics of a barcode

The range in which the barcode can be read by the BCL 508*i* (the so-called reading field) depends on the quality of the printed barcode and its dimensions.

Therefore, above all, the module of a barcode is decisive for the size of the reading field.

Notice!

A rule of thumb: The smaller the module of the barcode is, the smaller the maximum reading distance and reading field width will be.

5.6 Reading field curves

Notice!

Please notice that the real reading fields are also influenced by factors such as labelling material, printing quality, scanning angle, printing contrast etc., and may thus deviate from the reading fields specified here.

The zero position of the reading distance always refers the front edge of the housing of the beam exit and is shown in figure 5.5 for the two housing types of the BCL 508*i*.

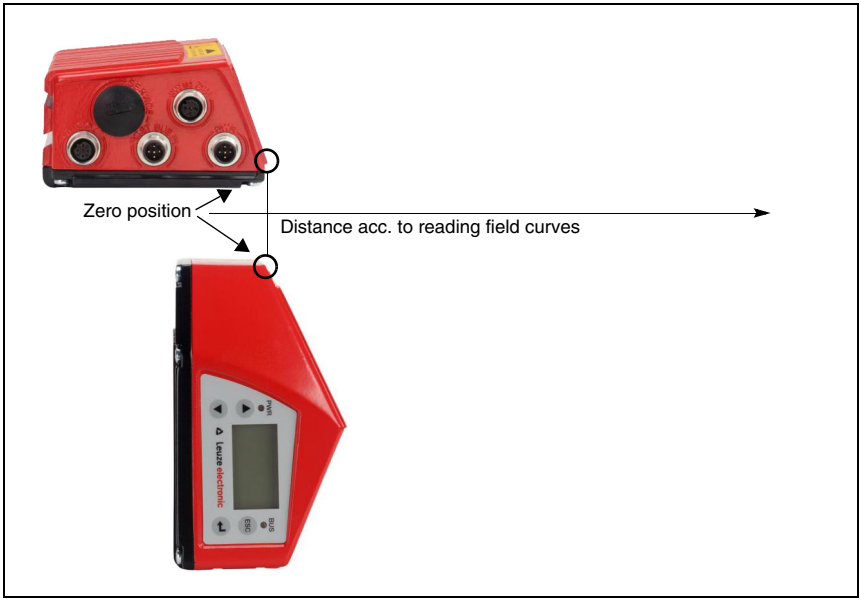

Figure 5.5: Zero position of the reading distance

Reading conditions for the reading field curves

Barcode type	2/5 Interleaved
Ratio	1:2.5
ANSI specification	class A
Reading rate	> 75%

Table 5.8: Reading conditions

5.6.1 High Density (N) Optics: BCL 508*i* SN 100/102

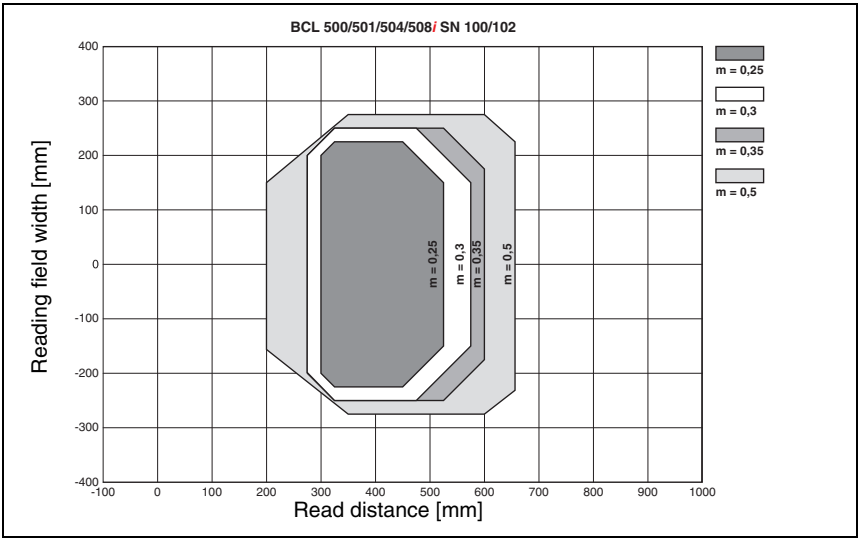

Figure 5.6: "High Density" reading field curve for line scanner (with/without deflection mirror)

The reading field curve applies for the reading conditions stated in table 5.8.

5.6.2 High Density (N) Optics: BCL 508*i* ON 100

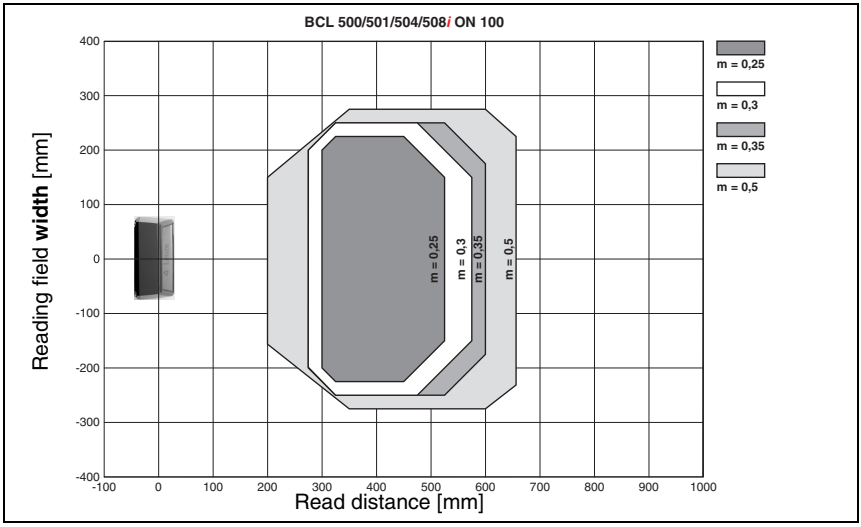

Figure 5.7: "High Density" reading field curve for oscillating-mirror scanners

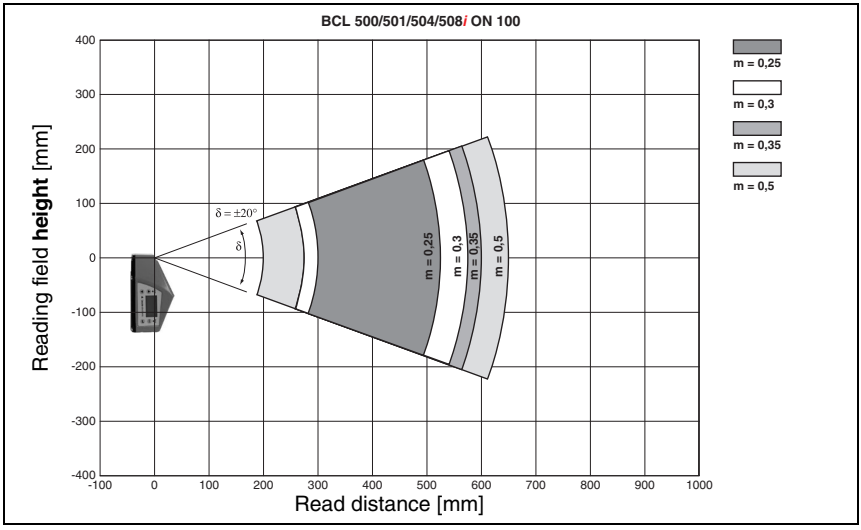

Figure 5.8: Lateral "High Density" reading field curve for oscillating-mirror scanners

The reading field curves apply for the reading conditions stated in table 5.8.

5.6.3 Medium Density (M) Optics: BCL 508*i* SM 100/102

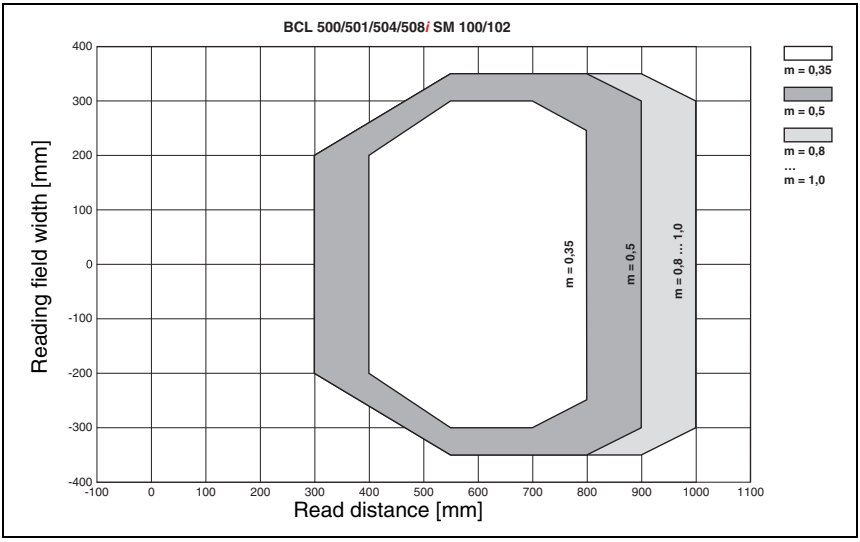

Figure 5.9: "Medium Density" reading field curve for line scanner (with/without deflection mirror)

The reading field curves apply for the reading conditions stated in table 5.8.

5.6.4 Medium Density (M) Optics: BCL 508*i* OM 100

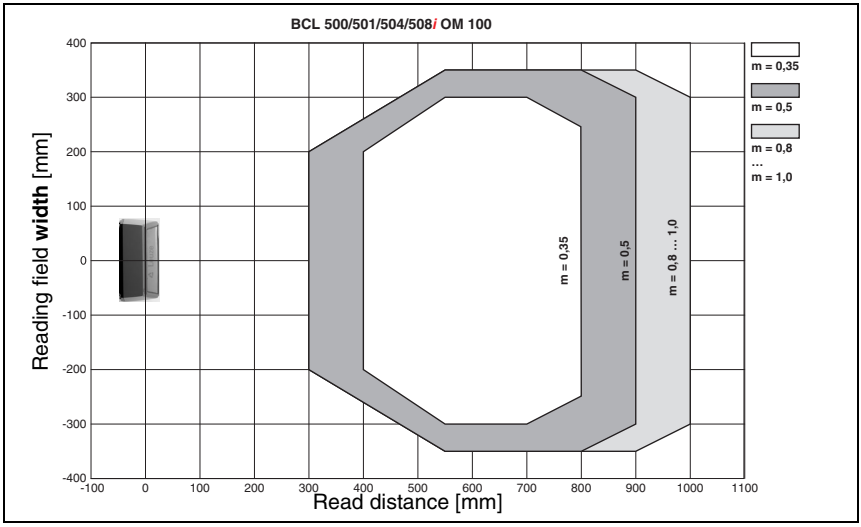

Figure 5.10: "Medium Density" reading field curve for oscillating-mirror scanners

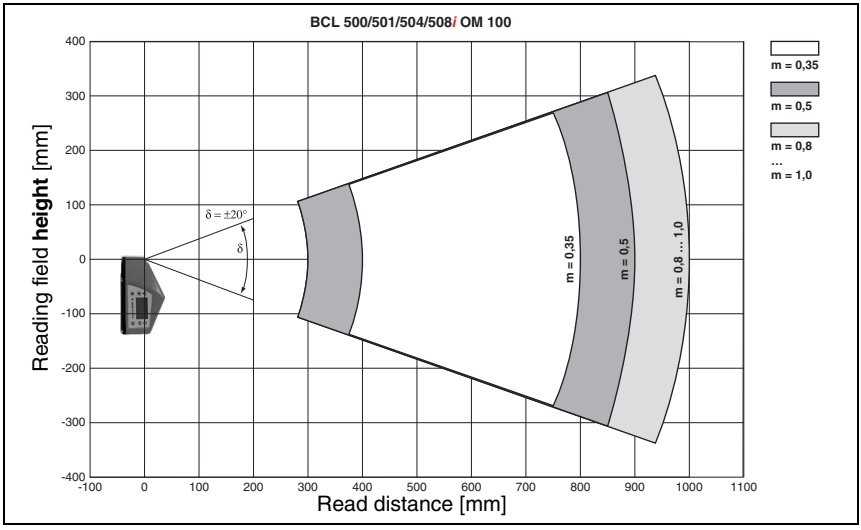

Figure 5.11: Lateral "Medium Density" reading field curve for oscillating-mirror scanners

The reading field curves apply for the reading conditions stated in table 5.8.

5.6.5 Low Density (F) Optics: BCL 508*i* SF 100/102

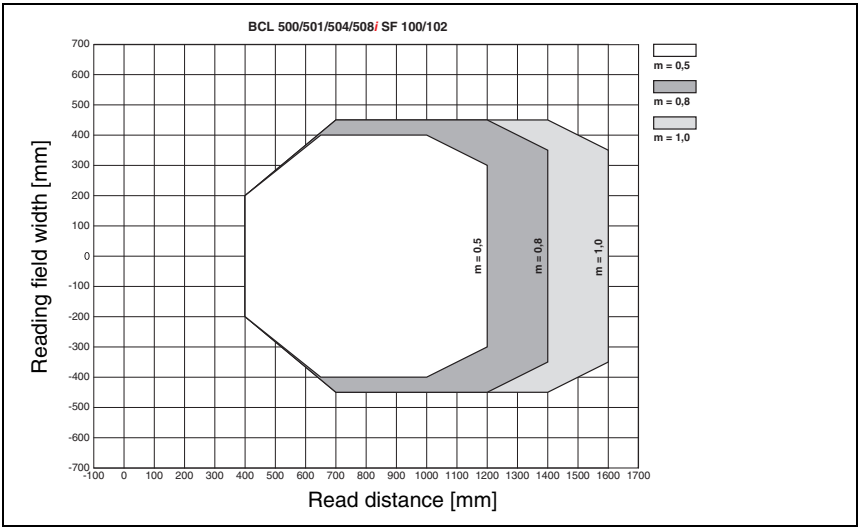

Figure 5.12: "Low Density" reading field curve for line scanner (with/without deflection mirror)

The reading field curves apply for the reading conditions stated in table 5.8.

5.6.6 Low Density (F) Optics: BCL 508*i* OF 100

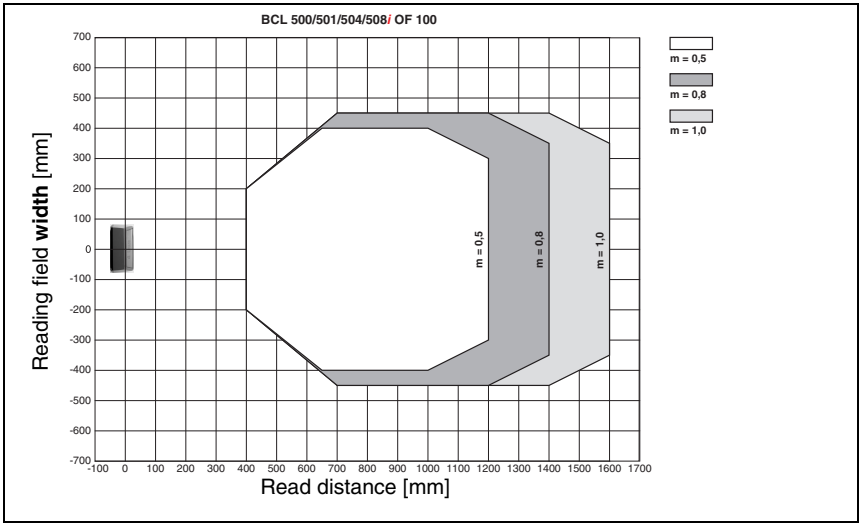

Figure 5.13: "Low Density" reading field curve for oscillating-mirror scanners

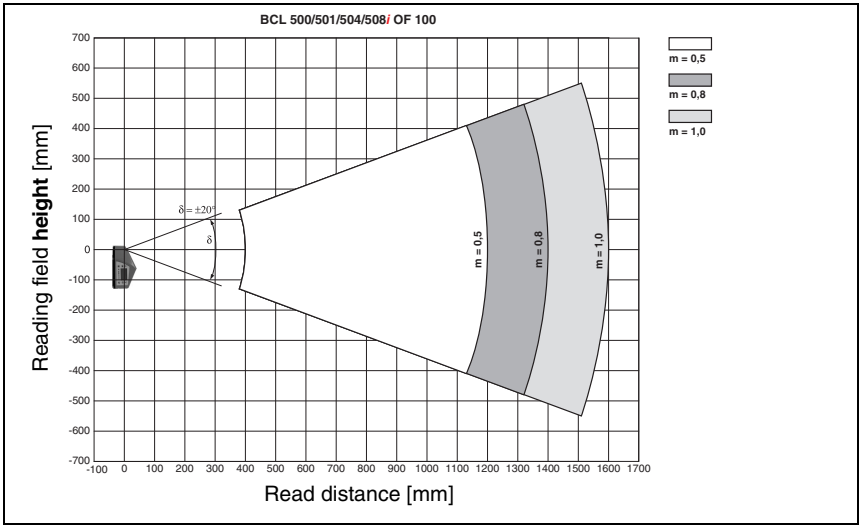

Figure 5.14: Lateral "Low Density" reading field curve for oscillating-mirror scanners

The reading field curves apply for the reading conditions stated in table 5.8.

5.6.7 Ultra Low Density (L) Optics: BCL 508*i* SL 102

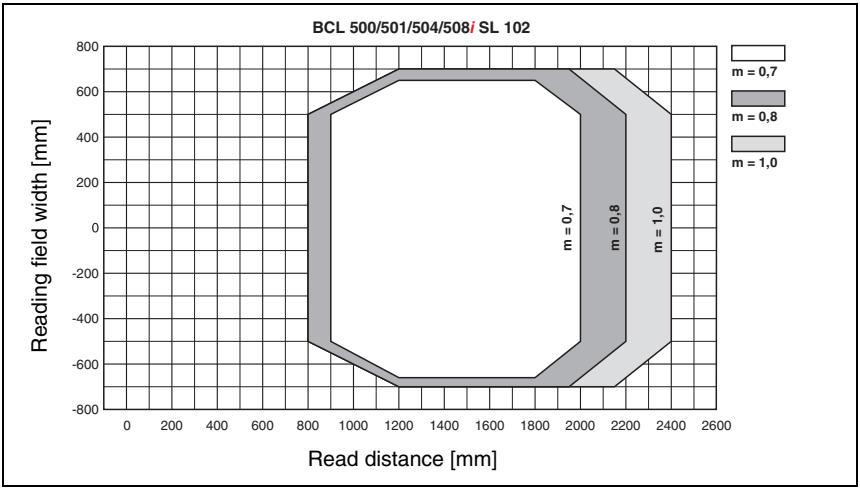

Figure 5.15: "Ultra Low Density" reading field curve for line scanner without deflection mirror

The reading field curves apply for the reading conditions stated in table 5.8.

5.6.8 Ultra Low Density (L) Optics: BCL 508*i* OL 100

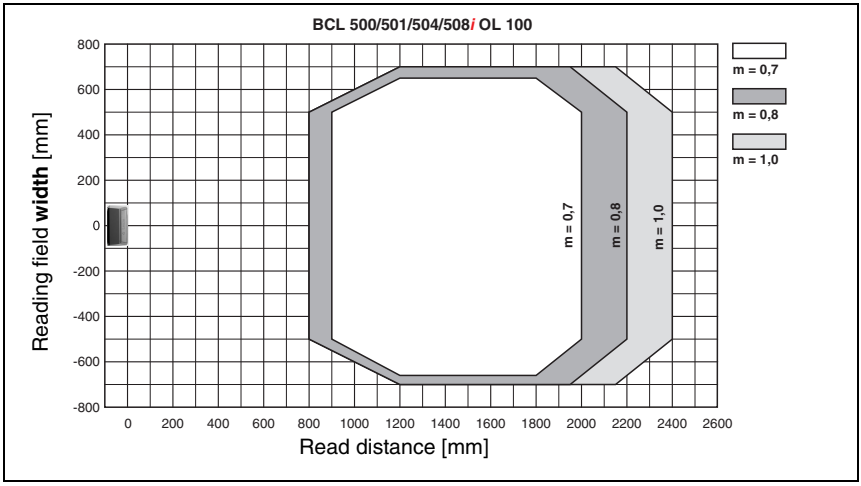

Figure 5.16: "Ultra Low Density" reading field curve for oscillating-mirror scanners

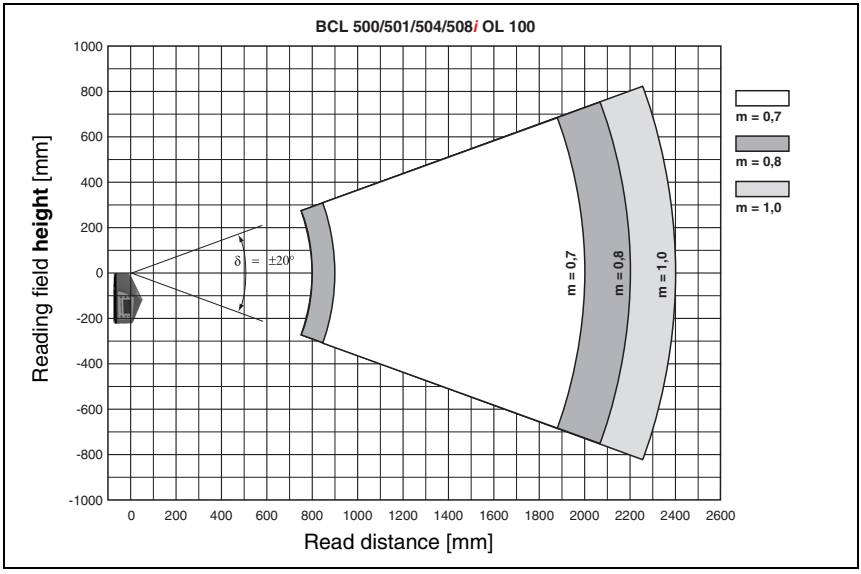

Figure 5.17: Lateral "Ultra Low Density" reading field curve for oscillating-mirror scanners

The reading field curves apply for the reading conditions stated in table 5.8.

5.7 Reading field curves for heating devices

The reading field curves of the heating devices differ to some extent from the normal reading curves due to the optics heating and are somewhat reduced in the reading field width as well as in the reading field height!

- **The maximum opening angle** for all oscillating and deflection mirror devices (BCL 508*i*…**100 H**) **is reduced to ±28°** (without heating = ±30°).
- **In addition, the maximum swivel range** for all oscillating mirror devices (BCL 508*i* **O**…**100 H**) **is reduced to ±12°** (without heating = ±20°). The deflection mirror models (BCL 508*i* **S**…**100 H**) are not affected by this limitation.
- The reading field curves and opening angles are unchanged for all line scanners with heating (BCL 508*i* **S**…**102 H**), .

For details, please refer to the following reading field curves for the heating devices.

5.7.1 High Density (N) Optics: BCL 508*i* SN 102 H

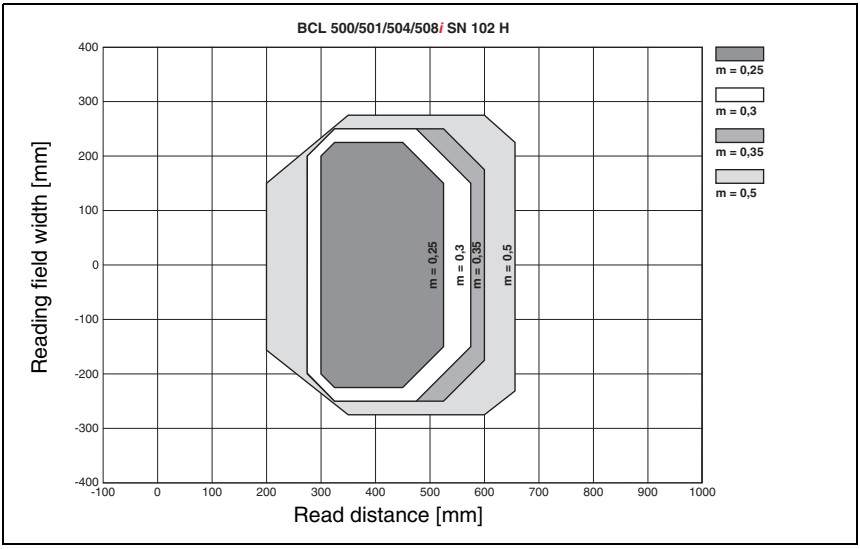

Figure 5.18: "High Density" reading field curve for line scanner with heating (without deflection mirror)

The reading field curve applies for the reading conditions stated in table 5.8.

5.7.2 High Density (N) Optics: BCL 508*i* SN 100 H

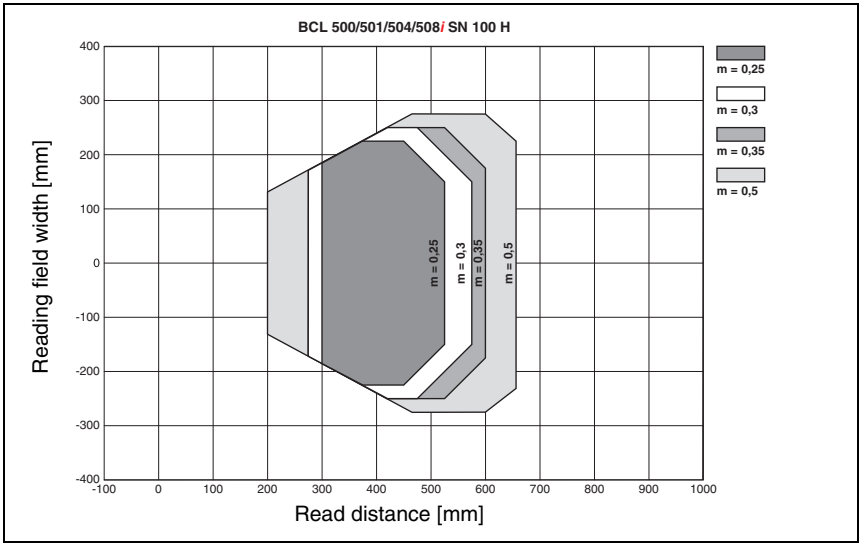

Figure 5.19: "High Density" reading field curve for line scanner with heating (with deflection mirror)

The reading field curve applies for the reading conditions stated in table 5.8.

5.7.3 High Density (N) Optics: BCL 508*i* ON 100 H

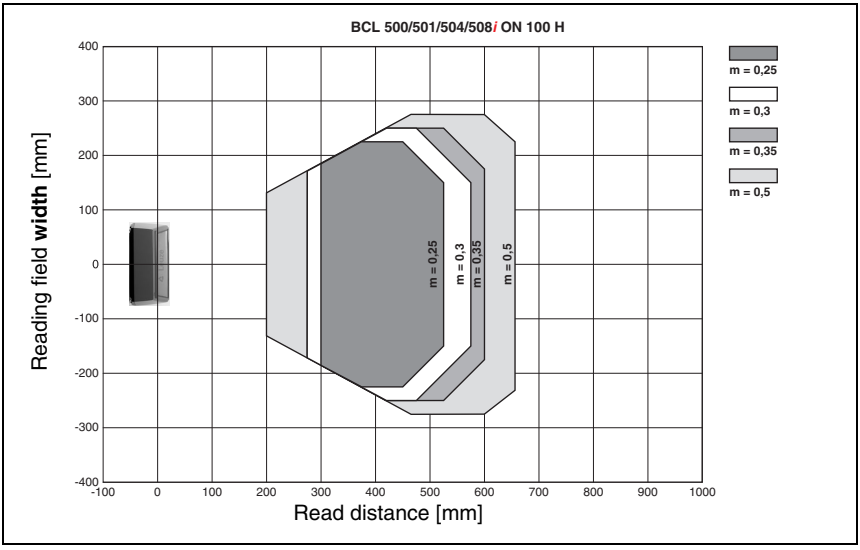

Figure 5.20: "High Density" reading field curve for oscillating-mirror scanners with heating

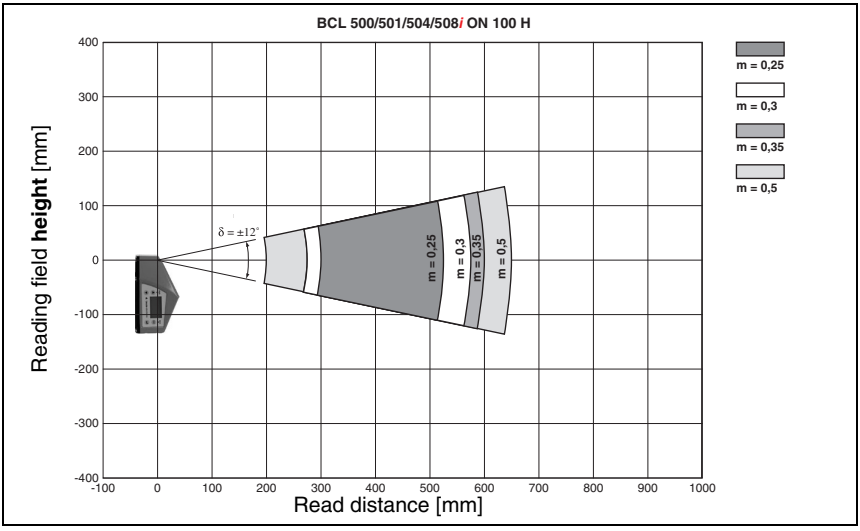

Figure 5.21: Lateral "High Density" reading field curve for oscillating-mirror scanners with heating

The reading field curves apply for the reading conditions stated in table 5.8.

5.7.4 Medium Density (M) Optics: BCL 508*i* SM 102 H

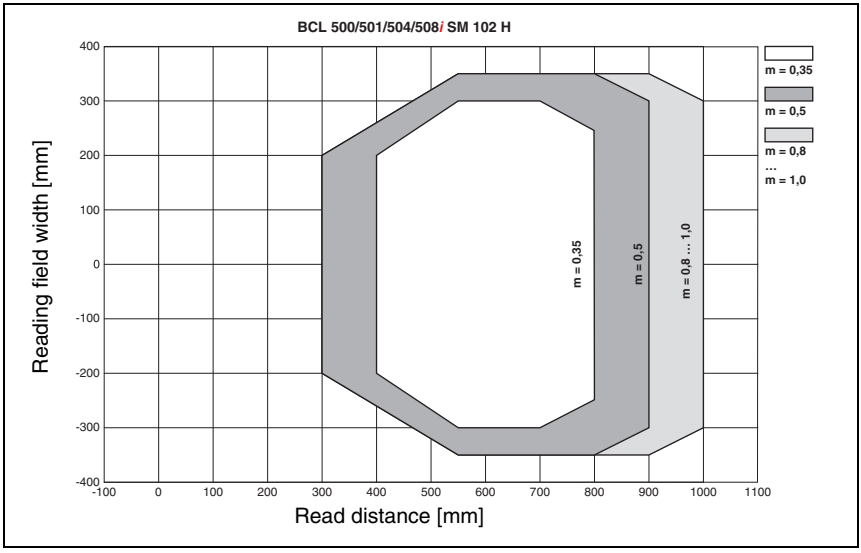

Figure 5.22: "Medium Density" reading field curve for line scanner with heating (without deflection mirror)

The reading field curves apply for the reading conditions stated in table 5.8.

5.7.5 Medium Density (M) Optics: BCL 508*i* SM 100 H

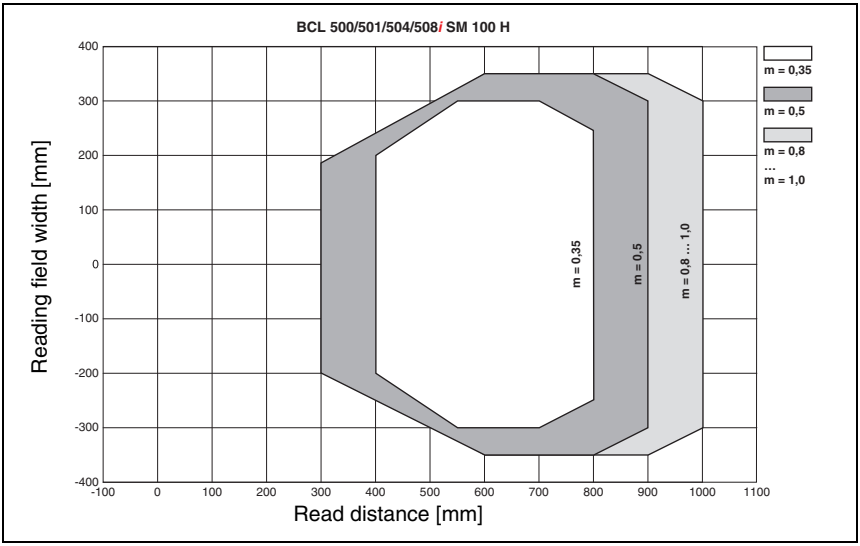

Figure 5.23: "Medium Density" reading field curve for line scanner with heating (with deflection mirror)

The reading field curves apply for the reading conditions stated in table 5.8.

5.7.6 Medium Density (M) Optics: BCL 508*i* OM 100 H

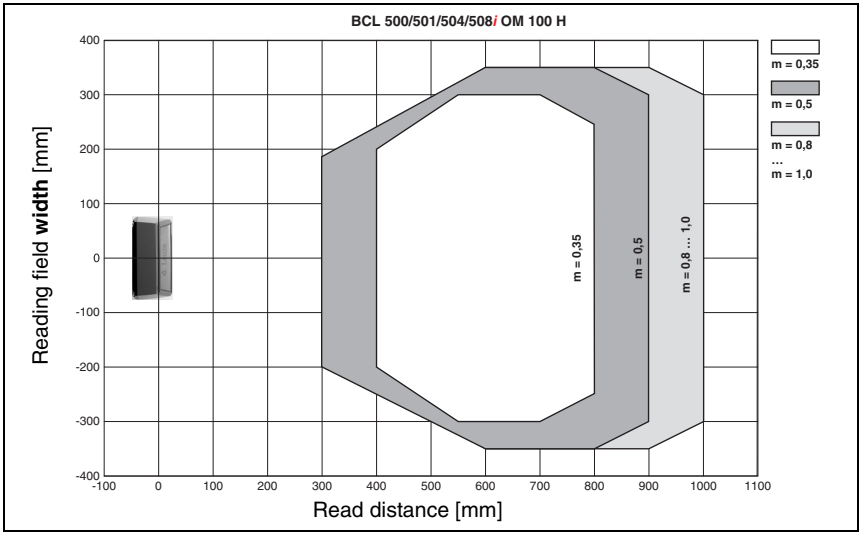

Figure 5.24: "Medium Density" reading field curve for oscillating-mirror scanners with heating

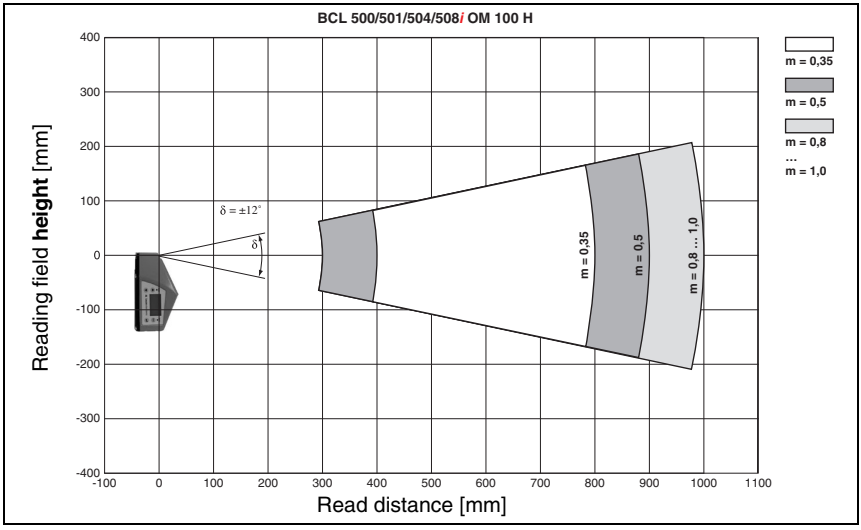

Figure 5.25: Lateral "Medium Density" reading field curve for oscillating-mirror scanners with heating

The reading field curves apply for the reading conditions stated in table 5.8.

5.7.7 Low Density (F) Optics: BCL 508*i* SF 102 H

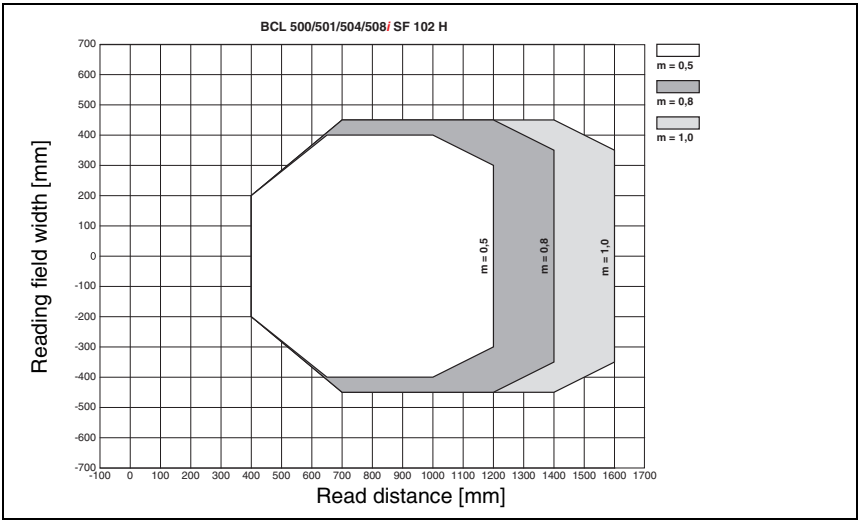

Figure 5.26: "Low Density" reading field curve for line scanner with heating (without deflection mirror)

The reading field curves apply for the reading conditions stated in table 5.8.

5.7.8 Low Density (F) Optics: BCL 508*i* SF 100 H

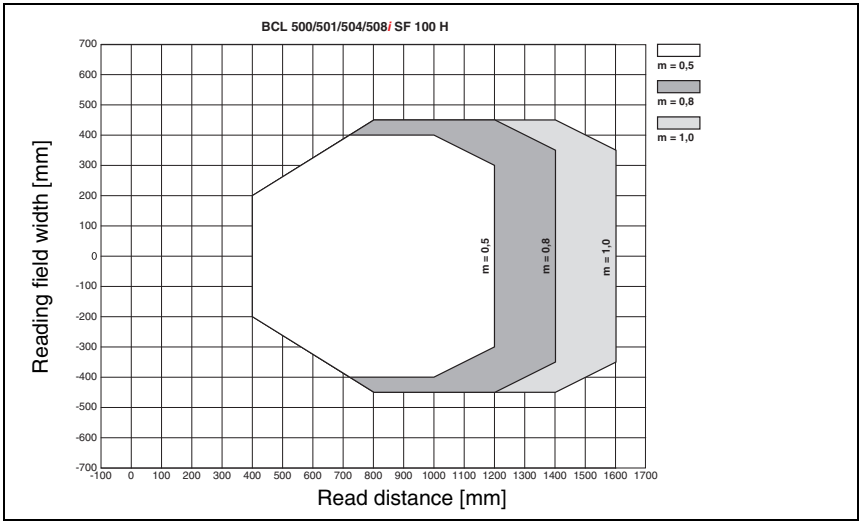

Figure 5.27: "Low Density" reading field curve for line scanner with heating (with deflection mirror)

The reading field curves apply for the reading conditions stated in table 5.8.

5.7.9 Low Density (F) Optics: BCL 508*i* OF 100 H

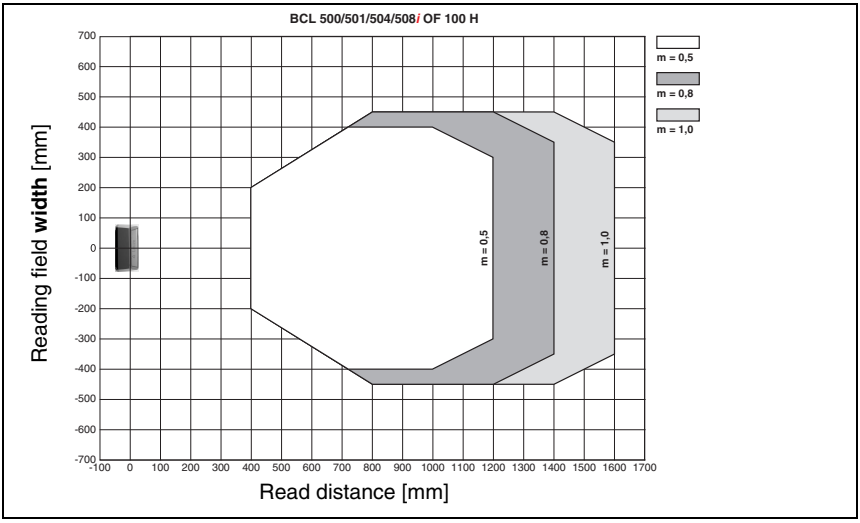

Figure 5.28: "Low Density" reading field curve for oscillating-mirror scanners with heating

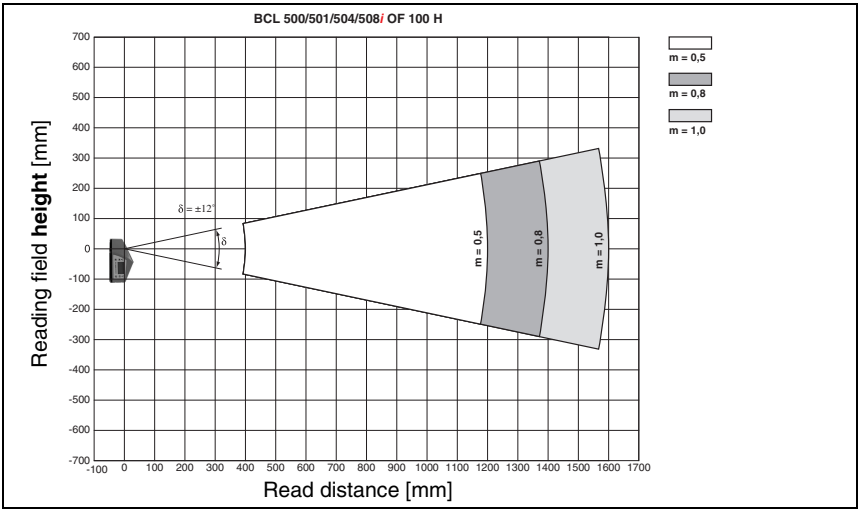

Figure 5.29: Lateral "Low Density" reading field curve for oscillating-mirror scanners with heating

The reading field curves apply for the reading conditions stated in table 5.8.

5.7.10 Ultra Low Density (L) Optics: BCL 508*i* SL 102 H

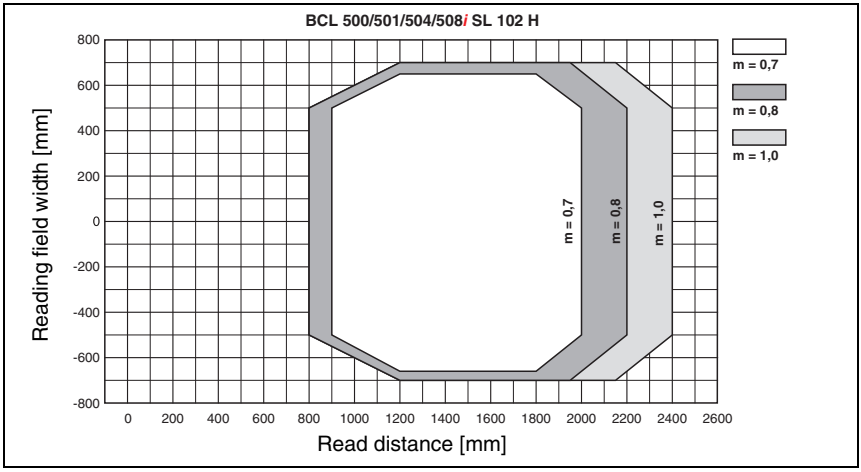

Figure 5.30: "Ultra Low Density" reading field curve for line scanner with heating (without deflection mirror)

The reading field curves apply for the reading conditions stated in table 5.8.

5.7.11 Ultra Low Density (L) Optics: BCL 508*i* OL 100 H

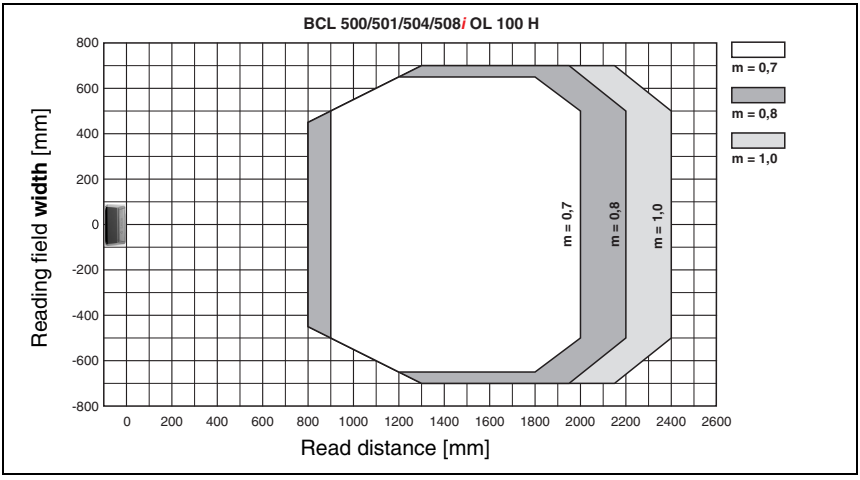

Figure 5.31: "Ultra Low Density" reading field curve for oscillating-mirror scanners with heating

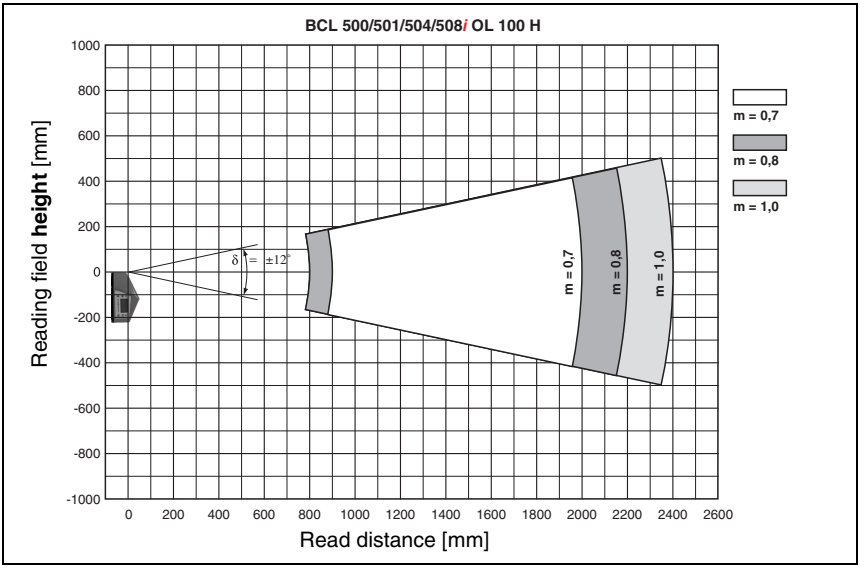

Figure 5.32: Lateral "Ultra Low Density" reading field curve for oscillating-mirror scanners with heating

The reading field curves apply for the reading conditions stated in table 5.8.

6 Installation and mounting

6.1 Storage, transportation

Attention!

When transporting or storing, package the device so that it is protected against collision and humidity. Optimum protection is achieved when using the original packaging. Heed the required environmental conditions specified in the technical data.

Unpacking

- *Check the packaging for any damage. If damage is found, notify the post office or shipping agent as well as the supplier.*
- *Check the delivery contents using your order and the delivery papers:*
  - Delivered quantity
  - Device type and model as indicated on the nameplate
  - Laser warning signs
  - Brief manual

The name plate provides information as to what BCL type your device is. For specific information, please refer to chapter 5.

Name plates of the barcode readers of the BCL 500i series

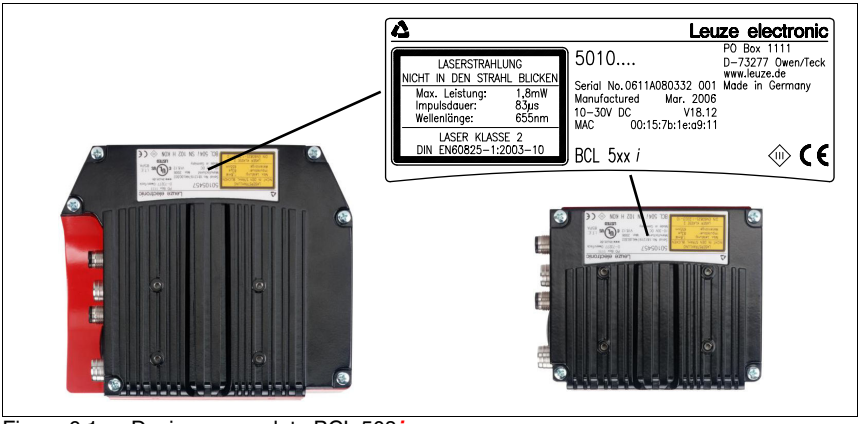

Figure 6.1: Device name plate BCL 508*i*

- *Save the original packaging for later storage or shipping.*

If you have any questions concerning your shipment, please contact your supplier or your local Leuze electronic sales office.

- *Observe the applicable local regulations when disposing of the packaging materials.*

6.2 Mounting the BCL 508*i*

The BCL 508*i* barcode readers can be mounted in two different ways:

- Using two M4x6 screws on the rear of the device or using four M4x6 screws on the bottom of the device.
- Using a BT 56 mounting device on the two fastening grooves.

6.2.1 Fastening with M4 x 6 screws

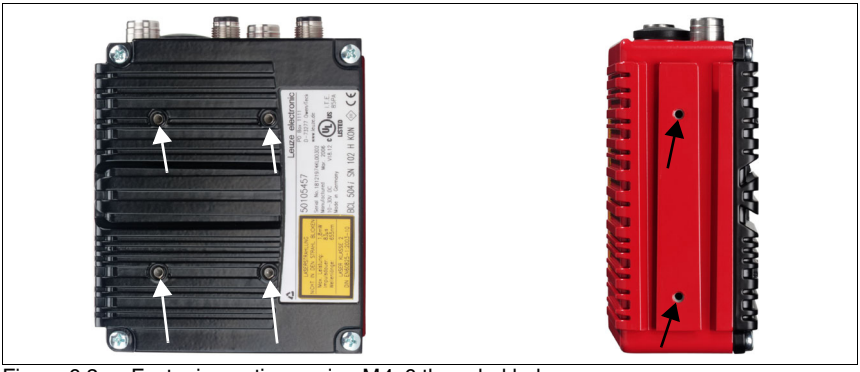

Figure 6.2: Fastening options using M4x6 threaded holes

6.2.2 BT 56 mounting device

The BT 56 mounting device is available for mounting the BCL 508*i* using the fastening grooves. It is designed for rod installation (Ø 16mm to 20mm). For ordering instructions, please refer to chapter "Type overview and accessories" on page 136.

BT 56 mounting device

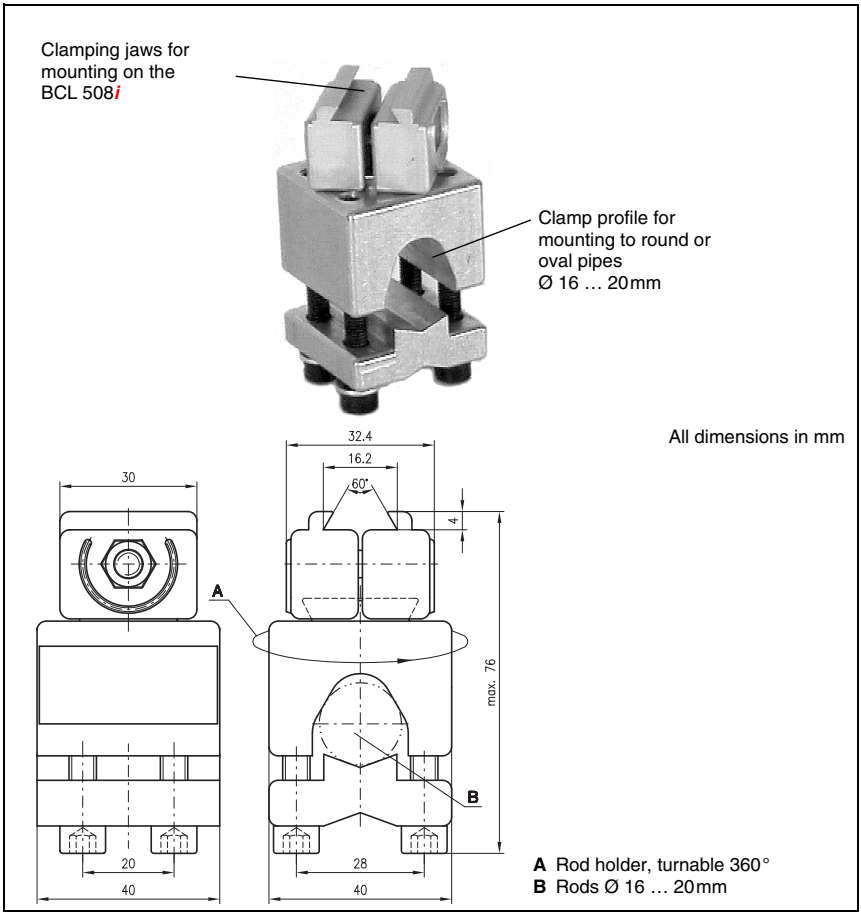

Figure 6.3:BT 56 mounting device

Figure 6.4: Mounting example BCL 508*i*

Notice!

When mounting, ensure that the scanning beam is not reflected directly back to the scanner by the label which is being read. For further information, see the notices in chapter 6.3!: Please refer to chapter 5.6 for the permissible minimum and maximum distances between the BCL 508i and the labels to be read.

6.3 Device arrangement

6.3.1 Selecting a mounting location

In order to select the right mounting location, several factors must be considered:

- Size, orientation, and position tolerance of the barcodes on the objects to be scanned.
- The reading field of the BCL 508*i* in relation to the barcode module width.
- The resulting minimum and maximum reading distance from the respective reading field (see chapter 5.5 "Reading field curves / optical data").
- The permissible line lengths between the BCL 508*i* and the host system depending on which interface is used.
- The correct time for data output. The BCL 508*i* should be positioned in such a way that, taking into consideration the time required for data processing and the conveyor belt speed, there is sufficient time to e.g. initiate sorting operations on the basis of the read data.
- The display and control panel should be very visible and accessible.
- For configuring and commissioning with the webConfig tool, the USB interface should be easily accessible.

For specific information, please refer to chapter 4.4.

Notice!

The beam exits the BCL 508i as follows for the respective devices:
*- line scanner **parallel** to the **housing base***
*- oscillating mirror and deflection mirror **perpendicular** to the **housing base***
The black areas in figure 6.1 are the housing base. The best read results are obtained when:

- *The BCL 508i is mounted in such a way that the scanning beam is incident on the barcode at an angle of inclination greater than ±10° … 15° to vertical.*
- *The reading distance lies in the middle area of the reading field.*
- *The barcode labels are of good print quality and have good contrast ratios.*
- *You do not use high-gloss labels.*
- *There is no direct sunlight.*

6.3.2 Avoiding total reflection – Line scanner

The barcode label must be positioned at an angle of inclination greater than ±10° … 15° from vertical in order to avoid total reflection of the laser beam (see figure 6.5)!

Total reflection occurs whenever the laser light of the barcode reader is directly incident on the surface of the barcode at an angle of 90°. The light directly reflected by the barcode may overload the barcode reader and thereby cause non-readings!

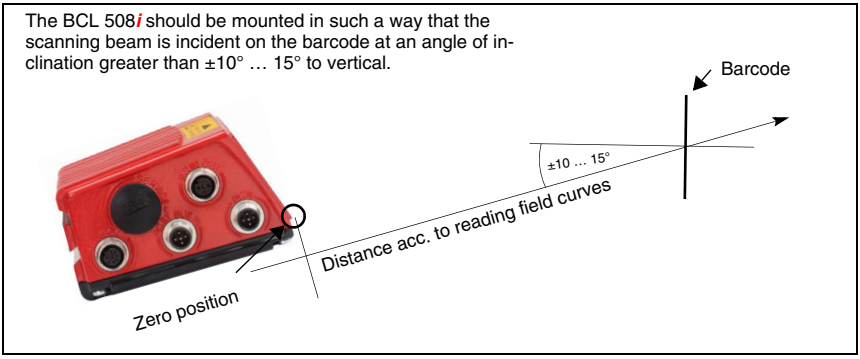

Figure 6.5: Total reflection – line scanner

6.3.3 Avoiding total reflection – oscillating/deflection-mirror scanner

For the BCL 508i with **oscillating/deflection mirror**, the laser beam exits at an angle of **90° to vertical**.

For the BCL 508i with **deflection mirror**, it is also possible to **use software to adjust the direction of the beam by ±10°**.

For the BCL 508i with **oscillating mirror**, the **swivel range of ±20°** (±12° for devices with heating) **is to be taken into account**.

This means that in order to be on the safe side and to avoid total reflection, the BCL 508i with oscillating/deflection mirror must be inclined upward or downward 20° … 30°!

Notice!

Mount the BCL 508i with oscillating/deflection mirror in such a way that the outlet window of the barcode reader is parallel to the object. This will result in an angle of inclination of approx. 25°.

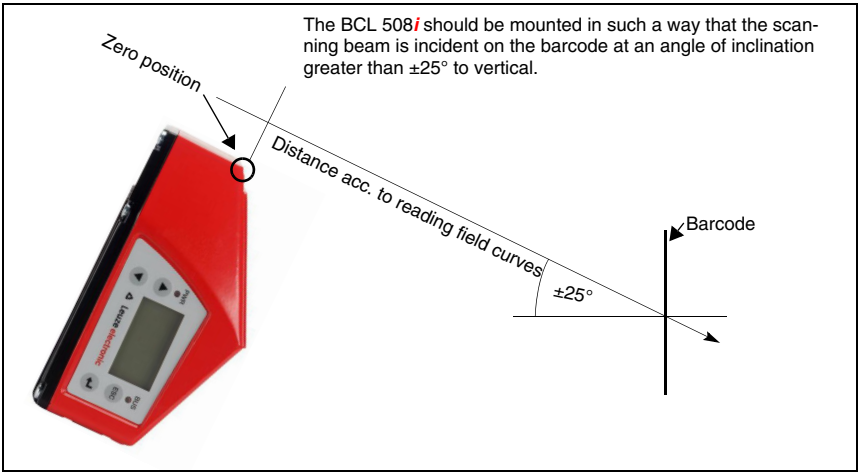

Figure 6.6: Total reflection – BCL 508*i* with oscillating/deflection mirror

6.3.4 Mounting location

When selecting a mounting location, pay attention to:

- *Maintaining the required environmental conditions (temperature, humidity).*
- *Possible soiling of the reading window due to liquids, abrasion by boxes, or packaging material residues.*
- *Lowest possible chance of damage to the BCL 508i by mechanical collision or jammed parts.*
- *Possible extraneous light (no direct sunlight or sunlight reflected by the barcode).*

6.3.5 Devices with integrated heating

For devices with integrated heating, also observe the following points:

- Mount the BCL 508*i* in a way which provides maximum thermal isolation, e.g. using rubber-bonded metal.
- Mount in such a way that the device is protected from draughts and wind; mount additional shields if necessary.

Notice!

When installing the BCL 508i in a protective housing, it must be ensured that the scanning beam can exit the protective housing without obstruction.

6.3.6 Maximum permissible read angles between BCL 508*i* and barcode

The optimum alignment of the BCL 508*i* is accomplished when the scan line scans the code bars almost at a right angle (90°). All read angles that are possible between the scan line and barcode must be taken account (figure 6.7).

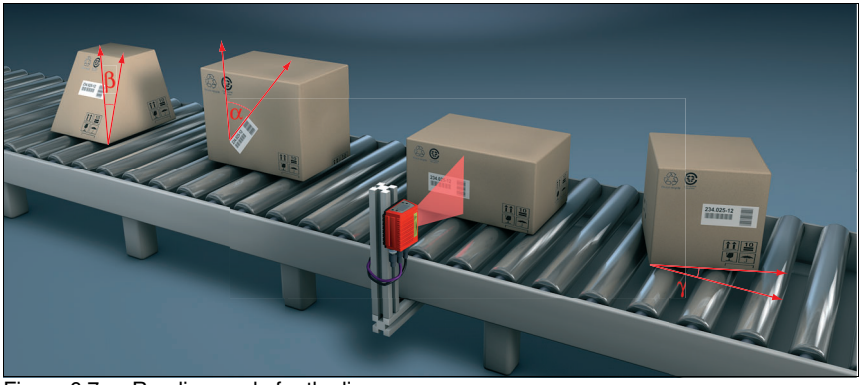

Figure 6.7: Reading angle for the line scanner

α Tilt - max. 45°

β Pitch - max. 45°

γ Skew - max. 45°

In order to avoid total reflection, the skew γ should be greater than 10°

6.4 Attaching laser warning sign

Attention Laser!

Follow the safety notices in chapter 2.

↳ *It is important that you attach the sticky labels supplied to the device (laser warning signs and laser emission symbol)! If the signs would be covered due to the installation situation of the BCL 508i, attach them instead in the immediate vicinity of the BCL 508i in such a way that it is not necessary to look into the laser beam when reading the notices!*

6.5 Cleaning

↳ *Clean the glass window of the BCL 508i with a soft cloth after mounting. Remove all packaging remains, e.g. carton fibres or Styrofoam balls. In doing so, avoid leaving fingerprints on the front cover of the BCL 508i.*

Attention!

Do not use aggressive cleaning agents such as thinner or acetone for cleaning the device.

7 Electrical connection

The barcode readers of the BCL 500*i* series are connected using variously coded M12 connectors. This ensures unique connection assignments.

The additional USB interface is used for configuring the device.

For the locations of the individual device connections, please refer to the device detail shown below.

Notice!

The corresponding mating connectors and ready-made cables are available as accessories for all connections. For additional information, refer to chapter chapter 13.

Figure 7.1: Location of the electrical connections

7.1 Safety notices for the electrical connection

Attention!

Do not open the device yourself under any circumstances! There is otherwise a risk of uncontrolled emission of laser radiation from the device. The housing of the BCL 508i contains no parts that need to be adjusted or maintained by the user.

Before connecting the device please ensure that the supply voltage matches the value printed on the nameplate.

Connection of the device and cleaning must only be carried out by a qualified electrician.

Ensure that the functional earth (FE) is connected correctly. Unimpaired operation is only guaranteed when the functional earth is connected properly.

If faults cannot be cleared, the device should be switched off from operation and protected against accidental use.

Attention!

For UL applications, use is permitted exclusively in Class 2 circuits according to NEC (National Electric Code).

The barcode readers of the BCL 500i series are designed in accordance with safety class III for supply by PELV (protective extra-low voltage with reliable disconnection).

Notice!

Protection class IP 65 is achieved only if the connectors and caps are screwed into place!

7.2 Electrical connection of the BCL 508*i*

As a network participant, the BCL 508*i* is equipped with four M12 plugs / sockets which are A- and D-coded.

The voltage supply (**PWR**) as well as the four freely configurable switching inputs/outputs (**SW IN/OUT** and **PWR**) are connected there.

"**HOST / BUS IN**" is available as an Ethernet interface for connecting to the host system.

By means of the implemented switch function in the BCL 508*i*, an additional second "**BUS OUT**" Ethernet interface is available for creating a scanner network (linear topology).

A USB connection serves as a "SERVICE" interface.

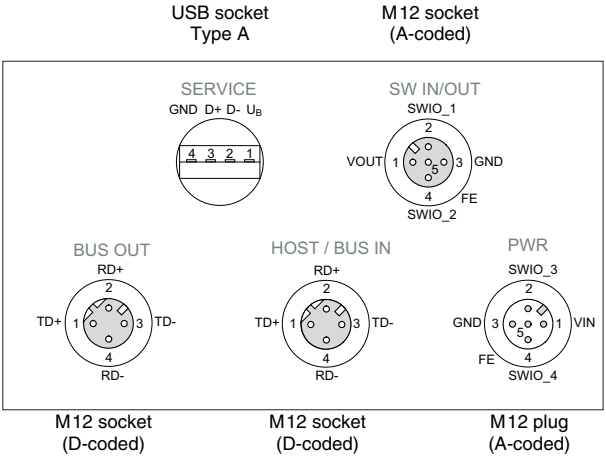

Figure 7.2: Connections of the BCL 508*i*

Described in detail in the following are the individual connections and pin assignments.

7.2.1 PWR – Voltage supply and switching input/outputs 3 and 4

PWR (5-pin connector, A-coded)			
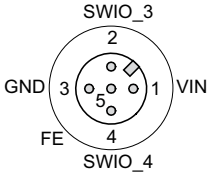 **M12 plug (A-coded)**	**Pin**	**Name**	**Remarks**
	1	VIN	Positive supply voltage +10 … +30 VDC
	2	SWIO_3	Configurable switching input / output 3
	3	GND	Negative supply voltage 0 VDC
	4	SWIO_4	Configurable switching input / output 4
	5	FE	Functional earth
	Thread	FE	Functional earth (housing)

Table 7.1: Pin assignment PWR

Supply voltage

Attention!

For UL applications, use is permitted exclusively in Class 2 circuits according to NEC (National Electric Code).

The barcode readers of the BCL 500i … series are designed in accordance with safety class III for supply by PELV (protective extra-low voltage with reliable disconnection).

Connecting functional earth FE

↳ *Ensure that the functional earth (FE) is connected correctly. Unimpaired operation is only guaranteed when the functional earth is connected properly. All electrical disturbances (EMC couplings) are discharged via the functional earth connection.*

Switching input / output

The barcode readers of the BCL 500*i* series are equipped with four freely programmable, opto-decoupled switching inputs and outputs **SWIO_1 … SWIO_4**.

The switching inputs can be used to activate various internal functions of the BCL 508*i* (decoding, autoConfig, …). The switching outputs can be used to signal the state of the BCL 508*i* and to implement external functions independent of the primary control.

The two switching inputs/outputs **SWIO_1** and **SWIO_2** are located on the **SW IN/OUT** M12 socket and are described in chapter 7.2.3. The other two (**SWIO_3** and **SWIO_4**) of the four freely configurable switching inputs/outputs are located on the **PWR** M12 connector.

Notice!

The respective function as input or output can be set via the display or with the aid of the webConfig tool!

Described in the following is the external wiring for use as a switching input or output; the respective function assignments to the switching inputs/outputs can be found in chapter 10.

Function as switching input

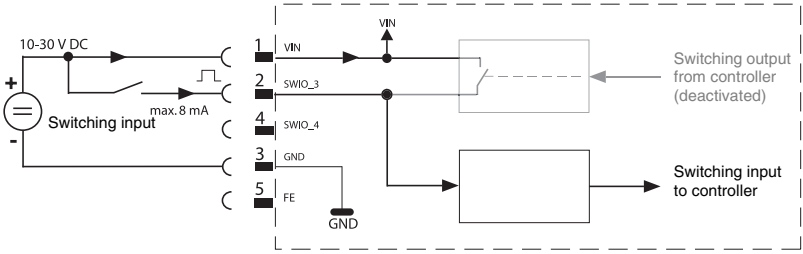

Figure 7.1: Switching input connection diagram SWIO_3 and SWIO_4

↳ *If you use a sensor with a standard M12 connector, please note the following:*

- Pins 2 and 4 must not be operated as switching outputs if sensors which function as inputs are also connected to these pins.

If, for example, the inverted sensor output is connected to pin 2, and pin 2 of the barcode reader is, at the same time, configured as an output (and not as an input), the switching output malfunctions.

Attention!

The maximum input current must not exceed 8 mA!

Function as switching output

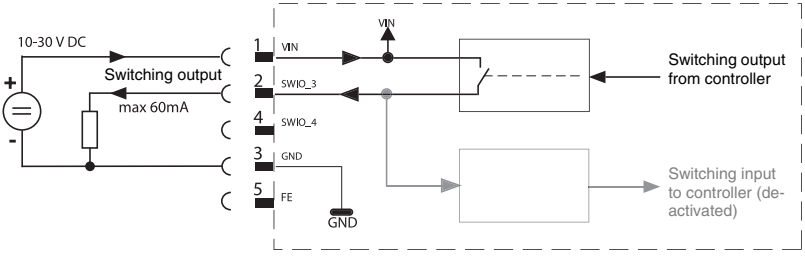

Figure 7.2: Switching output connection diagram SWIO_3 / SWIO_4

Attention!

Each configured switching output is short-circuit proof! Do not load the respective switching output of the BCL 508i with more than 60 mA at +10 … +30 VDC in normal operation!

Notice!

Both switching inputs/outputs SWIO_3 and SWIO_4 are configured by default in such a way that:

- Switching input SWIO_3 activates the reading gate.
- Switching output SWIO_4 switches by default on "No Read"

7.2.2 SERVICE – USB interface (type A)

SERVICE – USB interface (type A)			
SERVICE GND D+ D- U_B 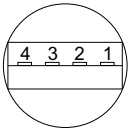	**Pin**	**Name**	**Remarks**
	1	VB	Positive supply voltage +5VDC
	2	D-	Data -
	3	D+	Data +
	4	GND	Ground

Table 7.2: Pin assignments of SERVICE – USB interface

Attention!

Maximum load of the +5VDC supply voltage of the Service - USB interface is 200mA!

↳ *Ensure adequate shielding.*

The entire connection cable must absolutely be shielded acc. to the USB specifications. Line length must not exceed 3m.

↳ *Use the Leuze-specific **USB service cable** (see chapter 13 "Type overview and accessories") for the connection and use a service PC to configure.*

Notice!

IP 65 is achieved only if the connectors and caps are screwed into place. Alternatively, a parameter memory in the form of a USB memory stick certified by Leuze electronic GmbH + Co. can be connected to the provided USB service interface. With this Leuze memory stick, protection class IP 65 is also ensured. For further information, please refer to chapter 4.7 and chapter 10.5.2 of this documentation!

7.2.3 SW IN/OUT – Switching input/switching output

SW IN/OUT (5-pin socket, A-coded)			
SW IN/OUT 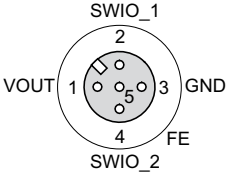 **M12 socket (A-coded)**	**Pin**	**Name**	**Remarks**
	1	VOUT	Voltage supply for sensors (VOUT identical to VIN at PWR IN)
	2	SWIO_1	Configurable switching input / output 1
	3	GND	GND for the sensors
	4	SWIO_2	Configurable switching input / output 2
	5	FE	Functional earth
	Thread	FE	Functional earth (housing)

Table 7.3: Pin assignment SW IN/OUT

ПРОМЭЛЕКТРОНИКА / sales@prom-elec.com

The barcode readers of the BCL 500*i* series are equipped with four freely programmable, opto-decoupled switching inputs and outputs **SWIO_1 … SWIO_4**.

The two switching inputs/outputs **SWIO_1** and **SWIO_2** are located on the **SW IN/OUT** M12 socket. The other two (**SWIO_3** and **SWIO_4**) of the four freely configurable switching inputs/outputs are located on the **PWR** M12 connector and are described in chapter 7.2.1.

Described in the following is the external wiring for use as a switching input or output; the respective function assignments to the switching inputs/outputs can be found in chapter 10.

Function as switching input

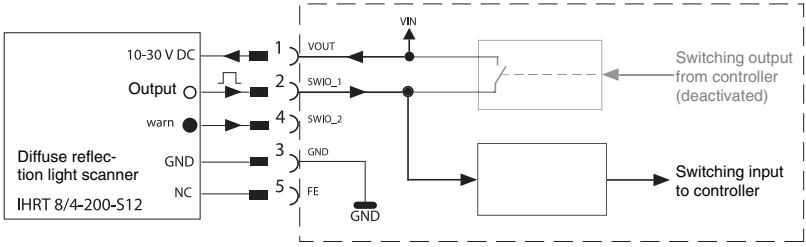

Figure 7.3: Switching input connection diagram SWIO_1 and SWIO_2

If you use a sensor with a standard M12 connector, please note the following:

- Pins 2 and 4 must not be operated as switching outputs if sensors which function as inputs are also connected to these pins.

If, for example, the inverted sensor output is connected to pin 2, and pin 2 of the barcode reader is, at the same time, configured as an output (and not as an input), the switching output malfunctions.

Attention!

The maximum input current must not exceed 8 mA!

Function as switching output

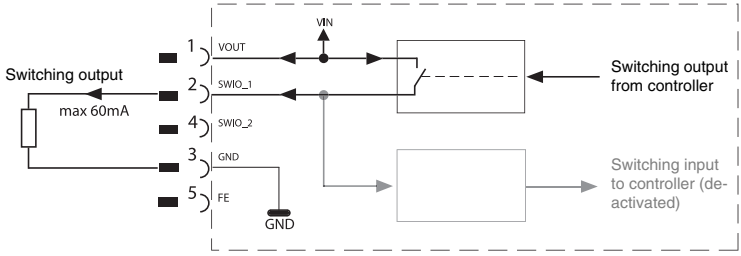

Figure 7.4: Switching output connection diagram SWIO_1 / SWIO_2

Attention!

Each configured switching output is short-circuit proof! Do not load the respective switching output of the BCL 500i with more than 60 mA at +10 … +30 VDC in normal operation!

Notice!

*Both switching inputs/outputs SWIO_1 and SWIO_2 are configured by default in such a way that they function as **switching inputs**:*

- Switching input **SWIO_1** activates the **start reading gate** function
- Switching input **SWIO_2** activates the **reference code teach-in** function

The functions of the individual switching inputs/outputs are programmed via the display or via configuration in the webConfig tool under the Switching input or Switching output heading.

For further information, see also "Commissioning and configuration" on page 105.

7.2.4 HOST / BUS IN for BCL 508*i*

The BCL 508*i* makes either the Ethernet interface available as host interface.

HOST / BUS IN (4-pin socket, D-coded)			
HOST / BUS IN RD+ 2 TD+ 1 3 TD- 4 RD- **M12 socket (D-coded)**	**Pin**	**Name**	**Remarks**
	1	TD+	Transmit Data +
	2	RD+	Receive Data +
	3	TD-	Transmit Data -
	4	RD-	Receive Data -
	Thread	FE	Functional earth (housing)

Table 7.4: Pin assignment HOST / BUS IN BCL 500*i*

↳ *For the host connection of the BCL 508i, the "KB ET - … - SA-RJ45" ready-made cables are preferred, see table 13.8 "Bus connection cables for the BCL 508i" on page 140.*

Ethernet cable assignments

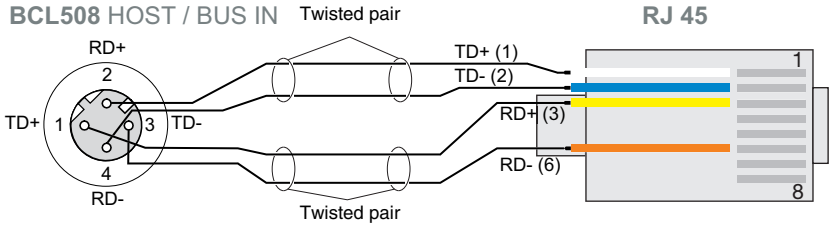

Figure 7.5: HOST / BUS IN cable assignments on RJ-45

Notice for connecting the Ethernet interface!

Ensure adequate shielding. The entire connection cable must be shielded and earthed. The RD+/RD- and TD+/TD- wires must be stranded in pairs.
Use CAT 5 cable for the connection.

7.2.5 BUS OUT for the BCL 508*i*

To set up an Ethernet network with other participants with linear topology, the BCL 508*i* makes available another Ethernet interface. The use of this interface drastically reduces the cabling requirements, as only the first BCL 508*i* requires a direct connection to the switch, via which it can communicate with the host. All other BCL 508*i* are connected in series to the first BCL 508*i*, see figure 7.7.

BUS OUT (4-pin socket, D-coded)			
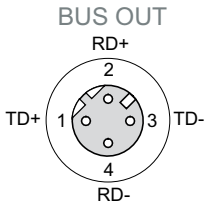	**Pin**	**Name**	**Remarks**
	1	TD+	Transmit Data +
	2	RD+	Receive Data +
	3	TD-	Transmit Data -
	4	RD-	Receive Data -
	Thread	FE	Functional earth (housing)

Table 7.5: Pin assignment BUS OUT

↳ *For the connection of two BCL 508i, the "KB ET - … - SSA" ready-made cables are preferred, see table 13.8 "Bus connection cables for the BCL 508i" on page 140.*

If you use user-configurable cables, note the following:

Notice!

Ensure adequate shielding. The entire connection cable must be shielded and earthed. The signal lines must be stranded in pairs.
Use CAT 5 cable for the connection.

Notice!

For the BCL 508i as standalone device or as the last participant in a linear topology, termination on the BUS OUT socket is not mandatory!

7.3 Ethernet topologies

The BCL 508*i* can be operated as a single device (standalone) in an Ethernet star topology with individual IP address.

The IP address can either be set permanently via the display or webConfig tool or assigned dynamically via a DHCP server.

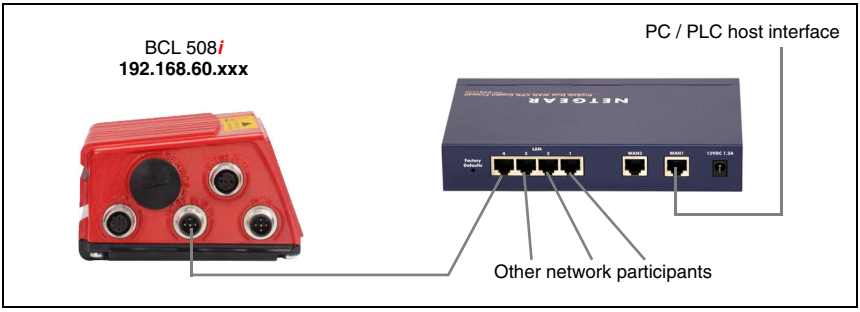

Figure 7.6: Ethernet with star topology

The innovative further development of the BCL 508*i* with integrated switch functionality offers the option of networking multiple barcode readers of type BCL 508*i* with one another. In addition to the classic "star topology", a "linear topology" is also possible.

This makes wiring the network easy and inexpensive as slaves are connected to one another in parallel.

The maximum length of a segment (connection from the hub to the last participant) is limited to 100 m.

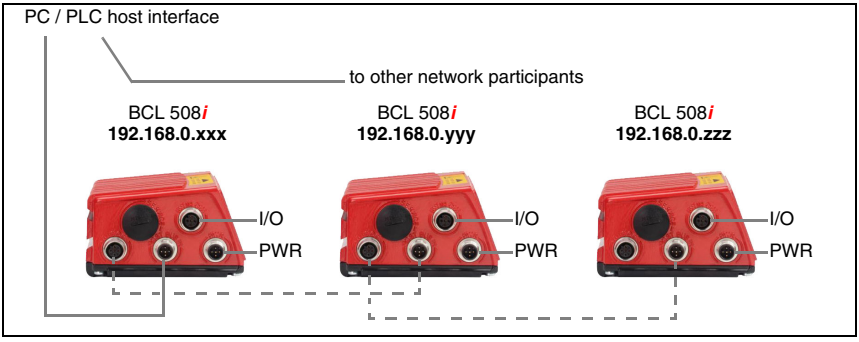

Figure 7.7: Ethernet with linear topology

Up to 254 barcode readers can be networked. For this purpose, each participating BCL 508*i* is assigned the respective network address via the display and the control panel or the webConfig tool. This address must be specified by the network administrator. Alternatively, the BCL 508*i* can also be configured as a DHCP client and then automatically receive its address from a DHCP server.

Information on the necessary configuration steps can be found in chapter 10.

7.3.1 Ethernet wiring

A Cat. 5 Ethernet cable should be used for wiring.

For the connection on the BCL 508*i*, a "KDS ET M12 / RJ 45 W - 4P" adapter is available into which the standard network cable can be plugged.

If no standard network cables are to be used (e.g. due to lacking IP… protection class), you can use the "KB ET - … - SA" user-configurable cable on the BCL 508*i*, see table 13.8 "Bus connection cables for the BCL 508i" on page 140.

The individual BCL 508*i* devices in a linear topology are connected with the "KB ET - … - SSA" cable, see table 13.8 "Bus connection cables for the BCL 508i" on page 140.

For unavailable line lengths, you can configure your cables yourself. When doing so, make certain that you connect **TD+** on the M12 connector with **RD+** on the RJ-45 connector and **TD-** on the M12 connector with **RD-** on the RJ-45 connector, respectively, etc.

Notice!

Use the recommended connectors / sockets or the ready-made lines (see chapter 13 "Type overview and accessories").

7.4 Line lengths and shielding

↳ *Observe the following maximum line lengths and shielding types:*

Connection	Interface	Max. line length	Shielding
BCL – service	USB	3m	shielding absolutely necessary acc. to USB specifications
BCL – host	Ethernet	100m	absolutely required, shielded
Network from the first BCL to the last BCL	Ethernet	The max. segment length must not exceed 100m for 10Base-T twisted pairs (min. Cat. 3) and 100Base-TX twisted pair (min. Cat. 5)	absolutely required, shielded
BCL – power supply unit		30m	not necessary
Switching input		10m	not necessary
Switching output		10m	not necessary

Table 7.6: Line lengths and shielding

8 Display and control panel

8.1 Structure of the control panel

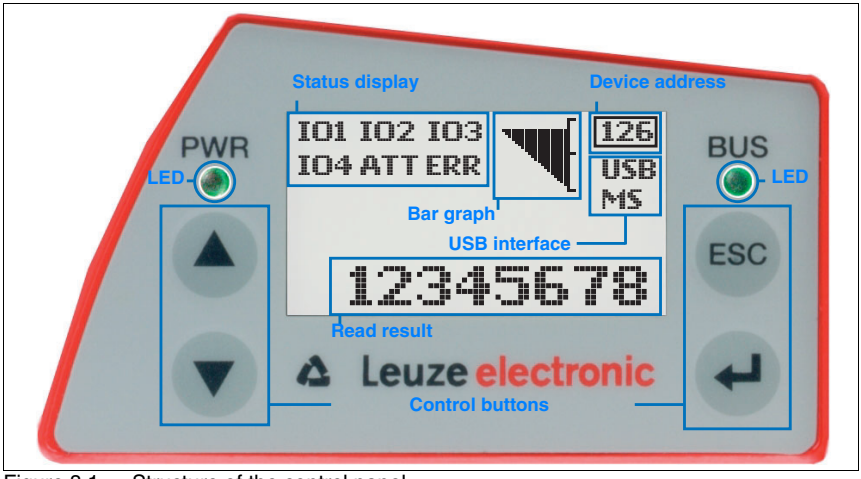

Figure 8.1: Structure of the control panel

8.2 Status display and operation

8.2.1 Indicators in the display

Status displays of the switching inputs/outputs

IO1 Switching input or switching output 1 active (function dependent on set configuration).
Default: Switching input with the "Reading gate activation" function

IO2 Switching input or switching output 2 active (function dependent on set configuration).
Default: Input with the "Teach-in" function

IO3 Switching input or switching output 3 active (function dependent on set configuration).
Default: Switching input with the "Reading gate activation" function

IO4 Switching input or switching output 4 active (function dependent on set configuration).
Default: Switching output with the "No read" function

ATT Warning (Attention)

ERR Internal device error (Error) -> The device must be sent in for inspection

Status display of the USB interface

USB The BCL 508*i* is connected to a PC via the USB interface.
MS An external parameter memory is properly connected to the USB interface of the BCL 508*i*.

Read result

The read barcode information is displayed.

Device address

This display has no meaning with the BCL 508*i*. A separate menu item is available for displaying the network data.

8.2.2 LED status indicators

PWR LED

PWR	**off**	**Device OFF** - no supply voltage
PWR	**flashes green**	**Device ok, initialisation phase** - no barcode reading possible - voltage connected - self test running - initialisation running
PWR	**green continuous light**	**Device ok** - barcode reading possible - self test successfully finished - device monitoring active
PWR	**orange continuous light**	**Service mode** - barcode reading possible - configuration via the USB service interface - configuration via the display - no data on the host interface
PWR	**flashes red**	**Device ok, warning set** - barcode reading possible - temporary operating fault
PWR	**red continuous light**	**Device error / parameter enable** - no barcode reading possible

BUS LED

BUS	**off**	**No supply voltage** - no communication possible - Ethernet protocols not released
BUS	**flashes green**	**Initialisation** - of the BCL 508*i*, establishing communication
BUS	**green continuous light**	**Operation ok** - Network operation ok - Connection and communication to Host established
BUS	**flashes red**	**Communication error** - temporary connection error - if DHCP is active, no address could be obtained
BUS	**red continuous light**	**Network error** - Network error - no connection established - no communication possible

8.2.3 Control buttons

▲	**Up**	**Navigate upward/laterally.**
▼	**Down**	**Navigate downward/laterally.**
ESC	**ESC**	**Exit menu item.**
↵	**ENTER**	**Confirm/enter value, change menu levels.**

Navigating within the menus

The menus within a level are selected with the up/down buttons ▲ ▼.
The selected menu item is activated with the enter button ↵.
Press the ESC button ESC to move up one menu level.
When one of the buttons is actuated, the display illumination is activated for 10 min.

Setting values

If input of a value is possible, the display looks like this:

```
0000|
   <-0123456789  save
Standard ----- Unit
  0000  |    |
```

Use the ▲▼ and ↵ buttons to set the desired value. An accidental, incorrect entry can be corrected by selecting <-| and then pressing ↵.
Then use the ▲▼ buttons to select save and save the set value by pressing ↵.

Selecting options

If options can be selected, the display looks like this:

```
o OFF
  ON
Standard ----- Unit
   OFF  |    |
```

Select the desired option with the ▲▼ buttons. Activate the option by pressing ↵.

8.3 Menu description

After voltage is applied to the barcode reader, a startup screen is displayed for several seconds. The display then shows the barcode reading window with all status information.

8.3.1 The main menus

```
BCL508i SF 102
Leuze electronic
     GmbH & Co. KG
SW: V 1.3.1  HW:1
SN: 0704-081894 001
```

Device information - main menu

This menu item contains detailed information on
- Device type
- Software version
- Hardware version
- Serial number

```
Network settings
Channel 1:

Addr:     192.168.60.101
Mask:     255.255.255.0
Gateway:  0.0.0.0
```

Network settings - main menu
- Display of the network settings

See "Ethernet" on page 94.

```
IO1 IO2  IO3        31
IO4 ATT ERR

          12345678
```

Barcode reading window - main menu
- Visualisation of the read barcode information
- Status overview of the switching inputs/outputs
- Bar graphs for read quality of the current barcode.

See "Indicators in the display" on page 82.

```
Parameter                1
  Parameter handling
  Decoder table
  Digital SWIO
  Ethernet
```

Parameter - main menu
- Configuration of the barcode reader.

See "Parameter menu" on page 87.

```
Language selection
o Deutsch
o English
o Español
o Français
o Italiano
```

Language selection - main menu
- Selection of the display language.

See "Language selection menu" on page 96.

Service - main menu

- Scanner diagnosis and status messages

See "Service menu" on page 96.

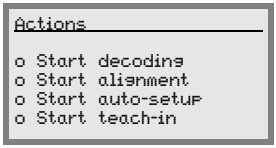

Actions main menu

- Various functions for scanner configuration and manual operation

See "Actions menu" on page 97.

Notice!

The rear cover *of this manual includes a* ***fold-out page*** *with the complete* ***menu structure****. It describes the menu items in brief.*
The display offers only limited configuration options. The configurable parameters are described here in chapter 8.3.
Only the webConfig tool provides complete configuration options and is largely self-explanatory. The use of the webConfig tool is described inchapter 9. Notes on commissioning via the webConfig tool can be found in chapter 10.

8.3.2 Parameter menu

Parameter handling

The `Parameter handling` submenu is used to lock and release the parameter input via the display and for resetting to default values.

Table 8.1: Parameter handling submenu

Level 3	Level 4	Level 5	Selection/configuration option Description	Standard
Parameter enabling			OFF/ON *The standard setting (OFF) prevents unintended parameter changes.* *If parameter enabling is activated (ON), parameters can be changed manually.*	OFF
Parameters to default			*By pressing the enter button ↵ after selecting Parameters to default, all parameters are reset to their standard settings without any further security prompts.* *In this case, English is selected as the display language.*	

Decoder table

In the `Decoder table` submenu, 4 different code type definitions can be stored. Barcodes that have been read can only be decoded if they correspond to one of the definitions stored here.

Table 8.2: Decoder table submenu

Level 3	Level 4	Level 5	Selection/configuration option *Description*	Standard
Max. no. of labels			Value between 0 and 64 *The value set here specifies the maximum number of labels that should be detected for each reading gate.*	1
Decoder 1	Symbology (Code type)		No code Code 2 of 5 interleaved Code 39 Code 32 Code UPC Code EAN Code 128 EAN Addendum Codabar Code 93 RSS 14 RSS Limited RSS Expanded *If No code is configured, the current and all subsequent decoders are deactivated.*	Code 2/5i
	Number of digits	Interval mode	OFF/ON *With the ON setting, the values in digits 1 and 2 define a range of character numbers that are to be read.*	OFF
		Digits 1	0 to 64 characters *First decodable number of characters or lower range limit.*	10
		Digits 2	0 to 64 characters *Second decodable number of characters or upper range limit.*	0
		Digits 3	0 to 64 characters *Third decodable number of characters.*	0
		Digits 4	0 to 64 characters *Fourth decodable number of characters.*	0
		Digits 5	0 to 64 characters *Fifth decodable number of characters.*	0
	Reading reliability		Value from 2 to 100 *Number or scans required to reliably detect a label.*	4

Table 8.2: Decoder table submenu

Level 3	Level 4	Level 5	Selection/configuration option *Description*	Standard
	Check digit method		Standard No check Depending on the symbology (code type) selected for the decoder, further calculation algorithms can be selected here. *Check digit method used for the decoding of the barcode that has been read.* *If Standard is set, the check digit method intended for the respective code type is used.*	Standard
	Check digit transm.		Standard Not standard *Specifies whether the check digit is transmitted. Standard means that the transmission matches the standard intended for the respective code type.*	Standard
Decoder 2	Symbology		*as decoder 1*	Code 39
	Number of digits	Interval mode	OFF/ON	ON
		Digits 1	0 to 64 characters	4
		Digits 2	0 to 64 characters	30
		Digits 3	0 to 64 characters	0
		Digits 4	0 to 64 characters	0
		Digits 5	0 to 64 characters	0
	Reading reliability		Value from 2 to 100	4
	Check digit method		*as decoder 1*	Standard
	Check digit transm.		*as decoder 1*	Standard
Decoder 3	Symbology		*as decoder 1*	Code 128
	Number of digits	Interval mode	OFF/ON	ON
		Digits 1	0 to 64 characters	4
		Digits 2	0 to 64 characters	63
		Digits 3	0 to 64 characters	0
		Digits 4	0 to 64 characters	0
		Digits 5	0 to 64 characters	0
	Reading reliability		Value from 2 to 100	4
	Check digit method		*as decoder 1*	Standard
	Check digit transm.		*as decoder 1*	Standard

Table 8.2: Decoder table submenu

Level 3	Level 4	Level 5	Selection/configuration option *Description*	Standard
Decoder 4	Symbology		*as decoder 1*	Code UPC
	Number of digits	Interval mode	OFF/ON	OFF
		Digits 1	0 to 64 characters	8
		Digits 2	0 to 64 characters	0
		Digits 3	0 to 64 characters	0
		Digits 4	0 to 64 characters	0
		Digits 5	0 to 64 characters	0
	Reading reliability		Value from 2 to 100	4
	Check digit method		*as decoder 1*	Standard
	Check digit transm.		*as decoder 1*	Standard

Digital SWIO

The Digital SWIO submenu is used to configure the 4 switching inputs/outputs of the BCL 508*i*.

Table 8.3: Digital SWIO submenu

Level 3	Level 4	Level 5	Selection/configuration option *Description*	Standard
Sw. input/ output 1	I/O mode		Input / Output / Passive *Determines the function of switching input/output 1.* *In the case of passive, the connection is on 0 V if the Inverted parameter is set to OFF, and on +UB if the Inverted parameter is set to ON.*	Input
	Switching input	Inverted	OFF / ON *OFF = activation of the switching input function upon high level at the switching input* *ON = activation of the switching input function upon low level at the switching input*	OFF
		Debounce time	Value from 0 to 1000 *Time in milliseconds for which the input signal must be present and stable.*	5
		Start-up delay	Value from 0 to 65535 *Time in milliseconds between the end of the debounce time and activation of the function configured below.*	0
		Pulse duration	Value from 0 to 65535 *Minimum activation time in milliseconds for the function configured below.*	0
		Switch-off delay	Value from 0 to 65535 *Time in milliseconds for which the function configured below remains activated after the switching input signal is deactivated and the pulse duration has expired.*	0
		Function	No BCL500i function Rd. gate start/stop Rd. gate stop Rd. gate start Teach reference code Autoconfig start/stop *The function set here is carried out after the switching input is activated.*	Reading gate start/stop

Table 8.3: Digital SWIO submenu

Level 3	Level 4	Level 5	Selection/configuration option *Description*	Standard
	Switching output	Inverted	OFF / ON *OFF = activated switching output upon high level* *ON = activated switching output upon low level*	OFF
		Signal delay	Value from 0 to 65535 *Time in milliseconds between activation function and switching of the switching output.*	0
		Pulse duration	Value from 0 to 65535 *Switch-on time of the switching output in milliseconds. If the Pulse duration is set to 0, the switching output is switched on via the Activation function and switched off via the Deactivation function.* *If the Pulse duration is greater than 0, the Deactivation function has no effect.*	400
		Activation function 1	No function Reading gate start Reading gate end Positive reference code comparison 1 Negative reference code comparison 1 Valid read result Invalid read result Device ready Device not ready Data transmission active Data transmission not active AutoCont. good quality AutoCont. bad quality Reflector detected Reflector not detected External event, pos. edge External event, neg. edge Device active Device standby No device error Device error Positive reference code comparison 2 Negative reference code comparison 2 *The function set here specifies which event activates the switching output.*	No function
		Deactivation function 1	See Activation function 1 for selection options *The function set here specifies the event that deactivates the switching output.*	No function

Table 8.3: Digital SWIO submenu

Level 3	Level 4	Level 5	Selection/configuration option *Description*	Standard
Sw. input/ output 2	I/O mode		Input / Output / Passive	Output
	Switching input	Inverted	OFF / ON	OFF
		Debounce time	Value from 0 to 1000	5
		Start-up delay	Value from 0 to 65535	0
		Pulse duration	Value from 0 to 65535	0
		Switch-off delay	Value from 0 to 65535	0
		Function	see switching input/output 1	No function
	Switching output	Inverted	OFF / ON	OFF
		Signal delay	Value from 0 to 65535	0
		Pulse duration	Value from 0 to 65535	400
		Activation function 2	see switching input/output 1	Valid read result
		Deactivation function 2	see switching input/output 1	Reading gate start
Sw. input/ output 3	I/O mode		Input / Output / Passive	Input
	Switching input	Inverted	OFF / ON	OFF
		Debounce time	Value from 0 to 1000	5
		Start-up delay	Value from 0 to 65535	0
		Pulse duration	Value from 0 to 65535	0
		Switch-off delay	Value from 0 to 65535	0
		Function	see switching input/output 1	Reading gate start/stop
	Switching output	Inverted	OFF / ON	OFF
		Signal delay	Value from 0 to 65535	0
		Pulse duration	Value from 0 to 65535	400
		Activation function 3	see switching input/output 1	No function
		Deactivation function 3	see switching input/output 1	No function
Sw. input/ output 4	I/O mode		Input / Output / Passive	Output
	Switching input	Inverted	OFF / ON	OFF
		Debounce time	Value from 0 to 1000	5
		Start-up delay	Value from 0 to 65535	0
		Pulse duration	Value from 0 to 65535	0
		Switch-off delay	Value from 0 to 65535	0
		Function	see switching input/output 1	No function
	Switching output	Inverted	OFF / ON	OFF
		Signal delay	Value from 0 to 65535	0
		Pulse duration	Value from 0 to 65535	400
		Activation function 4	see switching input/output 1	Invalid read result
		Deactivation function 4	see switching input/output 1	Reading gate start

Ethernet

The Ethernet submenu is used to configure the communication interfaces of the BCL 508*i*.

Table 8.4: Ethernet submenu

Level 3	Level 4	Level 5	Level 6	Selection/configuration option *Description*	Standard
Ethernet interface	IP address			The IP address can be set to any value in the xxx.xxx.xxx.xxx format. *Normally, the network administrator specifies the IP address that is to be set here. If DHCP is activated, the setting made here has no effect and the BCL 508i is set to the values that it obtains from the DHCP server.*	192.168.060.101
	Gateway			The gateway address can be set to any value in the xxx.xxx.xxx.xxx format. *The BCL 508i communicates with participants in other subnets via the gateway. Splitting the read application over multiple subnets is rather uncommon; the setting of the gateway address, thus, usually has no meaning.*	000.000.000.000
	Net mask			The net mask can be set to any value in the xxx.xxx.xxx.xxx format. *Usually, the BCL 508i is used in a private Class C network and the default setting can be accepted without change.* ***Attention**: It is possible to enter any values for xxx.xxx.xxx.xxx. Only the values 255 or 000 are permissible for xxx, however. If other values are set, an error message appears upon restart of the BCL 508i.*	255.255.255.000
	DHCP activated			Off/On *If DHCP is activated, the BCL 508i draws its settings for IP address, gateway and net mask from a DHCP server. The manual settings made above have no effect, but are retained and are again active if DHCP is deactivated.*	Off

Table 8.4: Ethernet submenu

Level 3	Level 4	Level 5	Level 6	Selection/configuration option *Description*	Standard
HOST communication	TcpIP	Activated		Off/On *TCP/IP communication with the host is activated.*	Off
		Mode		Server/client *Server defines the BCL 508i as TCP server: The primary host system (PC / PLC as client) actively establishes the connection and the connected BCL 508i waits for the connection to be setup. Under TcpIP Server -> Port number, you must also specify on which local port of the BCL 508i communication requests of a client application are accepted (host system).* *Client defines the BCL 508i as TCP client: The BCL 508i actively establishes the connection to the primary host system (PC / PLC as server). Under TcpIP Client, you must also specify the IP address of the server (host system) and the port number on which the server (host system) accepts a connection. In this case, the BCL 508i now determines when and with whom a connection is established!*	Server
		TcpIP client	IP address	The IP address can be set to any value in the xxx.xxx.xxx.xxx format. *IP address of the host system with which the BCL 508i exchanges data as TCP client.*	000.000.000.000
			Port number	The port number can be set to any value between 0 and 65535. *Port number of the host system with which the BCL 508i exchanges data as TCP client.*	10000
			Timeout	The timeout can be set to any value between 100 and 60,000ms. *Time after which an attempt to establish a connection is automatically interrupted by the BCL 508i if the server (host system) does not respond.*	1000ms
			Repetition time	The repetition time can be set to any value between 100 and 60,000ms. *Time after which another attempt is made to establish a connection.*	5000ms

Table 8.4: Ethernet submenu

Level 3	Level 4	Level 5	Level 6	Selection/configuration option *Description*	Standard
		TcpIP server	Port number	The port number can be set to any value between 0 and 65535. *Local port on which the BCL 508i accepts connection requests from a client application (host system) as TCP server.*	10000
	UDP	Activated		Off/On *Activates the connection-free UDP protocol which is suitable for e.g. transferring process data to the host. UDP and TCP/IP can be used in parallel.* *For network applications with changing partners or for only brief data transmissions, UDP is preferred as connection-free protocol.*	Off
		IP address		IP address of the host to which the data is to be transferred. The IP address can be set to any value in the xxx.xxx.xxx.xxx format. *Correspondingly, the host system (PC / PLC) requires the set IP address of the BCL 508i and the selected port number. By assigning these parameters, a socket is formed via which the data can be sent and received.*	000.000.000.000
		Port number		Port number of the host to which the data is to be transferred. The port number can be set to any value between 0 and 65535.	10001

8.3.3 Language selection menu

Currently, there are 5 display languages available:

- German
- English
- Spanish
- French
- Italian

The display language and the language of the webConfig user interface are synchronised. The setting in the display affects the webConfig tool and vice versa.

8.3.4 Service menu

Diagnostics

This menu item is used exclusively for service purposes by Leuze electronic.

Status messages

This menu item is used exclusively for service purposes by Leuze electronic.

8.3.5 Actions menu

Start decoding

Here, you can perform a single reading via the display.

↳ *Use the ↵ button to activate the single read operation and place a barcode in the reading field of the BCL 508i.*

The laser beam is switched on and the following display appears:

```
Actions
o Stop decoding
      zzzzzzzzz
```

Once the barcode is detected, the laser beam is switched off again. The read result zzzzzzzzz is shown directly in the display for about 1 s. After that, the Actions menu is displayed again.

Start alignment

The alignment function makes it easy to align the BCL 508*i* by optically displaying the read quality.

↳ *Use the ↵ button to activate the Justage (alignment) function and place a barcode in the reading field of the BCL 508i.*

At first, the laser beam is switched on continuously, enabling you to position the barcode securely in the reading field. Once the barcode is read, the laser beam is switched off briefly and the following display appears:

```
Actions
o Stop alignment
   xx   zzzzzzzzz
```

xx Read quality in % (scans with info)

zzzzzz: Contents of the decoded barcode.

Once the barcode has been detected, the laser beam starts to flash.

The flash frequency provides visual information on the read quality. The faster the laser beam flashes, the higher the read quality.

Start auto-setup

The auto-setup function provides an easy option for configuring the code type and number of digits of Decoder 1.

↳ *Use the ↵ button to activate the auto-setup function and place an unknown barcode in the reading beam of the BCL 508i.*

The following display appears:

```
Actions
o Stop auto-setup
xx yy zzzzzz
```

The following information is displayed:

xx	Code type of the detected code (sets the code type of Decoder 1)
'01'	2/5 Interleaved
'02'	Code 39
'06'	UPC (A, E)
'07'	EAN
'08'	Code 128, EAN 128
'10'	EAN/UPC
'11'	Codabar
yy	Number of digits of the detected code (sets the number of digits of Decoder 1)
zzzzzz:	Contents of the decoded label. A ↑ appears if the label was not correctly read.

Start teach-in

The teach-in function can be used to conveniently read reference code 1.

↳ *Use the ↵ button to activate the teach-in function and place a barcode which contains the content that you wish to store as the reference code in the reading beam of the BCL 508i.*

The following display appears:

```
Actions
o Stop teach-in
  RC13xxzzzzzz
```

The following information is displayed:

RC13	means that reference code number 1 is stored in RAM. This is always output.
xx	defined code type (see auto-setup)
z	defined code information (1 … 63 characters)

8.4 Operation

Shown here is an example describing important operating procedures in detail.

Parameter enabling

During normal operation parameters can only be viewed. If parameters need to be changed, the **ON** menu item in the **Parameter enabling** menu must be activated. To do this proceed as follows:

```
Parameter                1
  Parameter handling
  Decoder table
  Digital SWIO
```

In the parameter menu, use the ▲▼ buttons to select the Parameter handling menu item.

Press the enter button to enter the Parameter handling menu.

```
Parameter handling  1.1

o Parameter enabling
☐ Parameters to default
```

In the Parameter handling menu, use the ▲▼ buttons to select the Parameter enabling menu item.

Press the enter button to enter the Parameter enabling menu.

```
Parameter enabling
  OFF
o ON

Standard ----- Unit
   OFF  |    |
```

In the Parameter enabling menu, use the ▲▼ buttons to select the ON menu item.

Press the enter button to switch on parameter enabling.

```
Parameter enabling

  OFF
O ON

Standard ----- Unit
   OFF  |    |
```

The PWR LED lights up red. You can now set individual parameters via the display.

ESC ESC

Press the ESC button twice to return to the main menu.

Network configuration

Information on network configuration can be found in chapter "Commissioning and configuration" on page 105.

9 Leuze webConfig tool

With the **Leuze webConfig tool**, an operating-system independent, web-technology based, graphical user interface is available for configuring barcode readers of the **BCL 500*i*** series.

Through the use of HTTP as communication protocol and by using only standard technologies on the client side (HTML, JavaScript and AJAX), which are supported by all commonly used, modern browsers (e.g. **Mozilla Firefox** beginning with Version 1.5 or **Internet Explorer** beginning with Version 6.0), it is possible to operate the **Leuze webConfig tool** on any internet-ready PC.

9.1 Connecting the SERVICE USB interface

The connection to the SERVICE USB interface of the BCL 508*i* is established via the PC-side USB interface using a special USB cable with 2 type A/A connectors.

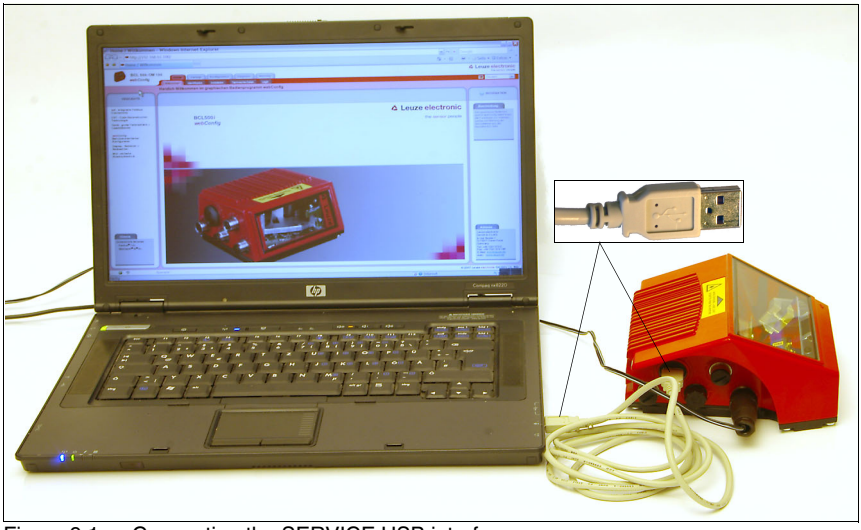

Figure 9.1: Connecting the SERVICE USB interface

9.2 Installing the required software

9.2.1 System requirements

Operating system:	Windows 2000 Windows XP (Home Edition, Professional) Windows Vista
Computer:	PC with USB interface version 1.1 or higher
Graphics card:	min. 1024 x 768 pixels or higher resolution
Required hard-disk capacity:	approx. 10MB

9.2.2 Installing the USB driver

In order for the BCL 508*i* to be automatically detected by the connected PC, the **USB driver** must be installed **once** on your PC. To do this, you must have **administrator privileges**.

Please proceed according to the following steps:

- *Start your PC with administrator privileges and log on.*
- *Load the CD included in the delivery contents of your BCL 508i in the CD drive and start the "setup.exe" program.*
- *Alternatively, you can also download the setup program from the internet at www.leuze.de.*
- *Follow the instructions provided by the setup program.*

Upon successful installation of the USB driver, a BCL 50xi icon automatically appears on the desktop.

To check: In the Windows Device Manager, a device called "Leuze electronic, USB Remote NDIS Network Device" appears under the "Network adapter" device class following successful USB registration.

9.3 Starting the webConfig tool

To start the **webConfig tool**, click the BCL 50xi icon located on the desktop. Make certain that the BCL 508*i* is connected to the PC via the USB interface and that voltage is connected.

Or alternatively: Open a browser on your PC and enter the following address: **192.168.61.100**

This is the default Leuze maintenance address for communication with barcode readers of the BCL 500*i* series.

In both cases, the following start page appears on your PC.

Figure 9.2: The start page of the webConfig tool

Notice!

The webConfig tool is completely contained in the firmware of the BCL 508i. Depending on firmware version, the start page may vary from that shown above.

The individual parameters are – where useful – graphically displayed in order to better illustrate the meaning of the what are often perceived as abstract parameters.

The result is an easy-to-use and practically-oriented user interface!

9.4 Short description of the webConfig tool

The webConfig tool has 5 main menus:

- Home
  with information on the connected BCL 508*i* as well as on installation. This information corresponds to the information in this handbook.
- Alignment
  for manually starting read processes and for aligning the barcode reader. The results of the read processes are displayed immediately. As a result, this menu item can be used to determine the optimum installation location.
- Configuration
  for adjusting decoding, for data formatting and output, switching inputs/outputs, communication parameters and interfaces, etc...
- Diagnostics
  for event logging of warnings and errors
- Maintenance
  for updating the firmware

The user interface of the webConfig tool is largely self-explanatory.

9.4.1 Module overview in the Configuration menu

The adjustable parameters of the BCL 508*i* are clustered in modules in the Configuration menu.

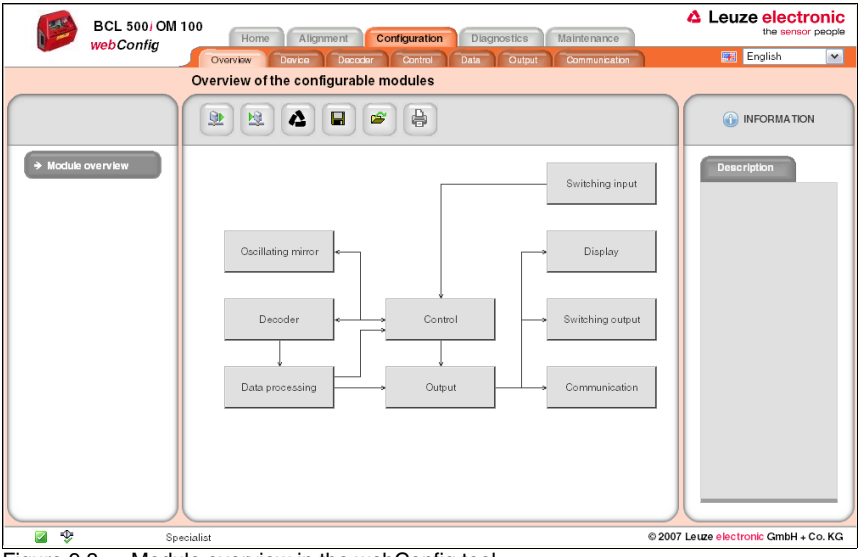

Figure 9.3: Module overview in the webConfig tool

Notice!

The webConfig tool is completely contained in the firmware of the BCL 508i. Depending on firmware version, the module overview may vary from that shown above.

The individual modules and their relationships to one another are graphically displayed in the module overview. The display is context sensitive, i.e. click a module to directly access the corresponding submenu.

An overview of the modules:

- `Decoder`
  Definition of code types, code-type features and number of digits of the labels that are to be decoded
- `Data processing`
  Filtering and processing of the decoded data
- `Output`
  Sorting of the processed data and comparison with reference codes
- `Communication`
  Formatting of the data for output via the communication interfaces
- `Control`
  Activation/deactivation of decoding
- `Switching input`
  Activation/deactivation of read processes
- `Switching output`
  Definition of events which activate/deactivate the switching output
- `Display`
  Formatting of the data for output on the display
- `Oscillating mirror` (optional)
  Adjustment of oscillating mirror parameters

10 Commissioning and configuration

Attention Laser!

Observe the safety notices in chapter 2!

This chapter describes basic configuration steps which you can carry out either via the webConfig tool or the display.

Via the webConfig tool

The most convenient way to configure the BCL 508*i* is via the webConfig tool. Only the webConfig tool gives you access to all settings of the BCL 508*i*. To use the webConfig tool, you need to establish a USB connection between the BCL 508*i* and a PC/laptop.

Notice!

Notes on the use of the webConfig tool can be found in chapter 9 "Leuze webConfig tool" on page 100

Via display

The display offers basic configuration options for the BCL 508*i*. Configuration via the display is appropriate if you simply want to configure reading tasks and you cannot or do not want to set up a USB connection between the BCL 508*i* and a PC/laptop.

Notice!

Notes on the use of the display can be found in chapter 8 "Display and control panel" on page 82. An overview of the menu structure and brief instructions for operating the display can be found in the two fold-out pages at the beginning and end of this technical description.

10.1 Measures to be performed prior to the initial commissioning

- *Before commissioning, familiarise yourself with the operation and configuration of the BCL 508i.*
- *Before connecting the supply voltage, recheck all connections and ensure that they have been properly made.*

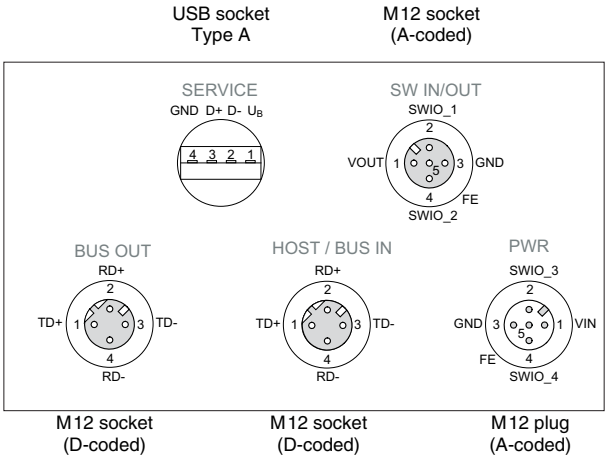

Figure 10.1: Connections of the BCL 508*i*

10.2 Starting the device

- *Connect the supply voltage +10 … 30 VDC (typ. +24 VDC); the BCL 508i starts up and the barcode reading window appears on the display:*

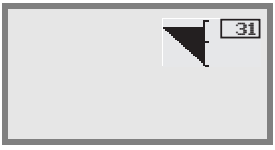

By default, parameter enabling is deactivated and you cannot change any settings. If you wish to carry out the configuration via the display, you must activate parameter enabling. Further information can be found in chapter "Parameter enabling" on page 99.

As a first step, you need to set the communication parameters of the BCL 508*i*.

10.3 Setting the communication parameters

With the communication parameters, you determine how data is exchanged between BCL 508*i* and host system, monitor PCs etc.

The communication parameters are **independent** of the topology in which the BCL 508*i* is operated (see "Ethernet topologies" on page 80).

10.3.1 Manually setting the IP address

If your system does not include a DHCP server or if the IP addresses of the devices are to be set permanently, proceed as follows:

- *Have the network administrator specify the data for IP address, net mask and gateway address of the BCL 508i.*
- *Set these values on the BCL 508i:*

Via webConfig tool

- *In the main menu, select Configuration, submenu Communication -> Ethernet interface.*

Notice!

*If the setting is performed via the webConfig tool, the BCL 508i must be **restarted**. Only after this restart is the set IP address accepted and does it become active.*

Or, alternatively, via the display

- *In the main menu, use the ▲▼ buttons to select the Parameter menu and use the enter button ↵ to activate the Parameter menu. The following screen appears:*

```
Parameter                1
  Parameter handling
  Decoder table
  Digital SWIO
o Ethernet
```

In the parameter menu, use the ▲▼ buttons to select the Ethernet menu item.

↵

Press the enter button to enter the Ethernet menu.

```
Ethernet

o Ethernet interface
  HOST communication
```

Use the ▲▼ buttons to select the Ethernet interface menu item.

↵

Press the enter button to enter the Ethernet interface menu.

```
Ethernet interface
o IP address
  Gateway
  Net mask
  DHCP activated
```

Use the ▲▼ buttons to successively select the IP address, Gateway and Net mask menu items and set the desired values.

ESC

Exit the Ethernet menu with the ESCAPE button.

```
Configuration changed:
System must be
restarted

   ok
   cancel
```

The message shown at the side appears. Confirm with OK to initiate a restart and to activate the changed configuration.

10.3.2 Automatically setting the IP address

If your system includes a DHCP server which is to be used to assign the IP addresses, proceed as follows:

↳ *In the main menu, use the ▲▼ buttons to select the Parameter menu and use the enter button ↵ to activate the Parameter menu. The following screen appears:*

```
Parameter                1
  Parameter handling
  Decoder table
  Digital SWIO
o Ethernet
```

In the parameter menu, use the ▲▼ buttons to select the `Ethernet` menu item.

↵

Press the enter button to enter the `Ethernet` menu.

```
Ethernet

o Ethernet interface
  HOST communication
```

Use the ▲▼ buttons to select the `Ethernet interface` menu item.

↵

Press the enter button to enter the `Ethernet interface` menu.

```
Ethernet interface
  IP address
  Gateway
  Net mask
o DHCP activated
```

Use the ▲▼ buttons to select the `DHCP activated` menu item.

↵

Press the enter button to enter the `DHCP activated` menu.

```
DHCP activated
o Off
  On

Standard ----- Unit
   OFF  |    |
```

Use the ▲▼ buttons to select `On` and press the enter button.

ESC

Exit the Ethernet menu with the ESCAPE button.

```
Configuration changed:
System must be
restarted

   ok
   cancel
```

The message shown at the side appears. Confirm with `OK` to initiate a restart and to activate the changed configuration.

Notice!

The BCL 508i responds to ping commands. A simple test to determine whether the address assignment was successful is to enter the previously configured IP address in a ping command (e.g. "ping 192.168.60.101" in a command line window under Windows).

10.3.3 Ethernet host communication

The Ethernet host communication enables the configuration of connections to an external host system. Both UDP as well as TCP/IP (in either client or server mode) can be used. The connection-free UDP protocol is used primarily to transfer process data to the host (monitor operation). The connection-oriented TCP/IP protocol can also be used to transfer commands from the host to the device. With this connection, the data is backed up by the TCP/IP protocol itself.

If you would like to use the TCP/IP protocol, you must also define whether the BCL 508*i* is to operate as a TCP client or as a TCP server.

Both protocols can be activated simultaneously and used in parallel.

↳ *Contact your network administrator to determine which communication protocol is used.*

10.3.4 TCP/IP

↳ *Activate the TCP/IP protocol*

↳ *Set the TCP/IP mode of the BCL 508i*

In **TCP client mode**, the BCL 508*i* actively establishes the connection to the primary host system (PC / PLC as server). The BCL 508*i* requires from the user the IP address of the server (host system) and the port number on which the server (host system) accepts a connection. In this case, the BCL 508*i* determines when and with whom a connection is established!

↳ *With a BCL 508i as TCP client, also set the following values:*

- IP address of the TCP server (normally the PLC/host computer)
- Port number of the TCP server
- Timeout for the wait time for an answer from the server
- Repetition time for renewed communication attempt following a timeout

In **TCP server mode**, the primary host system (PC / PLC) actively establishes the connection and the connected BCL 508*i* waits for the connection to be setup. The TCP/IP stack requires information from the user regarding the local port of the BCL 508*i* (port number) on which the connection requests of a client application (host system) are to be accepted. If there is a connection request and a connection is established by the primary host system (PC / PLC as client), the BCL 508*i* (server mode) accepts the connection. Data can then be sent and received.

↳ *With a BCL 508i as TCP server, also set the following values:*

- Port number for the communication of the BCL 508*i* with the TCP client

The corresponding adjustment options can be found:

- Via webConfig:
  `Configuration -> Communication -> Host communication`

- Or, alternatively, via the display

```
Parameter                1
  Parameter handling
  Decoder table
  Digital SWIO
o Ethernet
```

In the parameter menu, use the ▲▼ buttons to select the Ethernet menu item.

Press the enter button to enter the Ethernet menu.

```
Ethernet

  Ethernet interface
o HOST communication
```

Use the ▲▼ buttons to select the HOST communication menu item.

Press the enter button to enter the HOST communication menu.

```
HOST communication
o TcpIP
  UDP
```

Use the ▲▼ buttons to select the TcpIP menu item.

Press the enter button to enter the TcpIP menu.

```
TcpIP
o Activated
  Mode
  TcpIP client
  TcpIP server
```

Use the ▲▼ buttons to successively select the Activated, Mode and TcpIP Client or TcpIP Server menu items and set the desired values.

10.3.5 UDP

The BCL 508*i* requires from the user the IP address and the port number of the communication partner. Correspondingly, the host system (PC / PLC) now also requires the set IP address of the BCL 508*i* and the selected port number. By assigning these parameters, a socket is formed via which the data can be sent and received.

↳ *Activate the UDP protocol*

↳ *Also set the following values:*

- IP address of the communication partner
- Port number of the communication partner

The corresponding adjustment options can be found:

- Via webConfig:
  `Configuration -> Communication -> Host communication`
- Or, alternatively, via the display

```
Parameter                1
  Parameter handling
  Decoder table
  Digital SWIO
o Ethernet
```

In the parameter menu, use the ▲▼ buttons to select the `Ethernet` menu item.

Press the enter button to enter the `Ethernet` menu.

```
Ethernet

  Ethernet interface
o HOST communication
```

Use the ▲▼ buttons to select the `HOST communication` menu item.

Press the enter button to enter the `HOST communication` menu.

```
HOST communication
  TcpIP
o UDP
```

Use the ▲▼ buttons to select the `UDP` menu item.

Press the enter button to enter the `UDP` menu.

```
UDP
o Activated
  IP address
  Port number
```

Use the ▲▼ buttons to successively select the `Activated`, `IP address` and `Port number` menu items and set the desired values.

10.4 Additional settings for the BCL 508*i*

After the basic configuration of the operating mode and the communication parameters, you need to carry out further settings:

- Decoding and processing the read data
- Control of the decoding
- Control of the switching outputs

10.4.1 Decoding and processing the read data

The BCL 508*i* offers the following options:

- Setting the number of labels to be decoded for each reading gate (0 … 64). This is done via the `Max. no. of labels` parameter.
- Definition of up to 8 different code types (4 different types if configured via the display). Labels that match one of the defined code types are decoded. Further parameters can be set for each code type:
  - The code type (`symbology`)
  - The `Number of digits`: either up to 5 different numbers of digits (e.g., 10, 12, 16, 20, 24), or a range (`Interval mode`) and up to three additional numbers of digits (e.g., 2 … 10, 12, 16, 26)
  - The `Reading reliability`: the set value specifies how many times a label must be read and decoded with the same result before the result is accepted as valid.
  - Activation of the code fragment technology (`CRT`, in the webConfig tool only)
  - Additional code type specific settings (in the webConfig tool only)
  - `Check digit method` used for decoding as well as the type of `Check digit output` for the read result. The two possibilities for the latter are `Standard` (corresponds to the standard for the selected code type/symbology) and not `Standard`.

↳ *Define at least one code type with the desired settings.*

- Via webConfig:
  `Configuration -> Decoder`
- Or, alternatively, via the display
  `Parameter -> Decoder table`

Data processing via the webConfig tool

In the Data and Output submenus of the Configuration main menu, the webConfig tool provides extensive data processing options to adapt the functionality of the BCL 508*i* to the specific reading task:

- Data filtering and segmentation in the Data submenu:
  - Data filtering according to characteristics for handling identical barcode information
  - Data segmentation for differentiating between identifier and content of the read data
  - Data filtering according to content and/or identifier in order to suppress the output of barcodes with specific content/identifiers
  - Completeness inspection of the read data
- Sorting and formatting the output data in the Output submenu:
  - Configuration of up to 3 different sorting criteria. Sorting by physical data and content of the read barcodes.
  - Formatting of the data output for the HOST.
  - Formatting of the data output for the display.

10.4.2 Control of the decoding

In general, decoding is controlled via one or more of the configurable switching inputs/outputs. For this purpose, the respective connection to the SW IN/OUT and POWER interfaces must be configured as a switching input.

Via a switching input, you can:

- start decoding
- stop decoding
- start decoding and then stop decoding after a configurable time period
- read a reference code
- start the automatic code type configuration (AutoConfig)

↳ *Connect the required control devices (photoelectric sensor, proximity switch, etc.) as described in chapter 7 to the BCL 508i.*

↳ *Configure the connected switching inputs according to your requirements. To do this, first set the I/O mode to Input and then configure the switching behaviour:*

- Via webConfig:
  Configuration -> Device -> Switching inputs/outputs
- Or, alternatively, via the display
  Parameter -> Digital SWIO -> Switching input/output 1-4

Notice!

Alternatively, one can also activate decoding via the online command '+' and deactivate it via the online command '-'. Further information on the online commands can be found in chapter 11.

Advanced decoder control via the webConfig tool

The webConfig tool provides advanced functions, in particular for deactivating decoding. These may be accessed via the `Control` submenu of the `Configuration` main menu. You can:

- activate decoding automatically (delayed)
- stop decoding after a maximum reading gate time
- stop decoding via the completeness mode, if:
  - the maximum number of barcodes to be decoded has been decoded
  - a positive reference code comparison has taken place.

10.4.3 Control of the switching outputs

By using the switching inputs/outputs of the BCL 508*i*, external event-controlled functions can be implemented without assistance from the primary process control. For this purpose, the respective connection at the SW IN/OUT and POWER interfaces must be configured as a switching output.

A switching output can be activated:

- at the start/end of the reading gate
- depending on the read result:
  - reference code comparison positive/negative
  - read result valid/invalid
- depending on the state of the device:
  - ready/not ready
  - data transmission active/not active
  - active/standby
  - error/no error
- etc.

↳ *As described in chapter 7 of the manual, connect the required switching outputs of the .*

↳ *Configure the connected switching outputs according to your requirements. To do this, first set the I/O mode to Output and then configure the switching behaviour:*

- Via webConfig:
  `Configuration -> Device -> Switching inputs/outputs`
- Or, alternatively, via the display
  `Parameter -> Digital SWIO -> Switching input/output 1-4`

10.5 Transmitting configuration data

Instead of going through the tedious task of configuring every parameter of the BCL 508*i* individually, you can also conveniently transfer configuration data.

In general, there are two possibilities for transferring configuration data between two BCL 508*i* barcode readers:

- Storage in a file and transfer using the webConfig tool
- Using the external parameter memory

10.5.1 Via the webConfig tool

With the webConfig tool, you can store entire configurations of the BCL 508*i* on data carriers and transfer them from these to the BCL 508*i*.

This storage of configuration data is especially useful if you want to store basic configurations which will require only minor changes.

In the webConfig tool, you store the configuration data via the buttons in the upper part of the middle window of all submenus of the Configuration main menu.

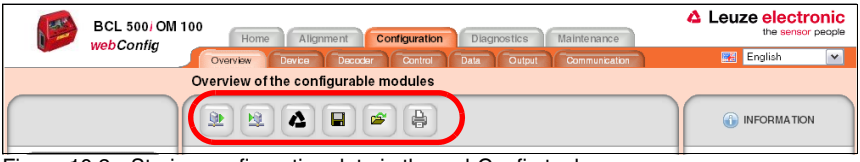

Figure 10.2: Storing configuration data in the webConfig tool

10.5.2 With the external parameter memory

The use of the external parameter memory permits the easy replacement of a defective BCL 508*i* on site.

This requires an external parameter memory to be installed permanently to the USB connection of the BCL 508*i*.

The BCL 508*i* stores a copy of the current configuration in the external parameter memory. This copy is immediately updated when the configuration is changed via the display or by a primary host system (PC/PLC) via online commands.

Installing the external parameter memory

Figure 10.3: Installing the external parameter memory

- *Remove the cover of the USB connection on the BCL 508i.*
- *Unscrew the lid of the tube with the three red rings.*
- *Screw the tube onto the USB connection of the BCL 508i.*
- *Insert the USB memory stick into the USB connection and then cover the tube with the screw cap to ensure protection class IP 65.*

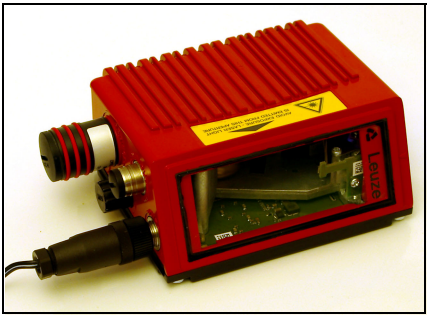

Figure 10.4: BCL 508*i* with installed parameter memory

The USB memory stick can be inserted regardless of whether or not the BCL 508*i* is connected to supply voltage.

```
Memory stick connected:
Export internal
configuration?
   OK
   cancel.
```

After the USB memory stick has been inserted and supply voltage applied, the message on the left appears on the display.

- *Use the arrow keys ▲▼ to select OK and then press the enter button ↵.*

The configuration is now transferred to the external parameter memory and is from now on updated immediately when the configuration is changed via display or online commands.

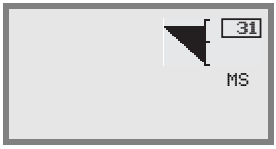

The display of MS under the device address indicates that the USB memory stick is connected correctly and is functioning.

Replacing a defective BCL 508i

- *Uninstall the defective BCL 508i.*
- *Remove the external parameter memory from the defective BCL 508i by unscrewing the tube with the three red rings.*
- *Mount the external parameter memory onto the new BCL 508i.*
- *Install and commission the new BCL 508i.*

The following message appears on the display again:

```
Memory stick connected:
Export internal
configuration?
   OK
   cancel.
```

- *Use the arrow keys ▲▼ to select Cancel and then press the enter button ↵.*

Attention!

Make sure you select Cancel. Otherwise, the configuration in the external parameter memory is lost!

The configuration is now imported from the external parameter memory and the BCL 508*i* is immediately operational without any further configuration.

11 Online commands

11.1 Overview of commands and parameters

Online commands can be used to send commands directly to the device for control and configuration.

For this purpose, the BCL 508*i* must be connected to a host- or service computer via the serial interface. The commands described can be sent either via the host or the service interface.

Online commands

With the commands, you can:

- control/decode.
- read/write/copy parameters.
- carry out an automatic configuration.
- teach-in/set reference codes.
- call up error messages.
- call up statistical device information.
- carry out a software reset in order to reinitialise the device.

Syntax

"Online" commands consist of one or two ASCII characters followed by command parameters.

No separation characters may be entered between the command and the command parameter(s). Both small and capitalised letters can be used.

Example:

Command **'CA'**: autoConfig function

Parameter **'+'**: Activation

Transmitted is: **'CA+'**

Notation

Commands, command parameters and returned data are enclosed between single quotation marks ' ' in the text of this manual.

Most online commands are acknowledged by the BCL 508*i* and any requested data returned. For commands that are not acknowledged, command execution can be observed or monitored directly on the device.

11.1.1 General 'online' commands

Software version number

Command	'V'
Description	Requests device version information
Parameter	no
Acknowledge-ment	**'BCL 500i SM 100 V 1.3.8 2008-02-15'** The first line contains the device type of the BCL 508*i*, followed by the device version number and version date. (The data which is actually displayed may vary from the values given here.)

Notice!

This command returns the major release number of the software packet. This major release number also appears on the display during start-up.
This command can be used to check whether the connected host or service computer is properly connected and configured. If you do not receive an acknowledgement, please check interface connections, protocol and service switches.

Software reset

Command	'H'
Description	Carries out a software reset. The device is restarted and reinitialised, leaving it in the same state as when the supply voltage is switched on.
Parameter	no
Acknowledge-ment	**'S'** (start signal)

Code recognition

Command	**'CC'**
Description	Detects an unknown bar code and outputs number of digits, code type, and code information to the interface, without storing the barcode in the parameter memory.
Parameter	no
Acknowledge-ment	**'xx yy zzzzzz'** **xx**: No. of digits of the read code **yy**: Code type of the read code **'01'** 2/5 Interleaved **'02'** Code 39 **'06'** UPC (A, E) **'07'** EAN **'08'** Code 128, EAN 128 **'10'** EAN/UPC **'11'** Codabar **zzzzzz**: Contents of the decoded label. A ↑ appears if the label was not correctly read.

autoConfig

Command	'CA'
Description	Activates or deactivates the 'autoConfig' function. BCL 508*i*Certain label reading parameters are programmed automatically in the setup by the labels which are read while the 'autoConfig' function is active.
Parameter	**'+'** Activates 'autoConfig' **'/'** Rejects the last code read **'-'** Deactivates 'autoConfig' and stores the decoded data in the current parameter set.
Acknowledge-ment	**'CSx'** **x** Status **'0'** Valid **'CA'** command **'1'** Invalid command **'2'** autoConfig could not be activated **'3'** autoConfig could not be deactivated **'4'** Result could not be deleted
Description	**'xx yy zzzzzz'** **xx** No. of digits of the read code **yy** Code type of the read code **'01'** 2/5 Interleaved **'02'** Code 39 **'06'** UPC (A, E) **'07'** EAN **'08'** Code 128, EAN 128 **'10'** EAN/UPC **'11'** Codabar **zzzzzz**: Contents of the decoded label. A ↑ appears if the label was not correctly read.

Alignment mode

Command	’JP’
Description	This command simplifies mounting and alignment of the BCL 508*i*. After activating the function with **’JP+’**, the BCL 508*i* continuously supplies status information to the serial interfaces. With this online command, the scanner is set to terminate the decoding after 100 successfully decoded labels and output the status information. Subsequently, the read process is reactivated automatically. In addition to the output of the status information, the laser beam is used to display the reading quality. Depending on how many read results could be extracted, the duration of the laser's "off" time increases. If the reading quality is high, the laser beam flashes in brief, regular intervals. The worse the decoder decodes, the longer the pauses become during which the laser is switched off. The flashing intervals become more and more irregular because the laser may, in total, be active for longer to extract more labels. The duration of the pauses has been stepped in such a way that they can be distinguished by the eye.
Parameter	**’+’**: Starts the adjustment mode. **’-’**: Ends the adjustment mode.
Acknowledgement	**’yyy_zzzzzz’** **yyy**: Reading quality in %. A high process availability is ensured at read qualities > 75%. **zzzzzz**: Barcode information.

Manual definition of the reference code

Command	RS
Description	This command can be used to define a new reference code in the BCL 500*i* by means of direct input via the serial interface. The data is saved in the parameter set according to your input under reference code 1 through 2 and stored in the working buffer for direct further processing.
Parameter	**'RSyvxxzzzzzzzz'** **y**, **v, x** and **z** are placeholders (variables) for the actual input. **y** Defined reference code no. **'1'** (Code 1) **'2'** (Code 2) **v** Storage location for reference code: **'0'** RAM+EEPROM, **'3'** RAM only **xx** Defined code type (see command 'CA') **z** Defined code information (1 … 63 characters)
Acknowledge-ment	**'RSx'** **x** Status **'0'** Valid '**Rx**' command **'1'** Invalid command **'2'** Insufficient memory for reference code **'3'** Reference code has not been saved **'4'** Reference code invalid
Example	Input = 'RS130678654331' (Code 1 (1), RAM only (3), UPC (06), code information)

Reference-code teach-in

Command	'RT'
Description	This command enables a reference code to be defined quickly by reading an example label.
Parameter	**'RTy'** **y** Function **'1'** Defines reference code 1 **'2'** Defines reference code 2 **'+'** Activates the definition of reference code 1 up to the value of Parameter no_of_labels **'-'** Exits the Teach-In process
Acknowledge-ment	The BCL 508*i* first responds with the command **'RS'** and corresponding status (see command 'RS'). After a barcode has been read, it sends the result in the following format: **'RCyvxxzzzzz'** **y**, **v, x** and **z** are placeholders (variables) for the actual input. **y** Defined reference code no. **'1'** (Code 1) **'2'** (Code 2) **v** Memory location for reference code **'0'** RAM+EEPROM, **'3'** RAM only **xx** Defined code type (see command 'CA') **z** Defined code information (1 … 63 characters)

Notice!

With this function, only code types are recognised that are identified using the autoConfig function or which were set in the set-up.

➪ *After each reading via an 'RTy' command, explicitly switch off the function again since failure to do so will interfere with other commands as well as prevent execution of a new 'RTx' command.*

Reading a reference code

Command	’RR’
Description	The command reads out the reference code defined in the BCL 508*i*. If no parameters are specified, all defined codes are output.
Parameter	<Reference code number> **’1’ … ’2’** value range of reference codes 1 to 2
Acknowledge-ment	If no reference codes are defined, the BCL 508*i* responds with the **’RS’** command and corresponding status (see command ’RS’)**.** For valid codes, the output corresponds to the following format: **RCyvxxzzzzzz** **y**, **v, x** and **z** are placeholders (variables) for the actual input. **y** Defined reference code no. **’1’** (Code 1) **’2’** (Code 2) **v** Memory location for reference code **’0’** RAM+EEPROM, **’3’** RAM only **xx** Defined code type (see command ’CA’) **z** Defined code information (1 … 63 characters)

11.1.2 ’Online’ commands for system control

Activating sensor input

Command	’+’
Description	The command activates decoding. This command is used to activate the reading gate. It remains active until it is deactivated by one of the following criteria: • Deactivation by a manual command • Deactivation by a switching input • Deactivation upon reaching the specified read quality (equal scans) • Deactivation by timeout • Deactivation upon reaching a preset number of scans without information.
Parameter	no
Acknowledge-ment	no

Deactivating sensor input

Command	’-’
Description	The command deactivates decoding. This command can be used to deactivate the reading gate. Following deactivation, the read result is output. Because the reading gate was manually deactivated and, thus, no GoodRead criterion was met, a NoRead is output.
Parameter	no
Acknowledge-ment	no

11.1.3 ’Online’ commands for the parameter set operations

Copying parameter set

Command	’PC’
Description	This command can only be used to copy parameter sets in their entirety. This can be used to replicate the three parameter sets **default**, **permanent** and **operating parameters** on the basis of one another. In addition, this command can also be used to restore the factory settings.
Parameter	**’PC<Source type><Target type>’** **<Source type>**Parameter data set which is to be copied, unit [dimensionless] **'0'** Parameter data set in permanent memory **'2'** Default or factory parameter set **'3'** Operating parameter data set in volatile memory **<Target type>**Parameter set to which the data is to be copied, unit [dimensionless] **'0'** Parameter data set in permanent memory **'3'** Operating parameter data set in volatile memory Permissible combinations here include: **'03'** Copying the data set from the permanent memory to the operating parameter data set **'30'** Copying the operating parameter data set to the permanent parameter set memory **'20'** Copying the default parameters to the permanent memory and to the main memory
Acknowledgement	**’PS=<aa>’** **<aa>** Status acknowledgement, unit [dimensionless] **’00’** Ok **’01’** Syntax error **’02’** Impermissible command length **’03’** Reserved **’04’** Reserved **’05’** Reserved **’06’** Impermissible combination, source type - target type

Requesting parameter data set from BCL 508i

Command	’PR’
Description	The parameters of the BCL 508*i* are grouped together in a parameter set and permanently stored in memory. There is one parameter set in permanent memory and one operating parameter set in volatile memory; in addition, there is a default parameter set (factory parameter set) for initialisation. This command can be used to edit the first two parameter sets (in permanent and volatile memory). A check sum can be used for reliable parameter transfer.
Parameter	**’PR<BCC type><PS type><Address><Data length>[<BCC>]’** **<BCC type>** Check-digit function during transfer, unit [dimensionless] **’0’** Not used **’3’** BCC mode 3 **<PS type>** Memory from which the values are to be read, unit [dimensionless] **’0’** Parameter values stored in the flash memory **’1’** Reserved **’2’** Default values **’3’** Operating values in RAM **<Address>** Relative address of the data within the data set **’aaaa’** Four-digit, unit [dimensionless] **<Data length>** Length of the parameter data to be transferred **’bbbb’** Four-digit, unit [length in bytes] **<BCC>** Check sum calculated as specified under BCC type

Command	'PR'
Acknowledge-ment positive	**PT<BCC type><PS type><Status><Start> <Address parameter value><Address+1 parameter value>… [;<Address><Address parameter value>][<BCC>]** **<BCC type>**Check-digit function during transfer, unit [dimensionless] **'0'** Not used **'3'** BCC mode 3 **<PS type>** Memory from which the values are to be read, unit [dimensionless] **'0'** Parameter values stored in the flash memory **'2'** Default values **'3'** Operating values in RAM **<Status>** Mode of parameter processing, unit [dimensionless] **'0'** No further parameters **'1'** Additional parameters follow **<Start>** Relative address of the data within the data set, **'aaaa'** Four-digit, unit [dimensionless] **<P.value A.>**Parameter value of the parameter stored at this address; the parameter set data **'bb'** is converted from HEX format to a 2-byte ASCII-format for transfer. **<BCC>** Check sum calculated as specified under BCC type
Acknowledge-ment negative	**'PS=<aa>'** Parameter reply: **<aa>** Status acknowledgement, unit [dimensionless] **'01'** Syntax error **'02'** Impermissible command length **'03'** Impermissible value for check-sum type **'04'** Invalid check sum received **'05'** Impermissible number of data requested **'06'** Requested data does not (any longer) fit in the transmission buffer **'07'** Impermissible address value **'08'** Read access after end of data set **'09'** Impermissible QPF data set type

Determining parameter set difference to default parameters

Command	’PD’
Description	This command outputs the difference between the default parameter set and the operating parameter set or the difference between the default parameter set and the permanent parameter set. **Comment**: The reply supplied by this command can e.g. be directly used for programming a device with factory settings, whereby this device receives the same configuration as the device on which the PD-sequence was executed.
Parameter	**’PD<P.set1><P.set2>’** **<P.set1>** Parameter data set which is to be copied, unit [dimensionless] **’0’** Parameter data set in permanent memory **’2’** Default or factory parameter set **<P.set2>** Parameter set to which the data is to be copied, unit [dimensionless] **’0’** Parameter data set in permanent memory **’3’** Operating parameter data set in volatile memory Permissible combinations here include: **’20’** Output of the parameter differences between the default and the permanently saved parameter set **’23’** Output of the parameter differences between the default parameter set and the operating parameter set saved in volatile memory **’03’** Output of the parameter differences between the permanent parameter set and the operating parameter set saved in volatile memory
Acknowledgement positive	**PT<BCC><PS type><Status><Adr.><P.value adr.><P.valueAdr.+1>…** **[;<Adr.><P.value adr.>]** **<BCC>** **’0’** No check digit **’3’** BCC mode 3 **<PS type>** **’0’** Values stored in flash memory **’3’** Operating values stored in RAM **<Status>** **’0’** No further parameters **’1’** Additional parameters follow **<Adr.>** Relative address of the data within the data set **’aaaa’** Four-digit, unit [dimensionless] **<P.value>** Parameter value of the -bb- parameter stored at this address. The parameter set data is converted from HEX format to a 2-byte-ASCII format for transfer.

Command	’PD’
Acknowledge-ment negative	**’PS=<aa>’** **<aa>** Status acknowledgement, unit [dimensionless] **’0’** No difference **’1’** Syntax error **’2’** Impermissible command length **’6’** Impermissible combination, parameter set 1 and parameter set 2 **’8’** Invalid parameter set

Writing parameter set

Command	'PT'
Description	The parameters of the BCL 508*i* are grouped together in a parameter set and permanently stored in memory. There is one parameter set in permanent memory and one operating parameter set in volatile memory; in addition, there is a default parameter set (factory parameter set) for initialisation. This command can be used to edit the first two parameter sets (in permanent and volatile memory). A check sum can be used for reliable parameter transfer.
Parameter	**PT<BCC type><PS type><Status><Adr.><P.value adr.> <P.value adr+1>…[;<Adr.><P.value adr.>][<BCC>]** **<BCC type>** Check-digit function during transfer, unit [dimensionless] **'0'** No check digit **'3'** BCC mode 3 **<PS type>** Memory from which the values are to be read, unit [dimensionless] **'0'** Parameter values stored in the flash memory **'3'** Operating values stored in RAM **<Status>** Mode of parameter processing, without function here, unit [dimensionless] **'0'** No reset after parameter change, no further parameters **'1'** No reset after parameter change, additional parameters follow **'2'** With reset after parameter change, no further parameters **'6'** Set parameters to factory setting, no further parameters **'7'** Set parameters to factory settings, lock all code types; the code-type setting must follow in the command! **<Adr.>** Relative address of the data within the data set, **'aaaa'** Four-digit, unit [dimensionless] **<P.value>** Parameter value of the -bb- parameter stored at this address. The parameter set data is converted from HEX format to a 2-byte-ASCII format for transfer. **<BCC>** Check sum calculated as specified under BCC type

Command	’PT’
Acknowledge-ment	**’PS=<aa>’** Parameter reply: **<aa>** Status acknowledgement, unit [dimensionless] **’01’** Syntax error **’02’** Impermissible command length **’03’** Impermissible value for check-sum type **’04’** Invalid check sum received **’05’** Impermissible data length **’06’** Invalid data (parameter limits violated) **’07’** Invalid start address **’08’** Invalid parameter set **’09’** Invalid parameter set type

12 Diagnostics and troubleshooting

12.1 General causes of errors

Error	Possible error cause	Measures
Status LED **PWR**		
Off	• No supply voltage connected to the device • Hardware error	❑ Check supply voltage ❑ Send device to customer service
Red, flashing	• Warning	❑ Query diagnostic data and carry out the resulting measures
Red, continuous light	• Error: no function possible	❑ Internal device error, send in device
Orange, continuous light	• Device in service mode	❑ Reset service mode with webConfig tool or display
Status LED **BUS**		
Off	• No supply voltage connected to the device • Hardware error	❑ Check supply voltage ❑ Send device to customer service
Red, flashing	• Communication error	❑ Check interface
Red, continuous light	• No communication	❑ Check interface

Table 12.1: General causes of errors

12.2 Interface errors

Error	Possible error cause	Measures
No communication via USB service interface	• Incorrect connection cable • Connected BCL 508*i* is not detected	❑ Check connection cable ❑ Install USB driver
No communication via Ethernet interface	• Incorrect wiring. • Different protocol settings • Protocol not released	❑ Check wiring ❑ Check protocol settings ❑ Activate TCP/ IP or UDP
Sporadic errors at the Ethernet interface	• Incorrect wiring. • Effects due to EMC. • Overall network expansion exceeded.	❑ Check wiring • In particular, check wire shielding • Check the cable used ❑ Check shielding (shield covering in place up to the clamping point) ❑ Check grounding concept and connection to functional earth (FE) ❑ Avoid EMC coupling caused by power cables laid parallel to device lines. ❑ Check max. network expansion as a function of the max. cable lengths.

Table 12.2: Interface error

Notice!

*Please use **chapter 12 as a master copy** should servicing be required.*
Cross the items in the "Measures" column which you have already examined, fill out the following address field and fax the pages together with your service contract to the fax number listed below.

Customer data (please complete)

Device type:	
Company:	
Contact partner / department:	
Phone (direct):	
Fax:	
Street / No:	
ZIP code/City:	
Country:	

Leuze Service fax number:

+49 7021 573 - 199

13 Type overview and accessories

13.1 Type key

BCL 500i OM100H

Heating option	H =	With heating
Beam exit	0	Lateral
	2	Front
Optics	N	High Density (near)
	M	Medium Density (medium distance)
	F	Low Density (remote)
	L	Ultra Low Density (very large distances)
Scanning principle	S	Line scanner (single line)
	O	Oscillating-mirror scanner
	i =	Integrated fieldbus technology
Interface	0	RS 232/RS 422/RS 485 (multiNet Master)
	1	RS 485 (multiNet Slave)
	4	PROFIBUS DP
	8	ETHERNET / PROFINET
	BCL	Barcode reader

13.2 Type overview BCL 508*i*

BCL 508i family

(PROFINET / 2x Ethernet on 2x M12 D-coded)

Type designation	Description	Part No.
High Density Optics (m = 0.25 … 0.5mm)		
BCL 508*i* SN 100	Line scanner with deflection mirror	501 05507
BCL 508*i* SN 102	Line scanner, beam exit at the front	501 05508
BCL 508*i* ON 100	Oscillating-mirror scanner	501 05509
BCL 508*i* SN 100 H	Line scanner with deflection mirror, with heating	501 05510
BCL 508*i* SN 102 H	Line scanner, beam exit at the front, with heating	501 05511
BCL 508*i* ON 100 H	Oscillating-mirror scanner with heating	501 05512
Medium Density Optics (m = 0.35 … 1.0mm)		
BCL 508*i* SM 100	Line scanner with deflection mirror	501 05513
BCL 508*i* SM 102	Line scanner, beam exit at the front	501 05514
BCL 508*i* OM 100	Oscillating-mirror scanner	501 05515
BCL 508*i* SM 100 H	Line scanner with deflection mirror, with heating	501 05516
BCL 508*i* SM 102 H	Line scanner, beam exit at the front, with heating	501 05517
BCL 508*i* OM 100 H	Oscillating-mirror scanner with heating	501 05518

Table 13.1: Type overview BCL 508*i*

Type designation	Description	Part No.
Low Density Optics (m = 0.5 … 1.0mm)		
BCL 508*i* SF 100	Line scanner with deflection mirror	501 05519
BCL 508*i* SF 102	Line scanner, beam exit at the front	501 05520
BCL 508*i* OF 100	Oscillating-mirror scanner	501 05521
BCL 508*i* SF 100 H	Line scanner with deflection mirror, with heating	501 05522
BCL 508*i* SF 102 H	Line scanner, beam exit at the front, with heating	501 05523
BCL 508*i* OF 100 H	Oscillating-mirror scanner with heating	501 05524
Ultra Low Density Optics (m = 0.7 … 1.0mm)		
BCL 508*i* SL 102	Line scanner, beam exit at the front	501 09905
BCL 508*i* OL 100	Oscillating-mirror scanner	501 09906
BCL 508*i* SL 102 H	Line scanner, beam exit at the front, with heating	501 09908
BCL 508*i* OL 100 H	Oscillating-mirror scanner with heating	501 09909

Table 13.1: Type overview BCL 508*i*

13.3 Accessory connectors

Type designation	Description	Part No.
KD 095-5A	M12 socket for voltage supply	50020501
KS 095-4A	M12 connector for SW IN/OUT	50040155
D-ET1	RJ45 connector for user-configuration	50108991
KDS ET M12 / RJ 45 W - 4P	Converter from M12 D-coded to RJ 45 socket	50109832

Table 13.2: Connectors for the BCL 508*i*

13.4 Accessory USB cable

Type designation	Description	Part No.
KB USB-Service	USB service cable	50107726

Table 13.3: Cables for the BCL 508*i*

13.5 Accessory external parameter memory

Type designation	Description	Part No.
USB Memory Set	External USB parameter memory	50108833

Table 13.4: External parameter memory for the BCL 508*i*

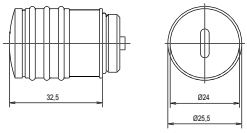

13.6 Accessory mounting device

Type designation	Description	Part No.
BT 56	Mounting device for rod	50027375

Table 13.5: Mounting devices for the BCL 508*i*

13.7 Accessory ready-made cables for voltage supply

13.7.1 Contact assignment of PWR connection cable

PWR connection cable (5-pin socket, A-coded)			
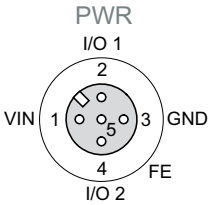 **M12 socket (A-coded)**	**Pin**	**Name**	**Core colour**
	1	VIN	**brown**
	2	I/O 1	**white**
	3	GND	**blue**
	4	I/O 2	**black**
	5	FE	**grey**
	Thread	FE	**bare**

13.7.2 Specifications of the cables for voltage supply

Operating temperature range	in rest state:	-30°C … +70°C
	in motion:	-5°C … +70°C
Material	sheathing: PVC	
Bending radius	> 50mm	

13.7.3 Order codes of the cables for voltage supply

Type designation	Description	Part No.
K-D M12A-5P-5m-PVC	M12 socket for PWR, axial connector, open line end, cable length 5m	50104557
K-D M12A-5P-10m-PVC	M12 socket for PWR, axial connector, open line end, cable length 10m	50104559

Table 13.6: PWR cables for the BCL 508*i*

13.8 Accessory ready-made cables for bus connection

13.8.1 General information

- Cable **KB ET…** for connecting to Industrial Ethernet via M12 connector
- Standard cables available in lengths from 2 … 30m
- Special cables on request.

13.8.2 Contact assignments M12 Ethernet connection cables KB ET…

M12 Ethernet connection cable (4-pin connector, D-coded, on both sides)			
Ethernet 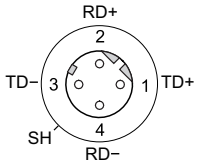 **M12 plug (D-coded)**	**Pin**	**Name**	**Core colour**
	1	TD+	**yellow**
	2	RD+	**white**
	3	TD-	**orange**
	4	RD-	**blue**
	SH (thread)	FE	**bare**

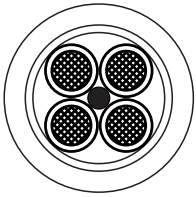

Wire colours

WH
YE
BU
OG

Conductor class: VDE 0295, EN 60228, IEC 60228 (Class 5)

Figure 13.7:Cable structure of Industrial Ethernet connection cable

13.8.3 Technical data of the M12 Ethernet connection cables KB ET…

Operating temperature range	in rest state: -50°C … +80°C in motion: -25°C … +80°C in motion: -25°C … +60°C (when used with drag chains)
Material	Cable sheath: PUR (green), wire insulation: PE foam, free of halogens, silicone and PVC
Bending radius	> 65mm, suitable for drag chains
Bending cycles	> 10^6, perm. acceleration < 5m/s^2

13.8.4 Order codes for M12 Ethernet connection cables KB ET…

Type designation	Description	Part No.
M12 plug for BUS IN, axial connector, open line end		
KB ET - 1000 - SA	Cable length 1 m	50106738
KB ET - 2000 - SA	Cable length 2 m	50106739
KB ET - 5000 - SA	Cable length 5 m	50106740
KB ET - 10000 - SA	Cable length 10 m	50106741
KB ET - 15000 - SA	Cable length 15 m	50106742
KB ET - 20000 - SA	Cable length 20 m	50106743
KB ET - 25000 - SA	Cable length 25 m	50106745
KB ET - 30000 - SA	Cable length 30 m	50106746
M12 plug for BUS IN to RJ-45 connector		
KB ET - 1000 - SA-RJ45	Cable length 1 m	50109879
KB ET - 2000 - SA-RJ45	Cable length 2 m	50109880
KB ET - 5000 - SA-RJ45	Cable length 5 m	50109881
KB ET - 10000 - SA-RJ45	Cable length 10 m	50109882
KB ET - 15000 - SA-RJ45	Cable length 15 m	50109883
KB ET - 20000 - SA-RJ45	Cable length 20 m	50109884
KB ET - 25000 - SA-RJ45	Cable length 25 m	50109885
KB ET - 30000 - SA-RJ45	Cable length 30 m	50109886
M12 plug + M12 plug for BUS OUT to BUS IN		
KB ET - 1000 - SSA	Cable length 1 m	50106898
KB ET - 2000 - SSA	Cable length 2 m	50106899
KB ET - 5000 - SSA	Cable length 5 m	50106900
KB ET - 10000 - SSA	Cable length 10 m	50106901
KB ET - 15000 - SSA	Cable length 15 m	50106902
KB ET - 20000 - SSA	Cable length 20 m	50106903
KB ET - 25000 - SSA	Cable length 25 m	50106904
KB ET - 30000 - SSA	Cable length 30 m	50106905

Table 13.8: Bus connection cables for the BCL 508*i*

14 Maintenance

14.1 General maintenance information

Usually, the barcode reader BCL 508*i* does not require any maintenance by the operator.

Cleaning

In the event of dust build-up, clean the BCL 508*i* with a soft cloth; use a cleaning agent (commercially available glass cleaner) if necessary.

Notice!

Do not use aggressive cleaning agents such as thinner or acetone for cleaning the device. Use of improper cleaning agents can damage the optical window.

14.2 Repairs, servicing

Repairs to the device must only be carried out by the manufacturer.

↳ *Contact your Leuze distributor or service organisation should repairs be required. The addresses can be found on the inside of the cover and on the back.*

Notice!

When sending devices to Leuze electronic for repair, please provide an accurate description of the error.

14.3 Disassembling, packing, disposing

Repacking

For later re-use, the device is to be packed so that it is protected.

Notice!

Electrical scrap is a special waste product! Observe the locally applicable regulations regarding disposal of the product.

15 Appendix

15.1 Declaration of conformity

Leuze electronic

EG-Konformitätserklärung
EC-Declaration of Conformity

Der Hersteller:
The Manufacturer:

Leuze electronic GmbH + Co. KG
In der Braike 1
73277 Owen / Teck
Deutschland

erklärt, unter alleiniger Verantwortung, dass die folgenden Produkte:
declares under its sole responsibility, that the following products:

Gerätebeschreibung:
Description of Product:

BCL 50x* Barcodeleser / *Barcode Reader*

folgenden Richtlinien und Normen entsprechen.
are in conformity with the following standards and directives.

Angewandte EG-Richtlinie(n):
Applied EC-Directive(s):

89/336/EWG EMV-Richtlinie / *EMC Directive*

Angewandte harmonisierte Normen:
Applied harmonized standards:

EN 61000-6-2:2005 EMV Fachgrundnormen Störfestigkeit Industrie
Immunity standard for industrial environments

EN 61000-6-4:2001 EMV Fachgrundnorm Störaussendung Industrie
Emission standard for industrial environments

Sonstige angewandte Normen:
Other applied standards:

EN 60825-1:1994 + A1:2002 + A2:2001 Sicherheit von Lasereinrichtungen
Safety of laser products

Leuze electronic GmbH + Co. KG
Postfach 11 11
In der Braike 1
73277 Owen / Teck
Deutschland

Owen, den 14.6.07

Michael Heyne (Geschäftsführer)
(*Managing Director*)

Leuze electronic GmbH + Co. KG
In der Braike 1
D-73277 Owen / Teck
Telefon (0 70 21) 57-0
Telefax (0 70 21) 57-39 59
http://www.leuze.de
info@leuze.de

Die Gesellschaft ist eine Kommanditgesellschaft mit Sitz in Owen
Registergericht Stuttgart, HRA 230712
Persönlich haftende Gesellschafterin ist die
Leuze electronic Geschäftsführungs-GmbH mit Sitz in Owen
Registergericht Stuttgart, HRB 230706
Geschäftsführer: Michael Heyne (Sprecher), Dr. Harald Grubel

BW -Bank Nürtingen 8665210 (BLZ 600 501 01)
Volksbank Kirchheim-Nürtingen 310 800 005 (BLZ 612 901 20)
Kreissparkasse Esslingen-Nürtingen 10 399 220 (BLZ 611 500 20)

Steuer-Nr. 69026 / 10630
USt.-IdNr. DE 145912531
Zollnummer 2504232

15.2 ASCII character set

ASCII	Dec.	Hex.	Oct.	Designation	Meaning
NUL	0	00	0	NULL	Null
SOH	1	01	1	START OF HEADING	Start of heading
STX	2	02	2	START OF TEXT	Start of text characters
ETX	3	03	3	END OF TEXT	Last character of text
EOT	4	04	4	END OF TRANSMISS.	End of transmission
ENQ	5	05	5	ENQUIRY	Request for data trans.
ACK	6	06	6	ACKNOWLEDGE	Positive acknowledgement
BEL	7	07	7	BELL	Bell signal
BS	8	08	10	BACKSPACE	Backspace
HT	9	09	11	HORIZ. TABULATOR	Horizontal tabulator
LF	10	0A	12	LINE FEED	Line feed
VT	11	0B	13	VERT. TABULATOR	Vertical tabulator
FF	12	0C	14	FORM FEED	Form feed
CR	13	0D	15	CARRIAGE RETURN	Carriage return
SO	14	0E	16	SHIFT OUT	Shift out
SI	15	0F	17	SHIFT IN	Shift in
DLE	16	10	20	DATA LINK ESCAPE	Data link escape
DC1	17	11	21	DEVICE CONTROL 1	Device control character 1
DC2	18	12	22	DEVICE CONTROL 2	Device control character 2
DC3	19	13	23	DEVICE CONTROL 3	Device control character 3
DC4	20	14	24	DEVICE CONTROL 4	Device control character 4
NAK	21	15	25	NEG. ACKNOWLEDGE	Negative acknowledge
SYN	22	16	26	SYNCRONOUS IDLE	Synchronization
ETB	23	17	27	EOF TRANSM. BLOCK	End of data transmission block
CAN	24	18	30	CANCEL	Invalid
EM	25	19	31	END OF MEDIUM	End of medium
SUB	26	1A	32	SUBSTITUTE	Substitution
ESC	27	1B	33	ESCAPE	Escape
FS	28	1C	34	FILE SEPARATOR	File separator
GS	29	1D	35	GROUP SEPARATOR	Group separator
RS	30	1E	36	RECORD SEPARATOR	Record separator
US	31	1F	37	UNIT SEPARATOR	Unit separator
SP	32	20	40	SPACE	Space
!	33	21	41	EXCLAMATION POINT	Exclamation point

ASCII	Dec.	Hex.	Oct.	Designation	Meaning
"	34	22	42	QUOTATION MARK	Quotation mark
#	35	23	43	NUMBER SIGN	Number sign
$	36	24	44	DOLLAR SIGN	Dollar sign
%	37	25	45	PERCENT SIGN	Percent sign
&	38	26	46	AMPERSAND	Ampersand
’	39	27	47	APOSTROPHE	Apostrophe
(	40	28	50	OPEN. PARENTHESIS	Open parenthesis
)	41	29	51	CLOS. PARENTHESIS	Closed parenthesis
*	42	2A	52	ASTERISK	Asterisk
+	43	2B	53	PLUS	Plus sign
,	44	2C	54	COMMA	Comma
-	45	2D	55	HYPHEN (MINUS)	Hyphen
.	46	2E	56	PERIOD (DECIMAL)	Period (decimal)
/	47	2F	57	SLANT	Slant
0	48	30	60	0	Number
1	49	31	61	1	Number
2	50	32	62	2	Number
3	51	33	63	3	Number
4	52	34	64	4	Number
5	53	35	65	5	Number
6	54	36	66	6	Number
7	55	37	67	7	Number
8	56	38	70	8	Number
9	57	39	71	9	Number
:	58	3A	72	COLON	Colon
;	59	3B	73	SEMI-COLON	Semi-colon
<	60	3C	74	LESS THAN	Less than
=	61	3D	75	EQUALS	Equals
>	62	3E	76	GREATER THAN	Greater than
?	63	3F	77	QUESTION MARK	Question mark
@	64	40	100	COMMERCIAL AT	Commercial AT
A	65	41	101	A	Capital letter
B	66	42	102	B	Capital letter
C	67	43	103	C	Capital letter
D	68	44	104	D	Capital letter

ASCII	Dec.	Hex.	Oct.	Designation	Meaning
E	69	45	105	E	Capital letter
F	70	46	106	F	Capital letter
G	71	47	107	G	Capital letter
H	72	48	110	H	Capital letter
I	73	49	111	I	Capital letter
J	74	4A	112	J	Capital letter
K	75	4B	113	K	Capital letter
L	76	4C	114	L	Capital letter
M	77	4D	115	M	Capital letter
N	78	4E	116	N	Capital letter
O	79	4F	117	O	Capital letter
P	80	50	120	P	Capital letter
Q	81	51	121	Q	Capital letter
R	82	52	122	R	Capital letter
S	83	53	123	S	Capital letter
T	84	54	124	T	Capital letter
U	85	55	125	U	Capital letter
V	86	56	126	V	Capital letter
W	87	57	127	W	Capital letter
X	88	58	130	X	Capital letter
Y	89	59	131	Y	Capital letter
Z	90	5A	132	Z	Capital letter
[	91	5B	133	OPENING BRACKET	Opening bracket
\	92	5C	134	REVERSE SLANT	Reverse slant
]	93	5D	135	CLOSING BRACKET	Closing bracket
^	94	5E	136	CIRCUMFLEX	Circumflex
_	95	5F	137	UNDERSCORE	Underscore
‘	96	60	140	GRAVE ACCENT	Grave accent
a	97	61	141	a	Lower case letter
b	98	62	142	b	Lower case letter
c	99	63	143	c	Lower case letter
d	100	64	144	d	Lower case letter
e	101	65	145	e	Lower case letter
f	102	66	146	f	Lower case letter
g	103	67	147	g	Lower case letter

ASCII	Dec.	Hex.	Oct.	Designation	Meaning
h	104	68	150	h	Lower case letter
i	105	69	151	i	Lower case letter
j	106	6A	152	j	Lower case letter
k	107	6B	153	k	Lower case letter
l	108	6C	154	l	Lower case letter
m	109	6D	155	m	Lower case letter
n	110	6E	156	n	Lower case letter
o	111	6F	157	o	Lower case letter
p	112	70	160	p	Lower case letter
q	113	71	161	q	Lower case letter
r	114	72	162	r	Lower case letter
s	115	73	163	s	Lower case letter
t	116	74	164	t	Lower case letter
u	117	75	165	u	Lower case letter
v	118	76	166	v	Lower case letter
w	119	77	167	w	Lower case letter
x	120	78	170	x	Lower case letter
y	121	79	171	y	Lower case letter
z	122	7A	172	z	Lower case letter
{	123	7B	173	OPENING BRACE	Opening brace
|	124	7C	174	VERTICAL LINE	Vertical line
}	125	7D	175	CLOSING BRACE	Closing brace
~	126	7E	176	TILDE	Tilde
DEL	127	7F	177	DELETE (RUBOUT)	Delete

15.3 Barcode samples

15.3.1 Module 0.3

Code type 01: Interleaved 2 of 5

Modul 0,3

1122334455

Code type 02: Code 39

Modul 0,3

135AC

Code type 11: Codabar

Modul 0,3

A1213 14A

Code 128

Modul 0,3

abcde

Code type 08: EAN 128

Modul 0,3

leuze

Code type 06: UPC-A

SC 2

1 23456 78901 2

Code type 07: EAN 8

SC 3

3456 7890

Code type 10: EAN 13 Add-on

SC 0 S

77889

1 122334 455666

Figure 15.1:Barcode sample labels (module 0.3)

15.3.2 Module 0.5

Code type 01: Interleaved 2 of 5

Modul 0,5

6677889900

Code type 02: Code 39

Modul 0,5

246BD

Code type 11: Codabar

Modul 0,5

A1511617A

Code 128

Modul 0,5

fghij

Code type 08: EAN 128

Modul 0,5

LEUZE

Code type 06: UPC-A

SC 4

0 98765 43219 8

Code type 07: EAN 8

SC 6

9876 5430

Code type 10: EAN 13 Add-on

SC 2

0 099887 766550 44332

Figure 15.2:Barcode sample labels (module 0.5)

Level 1 ▲▼ : selection	Level 2 ▲▼ : selection ESC : back	Level 3 ▲▼ : selection ESC : back	Level 4 ▲▼ : selection ESC : back	Level 5 ▲▼ : selection ESC : back	Selection/configuration option ▲▼ : selection ↵ : activate ESC : back	Detailed information on
Device information						page 86
Barcode window						page 82
Parameter ↵	Parameter handling ↵	Parameter enabling ↵			OFF/ON	page 87
		Parameters to default ↵			All parameters are reset to their factory settings	
	Decoder table ↵	Max. no. of labels ↵			Sets the number of labels to be decoded (0 … 64)	page 88
		Decoder 1-4 ↵	Symbology ↵		Code type: no code / Code 2 of 5 Interleaved / Code 39 / Code 32 / Code UPC / Code EAN / Code 128 / EAN Addendum / Codabar / Code 93 / RSS 14 / RSS Limited / RSS Expanded	
			Number of digits ↵	Interval mode ↵	OFF / ON to specify a range of permitted numbers of digits	
				Digits 1-5 ↵	0 … 64 characters	
			Reading reliability ↵		2 … 100	
			Check digit method ↵		Check digit method used for decoding	
			Check digit transm. ↵		Check digit transmission different from standard / as required by the standard	
	Digital SWIO ↵	Sw. input/output 1-4 ↵	I/O mode ↵		Input / Output / Passive	page 91
			Switching input ↵	Inverted ↵	OFF / ON	
				Debounce time ↵	0 … 1000 ms	
				Start-up delay ↵	0 … 65535 ms	
				Pulse duration ↵	0 … 65535 ms	
				Switch-off delay ↵	0 … 65535 ms	
				Function ↵	Function that is carried out after the switching input is activated	
			Switching output ↵	Inverted ↵	OFF / ON	
				Signal delay ↵	0 … 65535 ms	
				Pulse duration ↵	0 … 65535 ms	
				Activ. function 1-4 ↵	Specifies the event that activates the switching output	
				Deactiv. function 1-4 ↵	Specifies the event that deactivates the switching output	
	Ethernet ↵	Ethernet interface ↵	IP address ↵		Address of the BCL 508*i*	page 94
			Gateway ↵		Gateway for the BCL 508*i*	
			Net mask ↵		Net mask for the subnet of the BCL 508*i*	
			DHCP activated ↵		Off/On	
		HOST communication ↵	TcpIP ↵	Activated ↵	Off/On	
				Mode ↵	Server/client - mode of TCP/IP communication for the BCL 508*i*	
				TcpIP client ↵	Other host settings: IP-adr., port number, timeout, repetition time	
				TcpIP server ↵	Port number of the BCL 508*i* for TCP/IP queries	
			UDP ↵	Activated ↵	Off/On	
				IP address ↵	of the host to which the data is to be transferred	
				Port number ↵	of the host to which the data is to be transferred	
Language ↵					Deutsch / English / Español / Français / Italiano	page 96
Service ↵	Diagnostics ↵				Number of readings, reading gates, reading rate / non-reading rate etc..	page 96
	Status messages ↵				Exclusively for service purposes by Leuze electronic	
Actions ↵	Start decoding ↵	Stop decoding			Perform a single reading	page 97
	Start alignment ↵	Stop alignment			Alignment aid (alignment mode)	
	Start auto-setup ↵	Stop auto-setup			Automatic detection of code type and number of digits	
	Start teach-in ↵	Stop teach-in			Teach-in of a reference code	