Leuze electronic

the sensor people

AMS 338*i*

Optical Laser Measurement System EtherCAT

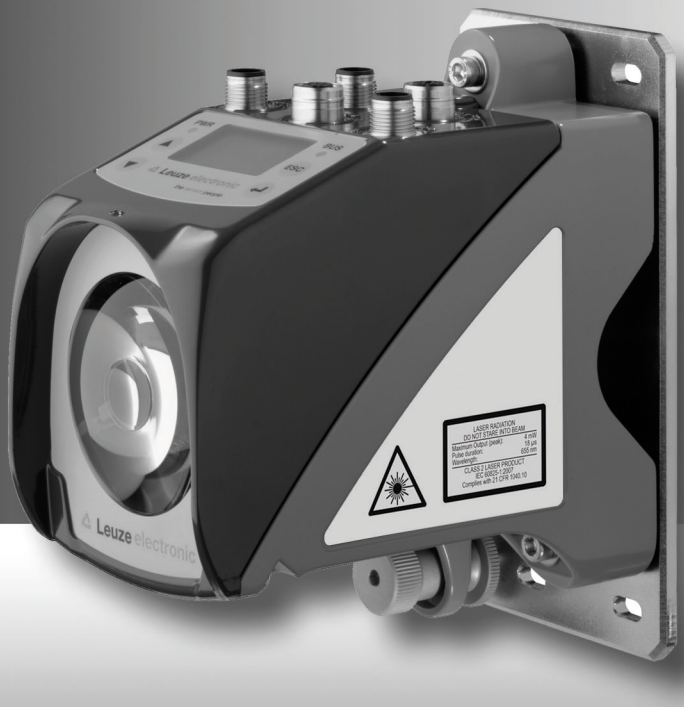

en 03-2014/12 50113361
We reserve the right to make technical changes

TECHNICAL DESCRIPTION

ПРОМЭЛЕКТРОНИКА / sales@prom-elec.com

© 2014
Leuze electronic GmbH + Co. KG
In der Braike 1
D-73277 Owen - Teck / Germany
Phone: +49 7021 573-0
Fax: +49 7021 573-199
http://www.leuze.com
info@leuze.de

The main menus

```
AMS 338i 120
Leuze electronic
        GmbH & Co. KG
SW: V 1.3.0   HW:1
SN: ----------------------
```

Device information - main menu

This menu item contains detailed information on
- Device model,
- Manufacturer,
- Software and hardware version,
- Serial number.

No entries can be made via the display.

```
Network information
Address:    1
Alias:      1
Status:     INIT, PRE, SAFE, OP
```

Network information - main menu

Explanations of address, alias, status.
No entries can be made via the display.

```
IO1 LSR PLB        ECAT
IO2 TMP ATT
ERR

  + 87.000m
```

Status- and measurement data - main menu

- Display of status-, warning-, and error messages.
- Status overview of the switching inputs/outputs.
- Bar graph for the reception level.
- Activated interface.
- Measurement value.

No entries can be made via the display.
See "Indicators in the display" on page 37.

```
Parameter
  Parameter handling
  EtherCAT
  Position value
  I/O
  Other
```

Parameter - main menu

- Configuration of the AMS.

See "Parameter menu" on page 43.

```
Language selection
o Deutsch
● English
o Español
o Français
o Italiano
```

Language selection - main menu

- Selection of the display language.

See "Language selection menu" on page 46.

```
Service
  Status messages
  Diagnostics
  Expanded diagnostics
```

Service - main menu

- Display of status messages.
- Display of diagnostic data.

No entries can be made via the display.
See "Service menu" on page 47.

Device buttons:

- Navigate **upward/laterally**
- Navigate **downward/laterally**
- ESC **ESCAPE** leave
- **ENTER** confirm

Input of values

```
100
 <-0123456789     save
Standard ----- Unit
   126  |     |
```

- ◄ + ↵ **Delete character**
- 0...9 + ↵ **Enter digit**
- save + ↵ **Save input**

1 General information 4

1.1 Explanation of symbols 4

1.2 Declaration of conformity 4

1.3 Description of functions AMS 338*i* 5

2 Safety 6

2.1 Intended use 6

2.2 Foreseeable misuse 7

2.3 Competent persons 7

2.4 Disclaimer 8

2.5 Laser safety notices 8

3 Fast commissioning / operating principle 11

3.1 Mounting the AMS 338*i* 11

3.1.1 Mounting the device 11

3.1.2 Mounting the reflector 11

3.2 Connecting the voltage supply 12

3.3 Display 12

3.4 AMS 338*i* on the EtherCat 12

4 Specifications 13

4.1 Specifications of the laser measurement system 13

4.1.1 General specifications AMS 338*i* 13

4.1.2 Dimensioned drawing AMS 338*i* 15

4.1.3 Type overview AMS 338*i* 16

5 Installation and mounting 17

5.1 Storage, transportation 17

5.2 Mounting the AMS 338*i* 18

5.2.1 Optional mounting bracket 20

5.2.2 Parallel mounting of the AMS 338*i* 21

5.2.3 Parallel mounting of AMS 338*i* and DDLS optical data transmission 22

5.3 Mounting the AMS 338*i* with laser beam deflector unit 23

5.3.1 Mounting the laser beam deflector unit With integrated mounting bracket 23

5.3.2 Dimensioned drawing of US AMS 01 deflector unit 24

5.3.3 Mounting the US 1 OMS deflector unit without mounting bracket 25

6 Reflectors 26

6.1 General information 26

6.2 Description of the reflective tape 26
6.2.1 Specifications of the self-adhesive foil 27
6.2.2 Specifications of the reflective tape on a metal plate 27
6.2.3 Dimensioned drawing of reflective tape on a metal plate 28
6.2.4 Specifications of heated reflectors 29
6.2.5 Dimensioned drawing of heated reflectors 30

6.3 Selecting reflector sizes 31

6.4 Mounting the reflector 32
6.4.1 General information 32
6.4.2 Mounting the reflector 32
6.4.3 Table of reflector pitches 35

7 Electrical connection 36

7.1 Safety notices for the electrical connection 36

7.2 PWR – voltage supply / switching input/output 37

7.3 EtherCAT BUS IN 37

7.4 EtherCAT BUS OUT 38

7.5 Service 38

8 Display and control panel AMS 338*i* 39

8.1 Structure of the control panel 39

8.2 Status display and operation 39
8.2.1 Indicators in the display 39
8.2.2 LED status displays 41
8.2.3 Control buttons 43

8.3 Menu description 44
8.3.1 The main menus 44
8.3.2 Parameter menu 45
8.3.3 Language selection menu 48
8.3.4 Service menu 49

8.4 Operation 49

9 EtherCAT interface 51

9.1 General information on EtherCAT 51

9.2 EtherCAT topology 51

9.3 EtherCAT – General information on wiring 52

9.4 EtherCAT – Cable lengths and shielding 52
9.5 EtherCAT electrical connection. 53
9.6 Starting the AMS 338*i* on the EtherCAT 54
9.7 CANopen over EtherCAT. 55
9.7.1 Device profile 55
9.7.2 Device description file. 55
9.7.3 Object index 56
9.7.4 Detailed description of EtherCAT-specific object area. 57
9.7.5 Process data objects 58
9.7.6 AMS 338*i*-specific object area 59
9.7.7 Objects of the AMS 338*i* from the DS406 class 1 encoder profile. 77

10 Diagnostics and troubleshooting 80

10.1 Service and diagnostics in the display of the AMS 338*i* 80
10.1.1 Status messages 80
10.1.2 Diagnostics 81
10.1.3 Expanded diagnostics 81
10.2 General causes of errors 81
10.2.1 Power LED 82
10.3 Interface errors. 82
10.3.1 BUS LED. 82
10.4 Status display in the display of the AMS 338*i* 83

11 Type overview and accessories 84

11.1 Type key. 84
11.1.1 Type overview AMS 338*i* (EtherCAT) 84
11.2 Overview of reflector types 85
11.3 Accessories 85
11.3.1 Accessory mounting bracket 85
11.3.2 Accessory deflector unit 85
11.3.3 Accessory M12 connector 85
11.3.4 Accessory ready-made cables for voltage supply 86
11.3.5 Accessory ready-made cables for EtherCAT 87

12 Maintenance. 89

12.1 General maintenance information. 89
12.2 Repairs, servicing 89
12.3 Disassembling, packing, disposing 89

1 General information

1.1 Explanation of symbols

The symbols used in this operating manual are explained below.

Attention!

This symbol precedes text messages which must strictly be observed. Failure to comply with this information results in injuries to personnel or damage to the equipment.

Attention Laser!

This symbol warns of possible danger caused by hazardous laser radiation.

Notice!

This symbol indicates text passages containing important information.

1.2 Declaration of conformity

The AMS 338*i* absolute measuring optical laser measurement system was designed and manufactured in accordance with applicable European directives and standards.

The AMS series is "UL LISTED" according to American and Canadian safety standards and fulfills the requirements of Underwriter Laboratories Inc. (UL).

Notice!

The Declaration of Conformity for these devices can be requested from the manufacturer.

The manufacturer of the product, Leuze electronic GmbH + Co. KG in D-73277 Owen/Teck, possesses a certified quality assurance system in accordance with ISO 9001.

EtherCAT® is registered trademark and patented technology, licensed by Beckhoff Automation GmbH, Germany.

1.3 Description of functions AMS 338*i*

The AMS 338*i* optical laser measurement system calculates distances to fixed as well as moving system parts. The distance to be measured is calculated according to the principle of the propagation time of radiated light. Here, the light emitted by the laser diode is reflected by a reflector onto the receiving element of the laser measurement system. The AMS 338*i* uses the "propagation time" of the light to calculate the distance to the reflector. The high absolute measurement accuracy of the laser measurement system and the fast integration time are designed for position control applications.

With the AMS 3xx*i* product series, Leuze electronic makes available a range of internationally relevant interfaces. Note that each interface version listed below corresponds to a different AMS 3xx*i* model.

AMS 304*i*

AMS 348*i*

AMS 355*i*

AMS 358*i*

AMS 335*i*

AMS 338*i*

AMS 308*i*

AMS 384*i*

AMS 301*i*

AMS 300*i*

2 Safety

This sensor was developed, manufactured and tested in line with the applicable safety standards. It corresponds to the state of the art.

2.1 Intended use

The AMS is an absolute measuring optical laser measurement system which allows distance measurement of up to 300 m against a reflector.

Areas of application

The AMS is designed for the following areas of application:

- Positioning of automated, moving plant components
- Travel and lifting axes of high-bay storage devices
- Repositioning units
- Gantry crane bridges and their trolleys
- Lifts
- Electroplating plants

CAUTION

Observe intended use!

- Only operate the device in accordance with its intended use. The protection of personnel and the device cannot be guaranteed if the device is operated in a manner not complying with its intended use.
  Leuze electronic GmbH + Co. KG is not liable for damages caused by improper use.
- Read the technical description before commissioning the device. Knowledge of this technical description is an element of proper use.

NOTICE

Comply with conditions and regulations!

- Observe the locally applicable legal regulations and the rules of the employer's liability insurance association.

Attention

For UL applications, use is permitted exclusively in Class 2 circuits according to NEC (National Electric Code).

2.2 Foreseeable misuse

Any use other than that defined under "Intended use" or which goes beyond that use is considered improper use.

In particular, use of the device is not permitted in the following cases:

- Rooms with explosive atmospheres
- Circuits relevant to safety
- For medicinal purposes

NOTICE
Do not modify or otherwise interfere with the device. Do not carry out modifications or otherwise interfere with the device. The device must not be tampered with and must not be changed in any way. The device must not be opened. There are no user-serviceable parts inside. Repairs must only be performed by Leuze electronic GmbH + Co. KG.

2.3 Competent persons

Connection, mounting, commissioning and adjustment of the device must only be carried out by competent persons.

Prerequisites for competent persons:

- They have a suitable technical education.
- They are familiar with the rules and regulations for occupational safety and safety at work.
- They are familiar with the technical description of the device.
- They have been instructed by the responsible person on the mounting and operation of the device.

Certified electricians

Electrical work must be carried out by a certified electrician.

Due to their technical training, knowledge and experience as well as their familiarity with relevant standards and regulations, certified electricians are able to perform work on electrical systems and independently detect possible dangers.

In Germany, certified electricians must fulfill the requirements of accident-prevention regulations BGV A3 (e.g. electrician foreman). In other countries, there are respective regulations that must be observed.

2.4 Disclaimer

Leuze electronic GmbH + Co. KG is not liable in the following cases:

- The device is not being used properly.
- Reasonably foreseeable misuse is not taken into account.
- Mounting and electrical connection are not properly performed.
- Changes (e.g., constructional) are made to the device.

2.5 Laser safety notices

ATTENTION LASER RADIATION – LASER CLASS 2

Never look directly into the beam!

The device satisfies the requirements of IEC 60825-1:2007 (EN 60825-1:2007) safety regulations for a product in **laser class 2** as well as the U.S. 21 CFR 1040.10 regulations with deviations corresponding to "Laser Notice No. 50" from June 24th, 2007.

- Never look directly into the laser beam or in the direction of reflecting laser beams.
  If you look into the beam path over a longer time period, there is a risk of injury to the retina.
- Do not point the laser beam of the device at persons!
- Interrupt the laser beam using a non-transparent, non-reflective object if the laser beam is accidentally directed towards a person.
- When mounting and aligning the device, avoid reflections of the laser beam off reflective surfaces!
- CAUTION! The use of operating or adjusting devices other than those specified here or carrying out of differing procedures may lead to dangerous exposure to radiation.
- Adhere to the applicable legal and local regulations regarding protection from laser beams.
- The device must not be tampered with and must not be changed in any way.
  There are no user-serviceable parts inside the device.
  Repairs must only be performed by Leuze electronic GmbH + Co. KG.

ПРОМЭЛЕКТРОНИКА / sales@prom-elec.com

NOTICE

Affix laser information and warning signs!

Laser information and warning signs are attached to the device (see figure 2.1):

In addition, self-adhesive laser warning and information signs (stick-on labels) are supplied in several languages (see figure 2.2).

- Affix the laser information sheet to the device in the language appropriate for the place of use.

  When using the device in the US, use the stick-on label with the "Complies with 21 CFR 1040.10" notice.
- Affix the laser information and warning signs near the device if no signs are attached to the device (e.g., because the device is too small) or if the attached laser information and warning signs are concealed due to the installation position.

  Affix the laser information and warning signs so that they are legible without exposing the reader to the laser radiation of the device or other optical radiation.

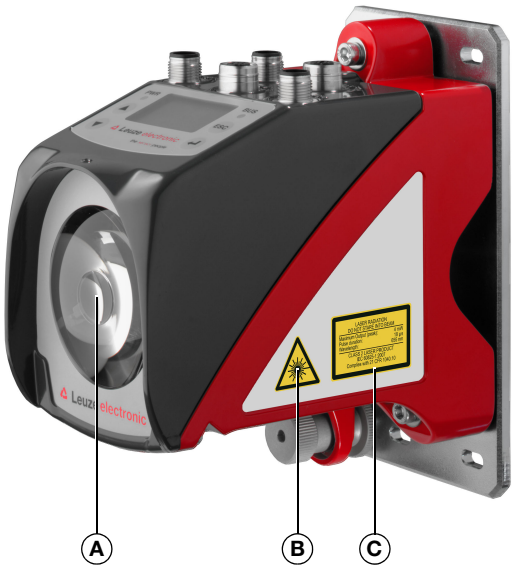

A Laser aperture
B Laser warning sign
C Laser information sign with laser parameters

Figure 2.1: Laser apertures, laser warning signs

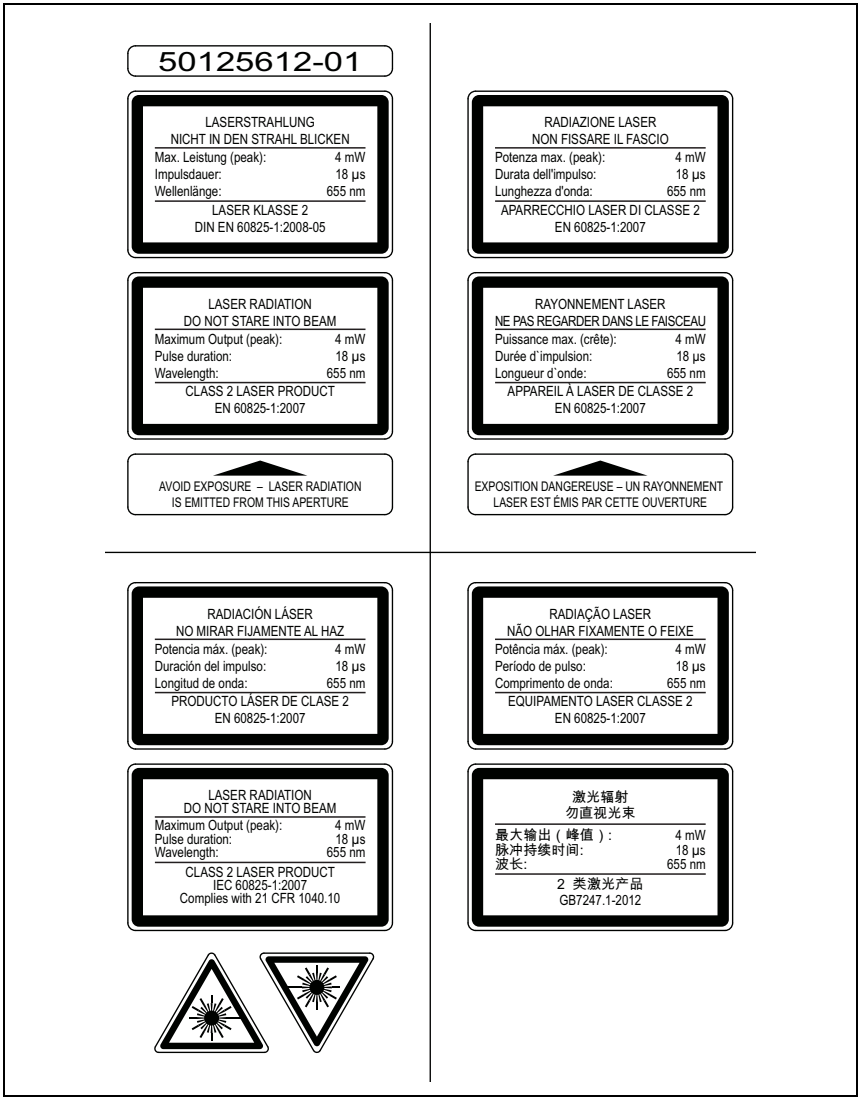

Figure 2.2: Laser warning and information signs – supplied stick-on labels

3 Fast commissioning / operating principle

Notice!

*Below, you will find a **short description for the initial commissioning** of the AMS 338i. Detailed explanations for the listed points can be found throughout the handbook.*

3.1 Mounting the AMS 338*i*

The AMS 338*i* and the corresponding reflector are mounted on two mutually opposing, plane-parallel, flat walls.

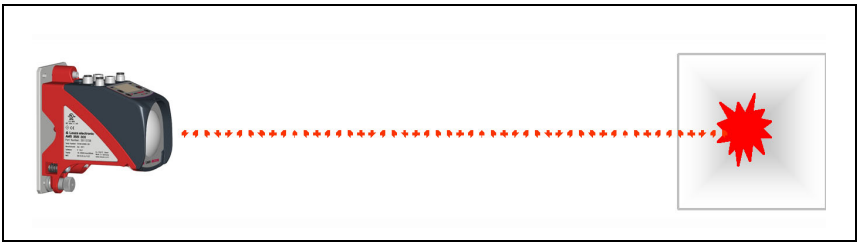

Figure 3.1: Schematic illustration of mounting

Attention!

For error-free position measurement, there must be an unobstructed line-of-sight between the AMS 338*i* *and the reflector.*

3.1.1 Mounting the device

The laser is mounted using 4 screws (M5).

Alignment is performed using 2 adjustment screws. Adjust so that the laser light spot is positioned at the center of the reflector. The alignment is to be secured with the knurled nut and locked with the M5 nut.

Further information can be found in chapter 5.2 and chapter 5.3.

3.1.2 Mounting the reflector

The reflector is mounted using 4 screws (M5). The reflector is angled using the spacer sleeves included. Incline the reflector by approx. 1°.

Detailed information can be found in chapter 6.4.

3.2 Connecting the voltage supply

The laser measurement system is connected using M12 connectors. The voltage supply is connected via the PWR M12 connection (18 … 30VDC). 2 freely programmable switching inputs/outputs for individual adaptation to the respective application are also available here.

Detailed information can be found in chapter 7.

3.3 Display

Once the laser measurement system is supplied with voltage, the device status as well as the measured position values can be read on the display. The display automatically switches to the display of the measurement values.

Use the up/down buttons ▲ ▼ to the left of the display to read and change a wide range of data and parameters.

Detailed information can be found in chapter 8.

3.4 AMS 338*i* on the EtherCat

Detailed information can be found in chapter 9.

4 Specifications

4.1 Specifications of the laser measurement system

4.1.1 General specifications AMS 338*i*

Measurement data	AMS 338*i* 40 (H)	AMS 338*i* 120 (H)	AMS 338*i* 200 (H)	AMS 338*i* 300 (H)
Measurement range	0.2 … 40 m	0.2 … 120 m	0.2 … 200 m	0.2 … 300 m
Accuracy	± 2 mm	± 2 mm	± 3 mm	± 5 mm
Consistency [1]	0.3 mm	0.5 mm	0.7 mm	1.0 mm
Light spot diameter	≤ 40 mm	≤ 100 mm	≤ 150 mm	≤ 225 mm
Measurement value output	1.7 ms			
Integration time	8 ms			
Resolution	adjustable, see chapter of the individual interfaces			
Temperature drift	≤ 0.1 mm/K			
Ambient temperature sensitivity	1 ppm/K			
Air pressure sensitivity	0.3 ppm/hPa			
Traverse rate	≤ 10 m/s			
Electrical data				
Supply voltage Vin [2]	18 … 30 VDC			
Current consumption	without device heating: ≤ 250 mA / 24 VDC with device heating: ≤ 500 mA / 24 VDC			
Optical data				
Transmitter	laser diode, red light, wavelength 650 … 690 nm			
Laser class	2 acc. to EN 60825-1, CDRH			
Interfaces				
Interface type	EtherCAT			
Baud rate	100 Mbit/s			
Vendor ID	$0x121_h$ or 289_{Dec}			
Device type	$0x00080196_h$ (absolute linear encoder)			
Operating and display elements				
Keyboard	4 buttons			
Display	monochromatic graphical display, 128 x 64 pixels			
LED	4 LEDs, 2 of which are used to display the EtherCAT connection			

Inputs/outputs	
Quantity	2, programmable
Input	protected against polarity reversal
Output	max. 60 mA, short-circuit proof
Mechanical data	
Housing	cast zinc and aluminum
Optics	glass
Weight	approx. 2.45 kg
Protection class	IP 65 acc. to EN 60529 [3]
Environmental conditions	
Operating temperature	
without device heating	-5 °C … +50 °C
with device heating	-30 °C … +50 °C [4]
Storage temperature	-30 °C … +70 °C
Air humidity	max. 90 % rel. humidity, non-condensing
Mechanical/electrical loading capacity	
Vibrations	acc. to EN 60068-2-6
Noise	acc. to EN 60060-2-64
Shock	acc. to EN 60068-2-27
EMC	acc. to EN 61000-6-2 and EN 61000-6-4 [5]

1) Statistical error: 1 sigma; minimum switch-on time: 2 min.
2) For UL applications: only for use in "Class 2" circuits acc. to NEC.
3) With screwed-on M12 plugs or mounted caps.
4) With devices with heating, the switch on/off area of the internal heating can be extended to prevent condensation from forming. A 100% prevention of the formation of condensation cannot be guaranteed due to the limited heating capacity of the AMS 338*i*.
5) This is a Class A product. In a domestic environment this product may cause radio interference, in which case the operator may be required to take adequate measures.

The AMS 338*i* is designed in accordance with safety class III for supply with PELV (protective extra-low voltage).

4.1.2 Dimensioned drawing AMS 338*i*

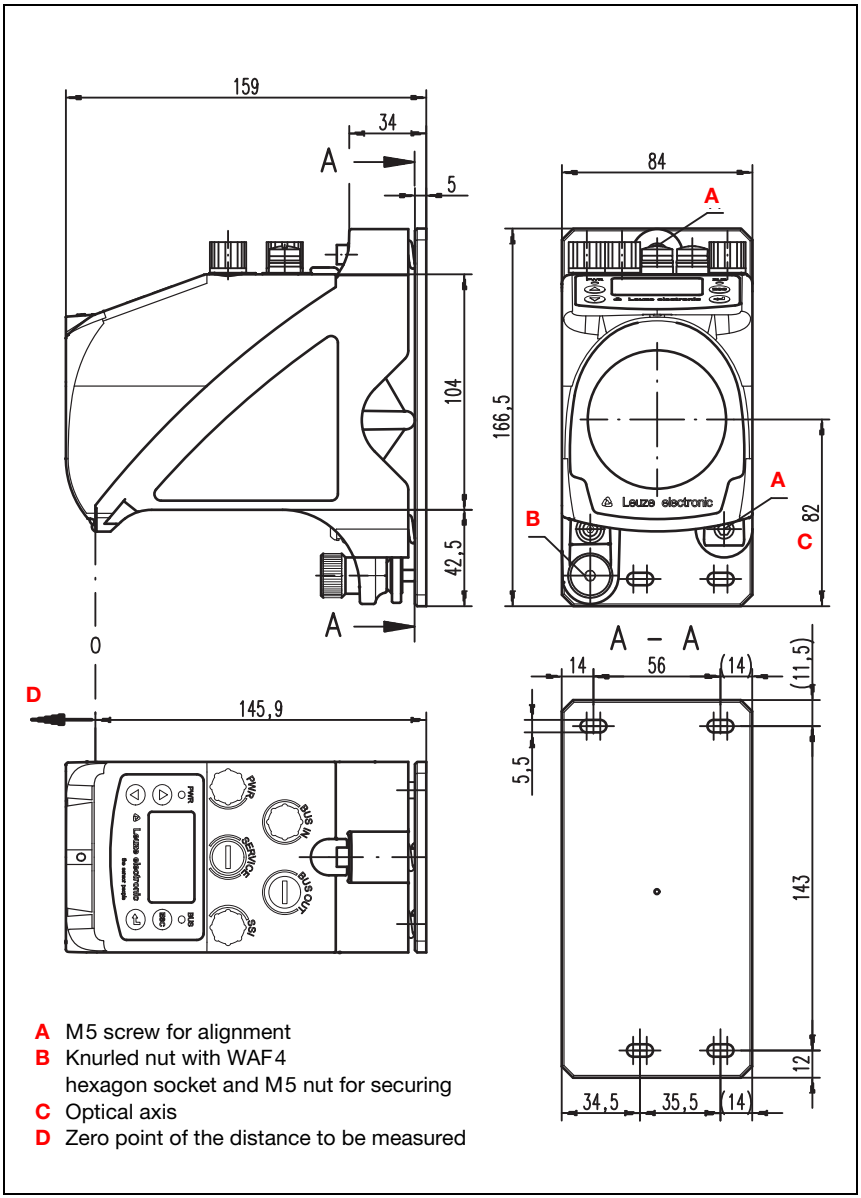

Figure 4.1: Dimensioned drawing AMS 338*i*

4.1.3 Type overview AMS 338*i*

AMS 338i (EtherCAT)

Type designation	Description	Part no.
AMS 338*i* 40	40 m operating range, EtherCAT interface	50113701
AMS 338*i* 120	120 m operating range, EtherCAT interface	50113702
AMS 338*i* 200	200 m operating range, EtherCAT interface	50113703
AMS 338*i* 300	300 m operating range, EtherCAT interface	50113704
AMS 338*i* 40 H	40 m operating range, EtherCAT interface, integrated heating	50113705
AMS 338*i* 120 H	120 m operating range, EtherCAT interface, integrated heating	50113706
AMS 338*i* 200 H	200 m operating range, EtherCAT interface, integrated heating	50113707
AMS 338*i* 300 H	300 m operating range, EtherCAT interface, integrated heating	50113708

Table 4.1: Type overview AMS 338*i*

5 Installation and mounting

5.1 Storage, transportation

Attention!

When transporting or storing, package the device so that it is protected against collision and humidity. Optimum protection is achieved when using the original packaging. Heed the required environmental conditions specified in the technical data.

Unpacking

- *Check the packaging for any damage. If damage is found, notify the post office or shipping agent as well as the supplier.*
- *Check the delivery contents using your order and the delivery papers:*
  - Delivered quantity
  - Device type and model as indicated on the nameplate
  - Brief manual

The name plate provides information as to what AMS 338*i* type your device is. For specific information, please refer to chapter 11.1.1.

Name plates

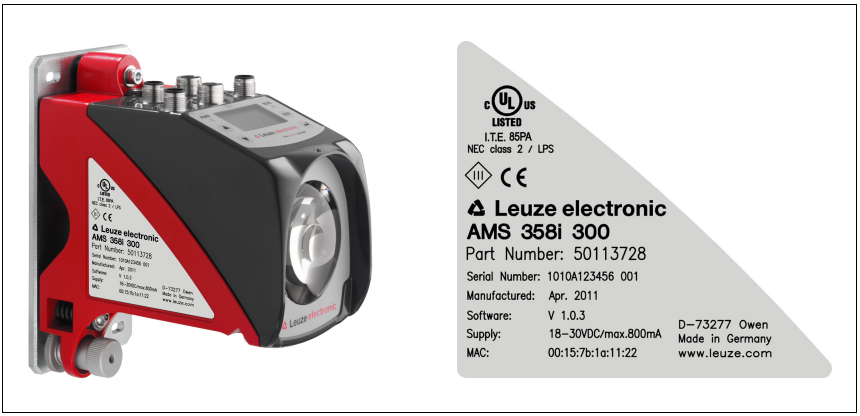

Figure 5.1: Device name plate using the AMS 300*i* as an example

Notice!

Please note that the shown name plate is for illustration purposes only; the contents do not correspond to the original.

- *Save the original packaging for later storage or shipping.*

If you have any questions concerning your shipment, please contact your supplier or your local Leuze electronic sales office.

Observe the applicable local regulations when disposing of the packaging materials.

5.2 Mounting the AMS 338*i*

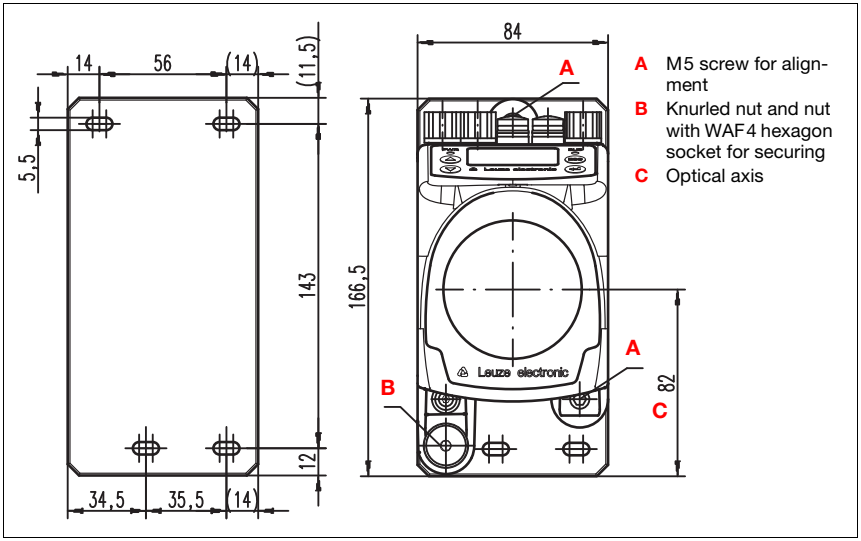

Figure 5.2: Mounting the device

The AMS 338*i* and the corresponding reflector are mounted on two mutually opposing, plane-parallel, flat walls or system parts. For error-free position measurement, there must be an unobstructed line-of-sight connection between the AMS 338*i* and the reflector.

Use M5 screws to fasten the laser measurement system. Secure the screws with a toothed lock washer to protect against loosening caused by vibrations.

Aligning the laser light spot in the center of the reflector

The laser light spot has to be aligned so that it always hits the center of the opposing reflector, both at close range as well as at the maximum measurement distance. **To align, use the two M5 Allen screws** ("**A**" in figure 5.2). When aligning please ensure that the knurled nut and the lock nut ("**B**" in figure 5.2) are opened wide.

Attention!

To prevent the laser measurement system from moving out of alignment during continuous operation, subsequently hand-tighten the knurled nut and counterlock with the nut with WAF4 hexagon socket ("B" in figure 5.2). Knurled nut and nut must not be tightened until alignment has been completed.

Attention!

The device must not be opened. Failure to comply will render the guarantee void. Warranted features cannot be guaranteed after the device has been opened.

5.2.1 Optional mounting bracket

A mounting bracket for mounting the AMS 338*i* on a flat, horizontal surface is available as an optional accessory.

Type designation:	MW OMS/AMS 01
Part no.:	50107255

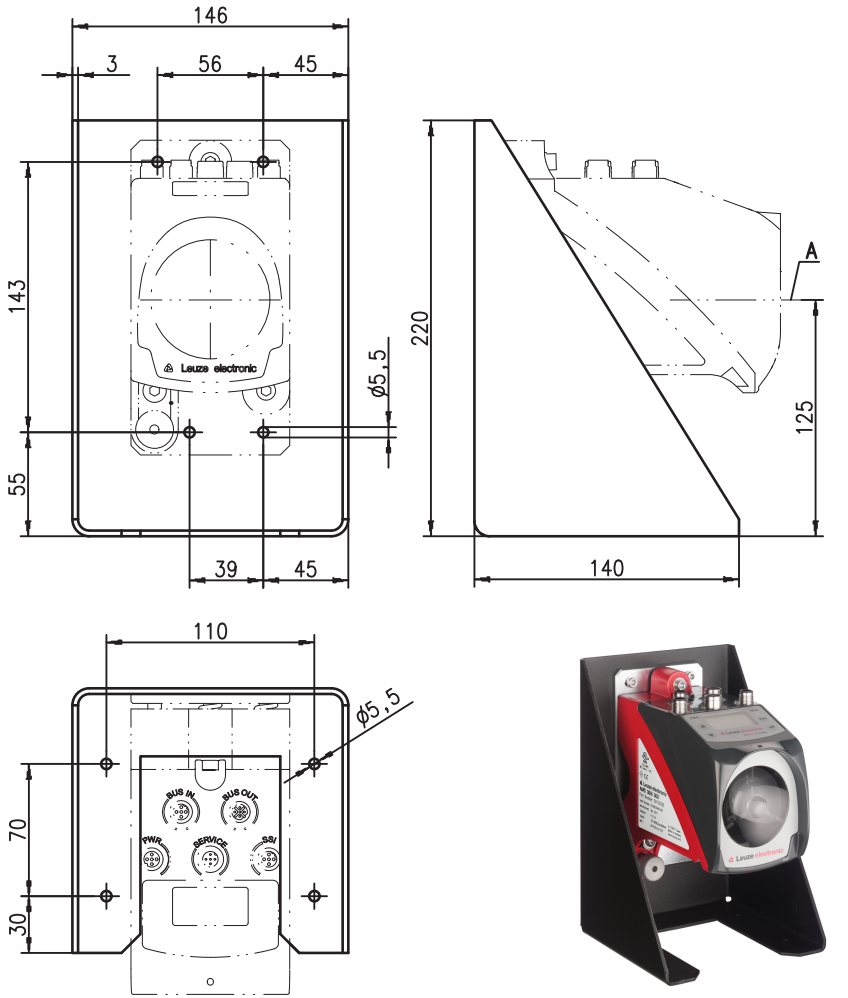

A Laser beam

Figure 5.3: Optional mounting bracket

5.2.2 Parallel mounting of the AMS 338*i*

Definition of the term "parallel spacing"

As shown in figure 5.4, dimension X describes the "parallel spacing" of the inner edges of the two laser light spots on the reflector.

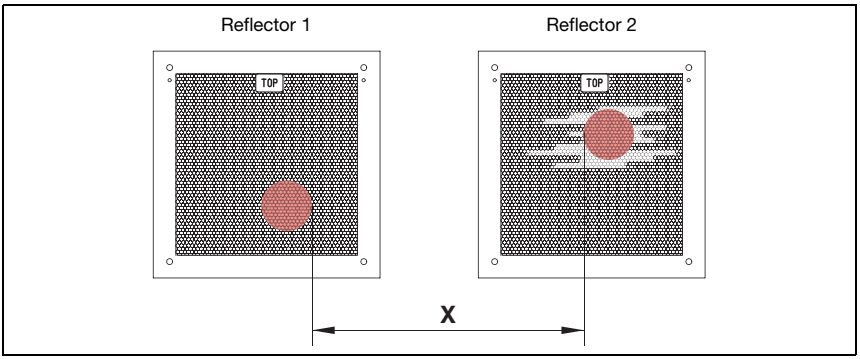

Figure 5.4: Minimum parallel spacing X between adjacent AMS 338*i*

The diameter of the light spot increases with distance.

	AMS 338*i* 40 (H)	AMS 338*i* 120 (H)	AMS 338*i* 200 (H)	AMS 338*i* 300 (H)
Max. measurement distance	40 m	120 m	200 m	300 m
Light spot diameter	≤ 40 mm	≤ 100 mm	≤ 150 mm	≤ 225 mm

Thus, the center-to-center spacing of the two AMS 338*i* devices with respect to one another can be calculated as a function of the maximum measurement distance.

To define the minimum parallel spacing between two AMS 338*i*, it is necessary to distinguish between three different arrangements of AMS 338*i* and reflectors.

The AMS 338*i* are mounted stationary and in parallel on one plane. Both reflectors move independently of one another at different distances to the AMS 338*i*.

Minimum parallel spacing X of the two laser light spots:

X = 100 mm + (max. measurement distance in mm x 0.01)

The AMS 338*i* are mounted stationary and in parallel on one plane. Both reflectors move in parallel at the same distance to the AMS 338*i*.

Measurement distance **up to 120 m**: minimum parallel spacing **X ≥ 600 mm**

Measurement distance **up to 200 m**: minimum parallel spacing **X ≥ 750 mm**

Measurement distance **up to 300 m**: minimum parallel spacing **X ≥ 750 mm**

The reflectors are mounted stationary and in parallel on one plane.
Both AMS 338*i* move independently of one another at different or the same distances to the reflectors.

Measurement distance **up to 120 m**: minimum parallel spacing **X ≥ 600 mm**

Measurement distance **up to 200 m**: minimum parallel spacing **X ≥ 750 mm**

Measurement distance **up to 300 m**: minimum parallel spacing **X ≥ 750 mm**

Notice!

*Please note that when the AMS 338*i* are mounted in a mobile manner, travel tolerances could cause the two laser light spots to move towards each other.*
*Take the travel tolerances of the vehicle into account when defining the parallel spacing of adjacent AMS 338*i*.*

5.2.3 Parallel mounting of AMS 338*i* and DDLS optical data transmission

The optical data transceivers of the DDLS series and the AMS 338*i* do not interfere with one another. Depending on the size of the used reflector, the DDLS can be mounted with a minimum parallel spacing of 100 mm to the AMS 338*i*. The parallel spacing is independent of the distance.

5.3 Mounting the AMS 338*i* with laser beam deflector unit

General information

The two available deflector units are used for the 90° deflection of the laser beam, see "Accessory deflector unit" on page 85.

Attention!

The deflector units are designed for a maximum range of 40 m.
Longer distances on request.

5.3.1 Mounting the laser beam deflector unit With integrated mounting bracket

The AMS 338*i* is screwed onto the mechanism of the US AMS 01 deflector unit. The mirror can be mounted for three deflection directions:

1. Upward beam deflection
2. Beam deflection to the left
3. Beam deflection to the right

The deflector unit is mounted on plane-parallel, flat walls or plant components. For error-free position measurement, there must be an interruption-free line-of-sight between the AMS 338*i*… and the deflection mirror as well as between the mirror and the reflector.

Use the M5 screws to mount the deflector unit. Secure the screws with a toothed lock washer to protect against loosening caused by vibrations.

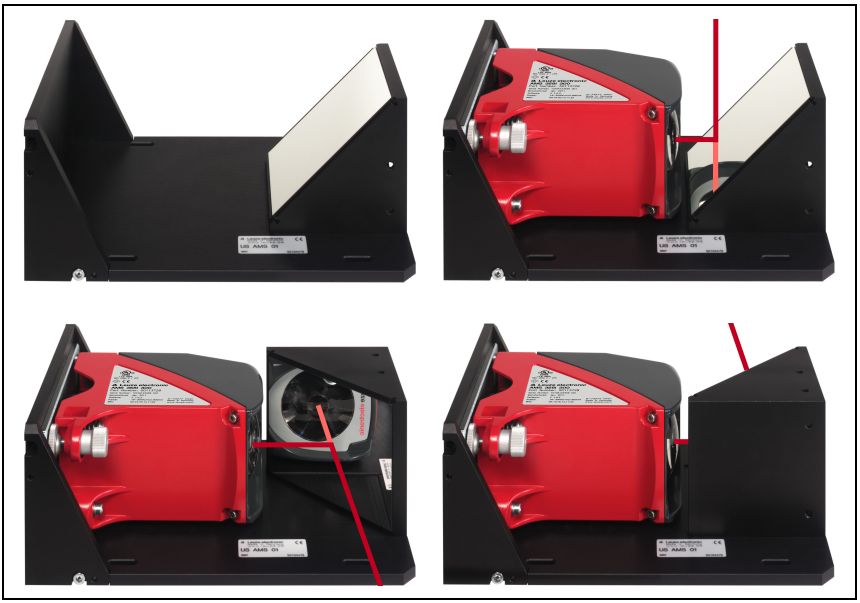

Figure 5.5: Mounting variants of the US AMS 01 laser beam deflector unit

5.3.2 Dimensioned drawing of US AMS 01 deflector unit

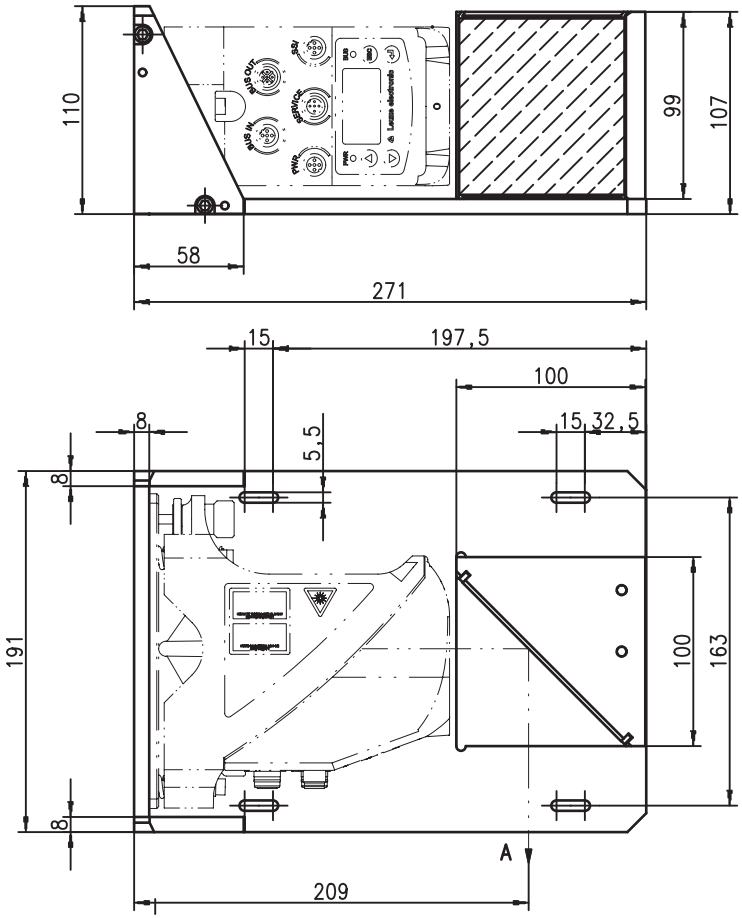

A Laser beam

Figure 5.6: Dimensioned drawing of US AMS 01 deflector unit

5.3.3 Mounting the US 1 OMS deflector unit without mounting bracket

The US 1 OMS deflector unit and the AMS 338*i* are mounted separately.

Notice!

When mounting, make certain that the laser light spot of the AMS 338i is aligned in the center of the deflection mirror.

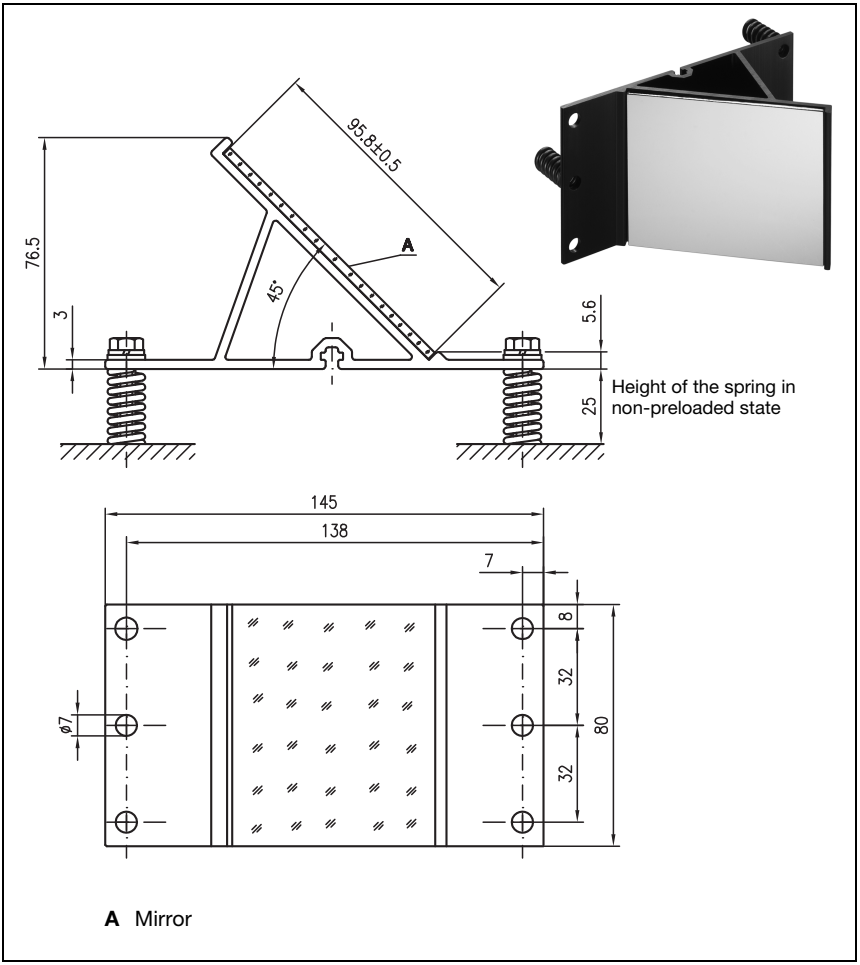

Figure 5.7: Photo and dimensioned drawing of the US 1 OMS deflector unit

Alignment of the laser light spot on the reflector is performed as described in chapter 5.2.

6 Reflectors

6.1 General information

The AMS 338*i* measures distances against a reflective tape specified by Leuze electronic. All provided specifications for the AMS 338*i*, such as the operating range or accuracy, can only be achieved with the reflective tape specified by Leuze electronic.

The reflective tapes are available as adhesive tapes, affixed to a metal plate and with an integrated heater especially for use at low temperatures. Reflective tapes with heating have the designation "**Reflective tape ...x...-H**", where "**H**" is an abbreviation for the heating variant.

The reflective tapes/reflectors must be ordered separately. The choice of size is left to the user. In chapter 6.3, recommendations on reflector size are provided as a function of the distance that is to be measured. In any case, the user must check to determine whether the recommendation is suitable for the respective application.

6.2 Description of the reflective tape

The reflective tape consists of a white, microprism-based reflective material. The microprisms are protected with a highly transparent, hard protective layer.

Under certain circumstances, the protective layer may lead to surface reflections. The surface reflections can be directed past the AMS 338*i* by positioning the reflective tape at a slight incline. The inclination of the reflective tape/reflectors is described in chapter 6.4.2. The required pitch can be found in table 6.1 "Reflector pitch resulting from spacer sleeves" on page 35.

The reflective tapes are provided with a protective foil that can easily be pulled off. This must be removed from the reflector before the complete system is put into operation.

6.2.1 Specifications of the self-adhesive foil

	Part		
Type designation	**Reflective tape 200x200-S**	**Reflective tape 500x500-S**	**Reflective tape 914x914-S**
Part no.	50104361	50104362	50108988
Foil size	200x200mm	500x500mm	914x914mm
Recommended application temperature for adhesive tape	+5°C … +25°C		
Temperature resistance, affixed	-40°C … +80°C		
Mounting surface	The mounting surface must be clean, dry and free of grease.		
Cutting the tape	Cut with a sharp tool, always on the side of the prism structure.		
Cleaning	Do not use any agents that act with a grinding effect. A conventional household detergent can be used as a cleaning agent. Rinse with clear water and dry the surface.		
Storing the foil	Store in a cool and dry place.		

6.2.2 Specifications of the reflective tape on a metal plate

The reflective tape is affixed to a metal plate. Included with the metal plate are spacers for positioning at an incline - for avoiding surface reflections - (see chapter 6.4.2 "Mounting the reflector").

	Part		
Type designation	**Reflective tape 200x200-M**	**Reflective tape 500x500-M**	**Reflective tape 914x914-M**
Part no.	50104364	50104365	50104366
Foil size	200x200mm	500x500mm	914x914mm
Outer dimensions of the metal plate	250x250mm	550x550mm	964x964mm
Weight	0.8kg	4kg	25kg
Cleaning	Do not use any agents that act with a grinding effect. A conventional household detergent can be used as a cleaning agent. Rinse with clear water and dry the surface.		
Storing the reflector	Store in a cool and dry place.		

6.2.3 Dimensioned drawing of reflective tape on a metal plate

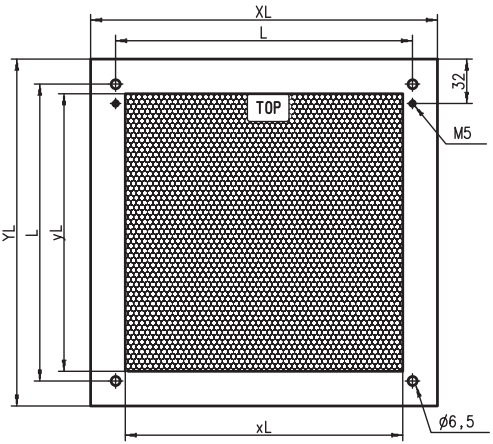

Always align the **TOP** marking with the AMS connections! (chapter 6.4.2)

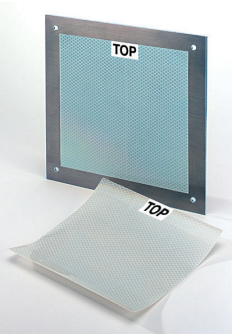

Figure 6.1: Dimensioned drawing of reflectors

Part	Reflective tape (mm)		Reflector plate (mm)		
	xL	yL	XL	YL	L
Reflective tape 200x200-M	200	200	250	250	214
Reflective tape 500x500-M	500	500	550	550	514
Reflective tape 914x914-M	914	914	964	964	928

6.2.4 Specifications of heated reflectors

The reflective tape is affixed to a heated, thermally insulated base. The insulation results in a very high energetic efficiency.

Only the reflective tape is kept at the specified temperature by the integrated heater. Through the insulation on the back, the generated heat cannot be transferred via the steel construction. Energy costs are greatly reduced in the case of continuous heating.

	Part		
Type designation	**Reflective tape 200x200-H**	**Reflective tape 500x500-H**	**Reflective tape 914x914-H**
Part no.	50115020	50115021	50115022
Voltage supply	230VAC		
Power	100W	600W	1800W
Current consumption	~ 0.5A	~ 3A	~ 8A
Length of the supply line	2 m		
Size of the reflective tape	200x200mm	500x500mm	914x914mm
Outer dimensions of the base material	250x250mm	550x550mm	964x964mm
Weight	0.5kg	2.5kg	12kg
Temperature control	Controlled heating with the following switch-on and switch-off temperatures, measured at the reflector surface.		
Switch-on temperature	~ 5°C		
Switch-off temperature	~ 20°C		
Operating temperature	-30°C … +70°C		
Storage temperature	-40°C … +80°C		
Air humidity	Max. 90%, non-condensing.		
Cleaning	Do not use any agents that act with a grinding effect. A conventional household detergent can be used as a cleaning agent. Rinse with clear water and dry the surface.		
Storing the reflector	Store in a cool and dry place.		

6.2.5 Dimensioned drawing of heated reflectors

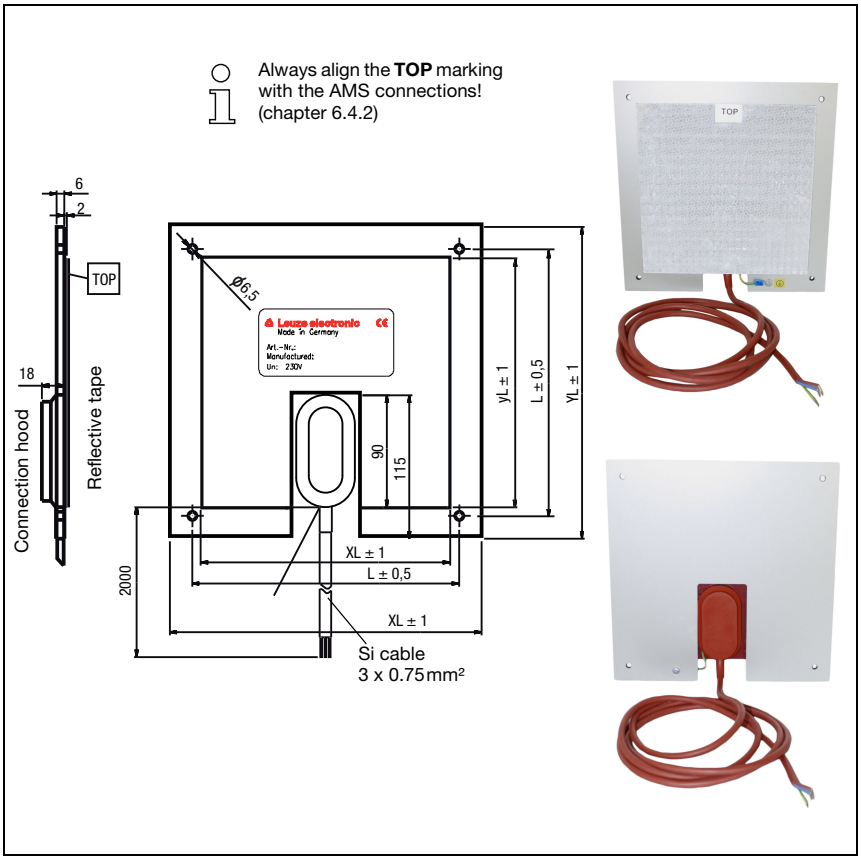

Figure 6.2: Dimensioned drawing of heated reflectors

Part	Reflective tape (mm)		Insulated base plate (mm)		
	xL	yL	XL	YL	L
Reflective tape 200x200-H	200	200	250	250	214
Reflective tape 500x500-H	500	500	550	550	514
Reflective tape 914x914-H	914	914	964	964	928

6.3 Selecting reflector sizes

Depending on system design, the reflector can be mounted so that it travels on the vehicle or it can be mounted at a fixed location.

Attention!

The reflector sizes shown below are a recommendation from Leuze electronic for on-vehicle mounting of the AMS 338i. For stationary mounting of the AMS 338i, a smaller reflector is generally sufficient for all measurement distances.
On the basis of the system planning and design, always check whether mechanical travel tolerances may require the use of a reflector larger than that which is recommended. This applies, in particular, when the laser measurement system is mounted on a vehicle. During travel, the laser beam must reach the reflector without interruption. For on-vehicle mounting of the AMS 338i, the reflector size must accommodate any travel tolerances that may arise and the associated "wandering" of the light spot on the reflector.

Overview of reflector types

Recommended reflector sizes			
AMS 338*i* selection (Operating range in m)	**Recommended reflector size (H x W)**	**Type designation …-S = Self-adhesive …-M = metal plate …-H = heating**	**Part no.**
AMS 338*i* 40 (**max. 40m**)	200x200mm	Reflective tape 200x200-S Reflective tape 200x200-M Reflective tape 200x200-H	50104361 50104364 50115020
AMS 338*i* 120 (**max. 120m**)	500x500mm	Reflective tape 500x500-S Reflective tape 500x500-M Reflective tape 500x500-H	50104362 50104365 50115021
AMS 338*i* 200 (**max. 200m**)	749x914mm 914x914mm	Reflective tape 749x914-S Reflective tape 914x914-M Reflective tape 914x914-S Reflective tape 914x914-H	50104363 50104366 50108988 50115022
AMS 338*i* 300 (**max. 300m**)	749x914mm 914x914mm	Reflective tape 749x914-S Reflective tape 914x914-M Reflective tape 914x914-S Reflective tape 914x914-H	50104363 50104366 50108988 50115022

6.4 Mounting the reflector

6.4.1 General information

Self-adhesive reflective tapes

The reflective tapes of the "Reflective tape …x…**-S**" self-adhesive series must be affixed to a flat, clean and grease-free surface. We recommend using a separate metal plate, which is to be provided on-site.

As described in table 6.1, the reflective tape must be angled.

Reflective tapes on metal

The reflective tapes of the "Reflective tape …x…**-M**" series are provided with corresponding mounting holes. Spacer sleeves are provided in the packet for achieving the necessary pitch angle. For further information see table 6.1.

Heated reflectors

The reflective tapes of the "Reflective tape ...x...**-H**" series are provided with corresponding mounting holes. Due to the voltage supply affixed on the rear, the reflector cannot be mounted flat. Included in the package are four distance sleeves in two different lengths. Use the distance sleeves to achieve a base separation to the wall as well as the necessary pitch for avoiding surface reflection. For further information see table 6.1.

The reflector is provided with a 2m-long connection cable for supplying with 230VAC. Connect the cable to the closest power outlet. Observe the current consumptions listed in the specifications.

Attention!

Connection work must be carried out by a certified electrician.

6.4.2 Mounting the reflector

The combination of laser measurement system and reflective tape/reflector is mounted so that the laser light spot hits the tape as centered as possible and without interruption.

For this purpose, use the alignment elements provided on the AMS 338*i*… (see chapter 5.2 "Mounting the AMS 338i"). If necessary, remove the protective foil from the reflector.

Attention!

The "TOP" label mounted on the reflectors should be aligned the same as the connections of the AMS 338*i*.

Example:

If the AMS 338i is mounted so that the M12 connections are on the top, the "TOP" label of the reflector is also on the top. If the AMS 338i is mounted so that the M12 connections are on the side, the "TOP" label of the reflector is also on the side.

Notice!

The reflector must be angled. To do this, use the spacer sleeves. Angle the reflectors so that the ***surface reflections of the foil seal are deflected to the left, right or upwards****, chapter 6.4.3 gives the correct pitch with respect to the reflector size and, thus, the length of the spacers.*

Reflective tapes …-S and …-M

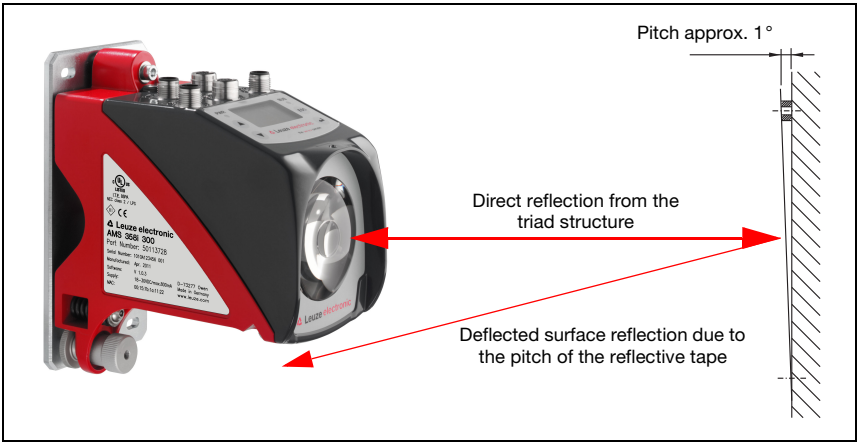

Figure 6.3: Reflector mounting

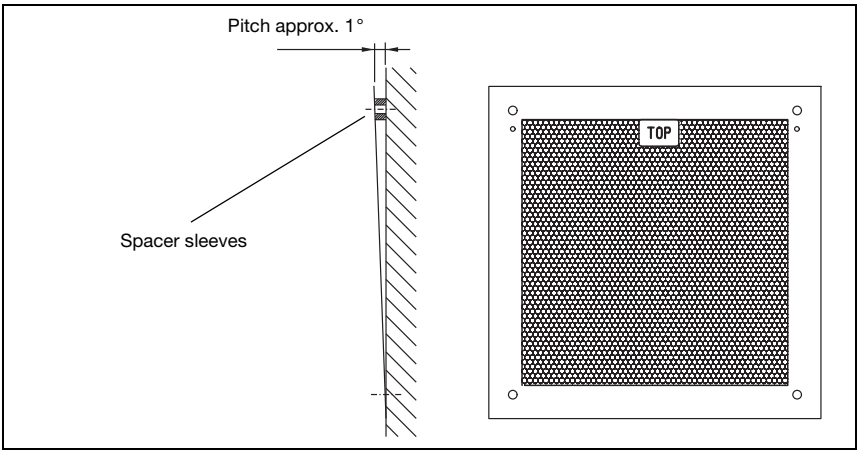

Figure 6.4: Pitch of the reflector

Reflective tapes ...-H

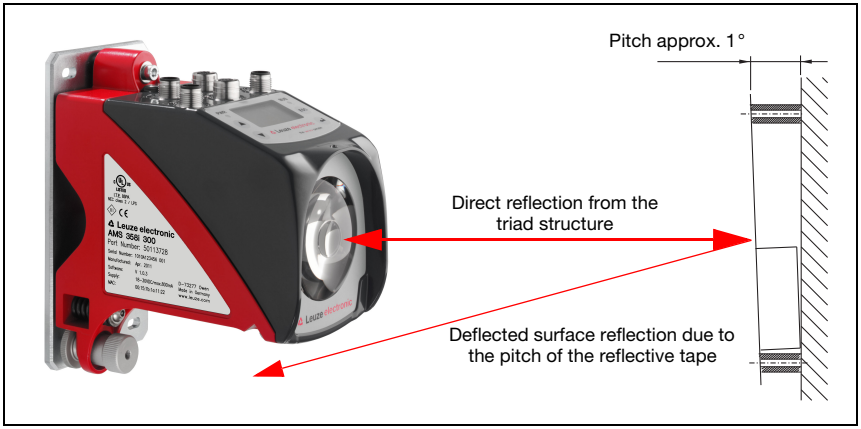

Figure 6.5: Mounting of heated reflectors

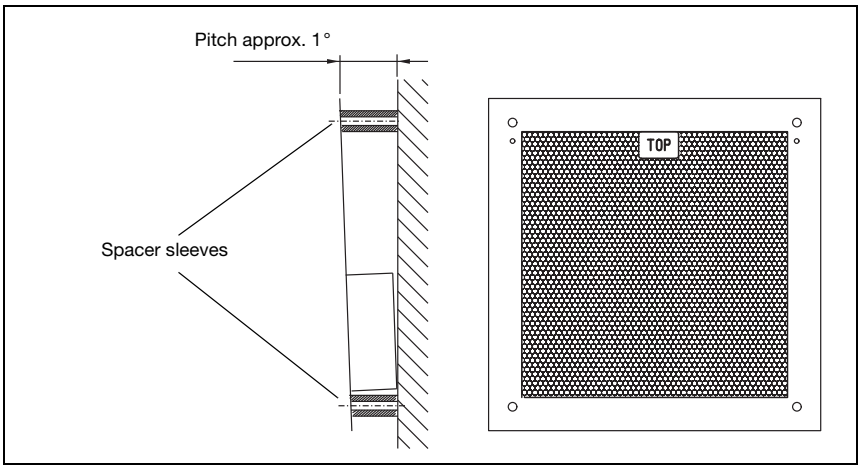

Figure 6.6: Pitch of the heated reflector

6.4.3 Table of reflector pitches

Reflector type	Pitch resulting from spacer sleeves [1]	
Reflective tape 200x200-S Reflective tape 200x200-M	**2 x 5mm**	
Reflective tape 200x200-H	**2 x 15mm**	**2 x 20mm**
Reflective tape 500x500-S Reflective tape 500x500-M	**2 x 10mm**	
Reflective tape 500x500-H	**2 x 15mm**	**2 x 25mm**
Reflective tape 749x914-S	**2 x 20mm**	
Reflective tape 914x914-S Reflective tape 914x914-M	**2 x 20mm**	
Reflective tape 914x914-H	**2 x 15mm**	**2 x 35mm**

1) Spacer sleeves are included in the delivery contents of reflective tape …-**M** and …-**H**

Table 6.1: Reflector pitch resulting from spacer sleeves

Notice!

Reliable function of the AMS 338i and, thus, max. operating range and accuracy can only be achieved with the reflective tape specified by Leuze electronic. No function can be guaranteed if other reflectors are used!

7 Electrical connection

The AMS 338*i* laser measurement systems are connected using variously coded M12 connectors. This ensures unique connection assignments.

Notice!

The corresponding mating connectors and ready-made cables are available as accessories for all cables. For further information, see chapter 11 "Type overview and accessories".

Figure 7.1: Connections of the AMS 338*i*

7.1 Safety notices for the electrical connection

Attention!

Before connecting the device, be sure that the supply voltage agrees with the value printed on the name plate.
The device may only be connected by a qualified electrician.
Ensure that the functional earth (FE) is connected correctly. Unimpaired operation is only guaranteed when the functional earth is connected properly.
If faults cannot be corrected, the device should be removed from operation and protected against possible use.

Attention!

For UL applications, use is permitted exclusively in Class 2 circuits according to NEC (National Electric Code).

The laser measurement systems are designed in accordance with safety class III for supply by PELV (protective extra-low voltage with reliable disconnection).

Notice!

Protection class IP65 is achieved only if the connectors and caps are screwed into place!

Described in detail in the following are the individual connections and pin assignments.

7.2 PWR – voltage supply / switching input/output

PWR (5-pin plug, A-coded)			
PWR	**Pin**	**Name**	**Remark**
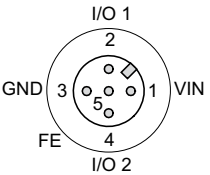	1	VIN	Positive supply voltage +18 … +30VDC
	2	I/O 1	Switching input/output 1
	3	GND	Negative supply voltage 0VDC
	4	I/O 2	Switching input/output 2
	5	FE	Functional earth
M12 plug (A-coded)	Thread	FE	Functional earth (housing)

Table 7.1: Pin assignment PWR

Further information on configuring the input/output can be found in chapter 8 and chapter 9.

7.3 EtherCAT BUS IN

BUS IN (4-pin socket, D-coded)			
BUS IN	**Pin**	**Name**	**Remark**
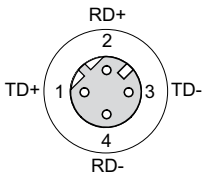	1	TD+	Transmit Data +
	2	RD+	Receive Data +
	3	TD-	Transmit Data -
	4	RD-	Receive Data -
M12 socket (D-coded)	Thread	FE	Functional earth (housing)

Table 7.2: Pin assignments for BUS IN

7.4 EtherCAT BUS OUT

BUS OUT (4-pin socket, D-coded)			
BUS OUT 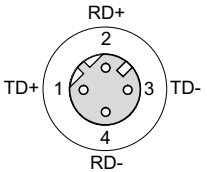 **M12 socket (D-coded)**	**Pin**	**Name**	**Remark**
	1	TD+	Transmit Data +
	2	RD+	Receive Data +
	3	TD-	Transmit Data -
	4	RD-	Receive Data -
	Thread	FE	Functional earth (housing)

Table 7.3: Pin assignment BUS OUT

7.5 Service

Service (5-pin socket, A-coded)			
SERVICE 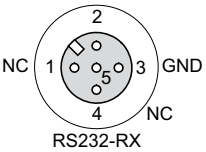 **M12 socket (A-coded)**	**Pin**	**Name**	**Remark**
	1	NC	Not used
	2	RS232-TX	Transmission line RS 232/service data
	3	GND	Voltage supply 0VDC
	4	RS232-RX	Receiving line RS 232/service data
	5	NC	Not used
	Thread	FE	Functional earth (housing)

Table 7.4: Service pin assignments

Notice!

The service interface is designed only for use by Leuze electronic!

8 Display and control panel AMS 338*i*

8.1 Structure of the control panel

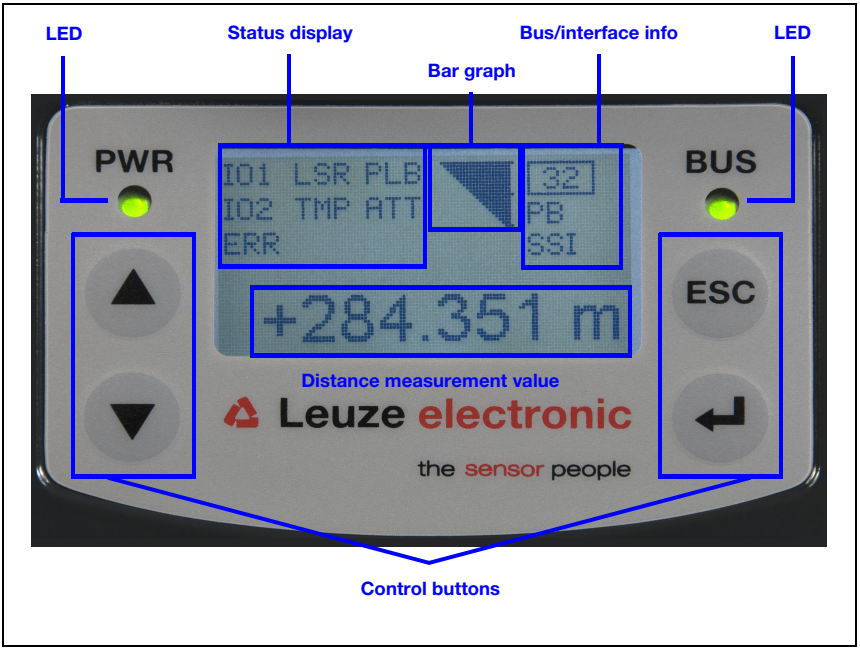

Figure 8.1: Structure of the control panel using the AMS 304*i* PROFIBUS device variant as an example

Notice!

The figure is for illustration purposes only and does not correspond to AMS 338i with respect to bus/interface info.

8.2 Status display and operation

8.2.1 Indicators in the display

Status and warning messages in the display

IO1 **Input 1 or output 1 active:**
Function depending on configuration.

IO2 **Input 2 or output 2 active:**
Function depending on configuration.

LSR **Warning - laser prefailure message:**
Laser diode old, device still functional, exchange or have repaired.

TMP **Warning - temperature monitoring:**
Permissible internal device temperature exceeded / not met.

PLB **Plausibility error:**
Implausible measurement value. Possible causes: light beam interruption, outside of measurement range, permissible internal device temperature considerably exceeded or traverse rate >10m/s.

Depending on the configuration, either zero or the last valid measurement value is output at the interfaces.

ATT **Warning received signal:**
Laser outlet window or reflector soiled or fogged by rain, water vapor or fog. Clean or dry surfaces.

ERR **Internal hardware error:**
The device must be sent in for inspection.

Bar graph

Indicates the **strength of the received laser light**.

The center bar represents the **ATT** warning threshold. The distance value remains valid and is output at the interfaces.

If no bar graph is available, the **PLB** status information appears at the same time.

The measurement value has thus been assessed as being implausible. Depending on the configuration, either zero or the last valid measurement value is output at the interfaces.

Interface info

The abbreviation "ECAT" indicates an activated EtherCAT interface.

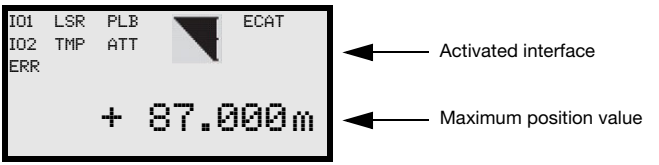

Maximum position value

The measured position value is displayed in the configured unit of measurement.

+87.000m With the **metric** setting, the measurement value is always displayed in meters with **three decimal places**.

+87.0in With the **inch** setting, the measurement value is always displayed in inches with **one decimal place**.

8.2.2 LED status displays

PWR LED

PWR	**Off**	**Device OFF** - No supply voltage
PWR	**Flashing green**	**Power LED flashes green** - No measurement value output - Voltage connected - Self test running - Initialization running - Boot process running
PWR	**Green continuous light**	**Power LED green** - AMS 338*i* ok - Measurement value output - Self test successfully finished - Device monitoring active
PWR	**Red flashing**	**Power LED flashes red** - Device ok but warning message (ATT, TMP, LSR) set in display - Light beam interruption - Plausibility error (PLB)
PWR	**Red continuous light**	**Power LED red** - No measurement value output; for details, see Display
PWR	**Orange continuous light**	**Power LED orange** - Parameter enable active - No data on the host interface

BUS LED

BUS	**Off**	**BUS LED off** - No voltage supply - Bus ok

BUS	**Flashing green**	**BUS LED flashes green** - “PRE-OPERATIONAL” state - “SAFE-OPERATIONAL” state
BUS	**Green continuous light**	**BUS LED green** - “OPERATIONAL” state
Net	**Flashing green/red**	**BUS LED flashes green/red** - Bus error - Time out - Process Data Watchdog Timeout
BUS	**Flashing red**	**BUS LED flashes red** - Invalid configuration -

LINK LED for BUS IN and BUS OUT

A green/yellow multicolor LED below the BUS IN and BUS OUT connectors indicates the EtherCAT connection status.

	Green continuous light	**LINK LED green** - The link exists, the hardware connection to the next connected participant is OK.
	Flashing yellow	**LINK LED flashes yellow** - Data is exchanged with the connected participants.

8.2.3 Control buttons

▲	**Up**	Navigate upward/laterally.
▼	**Down**	Navigate downward/laterally.
ESC	**ESC**	Exit menu item.
↵	**ENTER**	Confirm/enter value, change menu levels.

Navigating within the menus

The menus within a level are selected with the up/down buttons ▲ ▼.

The selected menu item is activated with the enter button ↵.
Press the ESC button ESC to move up one menu level.
When one of the buttons is actuated, the display illumination is activated for 10 min.

Setting values

If input of a value is possible, the display looks like this:

```
100
        <-l0123456789  save
    Default ---------------- unit
126          |    |
```

← + ↵	Delete character
0...9 + ↵	Enter digit
save + ↵	Save

Use the ▲ ▼ and ↵ buttons to set the desired value. An accidental, incorrect entry can be corrected by selecting <-l and then pressing ↵.
Then use the ▲ ▼ buttons to select Save and save the set value by pressing ↵.

Selecting options

If options can be selected, the display looks like this:

```
o OFF
  ON
   Default ---------------- unit
  OFF        |    |
```

Select the desired option with the ▲ ▼ buttons. Activate the option by pressing ↵.

8.3 Menu description

8.3.1 The main menus

After voltage has been applied to the laser, device information is displayed for several seconds. The display then shows the measurement window with all status information.

```
AMS 338i 120
Leuze electronic
          GmbH & Co. KG
SW: V 1.3.0   HW:1
SN: --------------
```

Device information - main menu

This menu item contains detailed information on
- Device model,
- Manufacturer,
- Software and hardware version,
- Serial number.

No entries can be made via the display.

```
Network information
Address:      1
Alias:        1
Status:       INIT, PRE, SAFE, O

P
```

Network information - main menu

- Explanations of address, alias, status.

No entries can be made via the display.

```
IO1  LSR  PLB        ECAT
IO2  TMP  ATT
ERR

      + 87.000m
```

Status and measurement data - main menu

- Display of status-, warning-, and error messages
- Status overview of the switching inputs/outputs.
- Bar graph for the reception level.
- Link.
- Measurement value.

No entries can be made via the display.
See "Indicators in the display" on page 39..

```
Parameter
  Parameter handling
  EtherCAT
  Maximum position value
  I/O
  Other
```

Parameter - main menu

- Configuration of the AMS.

See "Parameter menu" on page 45.

```
Language
selection
o Deutsch
o English
o Español
o Français
```

Language selection - main menu

- Selection of the display language.

See "Language selection menu" on page 48.

```
Service
  Status messages
  Diagnostics
  Expanded diagnostics
```

Service - main menu

- Display of status messages.
- Display of diagnostic data.

No entries can be made via the display.
See "Service menu" on page 49.

Notice!

***The rear cover** of this manual includes a **fold-out page** with the complete **menu structure**. It describes the menu items in brief.*

8.3.2 Parameter menu

Parameter handling submenu

The following functions can be called up in the `Parameter handling` submenu:

- Lock and enable parameter entry
- Set up a password
- Reset the AMS 338*i* to default settings.

Table 8.1: Parameter handling submenu

Level 3	Level 4	Level 5	Selection/configuration option Description	Standard
Parameter enabling			ON / OFF The standard setting (`OFF`) prevents unintended parameter changes. With parameter enabling activated (`ON`), the display is inverted. In this state, it is possible to change parameters manually.	OFF
Password	Activate password		ON / OFF To enter a password, parameter enabling must be activated. If a password is assigned, changes to the AMS 338*i* can only be made after the password is entered. The master password 2301 bridges the individually set password.	OFF
	Password entry		Configuration option of a four-digit numerical password	
Parameters to default			By pressing the enter button ↵ after selecting `Parameters to default`, all parameters are reset to their standard settings without any further security prompts. In this case, English is selected as the display language.	

Additional important information on parameter handling can be found at the end of the chapter.

EtherCAT submenu

Table 8.2: EtherCAT submenu

Level 3	Level 4	Level 5	Selection/configuration option Description	Standard
Activation			ON / OFF	ON
Address (station alias)			Configuration option 0 - 65535	0

Note regarding the second station address - in short SSA- (formerly station alias)

The SSA is a freely configurable position-independent address which is often used for the so-called hot connect. The values range from 0 to 65535. The SSA is persistently stored on the AMS 338i and is available after the next boot-up. A second option is to write the SSA to the Eeprom and the associated ESC register via the master (typically TwinCAT). In this

case, too, the SSA is persistently stored in the AMS 338i. The master (TwinCAT) can determine whether it wants to use the EtherCAT address (auto-increment address) or the SSA to address the AMS. For SSA, the position-dependent EtherCAT address is also set to the value of the SSA. Otherwise, the auto-increment address is entered into the ESC register which contains the EtherCAT address. The EtherCAT address is not stored in persistence memory, but written into the respective register by the master when the status changes from INIT to PREOP.

Position value submenu

Notice!

All parameters mentioned must be entered via startup parameters of the control software (TwinCAT). If parameters from the position value submenu are changed via the display, these are overwritten via the startup sequence created in the control with the values stored there.

Table 8.3: Position value submenu

Level 3	Level 4	Level 5	Selection/configuration option Description	Standard
Measurement unit			Metric/Inch Specifies the units of the measured distances	Metric
Count direction			Positive/Negative Positive: The measurement value begins at 0 and increases with increasing distance. Negative: The measurement value begins at 0 and decreases with increasing distance. Negative distance values may need to be compensated with an offset or preset.	Positive
Offset			Output value=measurement value+offset. The resolution of the offset value is independent of the selected "Resolution position" and is entered in mm or inch/100. The offset value is effective immediately following entry. If the preset value is activated, this has priority over the offset. Preset and offset are not offset against each other.	0 mm
Preset			The preset value is accepted by means of teach pulse. The teach pulse can be applied to a hardware input of the M12 PWR connector. The hardware input must be appropriately configured. See also configuration of the I/Os.	0 mm
Free resolution value			The measurement value can be resolved in increments of 1/1000 within the 5 … 50000 value range. If, e.g., a resolution of 0.875 mm per digit is required, the parameter is set to 875.	1000
Error delay			ON / OFF Specifies whether, in the event of an error, the position value immediately outputs the value of the "Position value in the case of error" parameter or the last valid position value for the configured error delay time.	ON/100 ms
Position value in the case of error			Last valid value / zero Specifies which position value is output after the error delay time elapses.	Zero

I/O submenu

Table 8.4: I/O submenu

Level 3	Level 4	Level 5	Selection/configuration option Description	Standard
I/O 1	Port configuration		Input/Output Defines whether I/O 1 functions as an output or input.	Output
	Switching input	Function	No function/preset teach/laser ON/OFF	No function
		Activation	Low active/High active	Low active
	Switching output	Function	Pos. limit value 1 / Pos. limit value 2 / Velocity / Intensity (ATT) / Temp. (TMP) / Laser (LSR) / Plausibility (PLB) / Hardware (ERR) The individual functions are "ORed" on the selected switching output.	Plausibility (PLB), hardware (ERR)
		Activation	Low active/High active	Low active
I/O 2	Port configuration		Input/Output Defines whether I/O 2 functions as an output or input.	Output
	Switching input	Function	No function/preset teach/laser ON/OFF	No function
		Activation	Low active/High active	Low active
	Switching output	Function	Pos. limit value 1 / Pos. limit value 2 / Velocity / Intensity (ATT) / Temp. (TMP) / Laser (LSR) / Plausibility (PLB) / Hardware (ERR) The individual functions are "ORed" on the selected switching output.	Intensity (ATT), Temp. (TMP), Laser (LSR)
		Activation	Low active/High active	Low active
Limit values	Upper pos. limit 1	Activation	ON / OFF	OFF
		Limit value input	Value input in mm or inch/100	0
	Lower pos. limit 1	Activation	ON / OFF	OFF
		Limit value input	Value input in mm or inch/100	0
	Upper pos. limit 2	Activation	ON / OFF	OFF
		Limit value input	Value input in mm or inch/100	0
	Lower pos. limit 2	Activation	ON / OFF	OFF
		Limit value input	Value input in mm or inch/100	0

Other submenu

Table 8.5: Other submenu

Level 3	Level 4	Level 5	Selection/configuration option Description	Standard
Heating control			Standard (10° C … 15° C)/Extended (30° C … 35°) Defines a switch-on/switch-off range for the heating control. The extended switch-on/switch-off range for heating may provide relief in the event of condensation problems. There is no guarantee that no condensation will occur on the optics in the extended switch-on/switch-off range due to the limited heating capacity. This parameter is available as standard, but functions only for devices with integrated heating (AMS 338*i*… **H**).	Standard
Display illumination			10 minutes/ON Display illumination is switched off after 10 minutes or, if the parameter is set to "ON", illumination is always on.	10 min.
Display contrast			Weak/Medium/Strong The display contrast may change at extreme temperature values. The contrast can subsequently be adapted using the three levels.	Medium
Service RS232	Baud rate		57.6 kbit/s / 115.2 kbit/s The service interface is only available to Leuze internally.	115.2 kbit/s
	Format		8,e,1 / 8,n,1 The service interface is only available to Leuze internally.	8,n,1

8.3.3 Language selection menu

```
Language
selection
o Deutsch
● English
o Español
o Français
```

There are 5 display languages available:

- German
- English
- Spanish
- French
- Italian

The AMS 338*i* is delivered from the factory with the display preset to English.

Notice!

When operating the AMS 338i on the EtherCAT, the language configured is used in the display.

To change the language, no password needs to be entered nor must password enabling be activated. The display language is a passive operational control and is, thus, not a function parameter, per se.

8.3.4 Service menu

```
Service
 Status messages
 Diagnostics
 Expanded diagnostics
```

A more detailed description of the individual functions can be found in chapter 10.

8.4 Operation

Described here is an operating process using parameter enabling as an example.

Parameter enabling

During normal operation parameters can only be viewed. If parameters are to be changed, the ON menu item in the Parameter -> Parameter handling -> Parameter enable menu must be activated. To do this, proceed as follows:

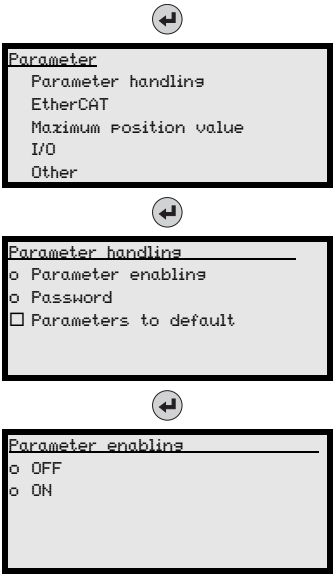

In the main menu, press the enter button to enter the Parameter menu.

Use the ▲ ▼ buttons to select the Parameter handling menu item.

Press the enter button to enter the Parameter handling menu.

In the Parameter handling menu, use the ▲ ▼ buttons to select the Parameter enabling menu item.

Press the enter button to enter the Parameter enabling menu.

In the Parameter enabling menu, use the ▲ ▼ buttons to select the ON menu item.

Press the enter button to switch on parameter enabling.

The PWR LED illuminates orange; the display is inverted. You can now set the individual parameters on the display.

Press the ESC button twice to return to the Parameter menu.

Viewing and editing parameters

As long as parameter enabling is activated, the entire AMS 338*i* display is inverted.

As long as parameter enabling is activated, communication between control and AMS 338*i* is interrupted. The continued networking via BUS OUT is retained.

Notice!

If a password was stored, parameter enabling is not possible until this password is entered, see "Password for parameter enabling" below.

Password for parameter enabling

Parameter entry on the AMS 338*i* can be protected with a password. The password can be changed via the CoE online dictionary, object $0x2300_h$, sub-index $0x05_h$.

For parameter enable via the display, the password must be entered. If parameter enabling has been activated after successfully entering the password, parameters can temporarily be changed via the display.

After parameter enable has been deactivated, all changes made at the display are overwritten by the CoE online dictionary, object $0x2300_h$, sub-index $0x05_h$ (see above). If a new password has been assigned, this, too, is overwritten by the password defined in the online dictionary.

Notice!

*The **master password 2301** can enable the AMS 338i at any time.*

9 EtherCAT interface

9.1 General information on EtherCAT

EtherCAT is an Ethernet-based fieldbus initialized by Beckhoff. The EtherCAT Technology Group (ETG) is the official standardization partner of the IEC working groups.

EtherCAT has been an IEC standard since 2005.

- IEC 61158: protocols and services
- IEC 61784-2: communication profiles for the specific device classes

All EtherCAT-specific communication mechanisms are explained in detail in the standards mentioned. The technical description of the AMS 338*i* will describe parts of the IEC standard, if this serves basic understanding.

9.2 EtherCAT topology

EtherCAT permits a wide range of topologies such as line, tree, ring, star and their combinations. The bus or line structure known from the fieldbuses is thus also available for EtherCAT.

Telegrams are transmitted on one line pair in the "processing direction" from the master to the slave. The EtherCAT device processes the frames only in this direction and sends them to the subsequent device until the telegram has passed through all devices. The last device returns the telegram on the second line pair in the cable in "forward direction" back to the master. Here, EtherCAT always forms a logical ring structure independent of the topology installed.

From the Ethernet perspective, an EtherCAT bus segment is nothing but a single, large Ethernet participant which receives and transmits Ethernet telegrams. However, there are many EtherCAT slaves within the "participant", not just a single Ethernet controller.

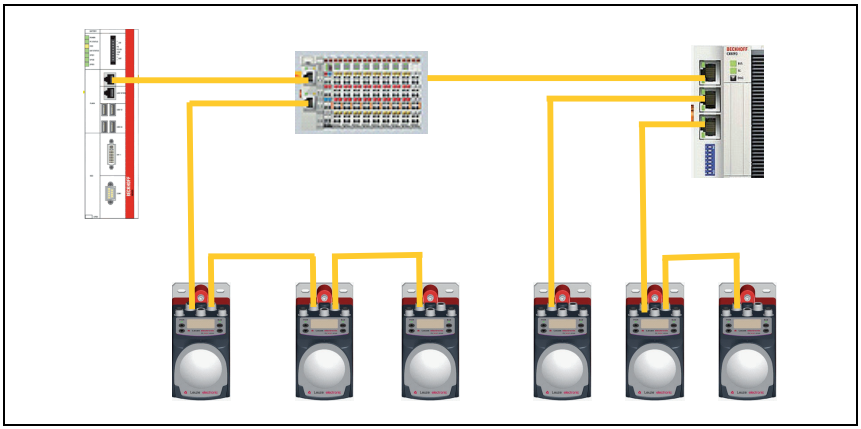

Figure 9.1: Topology example

9.3 EtherCAT – General information on wiring

The wiring uses the Industrial Ethernet fieldbus cable common in industry. For the AMS 338*i*, the EtherCAT connection is made via D-coded M12 connectors. A Cat. 5 Ethernet cable should be used for wiring.

Leuze electronic offers cables ready-made and featuring a D-coded M12 connector on one end and an open cable end at the other.

For further information, see chapter 7 "Electrical connection" and see chapter 11.3.5 "Accessory ready-made cables for EtherCAT".

The individual AMS 338*i* devices in a line topology are connected to each other using the "KB ET - … - SSA" cable with ready-made D-coded M12 connectors on both ends, see table "Order codes for EtherCAT connection cables" on page 88.

For unavailable cable lengths, you can configure your cables yourself. For this purpose, Leuze electronic offers a D-coded M12 connector for Bus IN and Bus OUT. When doing so, make certain that you connect **TD+** on the M12 connector with **RD+** on the RJ-45 connector and **TD-** on the M12 connector with **RD-** on the RJ-45 connector, respectively, etc.

For the connection technology transition from M12 to RJ45, a "KDS ET M12 / RJ 45 W - 4P" adapter is available.

9.4 EtherCAT – Cable lengths and shielding

Observe the following maximum cable lengths and shielding types:

Connection	Interface	Max. cable length	Shielding
AMS – host	EtherCAT	100 m	Absolutely required
Network from the first AMS to the last AMS	EtherCAT	The maximum segment length must not exceed 100 m for 100Base-TX Twisted Pair (min. Cat. 5)	Absolutely required

Table 9.1: Cable lengths and shielding

9.5 EtherCAT electrical connection

BUS IN (4-pin socket, D-coded)		
Pin	**Name**	**Remark**
1	TD+	Transmit Data +
2	RD+	Receive Data +
3	TD-	Transmit Data -
4	RD-	Receive Data -
Thread	FE	Functional earth (housing)

BUS OUT (4-pin socket, D-coded)		
Pin	**Name**	**Remark**
1	TD+	Transmit Data +
2	RD+	Receive Data +
3	TD-	Transmit Data -
4	RD-	Receive Data -
Thread	FE	Functional earth (housing)

Figure 9.2: EtherCAT - electrical connection

Notice!

*For contacting **BUS IN** and **BUS OUT**, we recommend our ready-made EtherCAT cable (see chapter 11.3.5 "Accessory ready-made cables for EtherCAT").*

To establish an EtherCAT network, the AMS 338*i* provides a receiving bus labeled BUS IN on the device, and a forwarding bus labeled BUS OUT. The AMS 338*i* can be connected to BUS OUT or to BUS IN using a stub cable.

↳ *For the connection of two AMS 338i, the "KB ET - … - SSA" ready-made cables are preferred, see table 11.3.5 "Accessory ready-made cables for EtherCAT" on page 87.*

If you use user-configurable cables, note the following:

Notice!

The entire connection cable must be shielded. The shielding connection must be at the same potential on both ends of the data line. This prevents potential compensating currents over the shield and possible interference coupling by compensating currents. The signal lines must be stranded in pairs.
Use CAT 5 cable for the connection.

Notice!

For the AMS 338i as standalone device or as the last participant in a linear topology, termination on the BUS OUT socket is not mandatory!

9.6 Starting the AMS 338*i* on the EtherCAT

INIT

The AMS 338*i* initializes itself. No direct communication between the master and AMS 338*i* is possible. The EtherCAT master will transit the AMS 338*i* step by step into the "operational" state.

In the status change from "INIT" to "PREOP", the TwinCAT or master writes the so-called EtherCAT address (=station address) to the respective register of the EtherCAT slave controller (here: AMS 338*i*). This EtherCAT address is typically specified in relation to the position, i.e., the master's address is 1000, the first slave's address is 1001, etc. This is also called the auto-increment method.

PRE-OPERATIONAL

The master and the AMS 338*i* exchange application-specific initializations and device-specific parameters. In the PRE-OPERATIONAL state, configuration is initially possible via SDOs only.

SAFE-OPERATIONAL

The "start input update" command puts the measurement system into the save-operational state. The master produces output data, but input data are not considered. This means the AMS 338*i* does not return output data (=PLC input data) in SAFEOP. The AMS does not process input process data (=PLC output data). Mailbox communication via CoE services is possible.

OPERATIONAL

The "start output update" command puts the measurement system into OPERATIONAL state. In this state, the AMS 338*i* supplies valid input data and the master valid output data. After the AMS 338*i* has detected the data received via the process data service, the state transition is confirmed by the AMS 338*i*. If the activation of the output data was not possible, the measurement system remains in the SAFE OPERATIONAL state and outputs an error message.

9.7 CANopen over EtherCAT

EtherCAT provides the communication mechanisms described below. In this context, the SDO accesses to the online dictionary via CoE (CANopen over EtherCAT) are carried out via mailbox services. PDO services via CoE mailboxes are not supported.

- Object index
- PDO, process data object
- SDO, service data object
- NMT, network management

Master and slave must be located in the same EtherCAT network.

9.7.1 Device profile

The device profile describes the application parameters and the functional behavior of the AMS 338*i*. For EtherCAT, one does not specify individual device profiles for device classes. Instead, simple interfaces for existing device profiles are provided.

The AMS 338*i* supports the DS406 "device profile for encoder" already known from CANopen.

9.7.2 Device description file

For the user, the object directory of the AMS 338*i* is stored in a so-called ESI file (EtherCAT slave information).

The ESI file contains all objects with index, sub-index, name, data type, default value, minimum and maximum, and access privileges.

The ESI file describes the entire functionality of the AMS 338*i*.

The ESI file has the name AMS 338*i*.xml and is available for download on the Leuze home page **www.leuze.com**.

Vendor ID for the AMS 338i

The Vendor ID assigned by Leuze electronic for the AMS 338*i* is $121_h = 289_d$

9.7.3 Object index

Overview: EtherCAT-specific object area of the AMS 338i

All process data and parameters are stored as objects in the AMS 338*i*. The object directory of the AMS 338*i* is the compilation of all process data and parameters of the AMS.

The following overview table shows the specific communication objects supported by the AMS 338*i*.

Object address in hex	EtherCAT-specific object area
1000	Device type
1001	Error register
1018	Identity object (contains general information regarding the device)
1A00	TPDO 1 position value and status synchronous
1A02	TPDO 3 velocity value and status synchronous

Overview: manufacturer-specific object area of the AMS 338i

Object address in hex	AMS 338*i*-specific object area
2000	Maximum position value
2001	Static preset
2002	Dynamic preset
2010	Position limit value 1
2011	Position limit value 2
2020	Velocity
2021	Velocity limit value 1
2022	Velocity limit value 2
2023	Velocity limit value 3
2024	Velocity limit value 4
2025	Velocity limit value dynamic
2026	Velocity status
2050	I/O 1
2051	I/O 2
2060	Status and control laser ON/OFF
2070	Error handling procedures
2300	Other

Overview: encoder-specific object area of the AMS 338i (DS406)

Object address in hex	Objects of the AMS 338*i* from the DS406 class 1 encoder profile
6000	Operating parameters
6004	Maximum position value
6500	Operating status
6501	Resolution measurement value

9.7.4 Detailed description of EtherCAT-specific object area

9.7.4.1 Object 1000_h Device type

The object describes the AMS 338*i* device type.

Index (hex)	Sub-index (hex)	Name	Data type	Access	Value range			Remark
					Minimum	Maximum	Default	
1000	--	Device type	u32	ro	--	--	00080196 h	Device profile 196_h Encoder type 8_h

Object data structure

Byte	Bit								Remark
	7	6	5	4	3	2	1	0	
0	196 $_h$								Device profile (196_h)
1									
2	8 $_h$								Encoder type (8_h)
3									

Device profile

The classification $196_h = 406_d$ describes the profile of an encoder and is adopted from the CANopen specification DS406 class 1. Accordingly, the AMS 338*i* is integrated into the profile definition of an encoder.

The object addresses above 6000_h describe the specified encoder functions.

Encoder

The $8_h = 8_d$ classification describes the AMS 338*i* as an absolute linear encoder as described in the DS406 specification.

9.7.4.2 Object 1018_h Identity object

This object contains general specifications about the AMS 338*i*.

Index (hex)	Sub-index (hex)	Name	Data type	Access	Value range			Remark
					Minimum	Maximum	Default	
1018	01	Vendor ID	u 32	ro	--	--	121 $_h$	Manufacturer ID number

The Vendor ID assigned by Leuze electronic for the AMS 338*i* is $121_h = 289_d$

9.7.5 Process data objects

The AMS 338*i* provides two process data objects (PDOs). The PDOs describe which of the objects are mapped (integrated) into the PDO.

9.7.5.3 Object 1A00$_h$ TPDO1

Transmission of position and status.

Index (hex)	Sub-index (hex)	Name	Data type	Access	Value range			Remark
					Minimum	Maximum	Default	
1A00	01	Maximum position value	u 32	ro	--	--	6004 00 20	Position value from object 6004
	02	Position value status	u 32	ro	--	--	2060 01 20	Status from object 2060

Data structure TPDO1 for the transfer of the position values and the position status

Byte	Bit								Remark
	7	6	5	4	3	2	1	0	
0								LSB	Position values see object description 6004$_h$
1									
2									
3	MSB								
4									Status see object description 2060$_h$ sub-index 01
5									
6									
7									

9.7.5.4 Object 1A02$_h$ TPDO3

Transmission of velocity and status.

Index (hex)	Sub-index (hex)	Name	Data type	Access	Value range			Remark
					Minimum	Maximum	Default	
1A02	01	Velocity value	int 32	ro	--	--	2020 04 20	Velocity value from object 2020 sub-index 04
	02	Status velocity value	u 16	ro	--	--	2026 00 10	Status from object 2026

Data structure TPDO3 for the transfer of the velocity values and the velocity status

Byte	Bit								Remark
	7	6	5	4	3	2	1	0	
0								LSB	Velocity value see object description 2020$_h$ sub-index 04

Byte	Bit								Remark
	7	6	5	4	3	2	1	0	
1	MSB								Status see object description 2026_h
2									
3									

9.7.6 AMS 338*i*-specific object area

9.7.6.1 Object 2000_h Position value

The object position value describes the following entries:

- Sign for negative position values
- Unit of the position value: metric or inch
- Resolution of the position value
- Counting direction of the position value
- A possible offset value
- Value for the free resolution

Index (hex)	Sub-index (hex)	Name	Data type	Access	Value range			Remark
					Minimum	Maximum	Default	
2000	01	Sign	u 8	rw	0	1	0	**0 = two's complement** 1 = sign + quantity
	02	Measurement unit	u 8	rw	0	1	0	**0 = metric** 1 = inch (in)
	03	Resolution	u 8	rw	0	6	4	Value 1 = 0.001 Value 2 = 0.01 Value 3 = 0.1 **Value 4 = 1** Value 5 = 10 Value 6 = free resolution
	04	Count direction	u 8	rw	0	1	0	**0 = positive** 1 = negative for further remarks, see below
	05	Offset value	int 32	rw	-999999	999999	0	see remarks below
	06	Free resolution value	u 16	rw	5	50000	1000	see remarks below

Sub-index 03 resolution

The resolution in mm or inch/100, in accordance with the unit selected.

The value for the free resolution must be set in sub-index 06.

Sub-index 04 counting direction

Attention!

The DS406 encoder specification prescribes that the counting direction can be set in object 6000 bit 3. Object 2000 sub-index 04 and object 6000 bit 3 overwrite each other.

The count direction changes the sign during velocity measurement.

For the EtherCAT interface, no negative position values can be transferred. In this case, the value 0 is output at the EtherCAT interface.

A suitable offset is to be selected so that only positive values are transferred.

Counting direction positive:

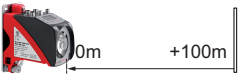

Counting direction negative:

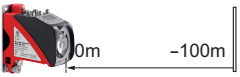

Sub-index 05 offset value

The offset value in mm or inch/100, in accordance with the unit selected.

Output value = measurement value+offset.

If the preset value has been activated by a corresponding trigger signal, the preset value has priority over the offset value.

Preset value and offset value are not offset against each other. The resolution of the offset value is independent of the position value resolution selected. The offset value is active immediately without any further release.

Sub-index 06 free resolution

Free resolution in mm/1000 or inch/100000, in accordance with the unit selected.

The "free resolution" parameters from sub-index 03 and the "value free resolution" from sub-index 06 are mutually dependent. The value of the free resolution is multiplied by mm/1000 or inch/100000 in accordance with the unit selected. The multiplication product is then the free resolution that has been set.

9.7.6.2 Object 2001_h Static preset value

The static preset value is a parameter that is not changed after the handover of the system to the end user. It is configured during commissioning and remains unchanged thereafter.

A preset value can be entered into the object. The preset value is activated with "preset teach" and deactivated with "preset reset". After preset teach, the current position value is offset against the configured preset value. After preset reset, the original measurement value is displayed.

Index (hex)	Sub-index (hex)	Name	Data type	Access	Value range			Remark
					Minimum	Maximum	Default	
2001	01	Preset value static	int 32	rw	-999999	999999	0	Preset value, in mm or in/100 depending on the unit selected
	02	Preset settings	u 8	rw	0	2	0	Value 1 = preset teach Value 2 = preset reset

9.7.6.3 Object 2002_h Dynamic preset value

The dynamic preset value can be adapted permanently via the control.

The dynamic preset value is activated with "preset teach" and deactivated with "preset reset". After preset teach, the current position value is offset against the configured preset value. After preset reset, the original measurement value is displayed.

Index (hex)	Sub-index (hex)	Name	Data type	Access	Value range			Remark
					Minimum	Maximum	Default	
2002	01	Preset value static	int 32	rw	-999999	999999	0	Preset value, in mm or in/100 depending on the unit selected
	02	Preset settings	u 8	rw	0	2	0	Value 1 = preset teach Value 2 = preset reset

9.7.6.4 Object 2010_h Position limit value range 1

The position limit value range 1 object defines a distance range with lower and upper limits. If the measured value lies outside the configured range, the corresponding status bits are set in objects 2050_h, 2051_h and 2060_h.

Index (hex)	Sub-index (hex)	Name	Data type	Access	Value range			Remark
					Minimum	Maximum	Default	
2010	01	Enable position limit value 1	u8	rw	0	1	0	**0 = deactivated** 1 = activated
	02	Lower position limit value 1	int 32	rw	-999999	999999	0	see remarks below
	03	Upper position limit value 1	int 32	rw	-999999	999999	0	see remarks below

Sub-index 02 / Sub-index 03

The lower and upper position limit values are entered in mm or inch/100 according to the unit selected.

9.7.6.5 Object 2011_h Position limit value range 2

The position limit value range 2 object defines a distance range with lower and upper limits. If the measured value lies outside the configured range, the corresponding status bits are set in objects 2050_h, 2051_h and 2060_h.

Index (hex)	Sub-index (hex)	Name	Data type	Access	Value range			Remark
					Minimum	Maximum	Default	
2011	01	Enable position limit value 2	u8	rw	0	1	0	**0 = deactivated** 1 = activated
	02	Lower position limit value 2	int 32	rw	-999999	999999	0	see remarks below
	03	Upper position limit value 2	int 32	rw	-999999	999999	0	see remarks below

Sub-index 02 / Sub-index 03

The lower and upper position limit values are entered in mm or inch/100 according to the unit selected.

9.7.6.6 *Object 2020$_h$ Velocity*

Outputs the current velocity with the configured resolution. The unit (metric or inch) is set in object 2000 sub-index 02 and also applies to the velocity. If no change is made in object 2000 sub-index 02, the AMS 338*i* uses the metric default setting.

The sign of the velocity is dependent on the count direction in object 2000 sub-index 04.

In the default setting a positive velocity is output when the reflector moves away from the AMS 338*i*. When the reflector moves towards the AMS 338*i*, negative velocities are output. If the "negative" count direction is configured in object 2000 sub-index 04, the velocity signs are reversed.

The integration time for the velocity averages all velocity values calculated during the selected period to yield a velocity value. This average velocity value is output via the interface.

Index (hex)	Sub-index (hex)	Name	Data type	Access	Value range			Remark
					Minimum	Maximum	Default	
2020	01	Velocity resolution	u8	rw	1	5	1	**Value 1: = 1** Value 2: = 10 Value 3: = 100 Value 4: = 1000 Value 5 = free resolution
	02	Integration time velocity	u8	rw	0	6	3	Unit ms Value 0: = 2 Value 1: = 4 Value 2: = 8 **Value 3: = 16** Value 4: = 32 Value 5: = 64 Value 6: = 128
	03	Free resolution velocity	u16	rw	5	50000	1000	The configured value is multiplied by mm/1000/s or in/100000/s.
	04	Velocity value	int 32	ro	-999999	999999	--	see below

The velocity value is mapped into process data objects 1A02$_h$ and 1A03$_h$.

Sub-index 01

The current velocity output occurs with the configured resolution. The unit (metric or inch) is set in object 2000 sub-index 02 and also applies to the velocity.

9.7.6.7 *Object 2021_h Configuration velocity monitoring 1*

Objects 2021_h to 2024_h permit the comparison between the current velocity as measured by the AMS 338*i* and a limit stored in the respective object.

Notice regarding velocity monitoring 1 - 4 and dynamic velocity monitoring

If range start and range end are identical, velocity monitoring is not activated.

If a direction-dependent limit value check is activated via the direction selection parameter, the values of position start and position end also define the direction. The check is always performed from position start to position end. For example, if the position start is "5500" and the position end is "5000", the direction-dependent check is only performed in the direction from "5500" to "5000". The limit value is not active in the opposite direction.

If the check is independent of direction, the order of position start and position end is irrelevant. Depending on the selected switching mode, if the value is above or below the defined limits, the limit value status in object 2026_h is set and, if configured, the switching output is set via object 2050_h or 2051_h.

Index (hex)	Sub-index (hex)	Name	Data type	Access	Value range			Remark
					Minimum	Maximum	Default	
2021	01	Limit value check	u8	rw	0	7	0	see below
	02	Velocity limit value 1	u16	rw	0	20000	0	mm/s or (in/100)/s
	03	Hysteresis of velocity limit value 1	u16	rw	0	20000	100	mm/s or (in/100)/s
	04	Monitoring from position start	int 32	rw	-999999	999999	0	mm or in/100
	05	Monitoring to position end	int 32	rw	-999999	999999	0	mm or in/100

Sub-index 01

Bit 0: switching mode

0 = upon exceeding the velocity limit
1 = upon falling below the velocity limit

Bit 1: direction selection

0 = direction independent velocity monitoring
1 = direction dependent velocity monitoring

Bit 2: velocity monitoring

0 = deactivated
1 = activated

Bit 3 - Bit 7: reserve

9.7.6.8 Object 2022_h Configuration velocity monitoring 2

Index (hex)	Sub-index (hex)	Name	Data type	Access	Value range			Remark
					Minimum	Maximum	Default	
2022	01	Limit value check	u 8	rw	0	7	0	see below
	02	Velocity limit value 1	u 16	rw	0	20000	0	mm/s or (in/100)/s
	03	Hysteresis of velocity limit value 1	u 16	rw	0	20000	100	mm/s or (in/100)/s
	04	Monitoring from position start	i 32	rw	-999999	999999	0	mm or in/100
	05	Monitoring to position end	i 32	rw	-999999	999999	0	mm or in/100

Sub-index 01

Bit 0: switching mode

0 = upon exceeding the velocity limit
1 = upon falling below the velocity limit

Bit 1: direction selection

0 = direction independent velocity monitoring
1 = direction dependent velocity monitoring

Bit 2: velocity monitoring

0 = deactivated
1 = activated

Bit 3 - Bit 7: reserve

9.7.6.9 Object 2023_h Configuration velocity monitoring 3

Index (hex)	Sub-index (hex)	Name	Data type	Access	Value range			Remark
					Minimum	Maximum	Default	
2023	01	Limit value check	u 8	rw	0	7	0	see below
	02	Velocity limit value 1	u 16	rw	0	20000	0	mm/s or (in/100)/s
	03	Hysteresis of velocity limit value 1	u 16	rw	0	20000	100	mm/s or (in/100)/s.
	04	Monitoring from position start	int 32	rw	-999999	999999	0	mm or in/100
	05	Monitoring to position end	int 32	rw	-999999	999999	0	mm or in/100

Sub-index 01

Bit 0: switching mode

0 = upon exceeding the velocity limit
1 = upon falling below the velocity limit

Bit 1: direction selection

0 = direction independent velocity monitoring
1 = direction dependent velocity monitoring

Bit 2: velocity monitoring

0 = deactivated
1 = activated

Bit 3 - Bit 7: reserve

9.7.6.10 Object 2024_h Configuration velocity monitoring 4

Index (hex)	Sub-index (hex)	Name	Data type	Access	Value range			Remark
					Minimum	Maximum	Default	
2024	01	Limit value check	u 8	rw	0	7	0	see below
	02	Velocity limit value 1	u 16	rw	0	20000	0	mm/s or (in/100)/s
	03	Hysteresis of velocity limit value 1	u 16	rw	0	20000	100	mm/s or (in/100)/s.
	04	Monitoring from position start	int 32	rw	-999999	999999	0	mm or in/100
	05	Monitoring to position end	int 32	rw	-999999	999999	0	mm or in/100

Sub-index 01

Bit 0: switching mode

0 = upon exceeding the velocity limit
1 = upon falling below the velocity limit

Bit 1: direction selection

0 = direction independent velocity monitoring
1 = direction dependent velocity monitoring

Bit 2: velocity monitoring

0 = deactivated
1 = activated

Bit 3 - Bit 7: reserve

9.7.6.11 Object 2025_h Configuration dynamic velocity monitoring

Index (hex)	Sub-index (hex)	Name	Data type	Access	Value range			Remark
					Minimum	Maximum	Default	
2025	01	Limit value check	u 8	rw	0	7	0	see below
	02	Velocity limit value 1	u 16	rw	0	20000	0	mm/s or (in/100)/s
	03	Hysteresis of velocity limit value 1	u 16	rw	0	20000	100	mm/s or (in/100)/s.
	04	Monitoring from position start	int 32	rw	-999999	999999	0	mm or in/100
	05	Monitoring to position end	int 32	rw	-999999	999999	0	mm or in/100

Sub-index 01

Bit 0: switching mode

0 = upon exceeding the velocity limit
1 = upon falling below the velocity limit

Bit 1: direction selection

0 = direction independent velocity monitoring
1 = direction dependent velocity monitoring

Bit 2: velocity monitoring

0 = deactivated
1 = activated

Bit 3 - Bit 7: reserve

9.7.6.12 Object 2026_h Velocity status

Index (hex)	Sub-index (hex)	Name	Data type	Access	Value range			Remark
					Minimum	Maximum	Default	
2026	--	Velocity status	u 32	ro	--	--	--	see below

Bit 0: velocity measurement error

0 = OK
1 = error

Bit 1: movement status

0 = no movement
1 = movement

Bit 2: movement status

0 = positive direction
1 = negative direction

Bit 3: velocity limit value status 1

0 = limit value maintained
1 = limit value violated

Bit 4: velocity limit value status 2

0 = limit value maintained
1 = limit value violated

Bit 5: velocity limit value status 3

0 = limit value maintained
1 = limit value violated

Bit 6: velocity limit value status 4

0 = limit value maintained
1 = limit value violated

Bit 7: velocity limit value status dynamic

0 = limit value maintained
1 = limit value violated

Bit 8: velocity comparison limit value 1

0 = comparison inactive
1 = comparison active

Bit 9: velocity comparison limit value 2

0 = comparison inactive
1 = comparison active

Bit 10: velocity comparison limit value 3

0 = comparison inactive
1 = comparison active

Bit 11: velocity comparison limit value 4

0 = comparison inactive
1 = comparison active

Bit 12: velocity comparison limit value dynamic

0 = comparison inactive
1 = comparison active

9.7.6.13 Object 2050_h Configuration I/O 1

Index (hex)	Sub-index (hex)	Name	Data type	Access	Value range			Remark
					Minimum	Maximum	Default	
2050	--	I/01	u 32	rw	--	--	--	see below

The settings in "bold" correspond to the default settings.

Bit 0: function of the I/O 1 connection at PWR M12

0 = input
1 = output

Bit 1: activation

If I/O 1 is defined as input (see bit 0):
0 = 1 - 0 transition
1 = 0 - 1 transition
If I/O 1 is defined as output (see bit 0):
0 = low active (the output is set to 0 if the event occurs)
1 = high active (the output is set to 1 if the event occurs)

Bit 2 - Bit 7: reserve

0 = reserve
1 = NC

Notice!

Bit 8 to bit 23 set the output via an "OR" logic.

Bit 8: position limit value 1

If the position value lies outside of configured limit value 1, the output is set.

0 = OFF
1 = ON

Bit 9: position limit value 2

If the position value lies outside of configured limit value 2, the output is set.

0 = OFF
1 = ON

Bit 10: velocity limit value

If the velocity value lies outside of the configured values, the output is set. Monitoring from objects 2021h to 2025h is "OR" linked to this bit.

0 = OFF
1 = ON

Bit 11: intensity monitoring (ATT)

If the intensity of the received signal falls below the predefined limit value, the output is set.

0 = OFF
1 = ON

Bit 12: temperature monitoring (TMP)

If the internal device temperature lies outside the predefined limit values, the output is set.

0 = OFF
1 = ON

Bit 13: laser prefailure monitoring (LSR)

If the laser power falls below the predefined limit value, the output is set.

0 = OFF
1 = ON

Bit 14: plausibility monitoring (PLB)

If implausible measurement values are diagnosed, the output is set.

0 = OFF
1 = ON

Bit 15: hardware error (ERR)

If a hardware error is diagnosed, the output is set.

0 = OFF
1 = ON

Bit 16 - Bit 23: reserve

0 = reserve
1 = NC

Bit 24 - Bit 26: function of the I/O 1, if this has been defined as an input

Value 000 =	**no function**
Value 001 =	preset teach, valid for static (object 2001) and dynamic (object 2002) preset
Value 010 =	laser OFF. Laser diode is switched off

Bit 27 - Bit 31: reserve

0 = reserve
1 = NC

9.7.6.14 Object 2051_h Configuration I/O 2

Index (hex)	Sub-index (hex)	Name	Data type	Access	Value range			Remark
					Minimum	Maximum	Default	
2051	--	I/02	u32	rw	--	--	--	see below

The settings in "bold" correspond to the default settings.

Bit 0: function of the I/O 2 connection at PWR M12

0 = input
1 = output

Bit 1: activation

If I/O 2 is defined as input (see bit 0):
0 = 1 - 0 transition
1 = 0 - 1 transition
If I/O 2 is defined as output (see bit 0):
0 = low active (the output is set to 0 if the event occurs)
1 = high active (the output is set to 1 if the event occurs)

Bit 2 - Bit 7: reserve

0 = reserve
1 = NC

Notice!

Bit 8 to bit 23 set the output via an "OR" logic.

Bit 8: position limit value 1

If the position value lies outside of configured limit value 1, the output is set.

0 = OFF
1 = ON

Bit 9: position limit value 2

If the position value lies outside of configured limit value 2, the output is set.

0 = OFF
1 = ON

Bit 10: velocity limit value

If the velocity value lies outside of the configured values, the output is set. The monitoring from objects 2021_h to 2025_h are "OR" linked to this bit.

0 = OFF
1 = ON

Bit 11: intensity monitoring (ATT)

If the intensity of the received signal falls below the predefined limit value, the output is set.

0 = OFF
1 = ON

Bit 12: temperature monitoring (TMP)

If the internal device temperature lies outside the predefined limit values, the output is set.

0 = OFF
1 = ON

Bit 13: laser prefailure monitoring (LSR)

If the laser power falls below the predefined limit value, the output is set.

0 = OFF
1 = ON

Bit 14: plausibility monitoring (PLB)

If implausible measurement values are diagnosed, the output is set.

0 = OFF
1 = ON

Bit 15: hardware error (ERR)

If a hardware error is diagnosed, the output is set.

0 = OFF
1 = ON

Bit 16 - Bit 23: reserve

0 = reserve
1 = NC

Bit 24 - Bit 26: function of the I/O 2, if this has been defined as an input

Value 000 =	**no function**
Value 001 =	preset teach, valid for static (object 2001) and dynamic (object 2002) preset
Value 010 =	laser OFF. Laser diode is switched off

Bit 27 - Bit 31: reserve

0 = reserve
1 = NC

9.7.6.15 Object 2060h status and control of the AMS 338*i*

In sub-index 01, the object provides the following status messages of the AMS 338*i*.

- Laser status ON/OFF
- Preset status ON/OFF
- Preset teach activated/not activated
- Monitoring lower position limit value 1
- Monitoring upper position limit value 1
- Monitoring lower position limit value 2
- Monitoring upper position limit value 2
- Intensity (ATT)
- Temperature (TMP)
- Laser (LSR)
- Plausibility (PLB)

In sub-index 02, the laser diode can be switched OFF/ON.

Index (hex)	Sub-index (hex)	Name	Data type	Access	Value range			Remark
					Minimum	Maximum	Default	
2060	01	Status	u32	ro	--	--	--	see below
	02	Laser ON/OFF	u8	rw	0	1	0	0 = laser ON 1 = laser OFF

Explanations on sub-index 01

Bit 0: hardware error (ERR)

0 = OK
1 = hardware error (ERR)

Bit 1 - Bit 3: reserve

0 = reserve
1 = NC

Bit 4: monitoring lower position value 1

0 = OK
1 = value less than limit

Bit 5: monitoring upper position value 1

0 = OK
1 = value exceeded

Bit 6: monitoring lower position value 2

0 = OK
1 = value less than limit

Bit 7: monitoring upper position value 2

0 = OK
1 = value exceeded

Bit 8: laser status

0 = OK
1 = laser OFF

Bit 9: preset status

0 = preset inactive

1 = preset active

Bit 10: preset teach (toogle bit)

This bit toggles on each teach event of a preset value

Bit 11 - Bit 12: reserve

0 = reserve
1 = NC

Bit 13: intensity (ATT)

If the intensity of the received signal falls below the predefined limit value, the warning is set.

0 = OK
1 = warning

Bit 14: temperature (TMP)

If the internal device temperature lies outside the predefined limit values, the warning is set.

0 = OK
1 = warning

Bit 15: laser (LSR)

If the laser power falls below the predefined limit value, the warning is set.

0 = OK
1 = warning

Bit 16: plausibility (PLB)

If implausible measurement values are diagnosed, the error is set.

0 = OK
1 = error

Bit 17 - Bit 31: reserve

0 = reserve
1 = NC

9.7.6.16 Object 2070_h Behavior of the AMS 338*i* in the case of error

Index (hex)	Sub-index (hex)	Name	Data type	Access	Value range			Remark
					Minimum	Maximum	Default	
2070	01	Behavior of position value in case of failure	u8	rw	0	13	13	see below
	02	Delay of position value in case of failure	u16	rw	100	1000	100	Delay of the error message in ms
	03	Behavior of velocity value in case of failure	u8	rw	0	13	13	see below
	04	Delay of velocity value in case of failure	u16	rw	200	1000	200	Delay of the error message in ms

Explanation on sub-index 01

Bit 0: position value in the case of error

0 = last valid value
1 = zero

Bit 1: static 0

Bit 2: suppress position state

0 = OFF
1 = ON

Bit 3: error delay position

0 = OFF
1 = ON

Explanation on sub-index 03

Bit 0: velocity value in the case of error

0 = last valid value
1 = zero

Bit 1: static 0

Bit 2: suppress velocity state

0 = OFF
1 = ON

Bit 3: error delay velocity

0 = OFF
1 = ON

9.7.6.17 Object 2300_h Other

Index (hex)	Sub-index (hex)	Name	Data type	Access	Value range Minimum	Maximum	Default	Remark
2300	01	Display language selection	u8	rw	0	4	0	**0 = English** 1 = German 2 = Italian 3 = Spanish 4 = French
	02	Illumination duration display	u8	rw	0	1	0	**0 = off after 10min.** 1 = always on
	03	Display contrast	u8	rw	0	2	1	0 = low **1 = medium** **2 = high**
	04	Password activation	u8	rw	0	1	0	**0 = OFF** 1 = ON
	05	Password	u16	rw	0000	9999	0000	Setting of a 4-digit password
	06	Heating control	u8	rw	0	1	0	see below

Notice!

Password activation must be set to ON.

Explanation on sub-index 06 "heating control"

0 = Standard (10°C … 15°C)
1 = Extended (30°C … 35°C)

Notice!

The sub-index 06 is available as standard, but functions only for devices with integrated heating (AMS 338i … H).

Sub-index 06 defines a switch-on/switch-off range for the heating control. The extended switch-on/switch-off range for heating may provide relief in the event of condensation problems. There is no guarantee that no condensation will occur on the optics in the extended switch-on/switch-off range due to the limited heating capacity.

9.7.7 Objects of the AMS 338*i* from the DS406 class 1 encoder profile

The AMS 338*i* adopts the profile from CANopen. The profile puts prescribed characteristics of the participant on defined object addresses.

The AMS 338*i* communicates according to the specifications in profile "DS406" class 1.

For class 1, it is mandatory to describe the following objects.

9.7.7.1 Object 6000_h Operating parameters

Index (hex)	Sub-index (hex)	Name	Data type	Access	Value range			Remark
					Minimum	Maximum	Default	
6000	--	Operating parameters	u16	rw	--	--	--	see below

Bit 0 - Bit 2

not used

Bit 3: counting direction

0 = positive - the measurement value increases with increasing distance.

1 = negative - the measurement value decreases with increasing distance.

Bit 4 - Bit 15: reserve

9.7.7.2 Object 6004_h Position value

Index (hex)	Sub-index (hex)	Name	Data type	Access	Value range			Remark
					Minimum	Maximum	Default	
6004	--	Maximum position value	int 32	ro	-999999	999999	--	see below

Object 6004_h contains the position value for process data objects (PDOs) $1A00_h$ (TPDO1))

Byte	Bit								Remark
	7	6	5	4	3	2	1	0	
0								LSB	Maximum position value
1									
2									
3	MSB								

9.7.7.3 Object 6500h display of operating status from object 6000

Index (hex)	Sub-index (hex)	Name	Data type	Access	Value range			Remark
					Minimum	Maximum	Default	
6500	--	Operating parameters	u16	ro	--	--	--	see below

Bit 0 - Bit 2

not used

Bit 3: counting direction

0 = positive - the measurement value increases with increasing distance.
1 = negative - the measurement value decreases with increasing distance.

Bit 4 - Bit 15: reserve

9.7.7.4 Object 6501_h Measurement step

Index (hex)	Sub-index (hex)	Name	Data type	Access	Value range			Remark
					Minimum	Maximum	Default	
6501	--	Measure-ment steps	u32	ro	--	--	--	see below

The resolution set in object 2000_h sub-index 03 is specified in multiples of 0.001 µm (1nm) in object 6501.

Example:

If the default resolution in object 2000_h is set to 1 mm, the resolution for object 6501 is converted to value 1 000 000. (1 000 000 x 1/1 000 000 = 1)

10 Diagnostics and troubleshooting

10.1 Service and diagnostics in the display of the AMS 338*i*

In the main menu of the AMS 338*i*, expanded "Diagnostics" can be called up under the Service heading.

```
Service
 Status messages
 Diagnostics
 Expanded diagnostics
```

From the Service main menu, press the enter button to access the underlying menu level.

Use the up/down buttons to select the corresponding menu item in the selected level; use the enter button to activate the selection.

Return from any sub-level to the next-higher menu item by pressing the ESC button.

10.1.1 Status messages

The status messages are written in a ring memory with 25 positions. The ring memory is organized according to the FIFO principle. No separate activation is necessary for storing the status messages. Power OFF clears the ring memory.

```
Status messages
1: - / - / -
2: - / - / -
3: - / - / -
```

Basic representation of the status messages

n: Type / No. / 1

Meaning:

n:	memory position in the ring memory
Type:	type of message: **I** = info, **W** = warning, **E** = error, **F** = severe system error
No:	internal error detection
1:	frequency of the event (always "1", since no summation occurs)

The status messages within the ring memory are selected with the up/down buttons. The enter button can be used to call up **detailed information** on the corresponding status messages with the following details:

Detailed information about a status message

Type: type of message + internal counter

UID: Leuze internal coding of the message

ID: description of the message

Info: not currently used

Within the detailed information, the enter button ↵ can be pressed again to activate an **action menu** with the following functions:

- Acknowledge message
- Delete message
- Acknowledge all
- Delete all

10.1.2 Diagnostics

The diagnostics function is activated by selecting the `Diagnostics` menu item. The ESC button (ESC) deactivates the diagnostics function and clears the contents of the recordings.

The recorded diagnostic data are displayed in 2 fields. In the upper half of the display, status messages of the AMS and the bar graph are displayed. The lower half contains information that assists in a Leuze-internal evaluation.

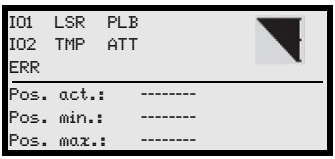

Use the up/down buttons (▲) (▼) to scroll in the bottom half between various displays. The contents of the scrollable pages are intended solely for Leuze for internal evaluation.

The diagnostics have no influence on the communication to the host interface and can be activated during operation of the AMS 338*i*.

10.1.3 Expanded diagnostics

The `Expanded diagnostics` menu item is used for Leuze-internal evaluation.

10.2 General causes of errors

LINK LED for BUS IN and BUS OUT

A green/yellow multicolor LED below the BUS IN and BUS OUT connectors indicates the EtherCAT connection status.

Green continuous light — **LINK LED green**

- The link exists, the hardware connection to the next connected participant is OK.

Flashing yellow — **LINK LED flashes yellow**

- Data is exchanged with the connected participants.

10.2.1 Power LED

See also chapter 8.2.2.

Error	Possible error cause	Measure
PWR LED "OFF"	No supply voltage connected	Check supply voltage.
	Hardware error	Send in device.
PWR-LED "flashes red"	Light beam interruption	Check alignment.
	Plausibility error	Traverse rate >10m/s.
PWR-LED "static red"	Hardware error	For error description, see display, It may be necessary to send in the device.

Table 10.1: General causes of errors

10.3 Interface errors

10.3.1 BUS LED

For further information on the LED status displays, see chapter 8.2.2 "LED status displays".

Error	Possible error cause	Measure
BUS LED "OFF"	Power off on AMS 338*i*	Check supply voltage.
BUS-LED "flashes red"	Invalid configuration	--
Bus LED "flashes green/ red"	Bus error Time out Process Data Watchdog Timeout	--

Table 10.2: Bus error

10.4 Status display in the display of the AMS 338*i*

Display	Possible error cause	Measure
PLB (implausible measurement values)	Laser beam interruption	Laser spot must always be incident on the reflector.
	Laser spot outside of reflector	Traverse rate < 10 m/s?
	Measurement range for maximum distance exceeded	Restrict traversing path or select AMS with larger measurement range.
	Velocity greater than 10 m/s	Reduce velocity.
	Ambient temperature far outside of the permissible range (TMP display; PLB)	Select AMS with heating or ensure cooling.
ATT (insufficient received signal level)	Reflector soiled	Clean reflector or glass lens.
	Glass lens of the AMS soiled	
	Performance reduction due to snow, rain, fog, condensing vapor, or heavily polluted air (oil mist, dust)	Optimize usage conditions.
	Laser spot only partially on the reflector	Check alignment.
	Protective foil on the reflector	Remove protective foil from reflector.
TMP (operating temperature outside of specification)	Ambient temperatures outside of the specified range	In case of low temperatures, remedy may be an AMS with heating. If temperatures are too high, provide cooling or change mounting location.
LSR Laser diode warning	Laser diode prefailure message	Send in device at next possible opportunity to have laser diode replaced. Have replacement device ready.
ERR Hardware error.	Indicates an uncorrectable error in the hardware	Send in device for repair.

Notice!

*Please use **chapter 10 as a master copy** should servicing be required.*
Cross the items in the "Measures" column which you have already examined, fill out the following address field and fax the pages together with your service contract to the fax number listed below.

Customer data (please complete)

Device type:	
Company:	
Contact partner / department:	
Phone (direct):	
Fax:	
Street / No:	
ZIP code/City:	
Country:	

Leuze Service fax number:

+49 7021 573 - 199

11 Type overview and accessories

11.1 Type key

AMS 3xx *i* yyy H

Heating option	H =	With heating
Sensing distance	40	Max. operating range in m
	120	Max. operating range in m
	200	Max. operating range in m
	300	Max. operating range in m
	i =	Integrated fieldbus technology
Interface	00	RS 422/RS 232
	01	RS 485
	04	PROFIBUS DP / SSI
	08	TCP/IP
	35	CANopen
	38	EtherCAT
	48	PROFINET RT
	55	DeviceNet
	58	Ethernet/IP
	84	Interbus
	AMS	**A**bsolute **M**easuring **S**ystem

11.1.1 Type overview AMS 338*i* (EtherCAT)

Type designation	Description	Part no.
AMS 338*i* 40	40 m operating range, EtherCAT interface	50113701
AMS 338*i* 120	120 m operating range, EtherCAT interface	50113702
AMS 338*i* 200	200 m operating range, EtherCAT interface	50113703
AMS 338*i* 300	300 m operating range, EtherCAT interface	50113704
AMS 338*i* 40 H	40 m operating range, EtherCAT interface, integrated heating	50113705
AMS 338*i* 120 H	120 m operating range, EtherCAT interface, integrated heating	50113706
AMS 338*i* 200 H	200 m operating range, EtherCAT interface, integrated heating	50113707
AMS 338*i* 300 H	300 m operating range, EtherCAT interface, integrated heating	50113708

Table 11.1: Type overview AMS 338*i*

11.2 Overview of reflector types

Type designation	Description	Part no.
Reflective tape 200x200-S	Reflective tape, 200x200mm, self-adhesive	50104361
Reflective tape 500x500-S	Reflective tape, 500x500mm, self-adhesive	50104362
Reflective tape 914x914-S	Reflective tape, 914x914mm, self-adhesive	50108988
Reflective tape 200x200-M	Reflective tape, 200x200mm, affixed to aluminum plate	50104364
Reflective tape 500x500-M	Reflective tape, 500x500mm, affixed to aluminum plate	50104365
Reflective tape 914x914-M	Reflective tape, 914x914mm, affixed to aluminum plate	50104366
Reflective tape 200x200-H	Heated reflective tape, 200 x 200mm	50115020
Reflective tape 500x500-H	Heated reflective tape, 500 x 500mm	50115021
Reflective tape 914x914-H	Heated reflective tape, 914 x 914mm	50115022

Table 11.2: Overview of reflector types

11.3 Accessories

11.3.1 Accessory mounting bracket

Type designation	Description	Part no.
MW OMS/AMS 01	Mounting bracket for mounting the AMS 338*i* to horizontal surfaces	50107255

Table 11.3: Accessory mounting bracket

11.3.2 Accessory deflector unit

Type designation	Description	Part no.
US AMS 01	Deflector unit with integrated mounting bracket for the AMS 338*i*. Variable 90° deflection of the laser beam in various directions	50104479
US 1 OMS	Deflector unit without mounting bracket for simple 90° deflection of the laser beam	50035630

Table 11.4: Accessory deflector unit

11.3.3 Accessory M12 connector

Type designation	Description	Part no.
S-M12A-ET	M12 connector, Ethernet, D-coded, BUS IN, BUS OUT	50112155
KDS ET M12/RJ45 W - 4P	Converter from M12 D-coded to RJ45 socket	50109832
KD 095-5A	M12 connector, A-coded socket, Power (PWR)	50020501

Table 11.5: Accessory M12 connector

11.3.4 Accessory ready-made cables for voltage supply

Contact assignment/wire color of PWR connection cable

PWR connection cable (5-pin socket, A-coded)			
PWR 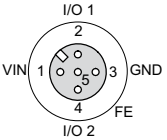 **M12 socket (A-coded)**	**Pin**	**Name**	**Core color**
	1	VIN	**brown**
	2	I/O 1	**white**
	3	GND	**blue**
	4	I/O 2	**black**
	5	FE	**gray**
	Thread	FE	**bare**

Specifications of the cables for voltage supply

Operating temperature range in rest state: -30°C … +70°C
in motion: -5°C … +70°C

Material sheathing: PVC

Bending radius > 50 mm

Order codes of the cables for voltage supply

Type designation	Description	Part no.
K-D M12A-5P-5m-PVC	M12 socket, A-coded, axial plug outlet, open cable end, cable length 5 m	50104557
K-D M12A-5P-10m-PVC	M12 socket, A-coded, axial plug outlet, open cable end, cable length 10 m	50104559

11.3.5 Accessory ready-made cables for EtherCAT

General

- Cable **KB ET…** for connecting to PROFINET via M12 connector
- Standard cable available in lengths from 2 … 30m
- Special cables on request.

Contact assignments M12 EtherCAT connection cable KB ET …-SA

M12 EtherCAT connection cable (4-pin connector, D-coded, on both sides)			
EtherNet 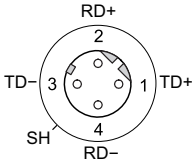 **M12 connector (D-coded)**	**Pin**	**Name**	**Core color**
	1	TD+	**yellow**
	2	RD+	**white**
	3	TD-	**orange**
	4	RD-	**blue**
	SH (thread)	FE	**bare**

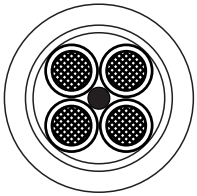

Core colors

WH
YE
BU
OG

Conductor class: VDE 0295, EN 60228, IEC 60228 (Class 5)

Accessories M12 EtherCAT connection cable, open cable end

Cable designation: KB ET - .... - SA

Accessories EtherCAT connection cable with both-sided D-coded M12 connector

Cable designation: KB ET - .... - SSA, cable assignment 1:1, not crossed

Accessory EtherCAT connection cable, M12-/RJ45

Cable designation: KB ET - .... - SA-RJ45

Notice for connecting the EtherCAT interface!

The entire connection cable must be shielded. The shielding connection must be at the same potential on both ends of the data line. This prevents potential compensating currents over the shield and possible interference coupling by compensating currents. The signal lines must be stranded in pairs.
Use CAT 5 cable for the connection.

Specifications of the EtherCAT connection cable

Operating temperature range in rest state: -50°C … +80°C
in motion: -25°C … +80°C
in motion: -25°C … +60°C (when used with drag chains)

Material cable sheath: PUR (green), wire insulation: PE foam, free of halogens, silicone and PVC

Bending radius > 65 mm, suitable for drag chains
Bending cycles > 10^6, perm. acceleration < 5 m/s^2

Order codes for EtherCAT connection cables

Type designation	Description	Part no.
M12 plug for BUS IN, axial connector, open cable end		
KB ET - 1000 - SA	Cable length 1 m	50106738
KB ET - 2000 - SA	Cable length 2 m	50106739
KB ET - 5000 - SA	Cable length 5 m	50106740
KB ET - 10000 - SA	Cable length 10 m	50106741
KB ET - 15000 - SA	Cable length 15 m	50106742
KB ET - 20000 - SA	Cable length 20 m	50106743
KB ET - 25000 - SA	Cable length 25 m	50106745
KB ET - 30000 - SA	Cable length 30 m	50106746
M12 plug for BUS IN to RJ-45 connector		
KB ET - 1000 - SA-RJ45	Cable length 1 m, cable 1:1, not crossed	50109879
KB ET - 2000 - SA-RJ45	Cable length 2 m, cable 1:1, not crossed	50109880
KB ET - 5000 - SA-RJ45	Cable length 5 m, cable 1:1, not crossed	50109881
KB ET - 10000 - SA-RJ45	Cable length 10 m, cable 1:1, not crossed	50109882
KB ET - 15000 - SA-RJ45	Cable length 15 m, cable 1:1, not crossed	50109883
KB ET - 20000 - SA-RJ45	Cable length 20 m, cable 1:1, not crossed	50109884
KB ET - 25000 - SA-RJ45	Cable length 25 m, cable 1:1, not crossed	50109885
KB ET - 30000 - SA-RJ45	Cable length 30 m, cable 1:1, not crossed	50109886
M12 plug + M12 plug for BUS OUT to BUS IN		
KB ET - 1000 - SSA	Cable length 1 m, cable 1:1, not crossed	50106898
KB ET - 2000 - SSA	Cable length 2 m, cable 1:1, not crossed	50106899
KB ET - 5000 - SSA	Cable length 5 m, cable 1:1, not crossed	50106900
KB ET - 10000 - SSA	Cable length 10 m, cable 1:1, not crossed	50106901
KB ET - 15000 - SSA	Cable length 15 m, cable 1:1, not crossed	50106902
KB ET - 20000 - SSA	Cable length 20 m, cable 1:1, not crossed	50106903
KB ET - 25000 - SSA	Cable length 25 m, cable 1:1, not crossed	50106904
KB ET - 30000 - SSA	Cable length 30 m, cable 1:1, not crossed	50106905

12 Maintenance

12.1 General maintenance information

With normal use, the laser measurement system does not require any maintenance by the operator.

Cleaning

In the event of dust build-up or if the (ATT) warning message is displayed, clean the device with a soft cloth; use a cleaning agent (commercially available glass cleaner) if necessary.

Also check the reflector for possible soiling.

Attention!

Do not use solvents and cleaning agents containing acetone. Use of such solvents could blur the reflector, the housing window and the display.

12.2 Repairs, servicing

Attention!

Access to or changes on the device, except where expressly described in this operating manual, are not authorized.
The device must not be opened. Failure to comply will render the guarantee void. Warranted features cannot be guaranteed after the device has been opened.

Repairs to the device must only be carried out by the manufacturer.

↳ *Contact your Leuze distributor or service organization should repairs be required. The addresses can be found on the inside of the cover and on the back.*

Notice!

When sending the laser measurement systems to Leuze electronic for repair, please provide an accurate description of the error.

12.3 Disassembling, packing, disposing

Repacking

For later reuse, the device is to be packed so that it is protected.

Notice!

Electrical scrap is a special waste product! Observe the locally applicable regulations regarding disposal of the product.

A
Accessories 84
Accessory deflector unit 85
Accessory M12 connector 85
Accessory mounting bracket 85
Accessory ready-made cables 86
Accuracy 13
Air humidity 14
Alignment 19

B
BUS LED 41

C
Cleaning 89
Connections
EtherCAT BUS IN 37
EtherCAT BUS OUT 38
PWR IN 37
Service 38
Control buttons 43
Control panel 39
Count direction 60

D
Declaration of conformity 4
Deflector unit
Maximum ranges 23
With integrated mounting bracket 23
Without mounting bracket 25
Deflector unit US 1 OMS
Dimensioned drawing 25
Deflector unit US AMS 01
Dimensioned drawing 24
Description of functions 5
Diagnostics 80
Dimensioned drawing of AMS 3xxi 15
Display 39

E
Electrical connection 36
Safety notices 36
EtherCAT
Cable lengths and shielding 52
Wiring 52
EtherCAT topology 51
Expanded diagnostics 81
Explanation of symbols 4

F
Fast commissioning 11

G
General causes of errors 81

H
Heated reflectors
Dimensioned drawing 30
Specifications 29

I
Installation 17
Interface errors 82
Interface info in display 40
Internal hardware error 40

L
LED LINK 42
LSR status display 83

M
Main menu
Device information 44
Language selection 44
Network information 44
Parameter 44
Service 44
Maintenance 89
Measurement range 13
Measurement value output 13
Menus
Language selection menu 48
Main menu 44
Parameter menu 45
Service menu 49
Mounting 18
with laser beam deflector unit 23
Mounting bracket(optional) 20
Mounting distances 21

N

Name plates 17

O

Operating principle 11
Operating temperature 14
Operation 39, 49
Overview of reflector types 85

P

Packaging 17
Parameter enabling 49, 50
Parameter menu
  EtherCAT 45
  I/O 47
  Maximum position value 46
  Other 48
  Parameter handling 45
Plausibility error 40
Prefailure message 40
PROFINET interface 51
PWR LED 41

Q

Quality assurance 4

R

Received signal 40
Reflective tape
  Dimensioned drawing 28
  Specifications 27
Reflector 26
  Mounting 32
  Pitch 35
  Size 31
  Type overview 31
Repair 89

S

Sensing distance 84
Servicing 89
Specifications 13
  Dimensioned drawing 15
  General specifications 13
  Reflective tapes 26
Status and measurement data - main menu 44
Status- and warning messages 39
Status display 39
  ATT 83
  ERR 83
  PLB 83
  TMP 83
Status display in the display 83
Status displays 41
Status messages 80
Storage 17
Storage temperature 14
Supply voltage 13
Surface reflections 33
Symbols 4

T

Temperature monitoring 40
Transport 17
Troubleshooting 80
Type overview 16, 84

Level 1 ▲▼ : selection	Level 2 ▲▼ : selection ESC : back	Level 3 ▲▼ : selection ESC : back	Level 4 ▲▼ : selection ESC : back	Level 5 ▲▼ : selection ESC : back	Selection/configuration option ▲▼ : selection ↵ : activate ESC : back	Detailed information on
Device information						page 42
Network information						page 42
Status- and measurement data						page 42
Parameter ↵	Parameter handling	↵ Parameter enabling			ON / OFF	page 43
		↵ Password	↵ Activate password		ON / OFF	
			↵ Password entry		Configuration option of a four-digit numerical password	
		↵ Parameters to default			All parameters are reset to their factory settings	
	↵ EtherCAT	↵ Activation			ON / OFF	page 42
		↵ Address (station alias)				
	↵ Maximum position value	↵ Measurement unit			Metric/Inch	page 44
		↵ Count direction			Positive/Negative	
		↵ Offset			Value input:	
		↵ Preset			Value input	
		↵ Error delay			ON / OFF	
		↵ Position value in the case of error			Last valid value / zero	
		↵ Free resolution value			5 …50000	
	↵ I/O	↵ I/O 1	↵ Port configuration		Input/Output	page 45
			↵ Switching input	↵ Function	No function/preset teach/laser ON/OFF	
				↵ Activation	Low active/High active	
			↵ Switching output	↵ Function	Pos. limit value 1 / Pos. limit value 2 / Velocity / Intensity (ATT) / Temp. (TMP) / Laser (LSR) / Plausibility (PLB) / Hardware (ERR)	
				↵ Activation	Low active/High active	
		↵ I/O 2	↵ Port configuration		Input/Output	
			↵ Switching input	↵ Function	No function/preset teach/laser ON/OFF	
				↵ Activation	Low active/High active	
			↵ Switching output	↵ Function	Pos. limit value 1 / Pos. limit value 2 / Velocity / Intensity (ATT) / Temp. (TMP) / Laser (LSR) / Plausibility (PLB) / Hardware (ERR)	
				↵ Activation	Low active/High active	
		↵ Limit values	↵ Upper pos. limit 1	↵ Activation	ON / OFF	
				↵ Limit value input	Value input in mm or inch/100	
			↵ Lower pos. limit 1	↵ Activation	ON / OFF	
				↵ Limit value input	Value input in mm or inch/100	
			↵ Upper pos. limit 2	↵ Activation	ON / OFF	
				↵ Limit value input	Value input in mm or inch/100	
			↵ Lower pos. limit 2	↵ Activation	ON / OFF	
				↵ Limit value input	Value input in mm or inch/100	

		Other	Heating control			Standard/extended (10°C … 15°C/30°C … 35°C)	page 46
			Display background			10 minutes/ON	
			Display contrast			Weak/Medium/Strong	
			Service RS232	Baud rate		57.6 kbit/s / 115.2 kbit/s	
				Format		8,e,1 / 8,n,1	
Language selection						Deutsch / English / Español / Français / Italiano	page 46
Service		Status messages				Number of readings, reading gates, reading rate / non-reading rate etc.	page 47
		Diagnostics				Exclusively for service purposes by Leuze electronic	
		Expanded diagnostics				Exclusively for service purposes by Leuze electronic	