Technical data sheet
Safety laser scanner
Part no.: 53800263
RSL420-S/CU416-50

Figure can vary

Contents

- Technical data
- Dimensioned drawings
- Electrical connection
- Operation and display
- Notes
- Accessories

ПРОМЭЛЕКТРОНИКА / sales@prom-elec.com

Technical data

Basic data

Series	RSL 400
Application	Mobile danger zone guarding
	Mobile side guarding
	Stationary access guarding
	Stationary danger zone guarding

Functions

Functions	Dynamic contactor monitoring (EDM), selectable
	E-stop linkage
	Four-field mode
	Resolution, selectable

Characteristic parameters

Type	3, IEC/EN 61496
SIL	2, IEC 61508
SILCL	2, IEC/EN 62061
Performance Level (PL)	d, EN ISO 13849-1
PFH_D	9E-08 per hour
Mission time T_M	20 years, EN ISO 13849-1
Category	3, EN ISO 13849

Protective field data

Scanning angle	270 °
Minimum adjustable range	50 mm
Number of field pairs, reversible	10
Number of quads, reversible	10
Number of protective functions	1 Piece(s)
Number of independent sensor configurations	1
Diffuse reflection, min.	1.8 %
Operating range	0 ... 3 m

Warning field data

Number of field pairs	10
Operating range	0 ... 20 m
Object size	150 mm x 150 mm
Diffuse reflection, min.	10 %

Optical data

Light source	Laser, Infrared
Laser light wavelength	905 nm
Laser class	1, IEC/EN 60825-1:2007
Transmitted-signal shape	Pulsed
Repetition frequency	90 kHz

Measurement data

Distance resolution	1 mm
Detection range	0 ... 50 m
Diffuse reflection	20 %
Angular resolution	0.1 °

Electrical data

Protective circuit	Overvoltage protection

Performance data

Supply voltage U_B	24 V, DC, -30 ... 20 %
Current consumption (without load), max.	700 mA, (use power supply unit with 3 A)
Power consumption, max.	17 W, For 24 V, plus output load

Outputs

Number of safety-related switching outputs (OSSDs)	2 Piece(s)

Safety-related switching outputs

Type	Safety-related switching output OSSD
Switching voltage high, min.	20.8 V
Switching voltage low, max.	2 V
Voltage type	DC

Safety-related switching output 1

Assignment	Connection 1, gray wire
Switching element	Transistor, PNP

Safety-related switching output 2

Assignment	Connection 1, pink wire
Switching element	Transistor, PNP

Service interface

Type	Bluetooth, USB

Bluetooth

Function	Configuration/parametering
Frequency band	2,400 ... 2,483.5 MHz
Radiated transmitting power	Max. 4.5 dBm (2.82 mW), class 2

USB

Function	Configuration/parametering
Connection	USB 2.0 mini-B, socket
Transmission speed, max.	12 Mbit/s
Cable length	≤ 5m Longer cable lengths are possible using active cables.

Connection

Number of connections	2 Piece(s)

Connection 1

Function	Machine interface
Type of connection	Cable
Cable length	50,000 mm
Sheathing material	PVC
Cable color	Black
Number of conductors	16 -wire
Wire cross section supply	1 mm²
Wire cross section signals	0.14 mm²

Connection 2

Function	Data interface
Type of connection	Connector
Thread size	M12
Type	Female
Material	Metal
No. of pins	4 -pin
Encoding	D-coded

Technical data

Cable properties

Cable resistance, max.	15 Ω

Mechanical data

Dimension (W x H x L)	140 mm x 149 mm x 140 mm
Housing material	Metal
	Plastic
Metal housing	Diecast zinc
Lens cover material	Plastic/PC
Net weight	3,000 g
Housing color	Yellow, RAL 1021
Type of fastening	Mounting plate
	Through-hole mounting
	Via optional mounting device

Operation and display

Type of display	Alphanumerical display
	LED indicator
Number of LEDs	3 Piece(s)
Type of configuration	Software Sensor Studio
Operational controls	Software Sensor Studio

Environmental data

Ambient temperature, operation	0 ... 50 °C
Ambient temperature, storage	-20 ... 60 °C
Relative humidity (non-condensing)	15 ... 95 %

Certifications

Degree of protection	IP 65
Protection class	III, EN 61140
Certifications	c TÜV Süd US
	c UL US
	TÜV Süd
Test procedure for EMC in accordance with standard	DIN 40839-1/3
	EN 61496-1
Test procedure for oscillation in accordance with standard	EN 60068-2-6
Test procedure for continuous shock in accordance with standard	IEC 60068-2-29
US patents	US 10,304,307B
	US 7,656,917 B
	US 7,696,468 B
	US 8,520,221 B

Classification

Customs tariff number	85365019
eCl@ss 5.1.4	27272705
eCl@ss 8.0	27272705
eCl@ss 9.0	27272705
eCl@ss 10.0	27272705
eCl@ss 11.0	27272705
ETIM 5.0	EC002550
ETIM 6.0	EC002550
ETIM 7.0	EC002550

Dimensioned drawings

All dimensions in millimeters

Dimensions safety laser scanner with connection unit

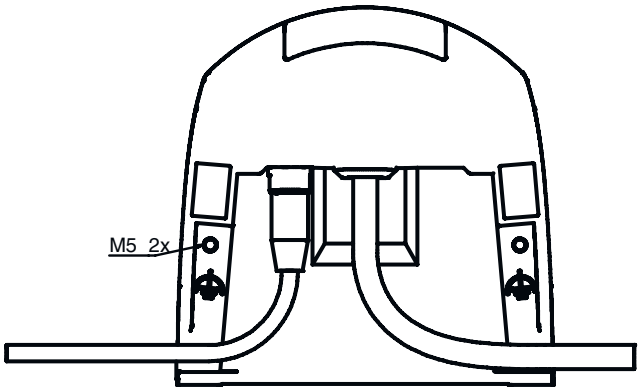

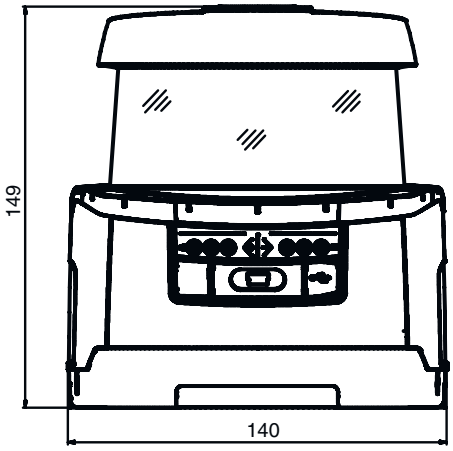

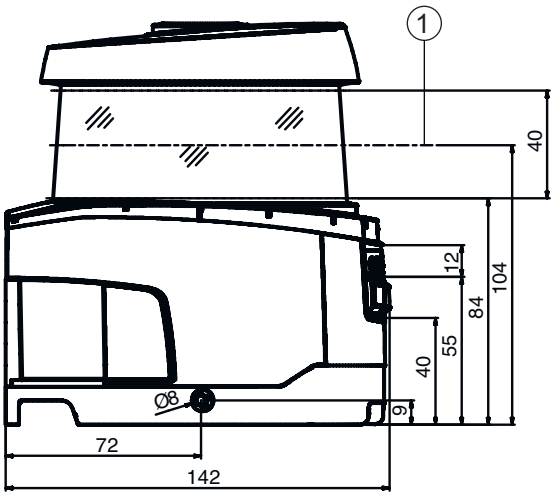

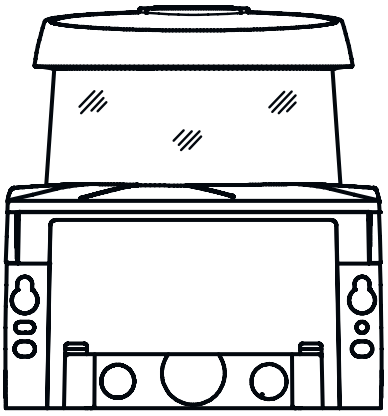

1 Scan level

Dimensioned drawings

Mounting dimensions safety laser scanner with connection unit

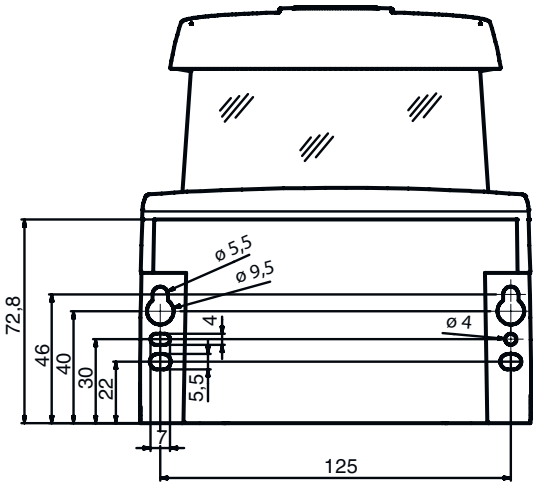

Minimum space requirements for installation and replacement of scanner unit

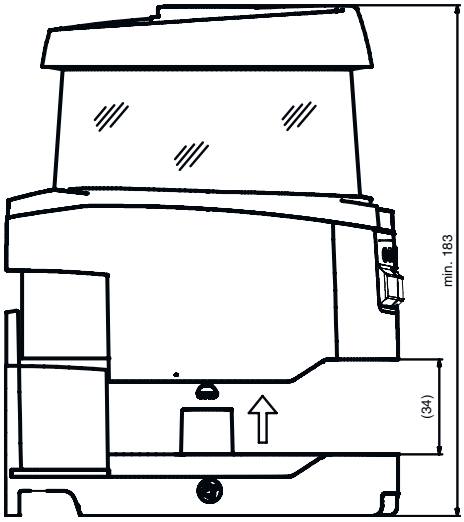

Dimensioned drawings

Minimum space requirements for installation and replacement of scanner unit

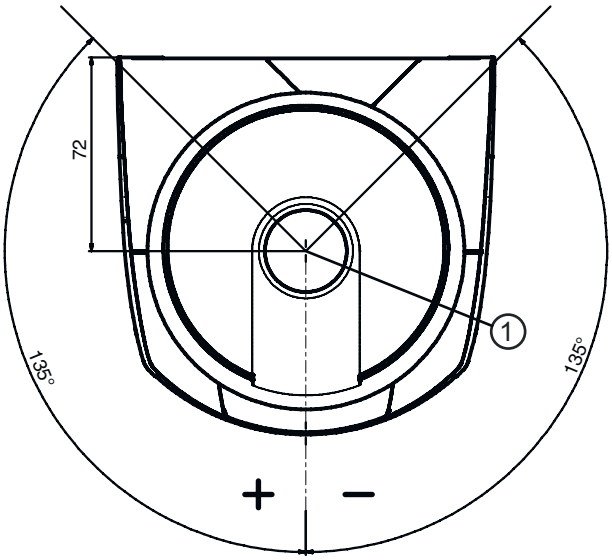

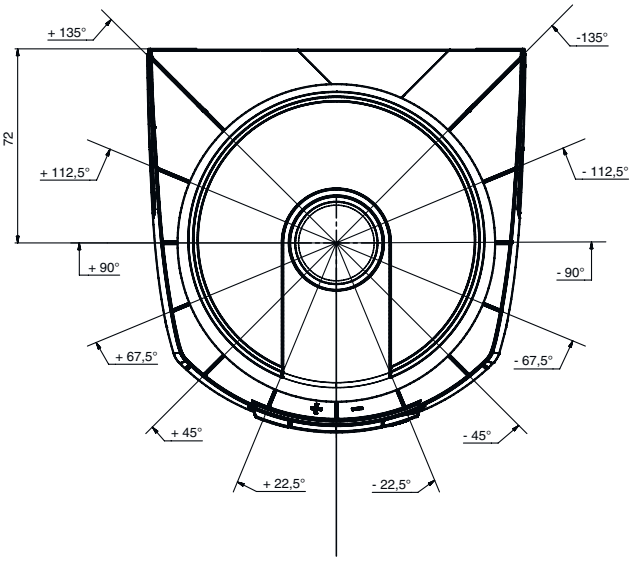

1 Reference point for distance measurement and protective field radius

Electrical connection

Connection 1

Function	Machine interface
Type of connection	Cable
Cable length	50,000 mm
Sheathing material	PVC
Cable color	Black
Number of conductors	16 -wire
Wire cross section supply	1 mm²
Wire cross section signals	0.14 mm²

Conductor color	Conductor assignment
White	RES1
Brown	+24V
Green	EA1
Yellow	A1
Gray	OSSDA1
Pink	OSSDA2
Blue	GND / Ground
Red	MELD
Black	F1
Violet	F2
GrayPink	F3
BlueRed	F4
GreenWhite	F5
BrownGreen	SE1
WhiteYellow	SE2
BrownYellow	A2

Electrical connection

Connection 2

Function	Data interface
Type of connection	Connector
Thread size	M12
Type	Female
Material	Metal
No. of pins	4 -pin
Encoding	D-coded
Connector housing	FE/SHIELD

Pin	Pin assignment	Conductor color
1	TD+	Yellow
2	RD+	White
3	TD-	Orange
4	RD-	Blue
5		

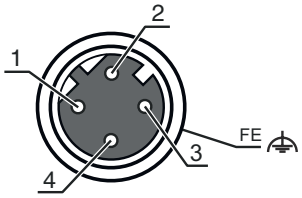

Operation and display

LED	Display	Meaning
1	Off	Device switched off
	Red, continuous light	OSSD off
	Red, flashing	Error
	Green, continuous light	OSSD on
2	Off	RES deactivated or RES activated and released
	Yellow, flashing	Protective field occupied
	Yellow, continuous light	RES activated and blocked but ready to be unlocked - protective field free and linked sensor is enabled if applicable
3	Off	Free warning field
	Blue, continuous light	Warning field interrupted
4	Off	Four field mode: warning field 3 free
	Blue, continuous light	Four field mode: warning field 3 interrupted
5	Yellow, flashing	Four field mode: warning field 2 interrupted

Notes

Observe intended use!

- The product may only be put into operation by competent persons.
- Only use the product in accordance with its intended use.

WARNING! INVISIBLE LASER RADIATION – CLASS 1 LASER PRODUCT

The device satisfies the requirements of IEC 60825-1:2014 (EN 60825-1:2014) safety regulations for a product of **laser class 1 as well as the U.S. 21 CFR 1040.10 regulations with deviations corresponding to "Laser Notice No. 56" from May 8, 2019.**

- Observe the applicable statutory and local laser protection regulations.
- The device must not be tampered with and must not be changed in any way.
  There are no user-serviceable parts inside the device.
  Repairs must only be performed by Leuze electronic GmbH + Co. KG.

Accessories

Connection technology - Interconnection cables

	Part no.	Designation	Article	Description
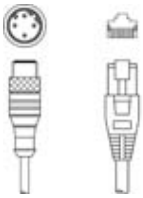	50135081	KSS ET-M12-4A-RJ45-A-P7-050	Interconnection cable	Suitable for interface: Ethernet Connection 1: Connector, M12, Axial, Male, D-coded, 4 -pin Connection 2: RJ45 Shielded: Yes Cable length: 5,000 mm Sheathing material: PUR
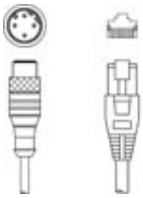	50135082	KSS ET-M12-4A-RJ45-A-P7-100	Interconnection cable	Suitable for interface: Ethernet Connection 1: Connector, M12, Axial, Male, D-coded, 4 -pin Connection 2: RJ45 Shielded: Yes Cable length: 10,000 mm Sheathing material: PUR
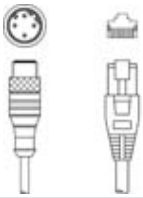	50135083	KSS ET-M12-4A-RJ45-A-P7-150	Interconnection cable	Suitable for interface: Ethernet Connection 1: Connector, M12, Axial, Male, D-coded, 4 -pin Connection 2: RJ45 Shielded: Yes Cable length: 15,000 mm Sheathing material: PUR

Mounting technology - Mounting brackets

	Part no.	Designation	Article	Description
	53800134	BT840M	Mounting bracket	Application: Mounting on chamfered 90° corner Dimensions: 84.9 mm x 72 mm x 205.2 mm Color: Yellow, RAL 1021 Type of fastening, at system: Through-hole mounting Type of fastening, at device: Screw type Material: Metal
	53800132	BTF815M	Mounting bracket	Application: Mounting bracket for floor mounting Dimensions: 186 mm x 120 mm x 288 mm Scan level height: 150 mm Color: Yellow, RAL 1021 Type of fastening, at system: Through-hole mounting Type of fastening, at device: Screw type Material: Metal
	53800133	BTF830M	Mounting bracket	Application: Mounting bracket for floor mounting Dimensions: 186 mm x 275 mm x 288 mm Scan level height: 300 mm Color: Yellow, RAL 1021 Type of fastening, at system: Through-hole mounting Type of fastening, at device: Screw type Material: Metal

Mounting

	Part no.	Designation	Article	Description
	53800131	BTP800M	Loop guard	Dimensions: 160 mm x 169 mm Color: Black Material: Metal

Accessories

General

	Part no.	Designation	Article	Description
	430400	RS4-clean-Set1	Cleaning set	Number of cleaning cloths: 40 Piece(s) Content of cleaning fluid: 150 ml

Services

	Part no.	Designation	Article	Description
	S981051	CS40-I-141	Safety inspection "Safety laser scanners"	Details: Checking of a safety laser scanner application in accordance with current standards and guidelines. Inclusion of the device and machine data in a database, production of a test log per application. Conditions: It must be possible to stop the machine, support provided by customer's employees and access to the machine for Leuze employees must be ensured. Restrictions: Travel costs and accommodation expenses charged separately and according to expenditure.
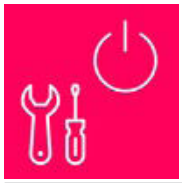	S981047	CS40-S-141	Start-up support	Details: For safety devices including stopping time measurement and initial inspection. Conditions: Devices and connection cables are already mounted, price not including travel costs and, if applicable, accommodation expenses. Restrictions: Max. 3 h., no mechanical (mounting) and electrical (wiring) work performed, no changes (attachments, wiring, programming) to third-party components in the nearby environment.

Note	
	A list with all available accessories can be found on the Leuze website in the Download tab of the article detailed page.