Leuze

Original operating instructions

BCL 208i
Bar code reader

The Sensor People

We reserve the right to make technical changes
EN • 2020-09-23 • 50144269

ПРОМЭЛЕКТРОНИКА / sales@prom-elec.com

© 2021
Leuze electronic GmbH + Co. KG
In der Braike 1
73277 Owen / Germany
Phone: +49 7021 573-0
Fax: +49 7021 573-199
www.leuze.com
info@leuze.com

1 About this document ... 5

2 Safety ... 7

2.1 Intended use ... 7
2.2 Foreseeable misuse ... 7
2.3 Competent persons ... 8
2.4 Disclaimer ... 8
2.5 Laser safety notices ... 8

3 Fast commissioning ... 9

3.1 Mounting ... 9
3.2 Selecting a mounting location ... 9
3.3 Electrical connection ... 9
3.4 Preparatory settings ... 10
3.4.1 Manually setting the IP address ... 10
3.4.2 Automatically setting the IP address ... 11
3.4.3 Ethernet host communication ... 11
3.5 Further settings ... 12
3.6 Starting the device ... 12
3.7 Bar code reading ... 13

4 Device description ... 14

4.1 Device overview ... 14
4.2 Performance characteristics ... 14
4.3 Device construction ... 16
4.4 Display elements ... 16
4.5 Reading techniques ... 18
4.5.1 Line scanner (single line) ... 18
4.5.2 Raster scanner (raster line) ... 19
4.6 Fieldbus systems ... 19
4.6.1 Ethernet ... 19
4.6.2 Ethernet – star topology ... 20
4.7 autoReflAct ... 20
4.8 Reference codes ... 21
4.9 autoConfig ... 21

5 Mounting ... 22

5.1 Transport and storage ... 22
5.2 Mounting ... 22
5.2.1 Mounting with M4 fastening screws ... 22
5.2.2 Mounting with BT 56 or BT 56-1 mounting device ... 22
5.2.3 Mounting with BT 300-1 mounting device ... 23
5.2.4 Mounting with the BT 300 W mounting bracket ... 23
5.3 Selecting a mounting location ... 23
5.4 Cleaning ... 25

6 Electrical connection ... 26

6.1 PWR/SWIO (supply voltage, switching input and switching output) ... 27
6.2 HOST (Ethernet, cable assignments) ... 29
6.3 Ethernet topologies ... 31
6.4 Cable lengths and shielding ... 31

7 Starting up the device – Leuze webConfig tool ... 32

7.1 System requirements ... 32

7.2 Start webConfig tool ... 32

7.3 Short description of the webConfig tool ... 33

7.3.1 CONFIGURATION menu ... 34

8 Starting up the device - Configuration ... 35

8.1 Starting the device ... 35

8.2 Setting configuration parameters ... 35

8.2.1 Manually setting the IP address ... 35

8.2.2 Automatically setting the IP address ... 36

8.2.3 Ethernet host communication ... 36

8.2.4 Address Link Label ... 37

8.3 Performing further settings ... 38

8.3.1 Decoding and processing the read data ... 38

8.3.2 Control of the decoding ... 39

8.3.3 Control of the switching output ... 39

8.3.4 Transfer configuration data ... 40

9 Online commands ... 41

9.1 Overview of commands and parameters ... 41

9.2 General online commands ... 41

9.3 Online commands for system control ... 47

9.4 Online commands for configuration of switching inputs/outputs ... 48

9.5 Online commands for the parameter set operations ... 49

10 Care, maintenance and disposal ... 54

11 Diagnostics and troubleshooting ... 55

11.1 Error signaling via LED ... 55

11.2 Interface error ... 55

12 Service and support ... 56

13 Technical data ... 57

13.1 General specifications ... 57

13.2 Reading fields ... 59

13.2.1 Bar code characteristics ... 59

13.2.2 Raster scanner ... 59

13.2.3 Reading field curves ... 60

13.3 Dimensioned drawings ... 62

14 Order guide and accessories ... 63

14.1 Part number code ... 63

14.2 Type overview ... 63

14.3 Accessories – connection technology ... 63

14.4 Accessories – mounting systems ... 64

14.5 Accessories – Reflectors and reflective tapes ... 64

15 EC Declaration of Conformity ... 65

16 Appendix ... 66

16.1 ASCII character set ... 66

16.2 Bar code sample ... 70

1 About this document

Used symbols and signal words

Tab. 1.1: Warning symbols and signal words

	Symbol indicating dangers to persons
	Symbol indicating possible property damage
NOTE	Signal word for property damage Indicates dangers that may result in property damage if the measures for danger avoidance are not followed.
CAUTION	Signal word for minor injuries Indicates dangers that may result in minor injury if the measures for danger avoidance are not followed.
WARNING	Signal word for serious injury Indicates dangers that may result in severe or fatal injury if the measures for danger avoidance are not followed.
DANGER	Signal word for life-threatening danger Indicates dangers with which serious or fatal injury is imminent if the measures for danger avoidance are not followed.

Tab. 1.2: Other symbols

	Symbol for tips Text passages with this symbol provide you with further information.
	Symbol for action steps Text passages with this symbol instruct you to perform actions.
⇨	Symbol for action results Text passages with this symbol describe the result of the preceding action.

Terms and abbreviations

Tab. 1.3: Terms and abbreviations

AutoConfig	Function for easily configuring a code type or number of digits
AutoReflAct	Function for activation without additional sensors (Automatic Reflector Activation)
BCL	Bar code reader
CRT	Code reconstruction technology
EMC	Electromagnetic compatibility
EN	European standard
FE	Functional earth
IP address	Network address, which is based on the Internet Protocol (IP)
MAC address	Media Access Control Address; hardware address of a device in the network
PELV	Protective Extra-Low Voltage; protective extra-low voltage with reliable disconnection
PLC	Programmable Logic Controller
SWI1	Digital switching input (Switching Input)
SWO2	Digital switching output (Switching Output)
TCP/IP	Transmission Control Protocol/Internet Protocol; Internet protocol family
UDP	Network data protocol (User Datagram Protocol)
UL	Underwriters Laboratories

2 Safety

The bar code readers of the BCL 200i series were developed, manufactured and tested in accordance with the applicable safety standards. They correspond to the state of the art.

2.1 Intended use

Bar code readers of the BCL 200i series are conceived as stationary, high-speed scanners with integrated decoders for all current bar codes used for automatic object detection.

Areas of application

The bar code readers of the BCL 200i series are especially designed for the following areas of application:

- Storage and conveying technologies, in particular for object identification on fast-moving conveyor belts
- Pallet transport systems
- Automobile sector

CAUTION

Observe intended use!

The protection of personnel and the device cannot be guaranteed if the device is operated in a manner not complying with its intended use.

- Only operate the device in accordance with its intended use.
- Leuze electronic GmbH + Co. KG is not liable for damages caused by improper use.
- Read these operating instructions before commissioning the device. Knowledge of the operating instructions is an element of proper use.

NOTICE

Comply with conditions and regulations!

- Observe the locally applicable legal regulations and the rules of the employer's liability insurance association.

2.2 Foreseeable misuse

Any use other than that defined under "Intended use" or which goes beyond that use is considered improper use.

In particular, use of the device is not permitted in the following cases:

- in rooms with explosive atmospheres
- in circuits which are relevant to safety
- for medical purposes

NOTICE

Do not modify or otherwise interfere with the device!

- Do not carry out modifications or otherwise interfere with the device. The device must not be tampered with and must not be changed in any way.
- The device must not be opened. There are no user-serviceable parts inside.
- Repairs must only be performed by Leuze electronic GmbH + Co. KG.

2.3 Competent persons

Connection, mounting, commissioning and adjustment of the device must only be carried out by competent persons.

Prerequisites for competent persons:

- They have a suitable technical education.
- They are familiar with the rules and regulations for occupational safety and safety at work.
- They are familiar with the operating instructions for the device.
- They have been instructed by the responsible person on the mounting and operation of the device.

Certified electricians

Electrical work must be carried out by a certified electrician.

Due to their technical training, knowledge and experience as well as their familiarity with relevant standards and regulations, certified electricians are able to perform work on electrical systems and independently detect possible dangers.

In Germany, certified electricians must fulfill the requirements of accident-prevention regulations DGUV (German Social Accident Insurance) provision 3 (e.g. electrician foreman). In other countries, there are respective regulations that must be observed.

2.4 Disclaimer

Leuze electronic GmbH + Co. KG is not liable in the following cases:

- The device is not being used properly.
- Reasonably foreseeable misuse is not taken into account.
- Mounting and electrical connection are not properly performed.
- Changes (e.g., constructional) are made to the device.

2.5 Laser safety notices

ATTENTION	
	LASER RADIATION – CLASS 1 LASER PRODUCT The device satisfies the requirements of IEC/EN 60825-1:2014 safety regulations for a product of **laser class 1** and complies with 21 CFR 1040.10 except for conformance with IEC 60825-1 Ed. 3., as described in Laser Notice No. 56, dated May 8, 2019. ↳ Observe the applicable statutory and local laser protection regulations. ↳ The device must not be tampered with and must not be changed in any way. There are no user-serviceable parts inside the device. Repairs must only be performed by Leuze electronic GmbH + Co. KG.

CAUTION	
	Laser radiation Opening the device can lead to dangerous exposure to radiation.

3 Fast commissioning

Below you will find a short description for the initial commissioning of the BCL 208i. Detailed explanations for all listed points can be found throughout these operating instructions.

3.1 Mounting

The bar code reader can be mounted in the following ways:

- Mounting with four M4x5 screws on the rear side of the housing.
- Mounting with mounting devices on the fastening groove on one side of the housing.

3.2 Selecting a mounting location

In order to select the right mounting location, several factors must be considered:

- Size, orientation, and position tolerance of the bar codes on the objects to be scanned.
- The reading field of the bar code reader in relation to the bar code module width.
- The resulting minimum and maximum reading distance from the respective reading field with the respective module width (see chapter 13.2 "Reading fields").
- alignment of the bar code reader for avoiding reflections.
- Distance between bar code reader and host system with respect to the interface.
- The correct time for data output. The bar code reader should be positioned in such a way that, taking into consideration the time required for data processing and the conveyor belt speed, there is sufficient time to e.g. initiate sorting operations on the basis of the read data.
- The display elements such as LEDs should be highly visible.
- For configuring and commissioning with the webConfig tool, the HOST interface should be easily accessible.

For further information, see see chapter 5 "Mounting" and see chapter 6 "Electrical connection".

The best read results are obtained if the following prerequisites are fulfilled:

- The reading distance lies in the middle area of the reading field.
- There is no direct sunlight and protect against ambient light effects.
- The bar code labels are of good print quality and have good contrast ratios.
- You are not using high-glossy labels.
- The bar code is moved past with an angle of inclination of ±10° … 15° to vertical.

	NOTICE
	Avoid direct reflection of the laser beam! The beam on the bar code reader is emitted at 105° to the housing base. An angle of incidence of 15° of the laser to the label has already been integrated in the deflecting mirror so that the bar code reader can be installed parallel to the bar code (rear housing wall).

3.3 Electrical connection

The bar code reader is equipped with two connection cables, each with an M12 connector.

- PWR/SWIO: M12 connection for supply voltage and switching input/output, 5-pin, A-coded, cable length 0.9 m (unshielded)
- HOST: M12 connection for Ethernet, 4-pin, D-coded, cable length 0.7 m (shielded)

1 PWR/SWIO, M12 connector, 5-pin, A-coded
2 HOST, M12 socket, 4-pin, D-coded

Fig. 3.1: Electrical connections

NOTICE
The shielding is connected using the M12 connector of the Ethernet cable.

Details on the connectors see chapter 6 "Electrical connection".

3.4 Preparatory settings

- ↳ Connect the +18 … 30 V DC supply voltage (typically +24 V DC).
- ⇨ The bar code reader starts up.

First, you must now set the communication parameters of the BCL 208i. Make the necessary settings via the webConfig tool, see chapter 8 "Starting up the device - Configuration".

3.4.1 Manually setting the IP address

Set the IP manually if your system does not include a DHCP server or if the IP addresses of the devices are to be set permanently.

- ↳ Have the network administrator specify the data for IP address, net mask and gateway address of the BCL 208i.
- ↳ Set the values on the BCL 208i.

In the webConfig tool:

Configuration > Communication > Ethernet interface

NOTICE
↳ After making the setting via the webConfig tool, restart the BCL 208i. ⇨ The set IP address is only accepted and active after a restart.

3.4.2 Automatically setting the IP address

Set the IP address automatically if a DHCP server assigns the IP addresses in the system.

↳ Activate the DHCP Client mode in the BCL 208i.

In the webConfig tool:

Configuration > Communication > Ethernet interface

↳ Activate the *DHCP* = *ON* setting there.

3.4.3 Ethernet host communication

You can configure the connections to an external host system via the Ethernet host communication.

You can use both the UDP protocol as well as the TCP/IP protocol – in either client or in server mode. Both protocols can be activated simultaneously and used in parallel.

- The connection-free UDP protocol is used primarily to transfer process data to the host (monitor operation).
- The connection-oriented TCP/IP protocol can also be used to transfer commands from the host to the device. With this connection, the data is backed up by the TCP/IP protocol itself.
- If you would like to use the TCP/IP protocol, you must also define whether the device is to operate as a TCP client or as a TCP server.

UDP

The device requires from the user the IP address and the port number of the communication partner. In the same way, the host system (PC/control) also requires the set IP address of the device and the selected port number. By assigning these parameters, a socket is formed via which the data can be sent and received.

↳ Activate the UDP protocol.

↳ Set the following values:

⇨ IP address of the communication partner

⇨ Port number of the communication partner

The corresponding adjustment options can be found in the webConfig tool:
Configuration > Control > Host > Ethernet > UDP

TCP/IP

↳ Activate the TCP/IP protocol.

↳ Set the TCP/IP mode of the device.

⇨ In TCP client mode, the device actively establishes the connection to the superior host system, e.g., PC/control as server. The device requires from the user the IP address of the server (host system) and the port number on which the server (host system) accepts a connection. In this case, the device determines when and with whom a connection is established.

⇨ In TCP server mode, the superior host system (PC/control) actively establishes the connection and the connected device waits for the connection to be set up.
The TCP/IP stack must be informed by the user as to the local port of the device (port number) on which connection requests from a client application (host system) are to be received.
If there is a connection request and a connection is established by the superior host system (PC/control as client), the device – in server mode – accepts the connection. Data can then be sent and received.

↳ With a device as TCP client, set the following values:

⇨ IP address of the TCP server, normally the IP address of the control or the host computer

⇨ Port number of the TCP server

⇨ Timeout for the wait time for an answer from the server

⇨ Repetition time for renewed communication attempt following a timeout

↳ With a device as TCP server, set the following values:

⇨ Port number for the communication of the device with the TCP clients

The corresponding adjustment options can be found in the webConfig tool:
Configuration > Control > Host > Ethernet > TCP/IP

3.5 Further settings

Carry out further settings, such as the control of the decoding and processing of the read data and the configuration of the connected switching inputs and outputs.

Decoding and processing the read data

↳ Define at least one code type with the desired settings.

In the webConfig tool:

Configuration > Decoder

Control of the decoding

Configure the connected switching input according to your requirements.

↳ Configure the switching behavior.

In the webConfig tool:

Configuration > Device > Switching inputs/outputs

Control of the switching output

Configure the connected switching output according to your requirements.

↳ Configure the switching behavior.

In the webConfig tool:

Configuration > Device > Switching inputs/outputs

3.6 Starting the device

↳ Connect the +18 … 30 V DC supply voltage (typically +24 V DC).

⇨ The BCL 208i starts up, the PWR, NET and LINK LEDs indicate the operating state.

Tab. 3.1: Display of operating state

LED	Color	State	Description
PWR	Green	Flashing	Device ok, initialization
		Continuous light	Power On, device OK
		Briefly off - on	Good read, reading successful
	Green - red	Green off – briefly red – green on	No Read, reading not successful
	Yellow	Continuous light	Service mode
	Red	Flashing	Warning
		Continuous light	Error, device error
NET	Green	Flashing	Initialization
		Continuous light	Network mode ok
	Red	Flashing	Communication error
		Continuous light	Network error
LINK	Green	Continuous light	Ethernet connected (LINK)
	Yellow	Flashing	Data communication (ACT)

During the initialization phase (power on), the laser is switched on for approx. 2 seconds. A configuration code can be read in during this time.

	NOTICE
	Setting the IP address to the Leuze default address By reading in the configuration code during the initialization phase, the IP address and the subnet mask are set to the Leuze default. IP address: 192.168.60.101 Subnet mask: 255.255.255.0

192.168.060.101

Operating the bar code reader

After connecting a supply voltage of +18 … 30 V DC to the switching input, a read process is activated. In the standard setting, all common code types for decoding are released. Only the 2/5 Interleaved code type is limited to 10 digits of code content.

If a code is moved through the reading field, the code content is decoded and forwarded to the superior system (PLC/PC) via Ethernet.

3.7 Bar code reading

↳ Test the device with the following bar code in format 2/5 Interleaved. The bar code module here is 0.5.

Modul 0,5

6677889900

The PWR LED goes off briefly and then turns green again. Simultaneously, the read information is forwarded to the superior system (PLC/PC) via the Ethernet.

↳ Check the incoming data of the bar code information.

Alternatively, you can use a switching input for read activation (switching signal of a photoelectric sensor or 24 V DC switching signal).

4 Device description

4.1 Device overview

Bar code readers of the BCL 200i series are high-speed scanners with integrated decoder for all commonly used bar codes, e.g. 2/5 Interleaved, Code 39, Code 128, EAN 8/13 etc., as well as codes from the GS1 DataBar family.

Bar code readers of the BCL 200i series are available in various models as line/raster scanners with deflecting mirror.

The interfaces integrated in the various device models offer an optimum connection to the superior host system:

- Ethernet TCP/IP UDP
- Ethernet/IP
- PROFINET IO

4.2 Performance characteristics

- Integrated fieldbus connectivity, Plug-and-Play fieldbus coupling and easy networking
- Numerous interface variants facilitate connection to the superior systems
  - Ethernet
- Integrated code reconstruction technology (CRT) enables the identification of soiled or damaged bar codes
- Maximum depth of field and reading distances from 40 mm to 255 mm
- Large optical opening angle and, thus, large reading field width
- High scanning rate with 1000 scans/s for fast reading tasks
- Adjustment of all device parameters with a web browser
- Easy alignment and diagnostics functions
- Two freely programmable switching inputs/outputs for the activation or signaling of states
- Automatic monitoring of the read quality with autoControl
- Automatic recognition and setting of the bar code type using autoConfig
- Reference code comparison
- Heavy-duty housing of degree of protection IP 65

	NOTICE
	Information on technical data and characteristics: see chapter 13 "Technical data"

Integrated fieldbus connectivity

The integrated fieldbus connectivity contained in the bar code readers of the BCL 200i series facilitates the use of identification systems which function without connection unit or gateways. The integrated fieldbus interface considerably simplifies handling. The Plug-and-Play concept enables easy networking and very simple commissioning: Directly connect the respective fieldbus and all configuration is performed with no additional software.

CRT decoder

For decoding bar codes, the bar code readers of the BCL 200i series make available the proven CRT decoder with code reconstruction technology.

The proven code reconstruction technology (CRT) enables bar code readers of the BCL 200i series to read bar codes with a small bar height, as well as bar codes with a damaged or soiled print image.

With the aid of the CRT decoder, bar codes can also be read without problem in other demanding situations, such as with a large tilt angle (azimuth angle or even angle of rotation).

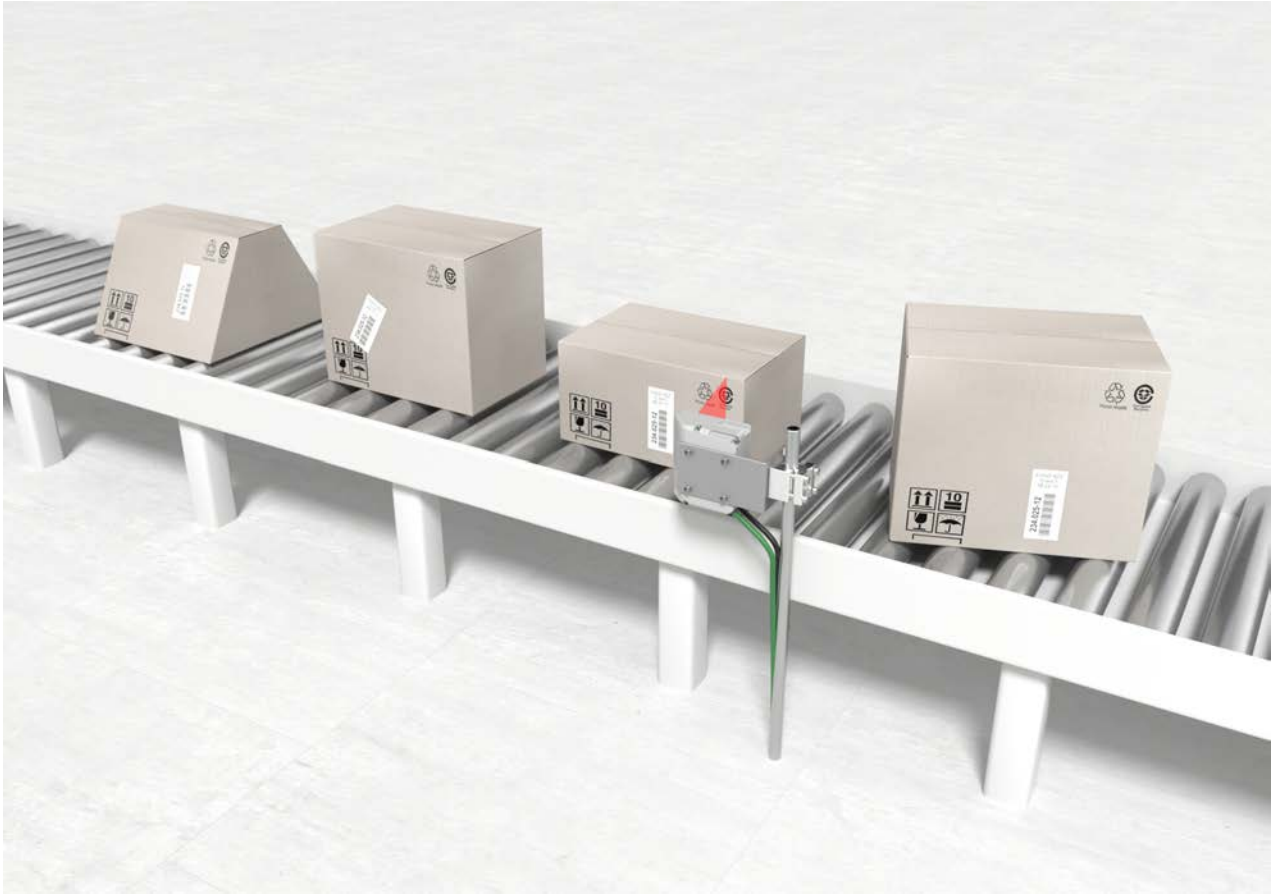

Fig. 4.1: Possible bar code orientation

Configuration

Configuration of the BCL 208i usually takes place via the HOST interface using the integrated webConfig tool. Alternatively, the bar code readers can be configured via the host/service interface using configuration commands.

The bar code reader needs a suitable activation to start a read process as soon as an object is in the reading field. This opens a time window ("reading gate") in the bar code reader for the read process during which the bar code reader has time to detect and decode a bar code.

In the basic setting, triggering takes place through an external reading cycle signal. Alternative activation options include online commands via the host interface and the autoReflAct function.

Through the read operation, the bar code reader collects additional useful pieces of data for diagnostics which can also be transmitted to the host. The quality of the read operation can be inspected using the alignment mode which is integrated in the webConfig tool.

4.3 Device construction

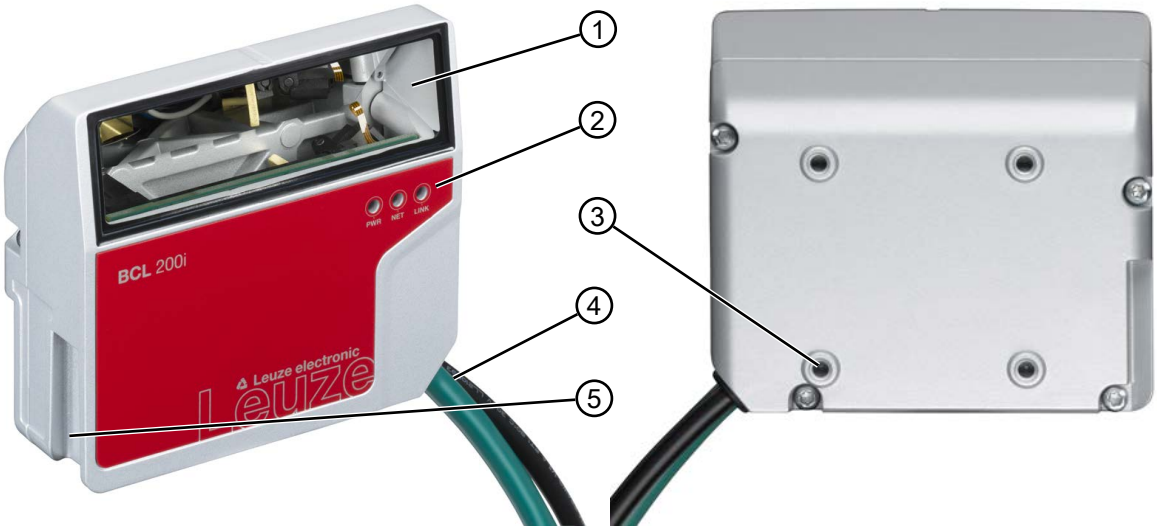

1 Reading window
2 Indicator LEDs
3 4 mounting threads on the rear of the device
4 Connection cable
5 Dovetail mounting

Fig. 4.2: Device construction BCL 200i – Line scanner with deflecting mirror

4.4 Display elements

Located on the front side of the housing are three multicolor indicator LEDs: PWR, NET, LINK.

Fig. 4.3: LED indicators

PWR LED

Tab. 4.1: PWR indicators

Color	State	Description
---	OFF	Device off No supply voltage
Green	Flashing	Device ok • Initialization phase • Bar code reading not possible • Supply voltage applied • Self test running
	Continuous light	Device ok • Bar code reading possible • Self test successfully finished • Device monitoring active
	Briefly off - on	Good Read • Bar code reading successful
	Green briefly off – briefly red – green on	No read • Bar code reading not successful
Orange	Continuous light	Service mode • Bar code reading possible • No data on the host interface
Red	Flashing	Device ok, warning set • Bar code reading possible • Temporary operating fault
	Continuous light	Device error/parameter enable • Bar code reading not possible

NET LED

Tab. 4.2: NET indicators

Color	State	Description
---	OFF	No supply voltage • No communication possible • Ethernet protocols not released
Green	Flashing	Initialization of the device Establishing communication
	Continuous light	Operation ok • Network mode ok • Connection and communication to Host established
Red	Flashing	Communication error • Temporary connection error • If DHCP is active, no address could be obtained
	Continuous light	Network error • No connection established • No communication possible

LINK LED

Tab. 4.3: LINK indicators

Color	State	Description
Green	Continuous light	Ethernet connected (LINK)
Yellow	Flashing	Data communication (ACT)

4.5 Reading techniques

4.5.1 Line scanner (single line)

The scan line scans the label. Due to the optical opening angle, the reading field width is dependent on the read distance. Through the movement of the object, the entire bar code is automatically transported through the scan line.

The integrated code reconstruction technology permits twisting of the bar code (tilt angle) within certain limits. These are dependent on the transport speed, the scanning rate of the scanner and the bar code properties.

Areas of application of the line scanner

- With the bars of the bar code arranged lengthwise with respect to the conveying direction ("ladder arrangement")
- With bar codes having very short bar lengths
- When the ladder code is turned out of the vertical position (tilt angle)

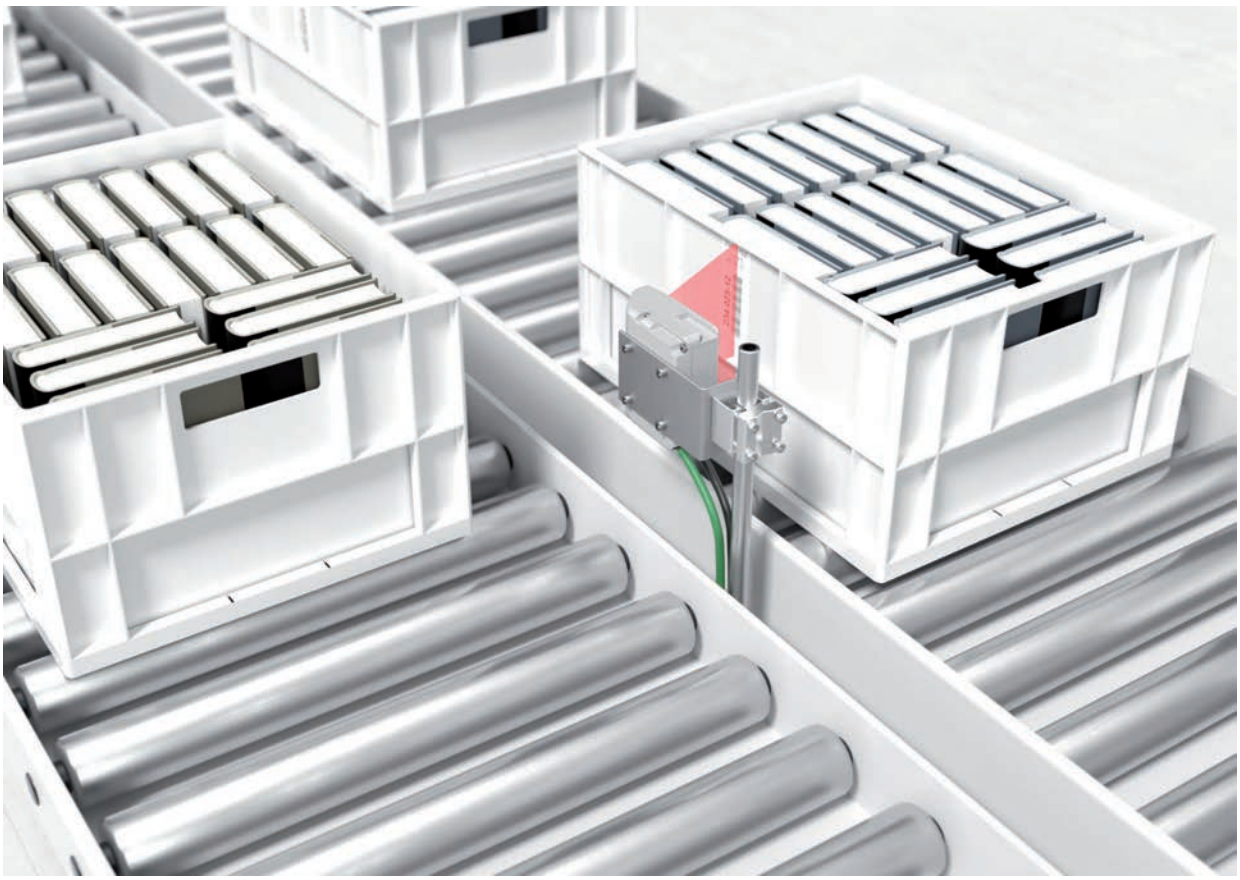

Fig. 4.4: Deflection principle for the line scanner

4.5.2 Raster scanner (raster line)

Multiple scan lines scan the label. Due to the optical opening angle, the reading field width is dependent on the read distance. Provided the code is located in the reading field, it can be read during standstill. If the code moves through the reading field, it is scanned by multiple scan lines.

The integrated code reconstruction technology permits twisting of the bar code (tilt angle) within certain limits. These are dependent on the transport speed, the scanning rate of the scanner and the bar code properties. In most cases, everywhere a line scanner is used, a raster scanner can be used.

Areas of application of the raster scanner

- With the bars of the bar code arranged perpendicular with respect to the conveying direction ("picket fence arrangement")
- With bar codes with low height displacement
- With very glossy bar codes

	NOTICE
	There may not be two or more bar codes in the raster detection range simultaneously.

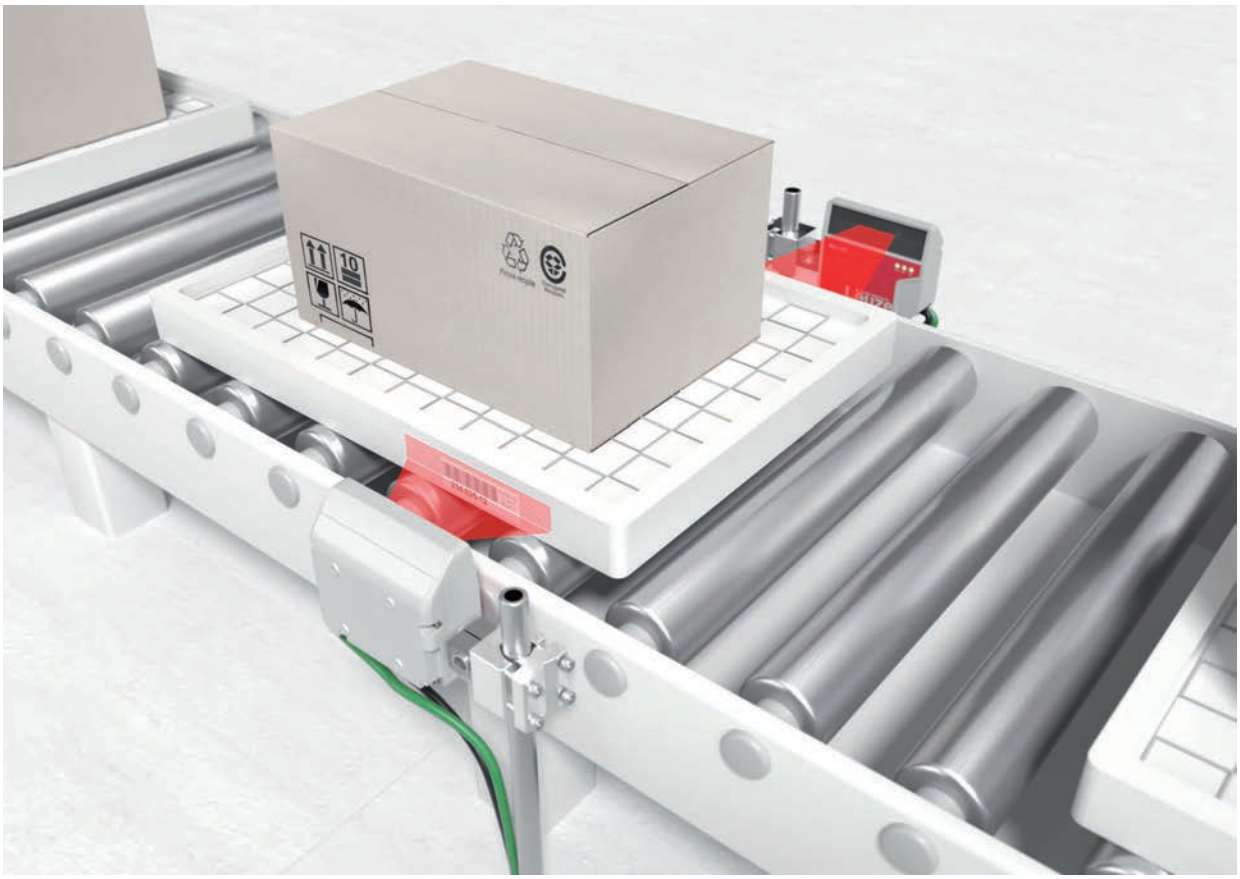

Fig. 4.5: Deflection principle for the raster scanner

4.6 Fieldbus systems

Various product variants of the BCL 200i series are available for connecting to different fieldbus systems such as PROFINET, Ethernet, and EtherNet/IP.

4.6.1 Ethernet

The BCL 208i is designed as an Ethernet device (acc. to IEEE 802.3) with a standard baud rate of 10/100 Mbit. On delivery, each BCL 208i comes with a unique MAC-ID; this ID cannot be changed.

The BCL 208i automatically supports the transmission rates of 10 Mbit/s (10Base T) and 100 Mbit/s (100Base TX), as well as auto-negotiation and auto-crossover.

The BCL 208i features multiple M12 connectors / sockets for the electrical connection of the supply voltage, the interface and the switching inputs and outputs. For further information on electrical connection, see chapter 6 "Electrical connection".

The BCL 208i supports further protocols and services for communication:

- TCP / IP (client/server)
- UDP
- DHCP
- Telnet
- HTTP
- ARP
- PING

For communication with the superior host system, the corresponding TCP/IP protocol (client/server mode) or UDP must be selected.

Further information on commissioning: see chapter 7 "Starting up the device – Leuze webConfig tool".

4.6.2 Ethernet – star topology

The BCL 208i can be operated as a single device (stand-alone) with an individual IP address in a star topology. The IP address can either be set permanently via webConfig tool or assigned dynamically via a DHCP server.

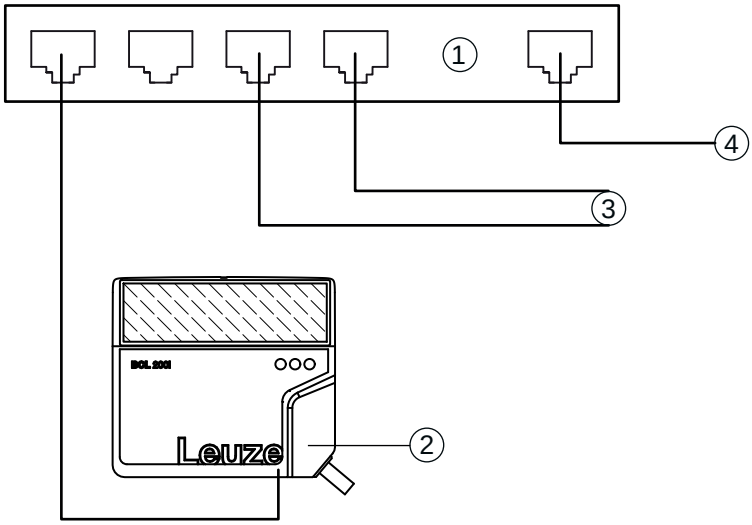

1	Ethernet switch
2	Bar code reader of the BCL 200i series
3	Other network participants
4	Host interface - PC/control

Fig. 4.6: Ethernet in a star topology

4.7 autoReflAct

autoReflAct stands for **auto**matic **Refl**ector **Act**ivation and permits an activation without additional sensors. This is achieved by directing the scanner with reduced scanning beam towards a reflector mounted behind the conveyor path.

	NOTICE
	Suitable reflectors are available, see chapter 14.5 "Accessories – Reflectors and reflective tapes".

As long as the scanner is targeted at the reflector, the reading gate remains closed. If, however, the reflector is blocked by an object such as a container with a bar code label, the scanner activates the read procedure, and the label on the container is read. When the path from the scanner to the reflector has cleared, the read procedure has completed and the scanning beam is reduced and again directed onto the reflector. The reading gate is closed.

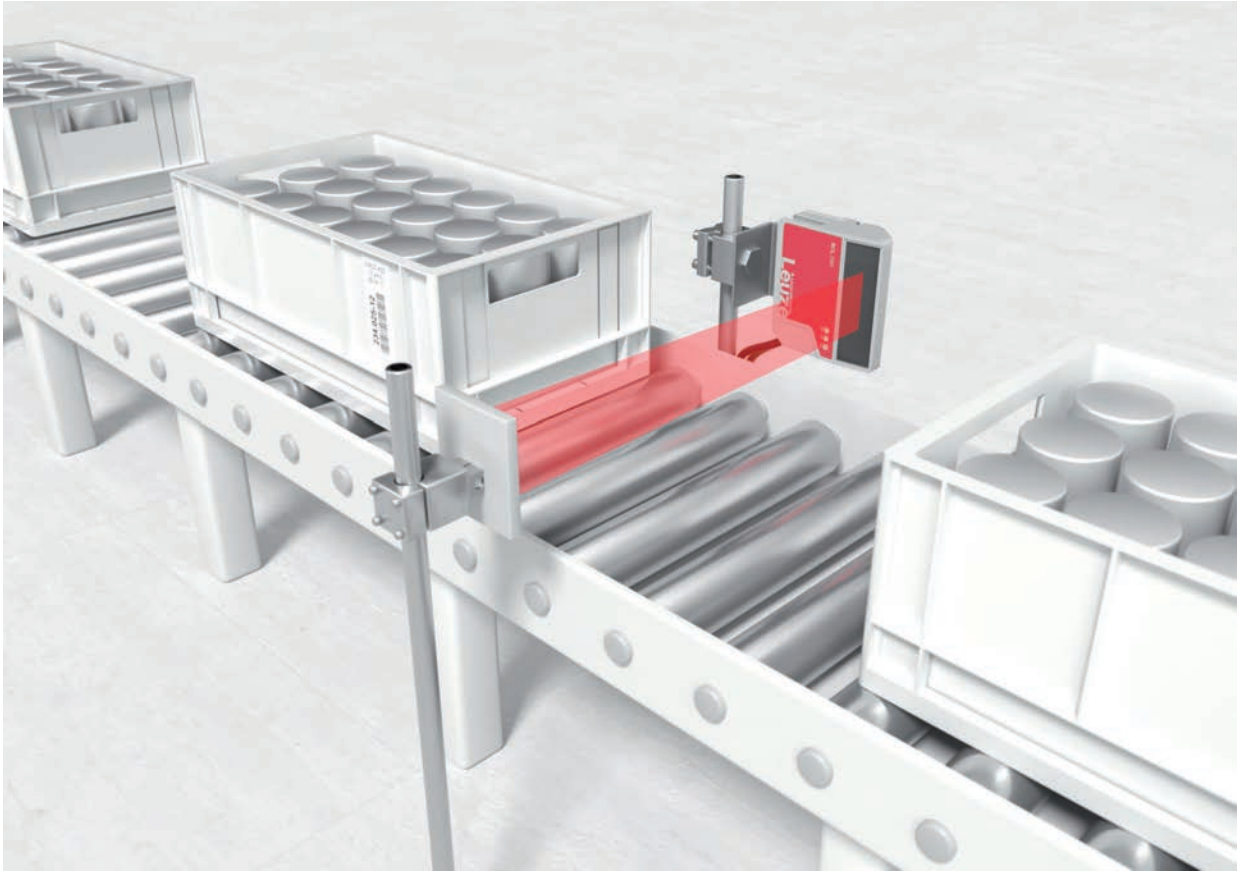

Fig. 4.7: Reflector arrangement for autoReflAct

The autoReflAct function uses the scanning beam to simulate a photoelectric sensor and thus permits an activation without additional sensors.

4.8 Reference codes

The bar code reader offers the possibility of storing one or two reference codes.

It is possible to store the reference codes via the webConfig tool or via online commands.

The bar code reader can compare read bar codes with one and/or both reference codes and execute user-configurable functions depending on the comparison result.

4.9 autoConfig

With the autoConfig function, the bar code reader offers an extremely simple and convenient configuration option to users who only want to read one code type (symbology) with one number of digits at a time.

After starting the autoConfig function via the switching input or from a superior control, it is sufficient to position a bar code label with the desired code type and number of digits in the reading field of the bar code reader.

Afterward, bar codes with the same code type and number of digits are recognized and decoded.

5 Mounting

5.1 Transport and storage

NOTICE
↳ Package the device for transport and storage in such a way that is protected against shock and humidity. Optimum protection is achieved when using the original packaging. ↳ Ensure compliance with the approved environmental conditions listed in the specifications.

Unpacking

↳ Check the packaging content for any damage. If damage is found, notify the post office or shipping agent as well as the supplier.

↳ Check the delivery contents using your order and the delivery papers:

- Delivered quantity
- Device type and model as indicated on the nameplate
- Package insert

The name plate on the bottom of the device provides information as to what BCL type your device is, see chapter 13 "Technical data".

↳ Save the original packaging for later storage or shipping.

↳ If you have questions, please contact your supplier or Leuze customer service, see chapter 12 "Service and support".

↳ Observe the applicable local regulations when disposing of the packaging materials.

5.2 Mounting

The bar code reader can be mounted in the following ways:

- Mounting with four M4x5 screws on the rear side of the housing.
- Mounting with mounting devices on the fastening groove on one side of the housing.

NOTICE
↳ When mounting, ensure that the scanning beam is not reflected directly back to the scanner by the label which is being read. For further information, see the notes in see chapter 5.3 "Selecting a mounting location". ↳ Please refer to see chapter 13.2 "Reading fields" for the permissible minimum and maximum distances between the bar code reader and the labels to be read.

5.2.1 Mounting with M4 fastening screws

↳ Mount the device on the system with M4 fastening screws (not included in delivery contents).

⇨ Max. tightening torque of the fastening screws: 2.5 Nm

⇨ Location and thread depth of the mounting thread: see chapter 13.3 "Dimensioned drawings"

5.2.2 Mounting with BT 56 or BT 56-1 mounting device

Mounting with the mounting device is intended for rod mounting.

Order guide: see chapter 14.4 "Accessories – mounting systems"

↳ Mount the mounting device on the rod with the clamp profile (system-side).

↳ Mount the device on the mounting device using the fastening grooves.

⇨ Max. tightening torque of the fastening screws: 1.4 Nm

5.2.3 Mounting with BT 300-1 mounting device

Mounting with the mounting device is intended for rod mounting (10 – 16 mm).

Order guide: see chapter 14.4 "Accessories – mounting systems"

- Mount the mounting device on the rod with the clamp profile (system-side).
- Mount the device on the mounting device (included with delivery) using the fastening screws.
  - ⇨ Max. tightening torque of the fastening screws: 2.5 Nm

5.2.4 Mounting with the BT 300 W mounting bracket

Mounting with the BT 300 W mounting bracket is intended for wall mounting.

Order guide: see chapter 14.4 "Accessories – mounting systems"

- Mount the mounting bracket on the system side with M4 fastening screws (not included in delivery contents).
- Mount the device to the mounting bracket (included in delivery) with M4 fastening screws.
  - ⇨ Max. tightening torque of the fastening screws: 2.5 Nm

5.3 Selecting a mounting location

	NOTICE
	The size of the bar code module influences the maximum reading distance and the width of the reading field. - When selecting a mounting location and/or the bar code label, take into account the different reading characteristics of the bar code reader with various bar code modules.

	NOTICE
	Observe when choosing the mounting location! - Maintain the permissible environmental conditions (humidity, temperature). - Avoid possible soiling of the reading window due to liquids, abrasion by boxes, or packaging material residues. - Ensure that there is the lowest possible chance of damage to the bar code reader by mechanical collision or jammed parts. - Avoid possible ambient light influence (no direct sunlight).

In order to select the right mounting location, several factors must be considered:

- Size, orientation, and position tolerance of the bar codes on the objects to be scanned.
- The reading field of the bar code reader in relation to the bar code module width.
- The resulting minimum and maximum reading distance from the respective reading field with the respective module width (see chapter 13.2 "Reading fields").
- alignment of the bar code reader for avoiding reflections.
- Distance between bar code reader and host system with respect to the interface.
- The correct time for data output. The bar code reader should be positioned in such a way that, taking into consideration the time required for data processing and the conveyor belt speed, there is sufficient time to e.g. initiate sorting operations on the basis of the read data.
- The display elements such as LEDs should be highly visible.
- For configuring and commissioning with the webConfig tool, the HOST interface should be easily accessible.

The best read results are obtained if the following prerequisites are fulfilled:

- The reading distance lies in the middle area of the reading field.
- There is no direct sunlight and protect against ambient light effects.
- The bar code labels are of good print quality and have good contrast ratios.
- You are not using high-glossy labels.
- The bar code is moved past with an angle of inclination of ±10° … 15° to vertical.

	NOTICE
	Avoid direct reflection of the laser beam! The beam on the bar code reader is emitted at 105° to the housing base. An angle of incidence of 15° of the laser to the label has already been integrated in the deflecting mirror so that the bar code reader can be installed parallel to the bar code (rear housing wall).

↳ Mount the bar code reader with deflecting mirror parallel to the bar code.

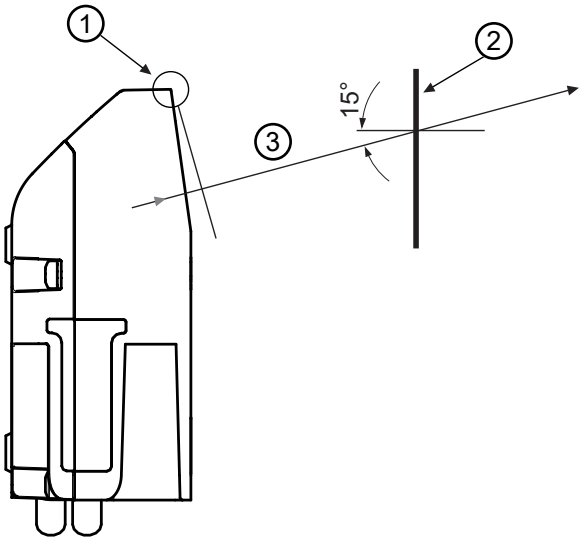

1 Zero position
2 Bar code
3 Distance acc. to reading field curves

Fig. 5.1: Total reflection – line scanner

Reading angle between bar code reader and bar code

The optimum alignment of the bar code reader is accomplished when the scan line scans the bar code bars almost at a right angle (90°). All reading angles that are possible between the scan line and bar code must be taken account.

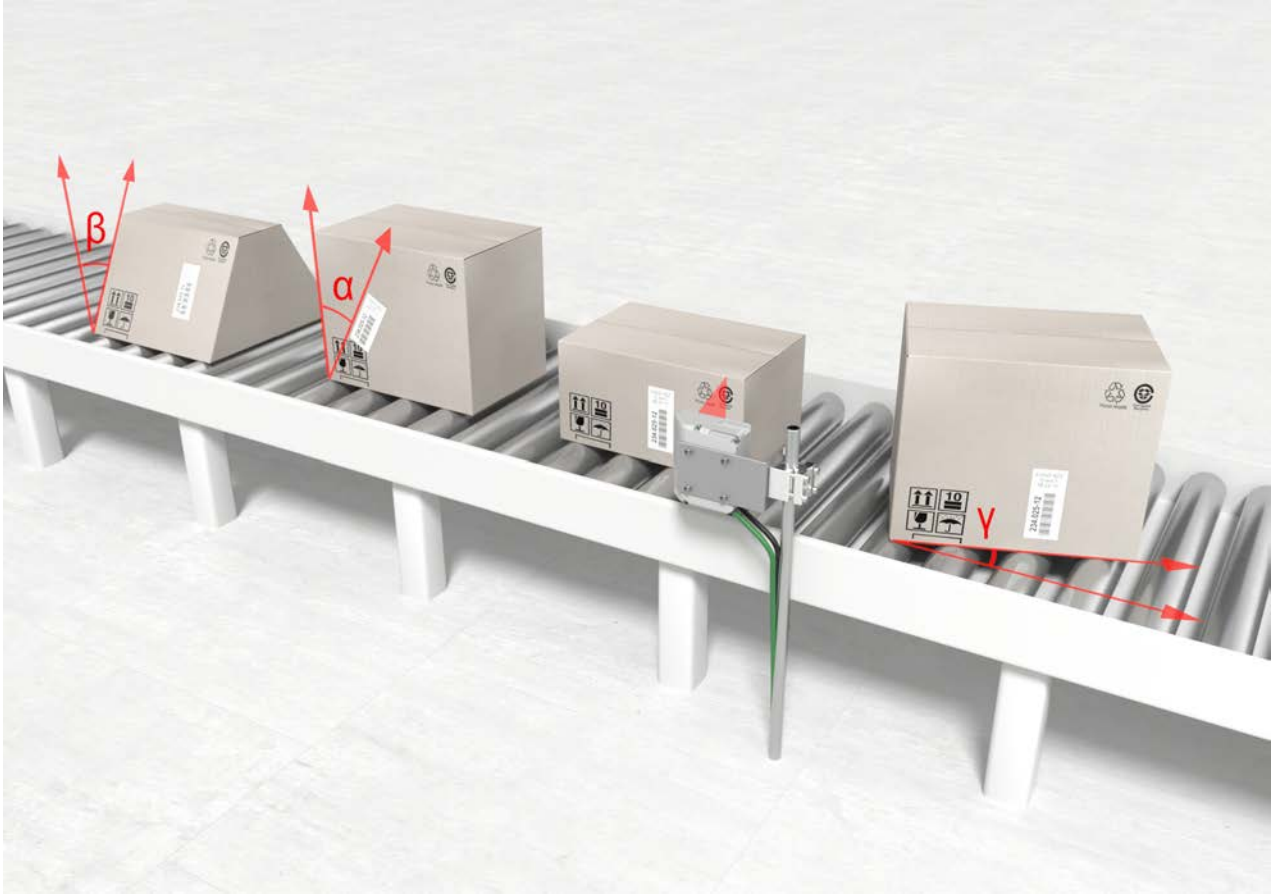

α	Azimuth angle (tilt)
β	Angle of inclination (Pitch)
γ	Angle of rotation (skew)

Fig. 5.2: Reading angle for the line scanner

In order to avoid total reflection, the γ angle of rotation (skew) should be greater than 10°.

5.4 Cleaning

- Clean the glass window of the bar code reader with a soft cloth after mounting.
- Remove all packaging remains, e.g. carton fibers or Styrofoam balls.
- In doing so, avoid leaving fingerprints on the front screen of the bar code reader.

	NOTICE
!	**Do not use aggressive cleaning agents!** Do not use aggressive cleaning agents such as thinner or acetone for cleaning the device.

6 Electrical connection

CAUTION

Safety notices!

- The bar code reader is completely sealed and must not be opened.
- Do not try to open the device under any circumstances, as this avoids both degree of protection IP65 and the warranty.
- Before connecting the device, be sure that the supply voltage agrees with the value printed on the name plate.
- Connection of the device and maintenance work while under voltage must only be carried out by a qualified electrician.
- Ensure that the functional earth (FE) is connected correctly. Unimpaired operation is only guaranteed when the functional earth is connected properly.
- If faults cannot be rectified, take the device out of operation and protect it from accidentally being started.

CAUTION

UL applications!

For UL applications, use is only permitted in Class 2 circuits in accordance with the NEC (National Electric Code).

NOTICE

Protective Extra Low Voltage (PELV)!

The device is designed in accordance with protection class III for supply with PELV (Protective Extra-Low Voltage).

NOTICE

Degree of protection IP65

Degree of protection IP65 is achieved only if the connectors are screwed into place and caps installed.

The bar code reader is equipped with two connection cables, each with an M12 connector.

- PWR/SWIO: M12 connection for supply voltage and switching input/output, 5-pin, A-coded, cable length 0.9 m (unshielded)
- HOST: M12 connection for Ethernet, 4-pin, D-coded, cable length 0.7 m (shielded)

1 PWR/SWIO, M12 connector, 5-pin, A-coded
2 HOST, M12 socket, 4-pin, D-coded

Fig. 6.1: Electrical connections

6.1 PWR/SWIO (supply voltage, switching input and switching output)

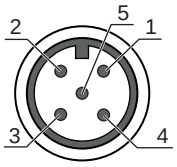

Fig. 6.2: M12 connector, 5-pin, A-coded

Tab. 6.1: PWR/SWIO pin assignment

Pin	Designation	Assignment
1	VIN	Positive supply voltage +18 … +30 V DC
2	SWI1	Configurable switching input 1
3	GNDIN	Negative supply voltage 0 V DC
4	SWO2	Configurable switching output 2
5	FE	Functional earth

Supply voltage

CAUTION

UL applications!

For UL applications, use is only permitted in Class 2 circuits in accordance with the NEC (National Electric Code).

NOTICE

Protective Extra Low Voltage (PELV)!

The device is designed in accordance with protection class III for supply with PELV (Protective Extra-Low Voltage).

NOTICE
Connections of the functional earth FE Ensure that the functional earth (FE) is connected correctly. Unimpaired operation is only guaranteed when the functional earth is connected properly. All electrical disturbances (EMC couplings) are discharged via the functional earth connection.

Switching input / switching output

The bar code readers of the BCL 200i series are equipped with

- 1 fixed, programmable, opto-decoupled switching input SWI1
- 1 fixed, programmable, opto-decoupled switching output SWO2

The switching input can be used to activate various internal functions of the bar code reader (decoding, autoConfig, …). The switching output can be used to signal the state of the bar code reader and to implement external functions independent of the superior control.

The switching input/output is configured as follows by default:

- SWI1: Switching input reading gate start/stop (default)
- SWO2: GOOD READ switching output (default)

NOTICE
You can configure the respective function with the help of the webConfig tool.

The external wiring as switching input and switching output is described in the following. The respective function assignment to the switching inputs/outputs can be found in see chapter 8 "Starting up the device - Configuration".

Function as switching input

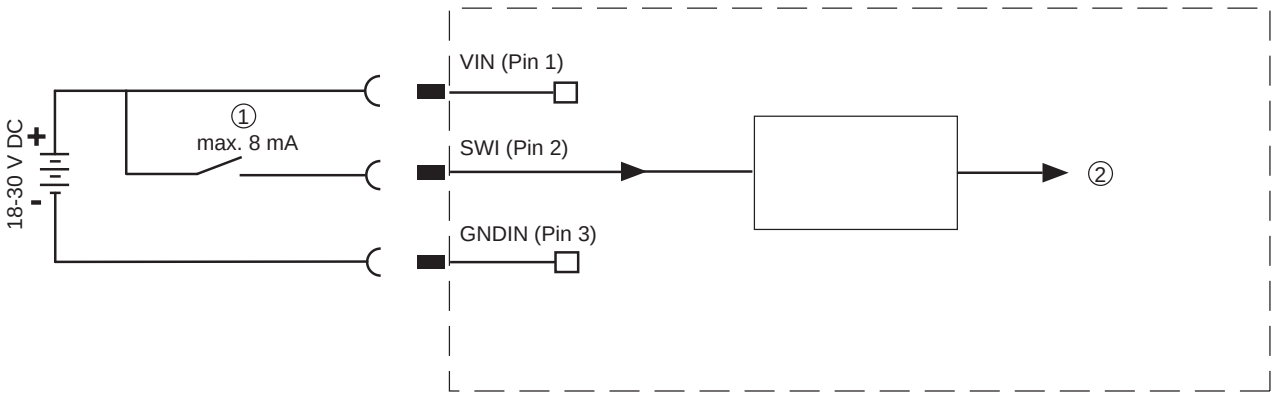

1 Switching input
2 Switching input to controller

Fig. 6.3: Connection diagram for switching input SWI1

NOTICE
The maximum input current must not exceed 8 mA.

Function as switching output

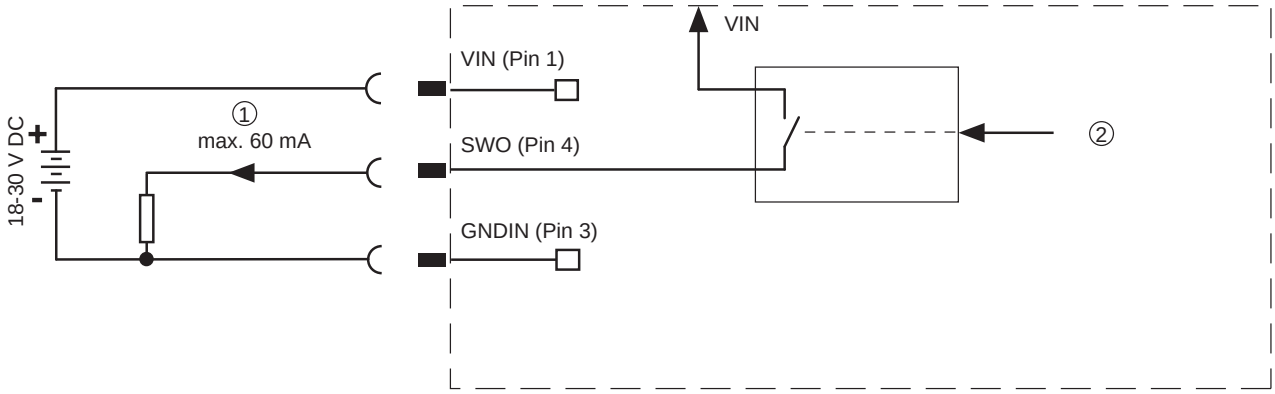

1 Switching output
2 Switching output from controller

Fig. 6.4: Connection diagram for switching output SWO2

NOTICE	
!	Each configured switching output is short-circuit proof! Do not load the respective switching output of the bar code reader with more than 60 mA at +18 … +30 V DC in normal operation.

6.2 HOST (Ethernet, cable assignments)

The BCL 208i makes the Ethernet interface available as host interface.

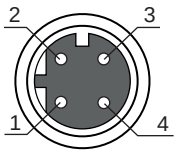

Fig. 6.5: M12 socket, 4-pin, D-coded

Tab. 6.2: HOST pin assignment

Pin	Designation	Assignment
1	TDO+	Transmit Data +
2	RDO+	Receive Data +
3	TDO-	Transmit Data -
4	RDO-	Receive Data -
Thread	FE	Functional earth (housing)

Ethernet cable assignments

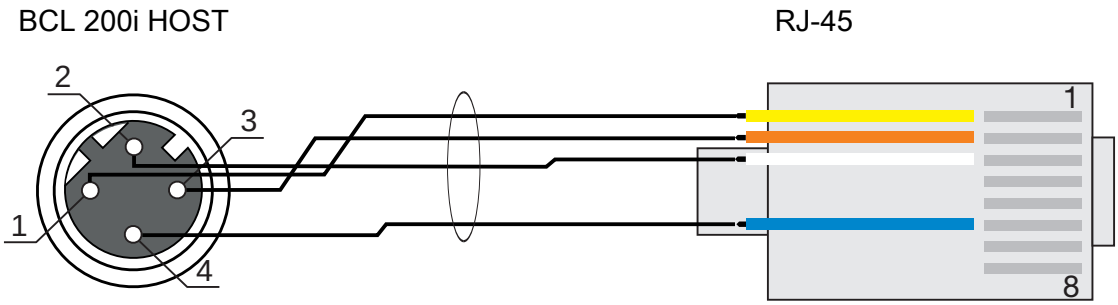

Fig. 6.6: HOST to RJ-45 cable assignments

Designed as shielded cable, max. 100 m.

Pin (M12)	Designation	Pin/core color (RJ-45)
1	TD+	1/yellow
2	RD+	3/white
3	TD-	2/orange
4	RD-	6/blue

NOTICE

Self-configured cables with Ethernet interface

- Ensure adequate shielding.
- The entire interconnection cable must be shielded and earthed.
- The RD+/RD- and TD+/TD- wires must be stranded in pairs.
- Use at least a CAT 5 cable for the connection.

6.3 Ethernet topologies

The BCL 208i can be operated as a single device (stand-alone) with an individual IP address in a star topology. The IP address can either be set permanently via webConfig tool or assigned dynamically via a DHCP server.

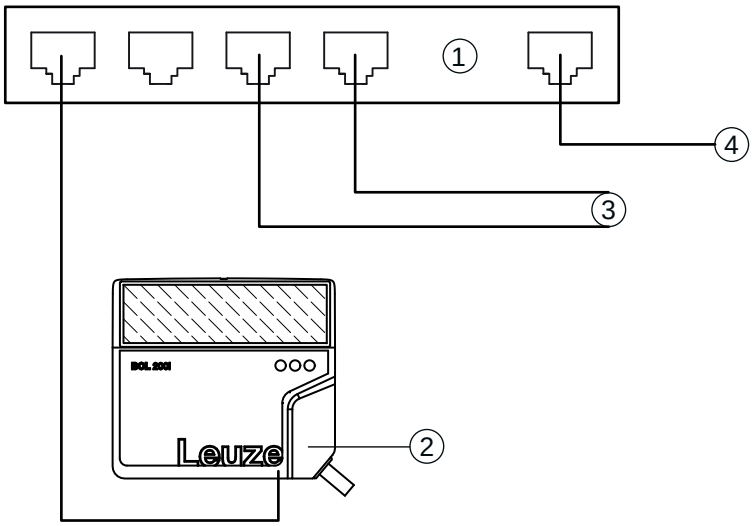

1	Ethernet switch
2	Bar code reader of the BCL 200i series
3	Other network participants
4	Host interface - PC/control

Fig. 6.7: Ethernet in a star topology

Ethernet wiring

A Cat. 5 Ethernet cable should be used for wiring.

6.4 Cable lengths and shielding

↳ Observe the maximum cable lengths and shielding:

Tab. 6.3: Cable lengths and shielding

Connection	Interface	Max. cable length	Shielding
BCL – host	Ethernet	100 m	Required
BCL – power supply unit		30 m	Not necessary
Switching input		10 m	Not necessary
Switching output		10 m	Not necessary

7 Starting up the device – Leuze webConfig tool

With the webConfig tool, an operating-system independent, web-technology based, graphical user interface is available for configuring bar code readers of the BCL 200i series.

The webConfig tool can be run on any Internet-ready PC. The webConfig tool uses HTTP as communication protocol and the client-side restriction to standard technologies (HTML, JavaScript and AJAX) that are supported by modern browsers.

	NOTICE
	The webConfig tool is offered in the following languages: German, English, French, Italian and Spanish

7.1 System requirements

	NOTICE
	↳ Regularly update the operating system and the Internet browser. ↳ Install the current Windows Service Packs.

Tab. 7.1: System requirements for the webConfig tool

Monitor	Min. resolution: 1280 x 800 pixels or higher
Internet browser	Recommended is a current version of: Mozilla Firefox Google Chrome Microsoft Edge

	NOTICE
	Other Internet browsers are possible but have not been tested with the current device firmware.

7.2 Start webConfig tool

↳ Start the webConfig tool via your PC's Internet browser with IP address **192.168.60.101** or with the IP address set by you.

⇨ **192.168.60.101** is the standard Leuze IP address for communication with bar code readers of the BCL 200i series.

The following start page appears on your PC:

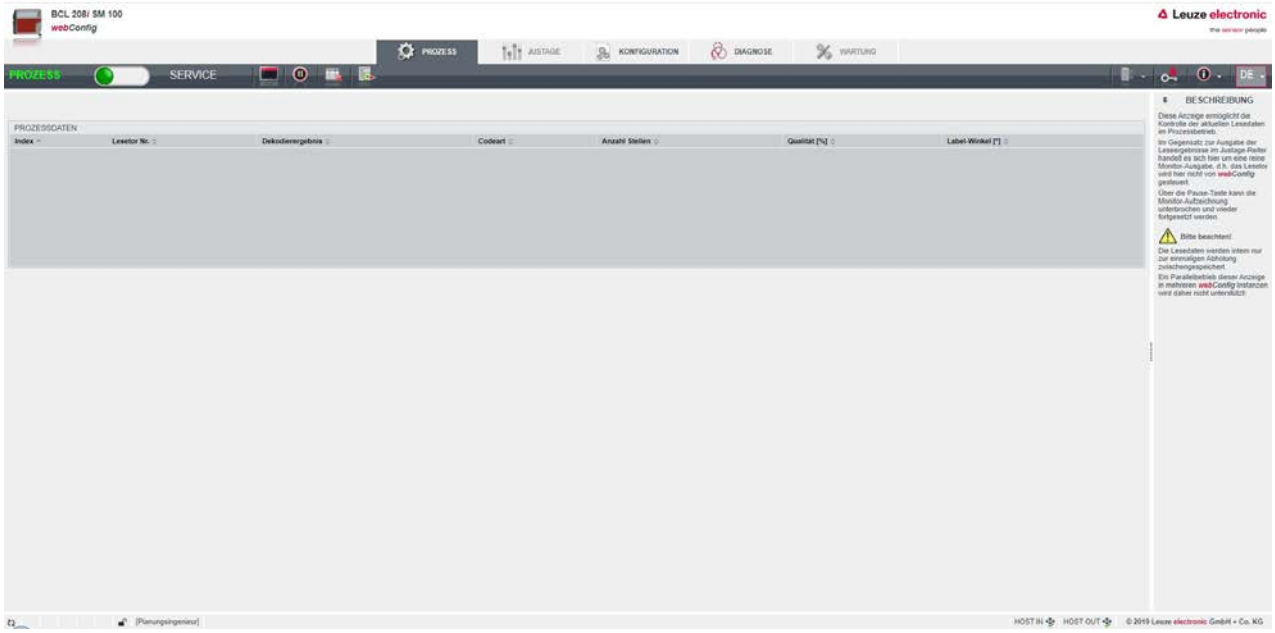

Fig. 7.1: webConfig tool – start page

The user interface of the webConfig tool is largely self-explanatory.

	NOTICE
	The webConfig tool is completely contained in the firmware of the device. The pages and functions of the webConfig tool may appear and be displayed differently depending on the firmware version.

7.3 Short description of the webConfig tool

The webConfig tool has five main menus:

- PROCESS
  - Information on the current result
- ALIGNMENT
  - Alignment of the bar code reader
  - Manually starting of read processes. The results of the read processes are displayed immediately. As a result, this menu item can be used to determine the optimum installation location.
- CONFIGURATION
  - Configuring decoding
  - Configuring data formatting and data output
  - Configuring the switching inputs/outputs
  - Configuring communication parameters and interfaces
- DIAGNOSIS
  - Event logging of warnings and errors
- MAINTENANCE
  - Update firmware

7.3.1 CONFIGURATION menu

The adjustable parameters of the bar code reader are clustered in modules in the CONFIGURATION menu.

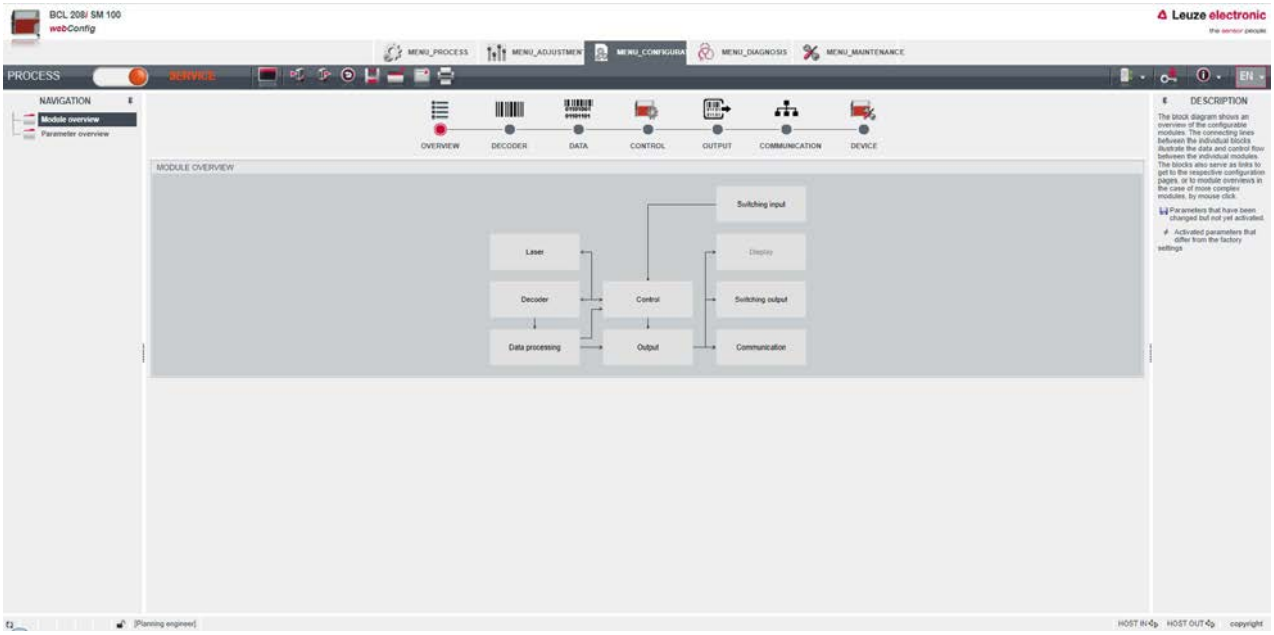

Fig. 7.2: webConfig tool – CONFIGURATION menu

Overview of the configurable modules

- Overview
  - The individual modules and their relationships to one another are graphically displayed in the module overview. The display is context sensitive, i.e. click a module to directly access the corresponding submenu.
- Decoder
  - Configuration of the decoder table, such as code type, number of digits, etc.
- Data
  - Configuration of code content, such as filtering, segmentation of bar code data, etc.
- Control
  - Configuration of activation and deactivation, e.g. auto-activation, AutoReflAct, etc.
- Output
  - Configuration of data output, header, trailer, reference code, etc.
- Communication
  - Configuration of the host interface
- Device
  - Configuration of the switching inputs and outputs

	NOTICE
	A description containing notes and explanations for all called-up functions can be found at the right-hand edge of the screen. The language that is used can be selected in the webConfig tool via the language selection list.

The current configuration of your bar code reader is loaded upon startup of the webConfig tool. If you change the configuration via the control while the webConfig tool is running, you can use the [Load parameter from device] button after making the changes to update the display in the webConfig tool. This button appears in the upper left in the center window area in all submenus of the CONFIGURATION main menu.

8 Starting up the device - Configuration

ATTENTION

LASER

↳ Observe the safety notices in see chapter 2.5 "Laser safety notices".

Configuration with the webConfig tool

The BCL 208i is configured using the webConfig tool.

↳ Set up an Ethernet connection between the BCL 208i and a PC/notebook.

8.1 Starting the device

NOTICE

Before commissioning, familiarize yourself with the operation and configuration of the BCL 208i.

Before connecting the supply voltage, recheck all connections and ensure that they have been properly made.

↳ Connect the +18 … 30 V DC supply voltage (typically +24 V DC).

⇨ The BCL 208i starts up, the PWR, NET and LINK LEDs indicate the operating state.

First, you must now set the communication parameters of the BCL 208i.

8.2 Setting configuration parameters

With the communication parameters, you determine how data is exchanged between BCL 208i and host system, monitor PCs etc.

The communication parameters are independent of the topology in which the BCL 208i is operated,

8.2.1 Manually setting the IP address

If you would like to directly access webConfig, you must set the IP address manually.

Factory settings for the network address of the bar code readers of the BCL 200i series:

- IP address: 192.168.60.101
- Subnet mask: 255.255.255.0

Setting the IP address via PC/laptop

Set the network address on the PC (example for Windows7).

↳ Log in as administrator.

↳ Select **Start > System control > Network and Internet > Network and Sharing Center**.

⇨ Select *LAN connection* and double-click to open the *Properties* dialog.

↳ Select *Internet Protocol Version 4 (TCP/IPv4)* and click on the [Properties] button.

↳ Set the *IP address* of the PC.

⇨ The IP address of the PC must not be identical to the IP address of the bar code reader.

⇨ Example: IP address of the sensor: 192.168.60.101
IP address of the PC: 192.168.60.110

↳ Set the subnet mask of the PC to the same value as on the bar code reader.

⇨ Example: 255.255.255.0

↳ Confirm all of the settings dialogs with [OK] or [Close].

↳ Connect the Ethernet interface of the device directly to the LAN port of the PC.

↳ Start the webConfig tool using your PC's Internet browser with IP address 192.168.60.101.

NOTICE	
	The device cannot be accessed if the IP address is incorrect! Make certain that the correct IP address is entered. The device can otherwise no longer be accessed.

Setting the IP address with Device-Finder

- Download the program *Device-Finder* from the Internet to the PC.
  - Call up the Leuze home page: **www.leuze.com**.
  - Enter the type designation or part number of the device as the search term.
  - The program *Device-Finder* can be found on the product page for the device under the *Downloads* tab.
- Connect the Ethernet interface of the device directly to the LAN port of the PC.
- Start the program *Device-Finder*.
  - The program displays all bar code readers of the BCL 200i series that are available in the network.
- Select the BCL 2xxi bar code reader from the list.
  - You can now change the IP address of the bar code reader to the desired IP address.

NOTICE	
	If the setting is performed via the webConfig tool, the BCL 208i must be restarted. The set IP address is only accepted and active after this restart.

8.2.2 Automatically setting the IP address

Set the IP address automatically if a DHCP server assigns the IP addresses in the system.

- Select the option to obtain the IP address automatically in the webConfig tool:
  Configuration > Communication > Ethernet interface
- Activate the *DHCP* = *ON* setting.

NOTICE	
	The BCL 208i responds to ping commands. A simple test to determine whether the address assignment was successful is to enter the previously configured IP address in a ping command (e.g. ping 192.168.60.101 in a command line window under Windows).

8.2.3 Ethernet host communication

You can configure the connections to an external host system via the Ethernet host communication.

You can use both the UDP protocol as well as the TCP/IP protocol – in either client or in server mode. Both protocols can be activated simultaneously and used in parallel

- The connection-free UDP protocol is used primarily to transfer process data to the host (monitor operation).
- The connection-oriented TCP/IP protocol can also be used to transfer commands from the host to the device. With this connection, the data is backed up by the TCP/IP protocol itself.
- If you would like to use the TCP/IP protocol, you must also define whether the device is to operate as a TCP client or as a TCP server.

ПРОМЭЛЕКТРОНИКА / sales@prom-elec.com

UDP

The device requires from the user the IP address and the port number of the communication partner. In the same way, the host system (PC/control) also requires the set IP address of the device and the selected port number. By assigning these parameters, a socket is formed via which the data can be sent and received.

- Activate the UDP protocol.
- Set the following values:
  - IP address of the communication partner
  - Port number of the communication partner

The corresponding adjustment options can be found in the webConfig tool:
Configuration > Communication > Host communication

TCP/IP

- Activate the TCP/IP protocol.
- Set the TCP/IP mode of the device.
  - In TCP client mode, the device actively establishes the connection to the superior host system, e.g., PC/control as server. The device requires from the user the IP address of the server (host system) and the port number on which the server (host system) accepts a connection. In this case, the device determines when and with whom a connection is established.
  - In TCP server mode, the superior host system (PC/control) actively establishes the connection and the connected device waits for the connection to be set up.
    The TCP/IP stack must be informed by the user as to the local port of the device (port number) on which connection requests from a client application (host system) are to be received.
    If there is a connection request and a connection is established by the superior host system (PC/control as client), the device – in server mode – accepts the connection. Data can then be sent and received.
- With a device as TCP client, set the following values:
  - IP address of the TCP server, normally the IP address of the control or the host computer
  - Port number of the TCP server
  - Timeout for the wait time for an answer from the server
  - Repetition time for renewed communication attempt following a timeout
- With a device as TCP server, set the following values:
  - Port number for the communication of the device with the TCP clients

The corresponding adjustment options can be found in the webConfig tool:
Configuration > Communication > Host communication

8.2.4 Address Link Label

The "Address Link Label" is an additional stick-on label that is affixed to the device.

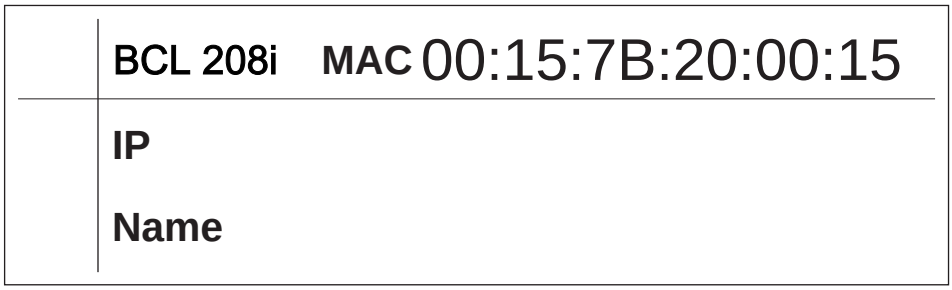

Fig. 8.1: Example: "Address Link Label"

- The "Address Link Label" contains the MAC address (Media Access Control address) of the device and makes it possible to enter the IP address and the device name manually.

  The area of the "Address Link Label" on which the MAC address is printed can be separated from the remainder of the stick-on label if necessary using the perforation.

- The "Address Link Label" can be removed from the device and affixed in the installation and layout diagrams to designate the device.
- Once it is affixed in the documents, the "Address Link Label" establishes a unique reference between the mounting location, the MAC address or the device, and the associated control program.

  There is no need for time-consuming searching, reading, and manually writing down of the MAC addresses of every device that is installed in the system.

	NOTICE
	Each device with Ethernet interface is uniquely identified via the MAC address assigned during production. The MAC address is also listed on the name plate of the device. If multiple devices are commissioned in a system, the MAC address of each installed device must be correctly assigned, e.g., during programming of the control.

↳ Remove the "Address Link Label" from the device.

↳ If necessary, add the IP address and the device name to the "Address Link Label".

↳ Affix the "Address Link Label" in the documents, e.g., in the installation diagram, according to the position of the device.

8.3 Performing further settings

8.3.1 Decoding and processing the read data

The device offers the following possibilities:

- Setting the number of labels to be decoded for each reading gate (0 … 64). This is done via the *Max. no. of labels* parameter.
- Definition of up to 8 different code types. Labels that match one of the defined code types are decoded. Further parameters can be set for each code type, e.g.
  - The code type (*symbology*)
  - The *number of digits*
    Either the number of digits, e.g. 10, 12, 24, or a range (*Interval mode*) and up to three additional numbers of digits (e.g. 2 … 10, 12, 16, 26)
  - The *Reading reliability*: the set value specifies how many times a label must be read and decoded with the same result before the result is accepted as valid.
  - Additional code type specific settings (in the webConfig tool only)
  - *Check digit method* used for decoding as well as the type of *check digit transmission* for the output of the read result.
    Standard: corresponds to the standard for the selected code type/symbology
    Not standard

↳ Define at least one code type with the desired settings in the webConfig tool:
Configuration -> Decoder

Data processing via the webConfig tool

In the **Data** and **Output** submenus of the **Configuration** main menu, the webConfig tool provides extensive data processing options to adapt the functionality of the device to the specific reading task:

- Data filtering and segmentation in the **Data** submenu:
  - Data filtering according to characteristics for handling identical bar code information
  - Data segmentation for differentiating between identifier and content of the read data
  - Data filtering according to content and/or identifier in order to suppress the output of bar codes with specific content/identifiers
  - Completeness inspection of the read data
- Sorting and formatting the output data in the **Output** submenu:
  - Configuration of up to 3 different sorting criteria. Sorting by physical data and content of the read bar codes.
  - Formatting of the data output for the HOST.

8.3.2 Control of the decoding

In general, decoding is controlled via the configurable switching inputs/outputs. The corresponding connection to the PWR / SWIO interface must be configured as a switching input for this purpose (see chapter 6.1 "PWR/SWIO (supply voltage, switching input and switching output)").

Controlling decoding via a switching input:

- Start/stop decoding
- Start decoding and then stop decoding after a configurable time period
- Read in a reference code
- Start automatic code type configuration (AutoConfig)

✎ Connect the required control devices, e.g., photoelectric sensor, proximity switch, etc., to the device (see chapter 6 "Electrical connection").

✎ Configure the connected switching input according to your requirements.

⇨ Configure the switching behavior.

⇨ webConfig tool: **Configuration > Device > Switching inputs/outputs**

	NOTICE
	Alternatively, you can activate decoding using the '+' online command and deactivate it using the '–' online command (see chapter 9 "Online commands").

Advanced decoding control in the webConfig tool

The webConfig tool provides advanced functions, in particular for deactivating decoding. These may be accessed via the **Control** submenu of the **Configuration** main menu. You can:

- Activate decoding automatically (delayed).
- Stop decoding after a maximum reading gate time.
- Stop decoding via the completeness mode, if:
  - The maximum number of bar codes to be decoded has been decoded.
  - A positive reference code comparison has taken place.

8.3.3 Control of the switching output

By using the switching inputs/outputs of the device, external event-controlled functions can be implemented without assistance from the superior process control. For this purpose, the respective connection at the PWR / SWIO interfaces must be configured as a switching output (see chapter 6.1 "PWR/SWIO (supply voltage, switching input and switching output)").

A switching output can, for example, be activated according to the following criteria:

- At the start/end of the reading gate
- Depending on the read result:
  - Reference code comparison positive/negative
  - Read result valid/invalid
- Depending on the state of the device:
  - Device ready/not ready
  - Data transmission active/not active
  - Active/standby
  - Error/no error

✎ Connect the required switching output (see chapter 6 "Electrical connection").

✎ Configure the connected switching output according to your requirements.

⇨ Configure the switching behavior.

⇨ webConfig tool: **Configuration > Device > Switching inputs/outputs**

8.3.4 Transfer configuration data

Transferring configuration data with the webConfig tool

With the webConfig tool, you can store complete device configurations on data carriers and transfer them from these to the device.

This storage of configuration data is especially useful if you want to store basic configurations which will require only minor changes.

The configuration data is saved in the webConfig tool using the buttons in the main menu **Configuration**.

Fig. 8.2: Saving configuration data in webConfig tool

9 Online commands

9.1 Overview of commands and parameters

Online commands can be used to send commands directly to the device for control and configuration. For this purpose, the bar code reader must be connected to a host or service computer via the interface. The described commands are sent via the host interface.

Online commands offer the following options for controlling and configuring the bar code reader:

- Control/decode the reading gate
- Read/write/copy parameters
- Carry out an automatic configuration
- Teach-in/set reference codes
- Call up error messages
- Query statistical device information
- Perform a software RESET and re-initialize the bar code reader

Syntax

Online commands consist of one or two ASCII characters followed by command parameters.

No separation characters may be entered between the command and the command parameter(s). Both small and capitalized letters can be used.

Example:

Command ’**CA**’:	autoConfig function
Parameter ’**+**’:	Activation
Transmitted is:	’**CA+**’

Notation

Commands, command parameters and returned data are enclosed between single quotation marks ’ ’ in the text of this manual.

Most online commands are acknowledged by the device and any requested data returned. For commands that are not acknowledged, command execution can be observed or monitored directly on the device.

9.2 General online commands

Software version number

Command	**’V’**
Description	Requests device version information
Parameter	None
Acknowledgment	Example: **’BCL 208i SM 110 V1.11.0 2020-09-01’** The first line contains the device type of the bar code reader, followed by the device version number and version date. The data which is actually displayed may vary from the values given here.

NOTICE

You can use this command to check whether the communication between PC and bar code reader is functional.

↳ If you do not receive an acknowledgment, please check the interface connections or the protocol.

Software reset

Command	'H'
Description	Carries out a software reset. The device is restarted and reinitialized, leaving it in the same state as when the supply voltage is switched on.
Parameter	None
Acknowledgment	'S' (start signal)

Code recognition

Command	'CC'		
Description	Detects an unknown bar code and outputs number of digits, code type, and code information to the interface, without storing the bar code in the parameter memory.		
Parameter	None		
Acknowledgment	'xx yyyy zzzzzz'		
	xx	Code type of the read code	
		'01'	2/5 Interleaved
		'02'	Code 39
		'03'	Code 32
		'06'	UPC (A, E)
		'07'	EAN
		'08'	Code 128, EAN 128
		'10'	EAN Addendum
		'11'	Codabar
		'12'	Code 93
		'13'	GS1 DataBar OMNIDIRECTIONAL
		'14'	GS1 DataBar LIMITED
		'15'	GS1 DataBar EXPANDED
	yy	Number of digits of the read code	
	zzzzzz	Contents of the decoded label. A ↑ appears if the label was not correctly read.	

autoConfig

Command	’CA’		
Description	Activates or deactivates the *autoConfig* function. Certain label reading parameters are programmed automatically in the setup by the labels which the bar code reader reads while the *autoConfig* function is active.		
Parameter	'+'	Activates *autoConfig*	
	'/'	Rejects the last code read	
	'-'	Deactivates *autoConfig* and stores the decoded data in the current parameter set	
Acknowledgment	’CSx’		
	x	Status	
		’0’	Valid **’CA’** command
		’1’	Invalid command
		’2’	autoConfig could not be activated
		’3’	autoConfig could not be deactivated
		’4’	Result could not be deleted
Response	’xx yyyy zzzzzz’		
	xx	Number of digits of the read code	
	yy	Code type of the read code	
		’01’	2/5 Interleaved
		’02’	Code 39
		’03’	Code 32
		’06’	UPC (A, E)
		’07’	EAN
		’08’	Code 128, EAN 128
		’10’	EAN Addendum
		’11’	Codabar
		’12’	Code 93
		’13’	GS1 DataBar OMNIDIRECTIONAL
		’14’	GS1 DataBar LIMITED
		’15’	GS1 DataBar EXPANDED
	zzzzzz	Contents of the decoded label. A ↑ appears if the label was not correctly read.	

Alignment mode

Command	’JP’	
Description	Activates or deactivates the alignment mode for simple mounting alignment of the device. After activating the function with **JP+**, the bar code reader constantly outputs status information on the serial interface. With this online command, the bar code reader is set to terminate the decoding after 100 successfully decoded labels and output the status information. Subsequently, the read process is reactivated automatically. In addition to the output of the status information, the laser beam is used to display the reading quality. Depending on how many read results could be extracted, the duration of the laser's "OFF" time increases. If the reading quality is high, the laser beam flashes in brief, regular intervals. The worse the decoder decodes, the longer the pauses become during which the laser is switched off. The flashing intervals become more and more irregular because the laser may, in total, be active for longer to extract more labels. The duration of the pauses has been stepped in such a way that they can be distinguished by the eye.	
Parameter	’+’	activates the alignment mode
	’-’	deactivates the alignment mode
Acknowledgment	’yyy zzzzzz’	
	yyy	Read quality in %. A high process availability is ensured at read qualities > 75 %.
	zzzzzz	Bar code information

Manual definition of the reference code

Command	’RS’		
Description	This command can be used to define a new reference code in the bar code reader by means of direct input via the serial interface or the Ethernet interface. The data is saved in the parameter set according to your input under reference code 1 through 2 and stored in the working buffer for direct further processing.		
Parameter	’RSyvxxzzzzzzzz’ **y**, **v**, **x** and **z** are placeholders (variables) for the actual input.		
	y	Def. reference code no.	
		’1’	(Code 1)
		’2’	(Code 2)
	v	Storage location for reference code:	
		’0’	RAM+EEPROM
		’3’	RAM only
	xx	Defined code type (see command 'CA')	
	z	Defined code information (1 … 63 characters)	
Acknowledgment	’RS=x’		
	x	Status	
		’0’	Valid **’Rx’** command
		’1’	Invalid command
		’2’	Insufficient memory for reference code
		’3’	Reference code has not been saved
		’4’	Reference code invalid
Example	Entry = ’RS130678654331’ Code 1 (1), RAM only (3), UPC (06), code information		

Reference code teach-in

Command	'RT'		
Description	This command enables a reference code to be defined quickly by reading an example label.		
Parameter	'RTy'		
	y	Function	
		'1'	Defines reference code 1
		'2'	Defines reference code 2
		'+'	Activates the definition of reference code 1 up to the value of Parameter no_of_labels
		'-'	Ends the teach event
Acknowledgment	The bar code reader responds with command **'RS'** and corresponding status (see command 'RS'). After a bar code has been read, it sends the result in the following format: '**RCyvxxzzzzz**' **y**, **v**, **x** and **z** are placeholders (variables) for the actual input.		
	y	Defined reference code no.	
		'1'	(Code 1)
		'2'	(Code 2)
	v	Storage location for reference code	
		'0'	RAM+EEPROM
		'3'	RAM only
	xx	Defined code type (see command 'CA')	
	z	Defined code information (1 … 63 characters)	

NOTICE

With this function, only code types are recognized that are identified using the *autoConfig* function or which were set in the set-up.

- After each reading via an 'RTy' command, explicitly switch off the function again since failure to do so will interfere with other commands as well as prevent execution of a new 'RTx' command.

Reading a reference code

Command	’RR’		
Description	The command reads out the reference code defined in the bar code reader. If no parameters are specified, all defined codes are output.		
Parameter	<reference code number>		
	’1’ … ’2’	Value range of reference code 1 to 2	
Acknowledgment	Output in the following format: ’**RCyvxxzzzzzz**’ If no reference codes are defined, nothing is entered for **zzzzzz**. **y**, **v**, **x** and **z** are placeholders (variables) for the actual input.		
	y	Defined reference code no.	
		’1’	(Code 1)
		’2’	(Code 2)
	v	Storage location for reference code	
		’0’	RAM+EEPROM
		’3’	RAM only
	xx	Defined code type (see command 'CA')	
	z	Defined code information (1 … 63 characters)	

9.3 Online commands for system control

Activate sensor input

Command	’+’
Description	The command activates configured decoding. This command is used to activate the reading gate. It remains active until it is deactivated by one of the following criteria: • Deactivation by a manual command • Deactivation by a switching input • Deactivation upon reaching the specified read quality (equal scans) • Deactivation by timeout • Deactivation upon reaching a preset number of scans without information
Parameter	None
Acknowledgment	None

Deactivate sensor input

Command	’-’
Description	The command deactivates configured decoding. This command can be used to deactivate the reading gate. Following deactivation, the read result is output. Because the reading gate was manually deactivated and, thus, no GoodRead criterion was met, a NoRead is output.
Parameter	None
Acknowledgment	None

9.4 Online commands for configuration of switching inputs/outputs

Activate switching output

Command	'OA'		
Description	Switching output SWO2 can be activated with this command. The logic state is output, i.e., an inverted logic is taken into account (e.g., inverted logic and a state of High corresponds to a voltage of 0 V at the switching output).		
Parameter	'OA<a>' <a> Selected switching output 2, unit (dimensionless)		
Acknowledgment	None		

Query the state of the switching output

Command	'OA'		
Description	The states of the switching output set by means of commands can be queried with this command. The logic state is output, i.e., an inverted logic is taken into account (e.g., inverted logic and a state of High corresponds to a voltage of 0 V at the switching output).		
Parameter	'OA?'		
Acknowledgment	'OA S1=<a>;S2=<a>'		
	<a>	State of the switching output	
		'0'	Low
		'1'	High
		'I'	Configuration as switching input
		'P'	Passive configuration

Set the state of the switching output

Command	'OA'		
Description	The state of switching output SWO2 can be set with this command. The logic state is output, i.e., an inverted logic is taken into account (e.g., inverted logic and a state of High corresponds to a voltage of 0 V at the switching output). You may also use only a selection of the existing switching inputs/outputs as long as these are listed in ascending order.		
Parameter	'OA [S1=<a>][;S2=<a>]'		
	<a>	State of the switching output	
		'0'	Low
		'1'	High
Acknowledgment	'OA=<aa>'		
	<aa>	Status acknowledgment, unit (dimensionless)	
		'00'	Ok
		'01'	Syntax error
		'02'	Parameter error
		'03'	Other error

Deactivate switching output

Command	’OD’
Description	Switching output 2 can be deactivated with this command. The logic state is output, i.e., an inverted logic is taken into account (e.g., inverted logic and a state of High corresponds to a voltage of 0 V at the switching output).
Parameter	’OD<a>’ <a> Selected switching output 2, unit (dimensionless)
Acknowledgment	None

9.5 Online commands for the parameter set operations

Copying parameter set

Command	’PC’		
Description	This command can only be used to copy parameter sets in their entirety. This can be used to replicate the three parameter sets default, permanent and operating parameters on the basis of one another. In addition, this command also be used to restore the factory settings.		
Parameter	’PC<Source type><Target type>		
	<Source type>	Parameter data set that is to be copied, unit [dimensionless]	
		’0’	Parameter data set in permanent memory
		’2’	Default or factory parameter set
		’3’	Operating parameter data set in volatile memory
	<Target type>	Parameter set into which the data is to be copied, unit [dimensionless]	
		’0’	Parameter data set in permanent memory
		’3’	Operating parameter data set in volatile memory
	Permissible combinations here include:		
	’03’	Copying the data set from the permanent memory to the operating parameter data set	
	’20’	Copying the operating parameter data set to the permanent parameter set memory	
	’30’	Copying the default parameters to the permanent memory and to the main memory	
Acknowledgment	’PS=<aa>’		
	<aa>	Status acknowledgment, unit (dimensionless)	
		’00’	Ok
		’01’	Syntax error
		’02’	Impermissible command length
		’03’	Reserved
		’04’	Reserved
		’05’	Reserved
		’06’	Impermissible combination, source type - target type

Request parameter data set of the bar code reader

Command	’PR’		
Description	The parameters of the bar code reader are grouped together in a parameter set and permanently stored in memory. There is one parameter set in permanent memory and one operating parameter set in volatile memory; in addition, there is a default parameter set (factory parameter set) for initialization. This command can be used to edit the first two parameter sets (in permanent and volatile memory). A check sum can be used for reliable parameter transfer.		
Parameter	’PR<BCC type><PS type><Address><Data length>[<BCC>]’		
	<BCC type>	Check-digit function during transmission, unit [dimensionless]	
		’0’	Not used
		’3’	BCC mode 3
	<PS type>	Memory from which the values are to be read, unit [dimensionless]	
		’0’	Parameter values stored in the flash memory
		’1’	Reserved
		’2’	Default values
		’3’	Operating values in RAM
	<Address>’aaaa’	Relative address of the data within the data set, four-digit, unit [dimensionless]	
	<Data length>’bbbb’	Length of the parameter data to be transferred, four-digit, unit [length in bytes]	
	<BCC>	Check sum calculated as specified under BCC type	
Acknowledgment positive	PT<BCC-Type><PS-Type><Status><Start><Parameter Value Address><Parameter Value Address+1>…[;<Address><Parameter Value Address>][<BCC>]		
	<BCC type>	Check-digit function during transmission, unit [dimensionless]	
		’0’	Not used
		’3’	BCC mode 3
	<PS type>	Memory from which the values are to be read, unit [dimensionless]	
		’0’	Parameter values stored in flash memory
		’2’	Default values
		’3’	Operating values in RAM
	<Status>	Mode of parameter processing, unit [dimensionless]	
		’0’	No further parameters
		’1’	Additional parameters follow
	<Start>’aaaa’	Relative address of the data within the data set, four-digit, unit [dimensionless]	
	<P.value A.>	Parameter value of the parameter stored at this address; the parameter set data 'bb' is converted from HEX format to a 2-byte ASCII-format for transfer.	
	<BCC>	Check sum calculated as specified under BCC type,	

Command	'PR'		
Acknowledgment negative	'PS=<aa>'		
	Parameter reply:		
	<aa>	Status acknowledgment, unit [dimensionless]	
		'01'	Syntax error
		'02'	Impermissible command length
		'03'	Impermissible value for checksum type
		'04'	Invalid check sum received
		'05'	Impermissible number of data requested
		'06'	Requested data does not (any longer) fit in the transmission buffer
		'07'	Impermissible address value
		'08'	Read access after end of data set
		'09'	Impermissible QPF data set type

Determining parameter data set difference to default parameters

Command	'PD'		
Description	This command outputs the difference between the default parameter set and the operating parameter set or the difference between the default parameter set and the permanent parameter set. Comment: The reply supplied by this command can e.g. be directly used for programming a device with factory settings, whereby this device receives the same configuration as the device on which the PD-sequence was executed.		
Parameter	'PD<P.set1><P.set2>'		
	<P.set1>	Parameter data set that is to be copied, unit [dimensionless]	
		'0'	Parameter data set in permanent memory
		'2'	Default or factory parameter set
	<P.set2>	Parameter set into which the data is to be copied, unit [dimensionless]	
		'0'	Parameter data set in permanent memory
		'3'	Operating parameter data set in volatile memory
	Permissible combinations here include:		
		'20'	Output of the parameter differences between the default and the permanently saved parameter set
		'23'	Output of the parameter differences between the default parameter set and the operating parameter set saved in volatile memory
		'03'	Output of the parameter differences between the permanent parameter set and the operating parameter set saved in volatile memory

Command	’PD’		
Acknowledgment positive	PT<BCC><PS-Type><Status><Address><Parameter Value Address><Parameter Value Address+1>… [;<Address><Parameter Value Address>]		
	<BCC>	Check-digit function during transmission, unit [dimensionless]	
		’0’	No check digits
		’3’	BCC mode 3
	<PS type>	Memory from which the values are to be read, unit [dimensionless]	
		’0’	Values stored in flash memory
		’3’	Operating values stored in RAM
	<Status>	Mode of parameter processing, unit [dimensionless]	
		’0’	No further parameters
		’1’	Additional parameters follow
	<Address>’aaaa’	Relative address of the data within the data set, four-digit, unit [dimensionless]	
	<P.value>	Parameter value of the parameter stored at this address. The 'bb' parameter set data is converted for transmission from HEX format to a 2-byte-ASCII format.	
Acknowledgment negative	’PS=<aa>’		
	Parameter reply:		
	<aa>	Status acknowledgment, unit [dimensionless]	
		’0’	No difference
		’1’	Syntax error
		’2’	Impermissible command length
		’6’	Impermissible combination, parameter set 1 and parameter set 2
		’8’	Invalid parameter set

Writing parameter set

Command	’PT’		
Description	The parameters of the bar code reader are grouped together in a parameter set and permanently stored in memory. There is one parameter set in permanent memory and one operating parameter set in volatile memory; in addition, there is a default parameter set (factory parameter set) for initialization. This command can be used to edit the first two parameter sets (in permanent and volatile memory). A check sum can be used for reliable parameter transfer.		
Parameter	’PT<BCC type><PS type>Status><Addr.>P. value addr.><P. value addr+1>… [;<Addr.><P. value addr.>][<BCC>]’		
	<BCC type>	Check-digit function during transmission, unit [dimensionless]	
		’0’	No check digits
		’3’	BCC mode 3
	<PS type>	Memory from which the values are to be read, unit [dimensionless]	
		’0’	Parameter values stored in the flash memory
		’3’	Operating values in RAM
	<Status>	Mode of parameter processing, without function here, unit [dimensionless]	
		’0’	No reset after parameter change, no further parameters
		’1’	No reset after parameter change, additional parameters follow
		’2’	With reset after parameter change, no further parameters
		’6’	Set parameters to factory setting, no further parameters
		’7’	Set parameters to factory settings, lock all code types; the code-type setting must follow in the command.
	<Address>’aaaa’	Relative address of the data within the data set, four-digit, unit [dimensionless]	
	<P. value>’bb’	Parameter value of the parameter stored at this address. The bb parameter set data is converted from HEX format to a 2-byte-ASCII format for transfer.	
	<BCC>	Check sum calculated as specified under BCC type	
Acknowledgment	’PS=<aa>’		
	Parameter reply:		
	<aa>	Status acknowledgment, unit [dimensionless]	
		’01’	Syntax error
		’02’	Impermissible command length
		’03’	Impermissible value for checksum type
		’04’	Invalid check sum received
		’05’	Impermissible data length
		’06’	Invalid data (parameter limits violated)
		’07’	Impermissible start address
		’08’	Invalid parameter set
		’09’	Invalid parameter type

10 Care, maintenance and disposal

Cleaning

↳ Clean the device with a soft cloth; use a cleaning agent (commercially available glass cleaner) if necessary.

	NOTICE
	Do not use aggressive cleaning agents! ↳ Do not use aggressive cleaning agents such as thinner or acetone for cleaning the device.

Maintenance

Usually, the bar code reader does not require any maintenance by the operator.

Repairs to the device must only be carried out by the manufacturer.

↳ For repairs, contact your responsible Leuze subsidiary or Leuze customer service (see chapter 12 "Service and support").

Disposing

↳ For disposal observe the applicable national regulations regarding electronic components.

11 Diagnostics and troubleshooting

11.1 Error signaling via LED

Tab. 11.1: Meaning of the LED indicators

Error	Possible error cause	Measures
PWR LED		
Off	• No supply voltage connected to the device • Hardware error	• Check supply voltage • Contact Leuze customer service (Service and support)
Red, continuous light	Device error/parameter enable	Contact Leuze customer service (Service and support)
Red, flashing	Warning set Temporary operating fault	Query diagnostic data and carry out the resulting measures
Orange, continuous light	Device in Service mode	Reset Service mode with webConfig tool
NET LED		
Off	• No supply voltage connected to the device • Ethernet host communication not yet activated • Hardware error	• Check supply voltage • Activate Ethernet host communication • Contact Leuze customer service (Service and support)
Red, continuous light	No communication	• Check interface
Red, flashing	• Communication error	• Check interface

11.2 Interface error

Tab. 11.2: Interface error

Error	Possible error cause	Measures
No communication via the Ethernet interface	• Incorrect wiring • Different protocol settings • Protocol not released	• Check wiring • Check protocol settings • Activate TCP/IP or UDP

Sporadic errors at the Ethernet interface	• Incorrect wiring
	• Effects due to EMC
	• Overall network expansion exceeded
		• Check wiring
		  • In particular, check wire shielding
		  • Check the cable used
		• Check shielding (shield covering in place up to the clamping point)
		• Check grounding concept and connection to functional earth (FE)
		• Avoid EMC coupling caused by power cables laid parallel to device lines.
		• Check max. network expansion as a function of the max. cable lengths

12 Service and support

24-hour on-call service at:

+49 7021 573-0

Service hotline:

+49 7021 573-123

Monday to Friday 8.00 a.m. to 5.00 p.m. (UTC+1)

E-mail:

service.identify@leuze.de

Repair service and returns:

Procedure and Internet form can be found at

www.leuze.com/repair

Return address for repairs:

Service center

Leuze electronic GmbH + Co. KG

In der Braike 1

D-73277 Owen / Germany

What to do should servicing be required?

NOTICE

Please use this chapter as a master copy should servicing be required!

↳ Enter the contact information and fax this form together with your service order to the fax number given below.

Customer data (please complete)

Device type:	
Serial number:	
Firmware:	
Status of LEDs:	
Error description:	
Company:	
Contact person/department:	
Phone (direct dial):	
Fax:	
Street/No:	
ZIP code/City:	
Country:	

Leuze Service fax number:

+49 7021 573 - 199

13 Technical data

13.1 General specifications

Optics

Light source / Wavelength	Laser / 655 nm (visible red light)
Laser class	1 (acc. to IEC/EN 60825-1:2014 and 21 CFR 1040.10 with Laser Notice No. 56)
Max. output power (peak)	≤ 1.8 mW
Impulse duration	≤ 150 µs
Beam exit	Lateral zero position at an angle of 90°
Beam deflection	Via rotating polygon wheel (horizontal) and deflecting mirror (vertical)
Useful opening angle	Max. 60°
Adjustment range	Max. ±10°, adjustable via software
Scanning rate	1000 scans/s
Optics / resolution	M optics: 0.2 … 0.5 mm
Reading distance / reading field width	See reading fields

Code specifications

Code types	2/5 Interleaved Code 39 Code 128 EAN 128 EAN/UPC EAN Addendum Codabar Code 93 GS1 DataBar
Bar code contrast (PCS)	≥ 60 %
Ambient light tolerance	2000 lx (on the bar code)
Number of bar codes per scan	3

Interfaces

Interface type	1x Ethernet on M12 (D)
Protocols	Ethernet TCP / IP (client/server) UDP
Baud rate	10/100 MBaud
Switching input / switching output	• 1 switching input: 18 … 30 V DC depending on supply voltage, configurable I max. = 8 mA • 1 switching output: 18 … 30 V DC depending on supply voltage, configurable output current I max. = 60 mA (short-circuit proof) The switching inputs/outputs are protected against polarity reversal.

Electrical equipment

Supply voltage	18 … 30 V DC (PELV, Class 2)
Power consumption	≤ 4 W
VDE protection class	III

CAUTION

UL applications!

For UL applications, use is only permitted in Class 2 circuits in accordance with the NEC (National Electric Code).

NOTICE

Protective Extra Low Voltage (PELV)!

The device is designed in accordance with protection class III for supply with PELV (Protective Extra-Low Voltage).

Display elements

LEDs	3 LEDs for power (PWR), bus state (NET) and link state (LINK)

Mechanical data

Degree of protection	IP65
Connection type	Connected cable, 0.9 m, M12 connector, 5-pin Connected cable, 0.7 m, M12 connector, 4-pin
Weight	400 g incl. cable
Dimensions (H x W x D)	38 x 92 x 83 mm (without cable)
Housing	Diecast aluminum

Environmental data

Ambient temperature Operation Storage	 0 C … +40 °C -20 °C … +70 °C
Relative humidity	Max. 90 % (non-condensing)
Vibration	IEC 60068-2-6, test Fc
Shock	IEC 60068-2-27, test Ea
Continuous shock	IEC 60068-2-29, test Eb
Electromagnetic compatibility	EN 61000-6-3:2007-01 + A1:2011-03/AC:2012-08 EN 61000-6-2:2005-08 + AC:2005-09

Conformity, approvals

Conformity	CE

13.2 Reading fields

13.2.1 Bar code characteristics

NOTICE

The size of the bar code module influences the maximum reading distance and the width of the reading field. Therefore, when selecting a mounting location and/or the bar code label, take into account the different reading characteristics of the scanner with various bar code modules.

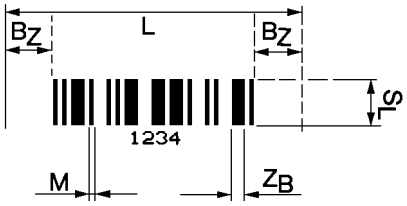

L	Code length: The length of the bar code in mm including the start and stop characters. The quiet zone is included depending on the code definition.
S_L	Bar length: height of the elements in mm
M	Module: The narrowest line or space of a bar code in mm
Z_B	Wide character: Wide bars and gaps are a multiple (ratio) of the module.
	Z_B = Module x Ratio (Normal Ratio 1 : 2.5)
B_Z	Quiet zone: The quiet zone should be at least 10 times the module, but not less than 2.5 mm.

Fig. 13.1: The most important characteristics of a bar code

The range in which the bar code can be read by the bar code reader, the so-called reading field, depends on the quality of the printed bar code and its dimensions. Therefore, above all, the module of a bar code is decisive for the size of the reading field.

NOTICE

A rule of thumb: The smaller the module of the bar code is, the smaller the maximum reading distance and reading field width will be.

13.2.2 Raster scanner

A raster variant is also available in the BCL 200i series. The BCL 200i as a raster scanner projects 8 scan lines which vary depending on the reading distance from the raster aperture.

Tab. 13.1: Raster line cover dependent on the distance

Distance [mm] starting at the zero position	50	100	200	250
Raster-line cover [mm] of all raster lines	12	17	27	33

NOTICE

There may not be two or more bar codes in the raster detection range simultaneously.

13.2.3 Reading field curves

NOTICE	
	Please note that the actual reading fields are also influenced by factors such as labeling material, printing quality, reading angle, printing contrast etc., and may thus deviate from the reading fields specified here. The origin of the read distance always refers to the front edge of the housing of the beam exit.

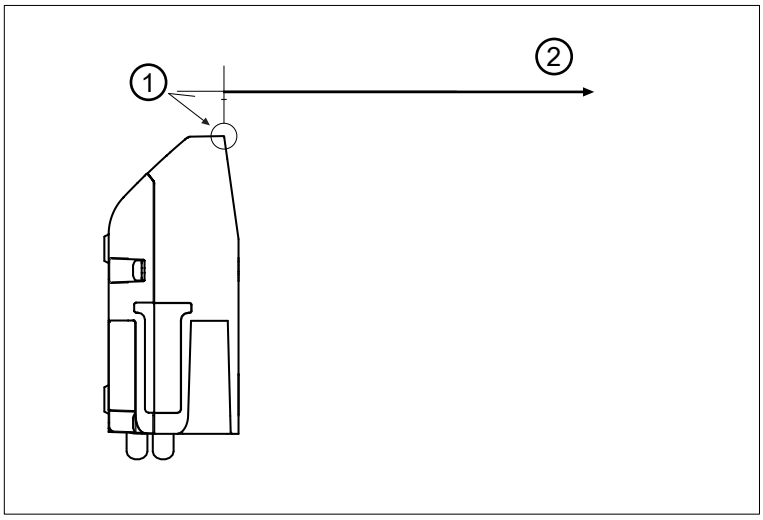

1 Zero position
2 Distance acc. to reading field curves

Fig. 13.2: Zero position of the reading distance

Tab. 13.2: Reading conditions for the reading field curves

Bar code type	2/5 Interleaved
Ratio	1:2.5
ANSI specification	Class A
Reading rate	> 75 %

Reading field curve BCL 248i S/R1 M 100, optics: Medium Density

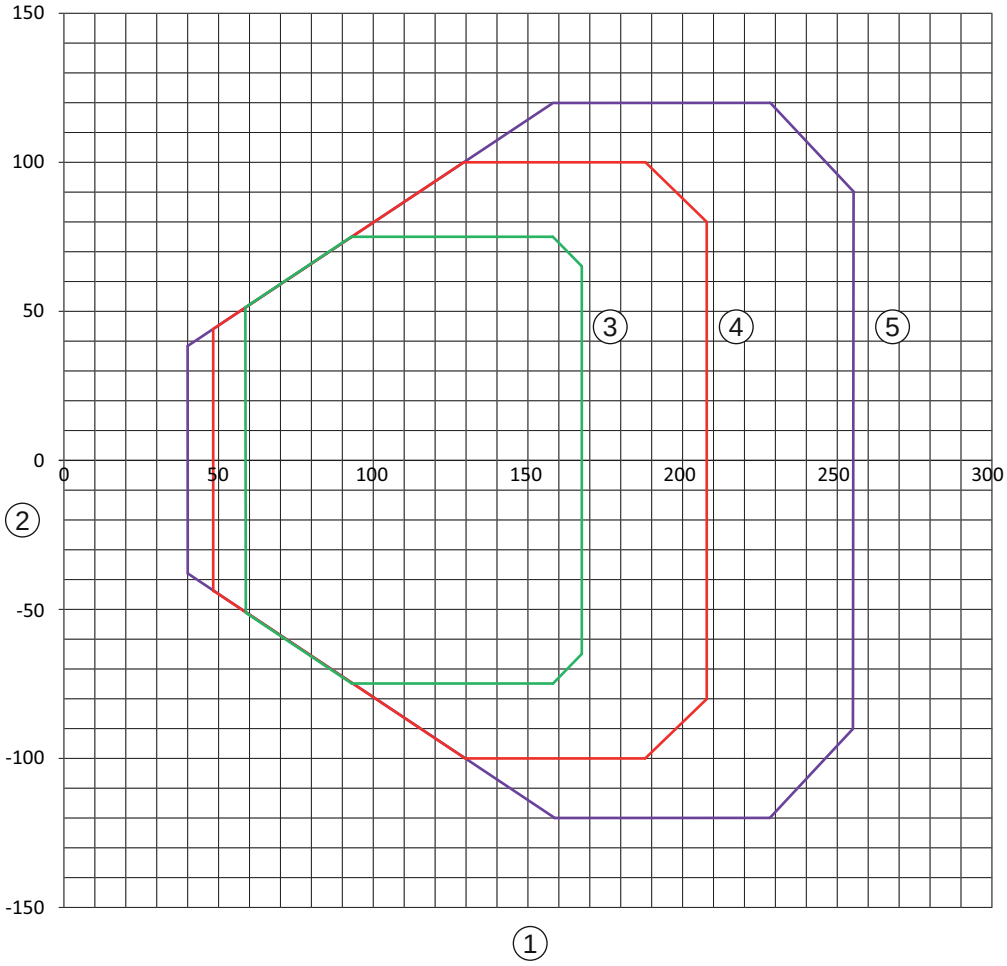

1	Reading distance [mm]	3	m = 0.2
2	Reading field width [mm]	4	m = 0.3
		5	m = 0.5

Fig. 13.3: "Medium Density" reading field curve for line scanner with deflecting mirror

The reading field curves apply for the reading conditions stated above.

13.3 Dimensioned drawings

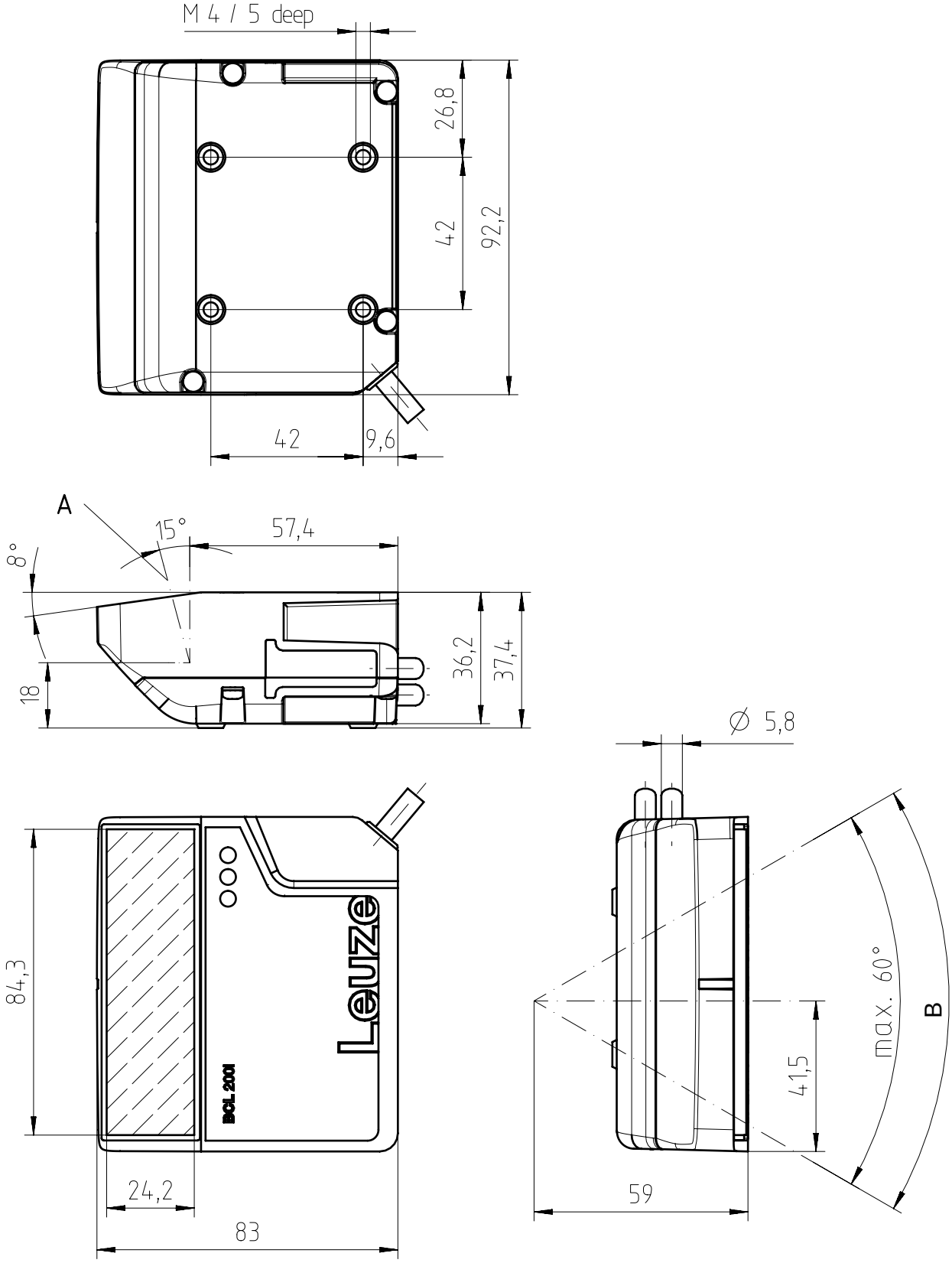

all dimensions in mm

A Optical axis

B Deflection angle of the laser beam: ± 30°

Fig. 13.4: Dimensioned drawing of BCL 200i

14 Order guide and accessories

14.1 Part number code

BCL 2xxiC S M 110 Fxxx

BCL	Operating principle: bar code reader
2	Series: BCL 200i
xx	Interface: 08: Ethernet 48: PROFINET 58: EtherNet/IP
iC	I: Integrated fieldbus technology C: IoT / Industry 4.0 connectivity
S	Scanning principle: S: Line scanner R1: Raster scanner
M	Optics: M: Medium distance (medium density)
11**0**	110: Lateral beam exit
Fxxx	Cloud connectivity for IoT / Industry 4.0 with 3-digit code

NOTICE

A list with all available device types can be found on the Leuze website at **www.leuze.com**.

14.2 Type overview

Tab. 14.1: Type overview with Ethernet interface

Type designation	Description	Part no.
BCL 208i SM 110	Single line scanner with M optics	50143209
BCL 208i R1M 110	Raster scanner with M optics	50143210

14.3 Accessories – connection technology

Tab. 14.2: Connector for the BCL 200i bar code reader

Type designation	Description	Part no.
KD 095-5A	M12 axial socket for voltage supply, shielded, user-configurable	50020501
D-ET1	RJ45 connector, user-configurable	50108991
S-M12A-ET	M12 connector, axial, D-coded, user-configurable	50112155
KDS ET-M12 / RJ45 W–4P	Adapter of M12, D-coded, to RJ45 socket	50109832

Tab. 14.3: Connection cables for the BCL 200i bar code reader

Type designation	Description	Part no.
M12 socket (5-pin, A-coded), axial connector, open cable end, unshielded		
KD U-M12-5A-V1-020	PWR connection cable, length 2 m	50132077
KD U-M12-5A-V1-050	PWR connection cable, length 5 m	50132079
KD U-M12-5A-V1-100	PWR connection cable, length 10 m	50132080
KD U-M12-5A-V1-300	PWR connection cable, length 30 m	50132432

Tab. 14.4: Interconnection cables for the BCL 200i bar code reader

Type designation	Description	Part no.
M12 connector (4-pin, D-coded), axial connector to RJ-45 connector, shielded, UL		
KSS ET-M12-4A-RJ45-A-P7-020	Ethernet interconnection cable to RJ45, length 2 m	50135080
KSS ET-M12-4A-RJ45-A-P7-050	Ethernet interconnection cable to RJ45, length 5 m	50135081
KSS ET-M12-4A-RJ45-A-P7-100	Ethernet interconnection cable to RJ45, length 10 m	50135082
KSS ET-M12-4A-RJ45-A-P7-150	Ethernet interconnection cable to RJ45, length 15 m	50135083
KSS ET-M12-4A-RJ45-A-P7-300	Ethernet interconnection cable to RJ45, length 30 m	50135084

14.4 Accessories – mounting systems

Tab. 14.5: Mounting devices for the BCL 200i bar code reader

Type designation	Description	Part no.
BT 56	Mounting device for rod	50027375
BT 56 - 1	Mounting device for rod	50121435
BT 59	Mounting bracket for groove mounting	50111224
BT 300 W	Mounting bracket	50121433
BT 300 - 1	Mounting device for rod	50121434

14.5 Accessories – Reflectors and reflective tapes

Tab. 14.6: Reflector for AutoReflAct

Type designation	Description	Part no.
REF 4-A-100x100	Reflective tape as reflector for AutoReflAct operation	50106119

15 EC Declaration of Conformity

The bar code readers of the BCL 200i series have been developed and manufactured in accordance with the applicable European standards and directives.

16 Appendix

16.1 ASCII character set

ASCII	Dec.	Hex.	Oct.	Designation	Meaning
NUL	0	00	0	ZERO	Zero
SOH	1	01	1	START OF HEADING	Start of heading
STX	2	02	2	START OF TEXT	Start of text characters
ETX	3	03	3	END OF TEXT	Last character of text
EOT	4	04	4	END OF TRANSMISS.	End of transmission
ENQ	5	05	5	ENQUIRY	Request for data trans.
ACK	6	06	6	ACKNOWLEDGE	Positive acknowledgment
BEL	7	07	7	BELL	Bell signal
BS	8	08	10	BACKSPACE	Backspace
HT	9	09	11	HORIZ. TABULATOR	Horizontal tabulator
LF	10	0A	12	LINE FEED	Line feed
VT	11	0B	13	VERT. TABULATOR	Vertical tabulator
FF	12	0C	14	FORM FEED	Form feed
CR	13	0D	15	CARRIAGE RETURN	Carriage return
SO	14	0E	16	SHIFT OUT	Shift out
SI	15	0F	17	SHIFT IN	Shift in
DLE	16	10	20	DATA LINK ESCAPE	Data link escape
DC1	17	11	21	DEVICE CONTROL 1	Device control character 1
DC2	18	12	22	DEVICE CONTROL 2	Device control character 2
DC3	19	13	23	DEVICE CONTROL 3	Device control character 3
DC4	20	14	24	DEVICE CONTROL 4	Device control character 4
NAK	21	15	25	NEG. ACKNOWLEDGE	Negative acknowledge
SYN	22	16	26	SYNCHRONOUS IDLE	Synchronization
ETB	23	17	27	EOF TRANSM. BLOCK	End of data transmission block
CAN	24	18	30	CANCEL	Invalid
EM	25	19	31	END OF MEDIUM	End of medium
SUB	26	1A	32	SUBSTITUTE	Substitution
ESC	27	1B	33	ESCAPE	Escape
FS	28	1C	34	FILE SEPARATOR	File separator
GS	29	1D	35	GROUP SEPARATOR	Group separator
RS	30	1E	36	RECORD SEPARATOR	Record separator
US	31	1F	37	UNIT SEPARATOR	Unit separator
SP	32	20	40	SPACE	Space
!	33	21	41	EXCLAMATION POINT	Exclamation point
"	34	22	42	QUOTATION MARK	Quotation mark
#	35	23	43	NUMBER SIGN	Number sign
$	36	24	44	DOLLAR SIGN	Dollar sign
%	37	25	45	PERCENT SIGN	Percent sign

ASCII	Dec.	Hex.	Oct.	Designation	Meaning
&	38	26	46	AMPERSAND	Ampersand
’	39	27	47	APOSTROPHE	Apostrophe
(	40	28	50	OPEN. PARENTHESIS	Open parenthesis
)	41	29	51	CLOS. PARENTHESIS	Closed parenthesis
*	42	2A	52	ASTERISK	Asterisk
+	43	2B	53	PLUS	Plus sign
,	44	2C	54	COMMA	Comma
-	45	2D	55	HYPHEN (MINUS)	Hyphen
.	46	2E	56	PERIOD (DECIMAL)	Period (decimal)
/	47	2F	57	SLANT	Slant
0	48	30	60	0	Number
1	49	31	61	1	Number
2	50	32	62	2	Number
3	51	33	63	3	Number
4	52	34	64	4	Number
5	53	35	65	5	Number
6	54	36	66	6	Number
7	55	37	67	7	Number
8	56	38	70	8	Number
9	57	39	71	9	Number
:	58	3A	72	COLON	Colon
;	59	3B	73	SEMICOLON	Semicolon
<	60	3C	74	LESS THAN	Less than
=	61	3D	75	EQUALS	Equals
>	62	3E	76	GREATER THAN	Greater than
?	63	3F	77	QUESTION MARK	Question mark
@	64	40	100	COMMERCIAL AT	Commercial AT
A	65	41	101	A	Capital letter
B	66	42	102	B	Capital letter
C	67	43	103	C	Capital letter
D	68	44	104	D	Capital letter
E	69	45	105	E	Capital letter
F	70	46	106	F	Capital letter
G	71	47	107	G	Capital letter
H	72	48	110	H	Capital letter
I	73	49	111	I	Capital letter
J	74	4A	112	J	Capital letter
K	75	4B	113	K	Capital letter
L	76	4C	114	L	Capital letter
M	77	4D	115	M	Capital letter

ASCII	Dec.	Hex.	Oct.	Designation	Meaning
N	78	4E	116	N	Capital letter
O	79	4F	117	O	Capital letter
P	80	50	120	P	Capital letter
Q	81	51	121	Q	Capital letter
R	82	52	122	R	Capital letter
S	83	53	123	S	Capital letter
T	84	54	124	T	Capital letter
U	85	55	125	U	Capital letter
V	86	56	126	V	Capital letter
W	87	57	127	W	Capital letter
X	88	58	130	X	Capital letter
Y	89	59	131	Y	Capital letter
Z	90	5A	132	Z	Capital letter
[	91	5B	133	OPENING BRACKET	Opening bracket
\	92	5C	134	REVERSE SLANT	Reverse slant
]	93	5D	135	CLOSING BRACKET	Closing bracket
^	94	5E	136	CIRCUMFLEX	Circumflex
_	95	5F	137	UNDERSCORE	Underscore
`	96	60	140	GRAVE ACCENT	Grave accent
a	97	61	141	a	Lower case letter
b	98	62	142	b	Lower case letter
c	99	63	143	c	Lower case letter
d	100	64	144	d	Lower case letter
e	101	65	145	e	Lower case letter
f	102	66	146	f	Lower case letter
g	103	67	147	g	Lower case letter
h	104	68	150	h	Lower case letter
i	105	69	151	i	Lower case letter
j	106	6A	152	j	Lower case letter
k	107	6B	153	k	Lower case letter
l	108	6C	154	l	Lower case letter
m	109	6D	155	m	Lower case letter
n	110	6E	156	n	Lower case letter
o	111	6F	157	o	Lower case letter
p	112	70	160	p	Lower case letter
q	113	71	161	q	Lower case letter
r	114	72	162	r	Lower case letter
s	115	73	163	s	Lower case letter
t	116	74	164	t	Lower case letter
u	117	75	165	u	Lower case letter

ASCII	Dec.	Hex.	Oct.	Designation	Meaning
v	118	76	166	v	Lower case letter
w	119	77	167	w	Lower case letter
x	120	78	170	x	Lower case letter
y	121	79	171	y	Lower case letter
z	122	7A	172	z	Lower case letter
{	123	7B	173	OPENING BRACE	Opening brace
|	124	7C	174	VERTICAL LINE	Vertical line
}	125	7D	175	CLOSING BRACE	Closing brace
~	126	7E	176	TILDE	Tilde
DEL	127	7F	177	DELETE (RUBOUT)	Delete

16.2 Bar code sample

Module 0.3

Modul 0,3

1122334455

Modul 0,3

135AC

Modul 0,3

A1213314A

Modul 0,3

abcde

Modul 0,3

leuze

SC 2

1 23456 78901 2

SC 3

3456 7890

SC 0 S

77889

1 122334 455666

(01) 0 0000123 45678 4

Fig. 16.1: Bar code sample labels (module 0.3)

Module 0.5

Modul 0,5

6677889900

Modul 0,5

246BD

Modul 0,5

A1516617A

Modul 0,5

fghij

Modul 0,5

LEUZE

SC 4

0 98765 43219 8

SC 6

9876 5430

SC 2

0 099887 766550 44332

Fig. 16.2: Bar code sample labels (module 0.5)