Bar Code Reader BCL 21/22 with Integrated Decoder and Connector Unit MA 2 / MA 4...

Technical Description

ПРОМЭЛЕКТРОНИКА / sales@prom-elec.com

© All rights reserved, especially the right of reproduction and translation. Copying or reproductions in any form require the written consent of Leuze electronic GmbH + Co. KG.
Changes reflecting technical improvements may be made.

1 General Information ... 5

1.1 Explanation of Symbols ... 5

1.2 Declaration of Conformity ... 5

2 Safety Notices ... 6

2.1 Safety Standards ... 6

2.2 Intended Use ... 6

2.3 Working Safely ... 7

3 Description ... 9

3.1 The Bar Code Readers BCL 21/22 ... 9

3.1.1 Networking ... 10

4 Specifications ... 12

4.1 General Specifications BCL 21/22 ... 12

4.2 LED indicators ... 13

4.3 Dimensioned and Connection Drawings ... 14

4.4 Optical Data ... 15

4.4.1 Type overview ... 15

4.4.2 Optics variants and reading fields ... 19

5 Accessories / Order Designation ... 22

5.1 Accessories ... 22

5.1.1 Connector units MA 2/MA 4… ... 24

5.1.2 Fastening Accessories ... 30

6 Installation ... 31

6.1 Storage, Transportation ... 31

6.2 Mounting ... 32

6.2.1 Device Arrangement ... 33

6.3 Connection ... 34

6.3.1 Connection BCL 21/22 stand alone ... 34

6.3.2 Connection BCL 21 with MA 2/MA 4… (RS 485) ... 36

6.3.3 Wire Lengths and Shielding ... 46

6.4 Disassembling, Packing, Disposing ... 46

7 Commissioning ... 47

7.1 Measures to be performed prior to the initial commissioning ... 47

7.2 Function Test ... 48

7.3 Setting the Parameters ... 49

7.3.1 Service Operating Mode ... 49

8 Operation ... 51
8.1 Display Elements ... 51
8.2 Error Handling ... 51

9 Communicating with the Device ... 52
9.1 Installing the "BCLConfig"-software ... 52

10 Important Parameters ... 54
10.1 Code menu ... 54
10.1.1 Properties of the Code menu ... 55
10.2 Output menu ... 56
10.3 Control ... 57
10.4 Communication ... 58
10.4.1 Communication properties ... 59
10.5 Reference code ... 60
10.6 Switching input ... 61
10.7 Switching output ... 62

11 Online commands ... 63
11.1 Overview of Commands and Parameters ... 63
11.1.1 General 'Online' Commands ... 64
11.1.2 ’Online’ Commands for System Control ... 71
11.1.3 ’Online’ Commands for System Checking ... 72
11.1.4 ’Online’ command for querying error messages ... 74

12 Maintenance ... 75
12.1 General Maintenance Information ... 75
12.2 Repairs, Servicing ... 75

13 Appendix ... 76
13.1 ASCII Table ... 76
13.2 Example Bar Code Label Types ... 80
13.2.1 Module 0.3 ... 80
13.2.2 Module 0.5 ... 81
13.3 Declaration of Conformity BCL 21/22 ... 82

Figure 2.1: Attachment of the sticky labels with warning notices at the BCL 21/22 8
Figure 3.1: BCL 21/22 device construction 9
Figure 3.2: Networking possibilities using the multiNet plus (BCL 21) 10
Table 4.1: General Specifications 12
Table 4.2: LED indicators 13
Figure 4.1: Dimensioned drawingBCL 21/22 14
Figure 4.2: Type key BCL 21/22 15
Table 4.3: Overview of the BCL 21 types 17
Table 4.4: Overview of the BCL 22 types 19
Figure 4.3: Reading field, optics model N (high density) 20
Figure 4.4: Reading field, optics model M (medium density, normal range) 20
Figure 4.5: Reading field, optics model F (low density, long range) 21
Table 5.1: BCL 21 accessories 22
Table 5.2: BCL 22 accessories 23
Figure 5.1: Connector unit MA 2 24
Figure 5.2: Dimensioned drawing connector unit MA 2 25
Figure 5.3: Connector unit MA 4/MA 4D 26
Figure 5.4: Dimensioned drawing connector unit MA 4/MA 4D 27
Figure 5.5: Connector unit MA 4 1xx/MA 4 D 1xx 28
Figure 5.6: Dimensioned drawing MA 4 1xx/MA 4 D 1xx 29
Figure 5.7: Mounting device BT 20 30
Figure 5.8: Mounting device BT 21 30
Figure 6.1: Device name plate BCL 21/22 31
Figure 6.2: Mounting example BCL 21/22 32
Figure 6.3: Applications with perpendicular and front side beam exit 33
Figure 6.4: BCL 21/22 Sub-D pin assignments 34
Table 6.1: Wiring description BCL 21 35
Table 6.2: Wiring description BCL 22 35
Figure 6.5: BCL 21 with connector unit MA 2/MA 4… 36
Figure 6.6: Connector unit MA 2 37
Table 6.3: Terminal assignment MA 2 37
Table 6.4: Terminal assignment voltage supply 38
Table 6.5: Terminal assignment switching inputs 38
Table 6.6: Terminal assignment switching outputs 38
Figure 6.7: Circuitry MA 2 39
Figure 6.8: Connector unit MA 4/MA 4D 39
Table 6.7: Terminal assignment MA 4/MA 4D 40
Table 6.8: Terminal assignment voltage supply 40
Table 6.9: Terminal assignment switching inputs 41
Table 6.10: Terminal assignment switching outputs 41
Figure 6.9: Circuitry MA 4/MA 4D 42
Figure 6.10: Connector unit MA 4 1xx/MA 4 D 1xx 43
Table 6.11: Terminal assignment MA 4 1xx/MA 4 D 1xx 43
Table 6.12: Terminal assignment voltage supply 44
Table 6.13: Terminal assignment switching inputs 44
Table 6.14: Terminal assignment switching outputs 45
Figure 6.11: Circuitry MA 4 1xx/MA 4 D 1xx 45
Table 6.15: Wire Lengths and Shielding 46

Figure 7.1: Configuration elements in the MA 2 47
Figure 7.2: Connecting the MA 2 service interface to a PC or terminal 50
Figure 9.1: Installation window 52
Figure 9.2: Installation directory 53
Figure 10.1: Standard setting of the code menu 54
Figure 10.2: Standard setting of the properties of the code menu 55
Figure 10.3: Output menu 56
Figure 10.4: Control menu default settings 57
Figure 10.5: Standard setting of the communication menu 58
Figure 10.6: Standard setting of the property menu 59
Figure 10.7: Reference code menu 60
Figure 10.8: Standard setting of the switching input menu 61
Figure 10.9: Standard setting of the switching output menu 62
Table 13.1: ASCII Table 79
Figure 13.1: Bar code sample labels (module 0.3) 80
Figure 13.2: Bar code sample labels (module 0.5) 81
Figure 13.3: Declaration of Conformity BCL 21/22 82

1 General Information

1.1 Explanation of Symbols

The symbols used in this operating manual are explained below.

Attention!

Pay attention to passages marked with this symbol. Failure to heed this information can lead to injuries to personnel or damage to the equipment.

Attention Laser!

This symbol warns of possible danger through hazardous laser radiation.

Notice!

This symbol indicates text passages containing important information.

1.2 Declaration of Conformity

The bar code reader BCL 21/22 and the connector units MA 2/MA 4… have been developed and produced in accordance with the applicable European standards and directives.

The barcode reader BCL 21/22 also fulfils the UL requirements (Underwriters Laboratory Inc.) for the USA and Canada.

Notice!

You can find the Declaration of Conformity of the devices in the appendix on page 82.

The manufacturer of the product, Leuze electronic GmbH & Co KG in D-73277 Owen/Teck, possesses a certified quality assurance system in accordance with ISO 9001.

2 Safety Notices

2.1 Safety Standards

The bar code readers BCL 21/22 and the connector units MA 2/MA 4… have been developed, produced and tested subject to the applicable safety standards. They correspond to the state of the art.

2.2 Intended Use

Attention!

The protection of personnel and the device cannot be guaranteed if the device is operated in a manner not corresponding to its intended use.

Bar code readers of the type BCL 21/22 are conceived as stationary, high-speed scanners with integrated decoders for all current bar codes used for automatic object recognition.

The connector and interface units MA 2/MA 4… are intended for the easy connection of bar code readers of type BCL 21/22.

In particular, unauthorised uses include:

- rooms with explosive atmospheres
- operation for medical purposes

Areas of application

The bar code readers BCL 21/22 with optional connector unit MA 2/MA 4… are conceived particularly for the following fields of application:

- labelling and packaging machines
- automatic analysers
- space-critical barcode reading tasks
- storage and conveying technologies, in particular for object identification on fast-moving conveyor belts
- pharmaceutical industry

2.3 Working Safely

Attention!

Access to or changes on the device, except where expressly described in this operating manual, is not authorised.

Safety regulations

Observe the locally applicable legal regulations and the rules of the employer's liability insurance association.

Qualified personnel

Mounting, commissioning and maintenance of the device must only be carried out by qualified personnel.
Electrical work must be carried out by a certified electrician.

Attention Laser Radiation!

WARNING: The barcode reader BCL 21/22 operates with a red light laser of class 2 acc. to EN 60825-1 (2003/10). If you look into the beam path over a longer time period, the retina of your eye may be damaged!

Never look directly into the beam path!

Do not point the laser beam of the BCL 21/22 at persons!

When mounting and aligning the BCL 21/22, take care to avoid reflections of the laser beam off reflective surfaces!

Heed the laser safety regulations according to DIN EN 60825-1 in their most current version! The output power of the laser beam at the reading window is at most 1.3mW acc. to (DIN) EN 60825-1 (2003/10).

The BCL 21/22 uses a laser diode with low power in the visible red light range with an emitted wavelength of 650 … 690nm.

CAUTION - the use of operating and adjusting devices other than those specified here or carrying out of differing procedures may lead to dangerous exposure to radiation!

The housing of the bar code reader BCL 21/22 is labelled on the side, below the scanner window and on the rear with the following logotypes:

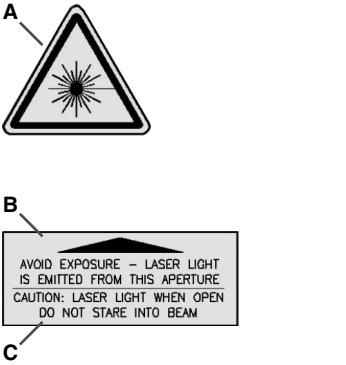

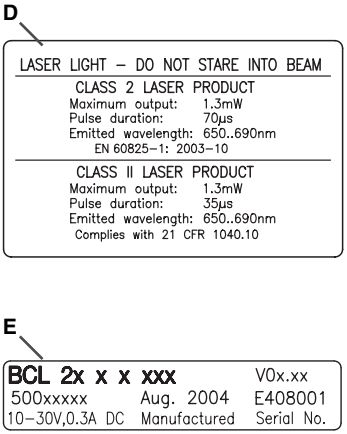

A Hazard warning & logotype
B Aperture label
C Non-interlocked protective housing label
D Warning label and certification label
E Identification label

Figure 2.1: Attachment of the sticky labels with warning notices at the BCL 21/22

3 Description

BCL 21/22 device construction

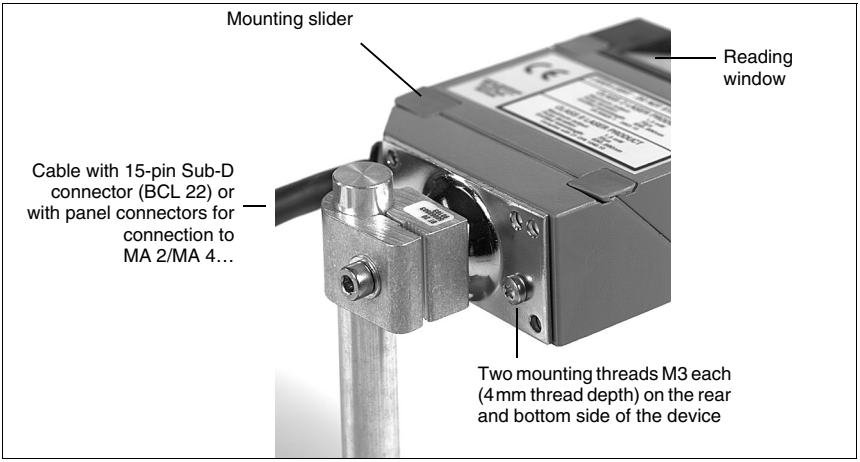

Figure 3.1: BCL 21/22 device construction

3.1 The Bar Code Readers BCL 21/22

The bar code readers BCL 21/22 are high-speed scanners with integrated decoder for all bar codes currently in use, e.g. 2/5 Interleaved, EAN etc.

The many possible configurations allow the adaptation of the device to a multitude of reading tasks. Due to the small dimensions, the BCL 21/22 may also be used in highly constrained spaces. The low weight permits the installation into machines that were not designed for heavy components. The various beam exits (perpendicular/front side) extend the area of application of the BCL 21/22 and help it to adapt.

The connector units MA 2/MA 4… offer simple electrical installation in conjunction with the BCL 21. Information on technical data and characteristics can be found in chapter 4.

BCL 22 "stand alone"

The bar code reader BCL 22 is operated as a "stand-alone" device. The BCL features a cable for the electrical connection of the supply voltage, the interface, and the switching inputs.

BCL 21 with MA 2

If several BCLs are to be networked, the use of a connector unit MA 2/MA 4… is recommended for each BCL 21. Electrical connection, commissioning, and service can be comfortably carried out in a short period of time. BCL 21 and MA 2/MA 4… are arranged separately. The two devices are connected by a cable.

3.1.1 Networking

Up to 30 scanners can be networked via the connector unit MA 2 and a bus master MA 30/31. For this, every BCL 21 is assigned its own hardware address in the corresponding MA 2. The devices are networked by connecting the individual RS 485 interfaces in parallel.

multiNet plus

In the Leuze multiNet plus, the individual network devices sequentially transfer their data to the network master MA 30/31 when requested. In addition, every bus node declared a slave receives a device address which is adjusted in the corresponding MA 2/MA 4… via a coding switch. The device address remains in the MA 2/MA 4… when the scanner is replaced.

The master then transmits the data of all network devices via its host interface to a primary PLC control system or a computer, i.e. it "collects" the scanner data in the network and transmits them to an interface on the host computer. This reduces interface costs (CPs) and time spent programming the software.

Networking via multiNet plus

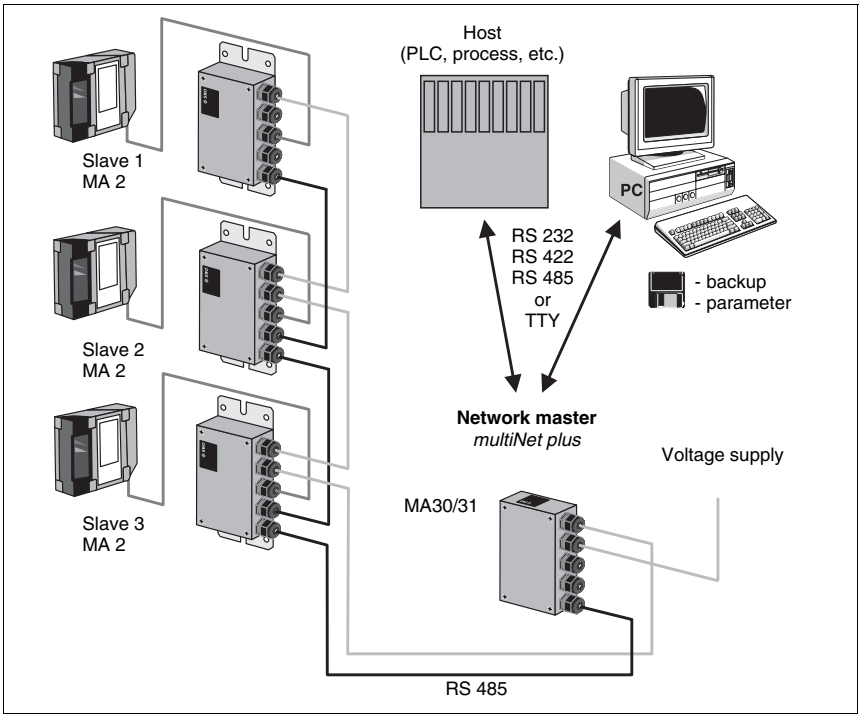

Figure 3.2: Networking possibilities using the multiNet plus (BCL 21)

Two-wire RS 485

The Leuze multiNet plus is optimised for fast transmission of scanner data to a primary host computer. The multiNet plus consists physically of a two-wire RS 485 interface through which the multiNet plus software protocol is controlled. This makes wiring the network easy and inexpensive as slaves are connected to one another in parallel.

Interface modules

Shielded, twisted pair conductors should be used for the multiNet. This allows a total network length of up to 1200 m. Connection of the network to the primary computer is made via the host interface of the MA 30/31 which can be equipped with 4 different physical interface modules. The available options are modules for RS 422, RS 232, TTY or RS 485.

ПРОМЭЛЕКТРОНИКА / sales@prom-elec.com

4 Specifications

4.1 General Specifications BCL 21/22

Optical Data	
Light source	laser diode, red 650 nm, protection class 2, CDRH Class II
Scanning rate	1000 scans/s, vers. M; 800 scans/s, vers. N, F
Resolution	BCL 2x SN: 0.15 … 0.2 mm module width BCL 2x SM: 0.2 … 0.8 mm module width BCL 2x SF: 0.5 … 1.0 mm module width
Beam deflection	by means of rotating polygon mirror wheel
Read distance	50 … 450 mm (depending on type of optics: N, F, M)
Reading field opening	70 mm at 50 mm distance
Grid (R1)	10 lines
Grid field	the distance from the first to the last laser beam is specified in relation to the distance to the scanner: 16 mm at a scanner distance of 100 mm, 29 mm at a scanner distance of 200 mm, 42 mm at a scanner distance of 300 mm, 55 mm at a scanner distance of 400 mm,
Optical window	glass with scratch-resistant Indium coating
Laser safety class	2 acc. to DIN EN 60825-1 (2003/10) II acc. to CDRH (U.S. 21 CFR 1040.10 and 1040.11)
Code types	2/5 Interleaved; Code 39; Code 93, Code 128; EAN 128; EAN/UPC; EAN Adendum; Codabar; Pharma Code
Electrical data	
Interface type	RS 232 (BCL 22), RS 485 (BCL 21), additional service interface (RS 232)
Baud rate	adjustable 100 … 57600 Baud
Switching input	one/two switching input(s) and output(s) (BCL 21/BCL 22)
Data format	data bits: 7, 8, 9; parity: None, Even, Odd; stop bits: 1, 2
Operating voltage	10 … 30 VDC
Power consumption	3.2 W
Mechanical data	
Protection class	IP 65
Weight	180 g/260 g with cable
Dimensions (W x H x D)	82 mm x 68 mm x 28 mm
Housing	ABS
Environmental conditions	
Ambient temperature	0 °C … +40 °C
Air humidity	max. 90% rel. humidity, non-condensing
Storage temperature	-20 °C … +60 °C
Vibration	IEC 60068-2-6, test FC
Shock	IEC 60068-2-27, test Ea
Repeated shock	IEC 60068-2-29, test Eb
Electromagnetic compatibility	EN 55022, EN 61326-1, EN 61000-4-2, -3, -4 and -6

Table 4.1: General Specifications

Notice!

You can find the Declaration of Conformity of the devices in the appendix on page 82.

4.2 LED indicators

LED name	PWR/Ready	ERR/Error	DEC/Decode
LED colour	green	red	yellow
State			
No voltage	off	off	off
Initialisation (after reset)	flashing (cycle 1)	off	off
System ready	on	off	off
Reading gate active	on	off	on
Hardware error • motor defective • laser defective • system defective, etc.	off	on	-
autoConfig/teach-in	flashing (cycle 1)	flashing (cycle 2)	-
Service interface active	on	flashing (cycle 2)	-

Table 4.2: LED indicators

Notice!

The flashing frequency is 5 Hz; cycle 2 is inverse to cycle 1.

4.3 Dimensioned and Connection Drawings

BCL 21/22

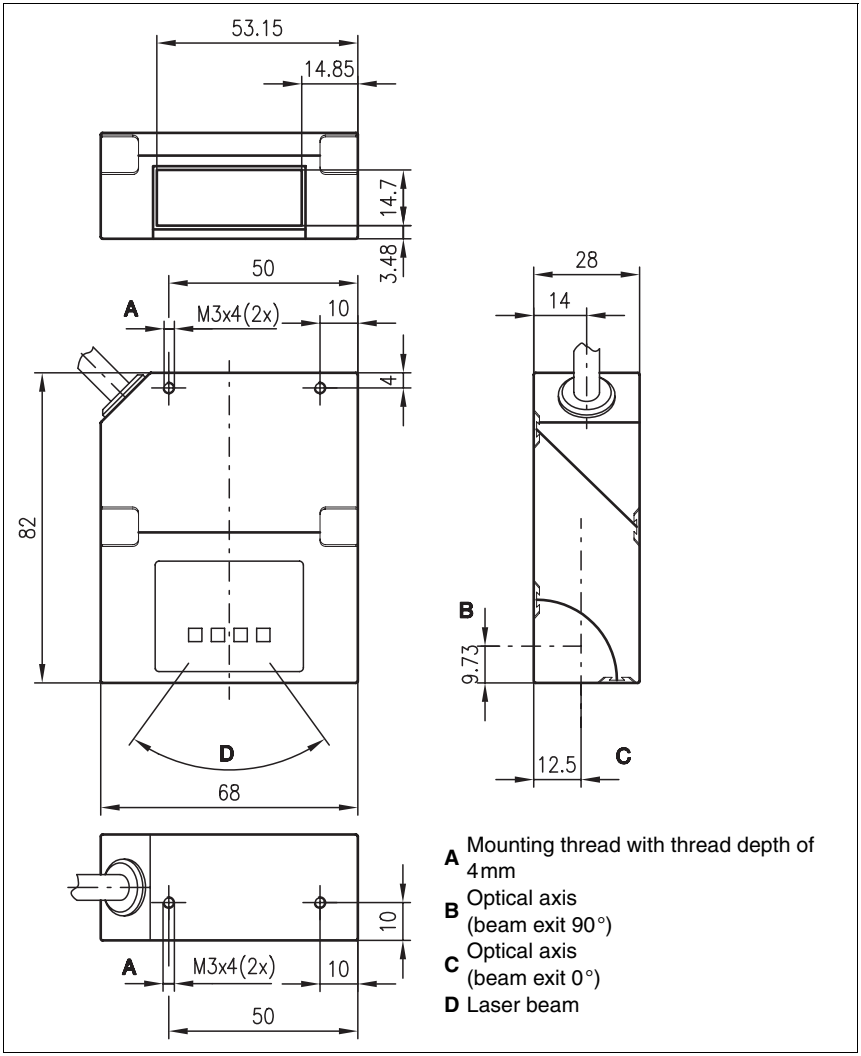

Figure 4.1: Dimensioned drawingBCL 21/22

4.4 Optical Data

Notice!

Please note that the size of the barcode module influences the maximum reading distance and the width of the reading field. Therefore, when selecting a mounting location and/or the barcode label, take into account the different reading characteristics of the scanner with various barcode modules.

For different reading tasks, the BCL 21/22 is available in various versions. Please refer to the following table or the respective scanning curves for ratings.

4.4.1 Type overview

Type key

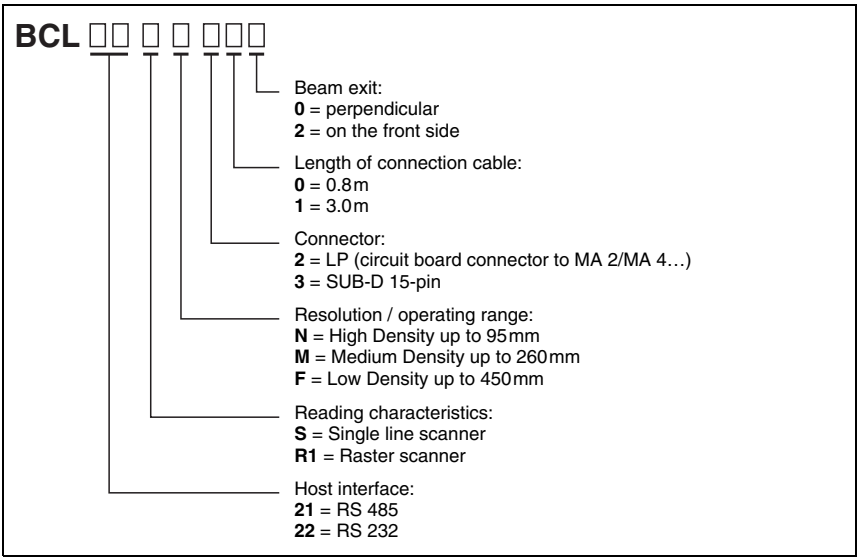

Figure 4.2: Type key BCL 21/22

Type overview BCL 21 with RS 485 interface and integrated decoder

Type	Part No.	Range	Scan rate (scans/s)	Reading characteristics
BCL 21 SN 200	50030986	95mm	800	Single line scanner
BCL 21 SN 202	50030987	95mm	800	Single line scanner
BCL 21 SN 300	50031070	95mm	800	Single line scanner
BCL 21 SN 302	50031072	95mm	800	Single line scanner
BCL 21 SN 210	50032028	95mm	800	Single line scanner
BCL 21 SN 212	50032030	95mm	800	Single line scanner
BCL 21 SN 310	50032032	95mm	800	Single line scanner
BCL 21 SN 312	50032034	95mm	800	Single line scanner
BCL 21 R1 N 200	50061281	95mm	800	Raster scanner
BCL 21 R1 N 202	50061283	95mm	800	Raster scanner
BCL 21 R1 N 300	50061285	95mm	800	Raster scanner
BCL 21 R1 N 302	50061287	95mm	800	Raster scanner
BCL 21 R1 N 210	50032036	95mm	800	Raster scanner
BCL 21 R1 N 212	50032038	95mm	800	Raster scanner
BCL 21 R1 N 310	50032040	95mm	800	Raster scanner
BCL 21 R1 N 312	50032042	95mm	800	Raster scanner
BCL 21 SM 200	50030988	260mm	1000	Single line scanner
BCL 21 SM 202	50030989	260mm	1000	Single line scanner
BCL 21 SM 300	50031076	260mm	1000	Single line scanner
BCL 21 SM 302	50031078	260mm	1000	Single line scanner
BCL 21 SM 210	50032044	260mm	1000	Single line scanner
BCL 21 SM 212	50031720	260mm	1000	Single line scanner
BCL 21 SM 310	50032047	260mm	1000	Single line scanner
BCL 21 SM 312	50032049	260mm	1000	Single line scanner
BCL 21 R1 M 200	50061289	260mm	1000	Raster scanner
BCL 21 R1 M 202	50061291	260mm	1000	Raster scanner
BCL 21 R1 M 300	50061293	260mm	1000	Raster scanner
BCL 21 R1 M 302	50061295	260mm	1000	Raster scanner
BCL 21 R1 M 210	50032051	260mm	1000	Raster scanner
BCL 21 R1 M 212	50032053	260mm	1000	Raster scanner
BCL 21 R1 M 310	50032055	260mm	1000	Raster scanner
BCL 21 R1 M 312	50032057	260mm	1000	Raster scanner
BCL 21 SF 200	50031080	450mm	800	Single line scanner
BCL 21 SF 202	50031082	450mm	800	Single line scanner
BCL 21 SF 300	50031084	450mm	800	Single line scanner
BCL 21 SF 302	50031086	450mm	800	Single line scanner
BCL 21 SF 210	50032059	450mm	800	Single line scanner
BCL 21 SF 212	50032061	450mm	800	Single line scanner
BCL 21 SF 310	50032063	450mm	800	Single line scanner
BCL 21 SF 312	50032065	450mm	800	Single line scanner

Type	Part No.	Range	Scan rate (scans/s)	Reading characteristics
BCL 21 R1 F 200	50061297	450 mm	800	Raster scanner
BCL 21 R1 F 202	50061299	450 mm	800	Raster scanner
BCL 21 R1 F 300	50061301	450 mm	800	Raster scanner
BCL 21 R1 F 302	50061303	450 mm	800	Raster scanner
BCL 21 R1 F 210	50032067	450 mm	800	Raster scanner
BCL 21 R1 F 212	50032069	450 mm	800	Raster scanner
BCL 21 R1 F 310	50032071	450 mm	800	Raster scanner
BCL 21 R1 F 312	50032073	450 mm	800	Raster scanner
Modular connector units and accessories see chapter 5.1				

Table 4.3: Overview of the BCL 21 types

Type overview BCL 22 with RS 232 interface and integrated decoder

Type	Part No.	Range	Scan rate (scans/s)	Reading characteristics
BCL 22 SN 200	50031088	95mm	800	Single line scanner
BCL 22 SN 202	50031090	95mm	800	Single line scanner
BCL 22 SN 300	50030990	95mm	800	Single line scanner
BCL 22 SN 302	50030991	95mm	800	Single line scanner
BCL 22 SN 210	50032075	95mm	800	Single line scanner
BCL 22 SN 212	50061451	95mm	800	Single line scanner
BCL 22 SN 310	50032078	95mm	800	Single line scanner
BCL 22 SN 312	50032080	95mm	800	Single line scanner
BCL 22 R1 N 200	50061305	95mm	800	Raster scanner
BCL 22 R1 N 202	50061307	95mm	800	Raster scanner
BCL 22 R1 N 300	50061309	95mm	800	Raster scanner
BCL 22 R1 N 302	50061311	95mm	800	Raster scanner
BCL 22 R1 N 210	50032082	95mm	800	Raster scanner
BCL 22 R1 N 212	50032084	95mm	800	Raster scanner
BCL 22 R1 N 310	50032087	95mm	800	Raster scanner
BCL 22 R1 N 312	50032089	95mm	800	Raster scanner
BCL 22 SM 200	50031094	260mm	1000	Single line scanner
BCL 22 SM 202	50031096	260mm	1000	Single line scanner
BCL 22 SM 300	50030992	260mm	1000	Single line scanner
BCL 22 SM 302	50030993	260mm	1000	Single line scanner
BCL 22 SM 210	50032091	260mm	1000	Single line scanner
BCL 22 SM 212	50032093	260mm	1000	Single line scanner
BCL 22 SM 310	50032095	260mm	1000	Single line scanner
BCL 22 SM 312	50032097	260mm	1000	Single line scanner
BCL 22 R1 M 200	50061313	260mm	1000	Raster scanner
BCL 22 R1 M 202	50061315	260mm	1000	Raster scanner
BCL 22 R1 M 300	50061317	260mm	1000	Raster scanner
BCL 22 R1 M 302	50061319	260mm	1000	Raster scanner
BCL 22 R1 M 210	50032099	260mm	1000	Raster scanner
BCL 22 R1 M 212	50032101	260mm	1000	Raster scanner
BCL 22 R1 M 310	50031704	260mm	1000	Raster scanner
BCL 22 R1 M 312	50032104	260mm	1000	Raster scanner
BCL 22 SF 200	50031100	450mm	800	Single line scanner
BCL 22 SF 202	50031102	450mm	800	Single line scanner
BCL 22 SF 300	50031104	450mm	800	Single line scanner
BCL 22 SF 302	50031106	450mm	800	Single line scanner
BCL 22 SF 210	50032106	450mm	800	Single line scanner
BCL 22 SF 212	50032108	450mm	800	Single line scanner
BCL 22 SF 310	50032110	450mm	800	Single line scanner
BCL 22 SF 312	50032112	450mm	800	Single line scanner

Type	Part No.	Range	Scan rate (scans/s)	Reading characteristics
BCL 22 R1 F 200	50061321	450 mm	800	Raster scanner
BCL 22 R1 F 202	50061323	450 mm	800	Raster scanner
BCL 22 R1 F 300	50061325	450 mm	800	Raster scanner
BCL 22 R1 F 302	50061327	450 mm	800	Raster scanner
BCL 22 R1 F 210	50032114	450 mm	800	Raster scanner
BCL 22 R1 F 212	50032116	450 mm	800	Raster scanner
BCL 22 R1 F 310	50032118	450 mm	800	Raster scanner
BCL 22 R1 F 312	50032120	450 mm	800	Raster scanner
Modular connector units and accessories see chapter 5.1				

Table 4.4: Overview of the BCL 22 types

4.4.2 Optics variants and reading fields

The BCL 21/22 is available with three different optics. The optics differ in range and resolution (see see chapter 4.1 "General Specifications BCL 21/22").

- N optics: for small modules.
- M optics: for small to medium modules
- F optics: for medium to large modules

The following graphics display the ranges of the various BCL models.

Notice!

Please notice that the real scanning curves are also influenced by factors such as labelling material, printing quality, scanning angle, printing contrast etc., and may thus deviate from the scanning curves specified here.

Scanning curves BCL 21/22 with N optics

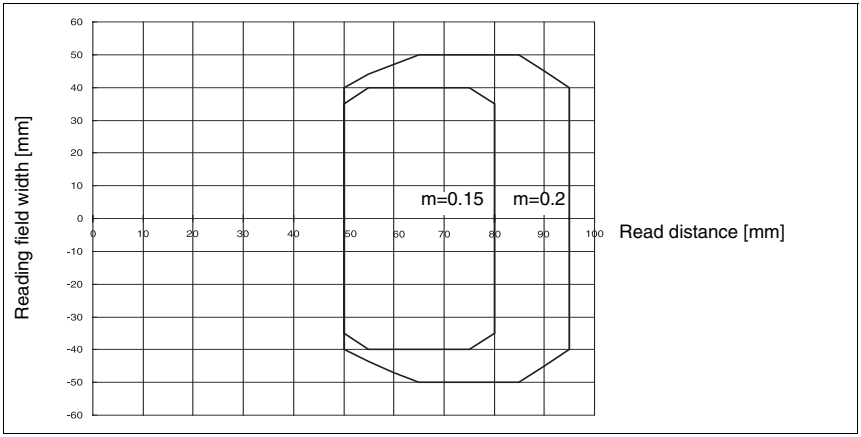

Figure 4.3: Reading field, optics model N (high density)

Scanning curves BCL 21/22 with M optics

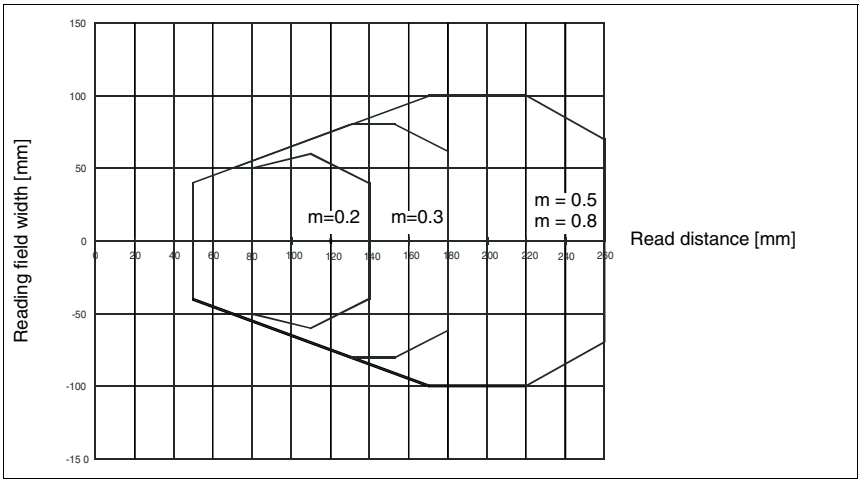

Figure 4.4: Reading field, optics model M (medium density, normal range)

Scanning curves BCL 21/22 with F optics

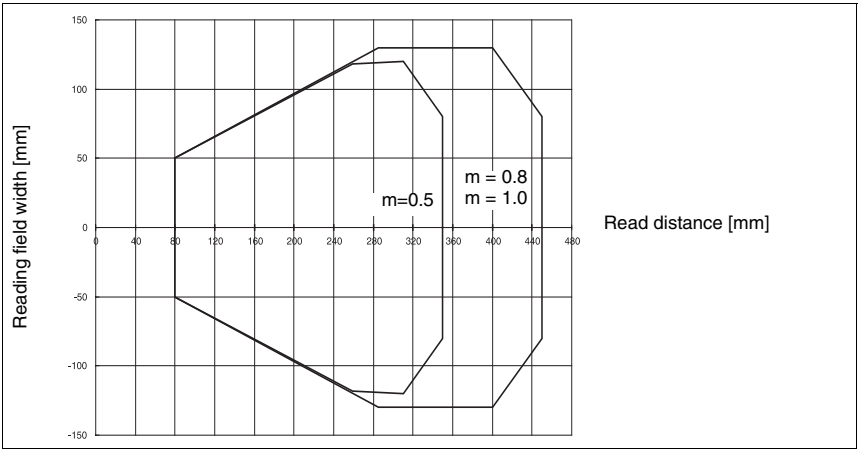

Figure 4.5: Reading field, optics model F (low density, long range)

5 Accessories / Order Designation

5.1 Accessories

Notice!

Products from Leuze electronic GmbH & Co KG can be ordered from any of the sales and service offices listed on the back page of this operating manual.

BCL 21 accessories

Accessories	Part No.	Interface	Voltage	Function
BCL-Config	50031298	–	–	Programming software for the parameterisation, (free download under www.leuze.de)
BT 20	50060503	–	–	Mounting device for rod and sheet metal clamp installation for BCL 21/22
BT 21	50037473	–	–	Stainless steel mounting device for BCL 21/22
MA 31 100	50030835	RS 485 RS 485	18 … - 36VDC	multiNet Master, flat housing cover
MA 31 110	50030836	RS 232 RS 485	18 … - 36VDC	multiNet Master, flat housing cover
MA 31 120	50030837	TTY RS 485	18 … - 36VDC	multiNet Master, flat housing cover
MA 31 130	50030838	RS 422 RS 485	18 … - 36VDC	multiNet Master, flat housing cover
MA 2	50031256	RS 232 RS 485	10 … 30VD C	Connector unit, stand alone or network slave for BCL 21/22
MA 4	50031537	RS 232 RS 485	10 … 30VD C	Connector unit, stand alone or network slave for BCL 21/22
MA 4D	50031536	RS 232 RS 485	10 … 30VD C	Connector unit, stand alone or multiNet slave with display for BCL 21/22

Table 5.1: BCL 21 accessories

BCL 22 accessories

Accessories	Part No.	Interface	Voltage	Function
BCL-Config	50031298	–	–	Programming software for the parameterisation, (free download under www.leuze.de)
BT 20	50060503	–	–	Mounting device for rod and sheet metal clamp installation for BCL 21/22
BT 21	50037473	–	–	Stainless steel mounting device for BCL 21/22
MA 2	50031256	RS 485 RS 232	10 … 30VDC	Connector unit, stand alone or network slave for BCL 21/22
MA 22 DC	50031496	RS 232	10 … 30VDC	Connector unit, 15-pin Sub-D connector for BCL 22
MA 4	50031537	RS 232 RS 485	10 … 30VDC	Connector unit, stand alone or network slave for BCL 21/22
MA 4D	50031536	RS 232 RS 485	10 … 30VDC	Connector unit, stand alone or multiNet slave with display for BCL 21/22
MA 4 110	50039659	RS 232	10 … 30VDC	Connector unit, stand alone for BCL 22 electrically insulated
MA 4 120	50039660	TTY	10 … 30VDC	Connector unit, stand alone for BCL 22
MA 4 130	50039661	RS 422	10 … 30VDC	Connector unit, stand alone for BCL 22
MA 4 D 110	50039662	RS 232	10 … 30VDC	Connector unit, stand alone with display for BCL 22, electrically insulated
MA 4 D 120	50039663	TTY	10 … 30VDC	Connector unit, stand alone with display for BCL 22
MA 4 D 130	50039664	RS 422	10 … 30VDC	Connector unit, stand alone with display for BCL 22
MA 42 DP-K	50035298	RS 232 Profi-bus DP	18 … 30VDC	Connector unit for connection to BCL 22 x y 2..
MA 42 IS	50032853	RS 232 Inter-bus-S	18 … 30VDC	Connector unit for connection to BCL 22 x y z
MA 42 IS PDP	50032854	RS 232 Inter-bus-S	18 … 30VDC	Connector unit for connection to BCL 22 x y z

Table 5.2: BCL 22 accessories

5.1.1 Connector units MA 2/MA 4…

Notice!

The connector units are described here in brief only. For further information regarding the connector units please refer to the relevant data sheets

Connector unit MA 2

The connector unit MA 2 is used to simplify the electrical installation of the BCL 21/22. It has the following advantages:

- Terminals for switching inputs and outputs, including supply voltage
- Terminals for feed-through of the RS 485 connection
- 9-pin sub-D plug for service interface
- Operating mode switch: service operation/standard operation
- Rotary switch for address setting

Figure 5.1: Connector unit MA 2

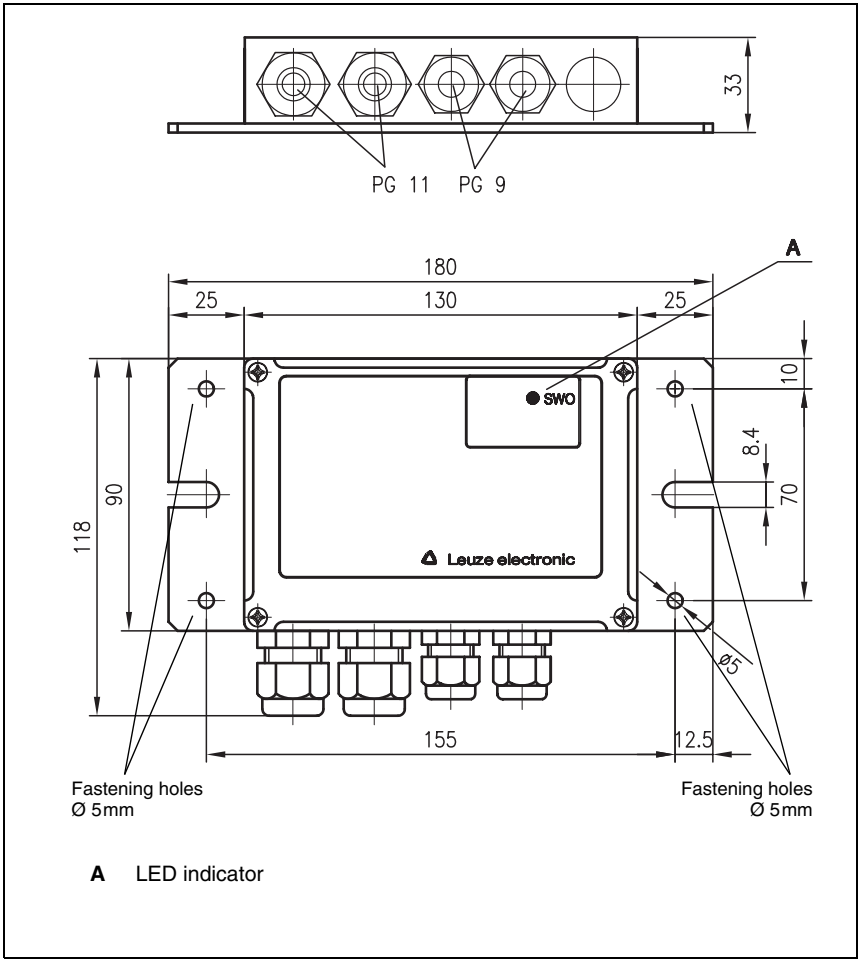

Figure 5.2: Dimensioned drawing connector unit MA 2

Connector unit MA 4/MA 4D

Apart from the advantages of the connector unit MA 2, the connector units MA 4/MA 4D have the following additional characteristics:

- Parameter memory for the BCL:
  the BCL can be exchanged without the need for reconfiguration.
- Display (MA 4D only)

Figure 5.3: Connector unit MA 4/MA 4D

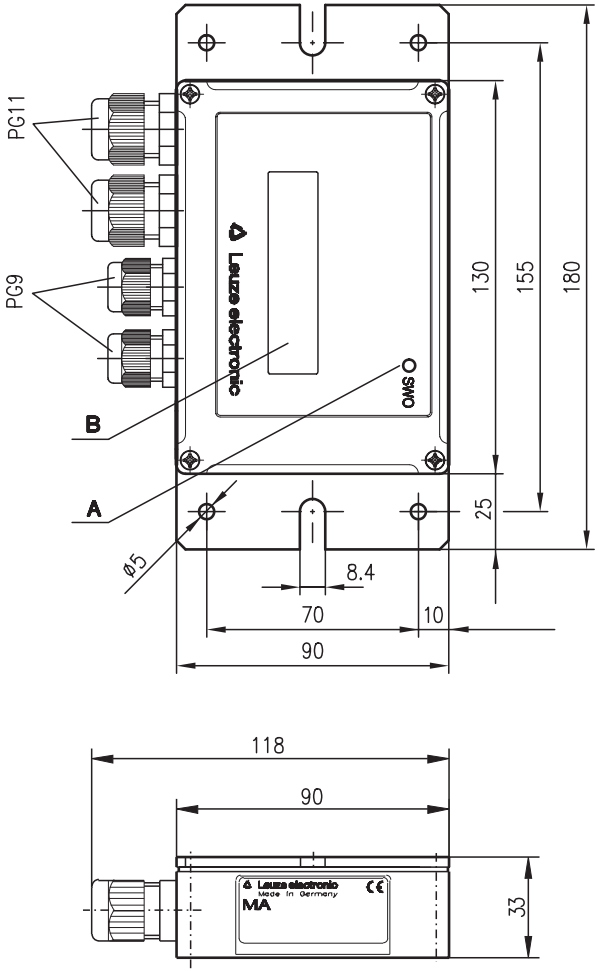

A LED indicator
B LCD indicator

Figure 5.4: Dimensioned drawing connector unit MA 4/MA 4D

Connector unit MA 4 1xx/MA 4 D 1xx

Compared to the MA 4/MA 4 D, additional features of this connector unit are:

- Various pluggable interface modules, such as RS 232, RS 485, TTY, and RS 422.

Figure 5.5: Connector unit MA 4 1xx/MA 4 D 1xx

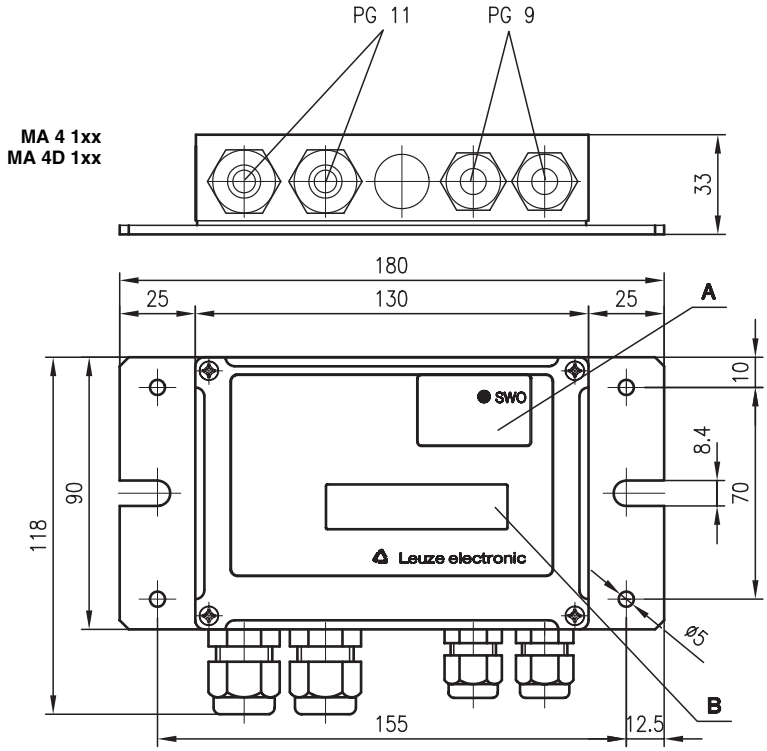

A LED indicator
B optional LCD indicator

Figure 5.6: Dimensioned drawing MA 4 1xx/MA 4 D 1xx

5.1.2 Fastening Accessories

The mounting device BT 20/21 (stainless steel) is available for mounting the BCL 21/22. It permits both rod mounting and installation via sheet metal clamp.

Mounting device BT 20

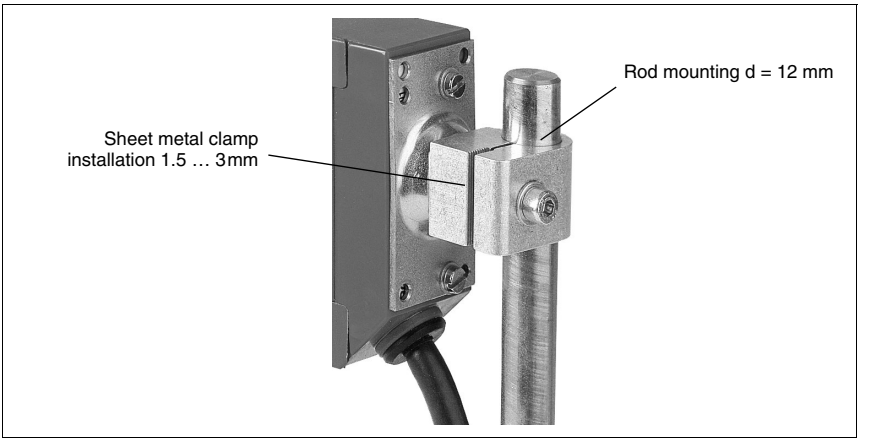

Figure 5.7: Mounting device BT 20

Mounting device BT 21

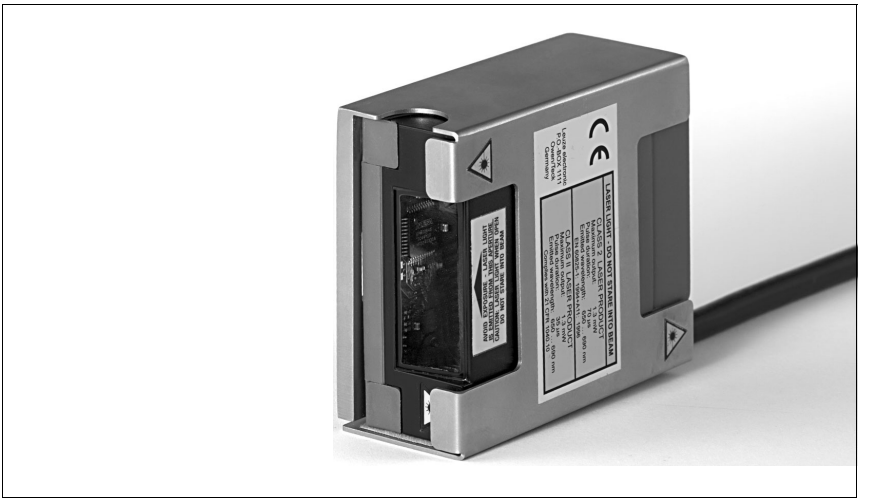

Figure 5.8: Mounting device BT 21

6 Installation

6.1 Storage, Transportation

Attention!

When transporting, package the device so that it is protected against collision and humidity. Optimal protection is achieved when using the original packaging. Heed the required environmental conditions specified in the technical data.

Unpacking

- *Check the packaging for any damage. If damage is found, notify the post office or shipping agent as well as the supplier.*
- *Check the delivery contents using your order and the delivery papers:*
  - delivered quantity
  - device type and model as indicated on the nameplate
  - accessories
  - operating manual

The name plate provides information as to what BCL type your device is. For specific information, please refer to chapter 4.4.1.

Name plates, BCL-models

Figure 6.1: Device name plate BCL 21/22

- *Save the original packaging for later storage or shipping.*

If you have any questions concerning your shipment, please contact your supplier or your local Leuze electronic sales office.

- *Observe the applicable local regulations when disposing of the packaging materials.*

Cleaning

- *Clean the glass window of the BCL 21/22 with a soft cloth before mounting. Remove all packaging remains, e.g. carton fibres or Styrofoam balls.*

Attention!

Do not use aggressive cleaning agents such as thinner or acetone for cleaning the device.

6.2 Mounting

Attention Laser Radiation!

Follow the safety notices in chapter 2.3 on page 7!

Mounting devices are available which have to be ordered separately as accessory at Leuze electronic. For order numbers, see chapter 5.

The mounting devices BT 20/BT 21 are suitable both for rod mounting (d = 12mm) and for mounting using a sheet metal clamp if the sheet metal is 1.5 … 3mm thick. Otherwise, the mounting threads at the back and bottom side of the device are suitable for installation of the BCL 21/22 according to its area of application.

Mounting example BCL 21/22

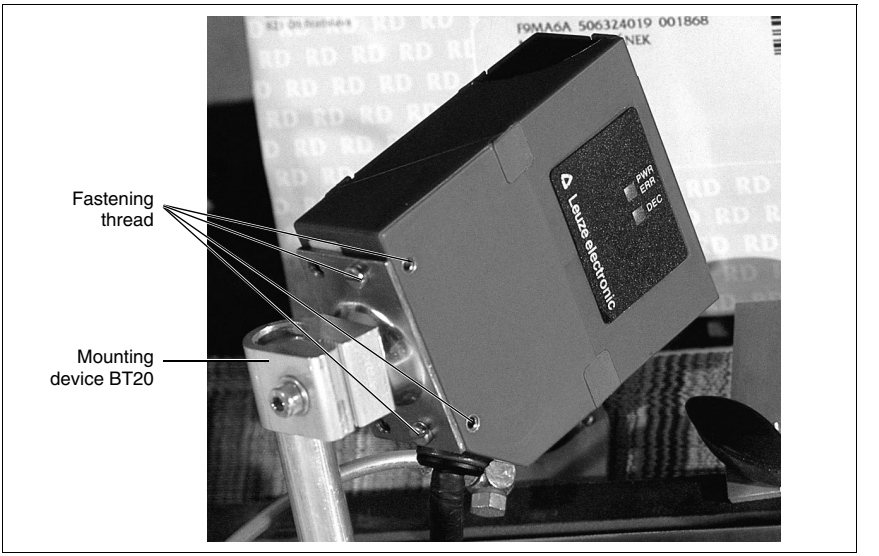

Figure 6.2: Mounting example BCL 21/22

Mounting MA 2/MA 4…

You can mount the connector units MA 2/MA 4… individually through the holes Ø 5mm located on the mounting plate (see figure 5.2 and figure 5.4).

Then connect the BCL 21 with the connector unit MA 2/MA 4… as described in chapter 6.3.2.

6.2.1 Device Arrangement

Selecting a mounting location

In order to select the right mounting location, several factors must be considered:

- size, orientation, and position tolerance of the barcodes on the objects to be scanned
- the reading field of the BCL 21/22 in relation to the bar code module width
- the resulting minimum and maximum reading distance from the respective reading field

For specific information, please refer to chapter 4.4.

Notice!

The best reading results are obtained when

- *the bar code is moved along the reading window at an angle of approx. 9 … 15°.*
- *the reading distance lies in the middle area of the reading field.*
- *you do not use high-gloss labels.*

Application examples

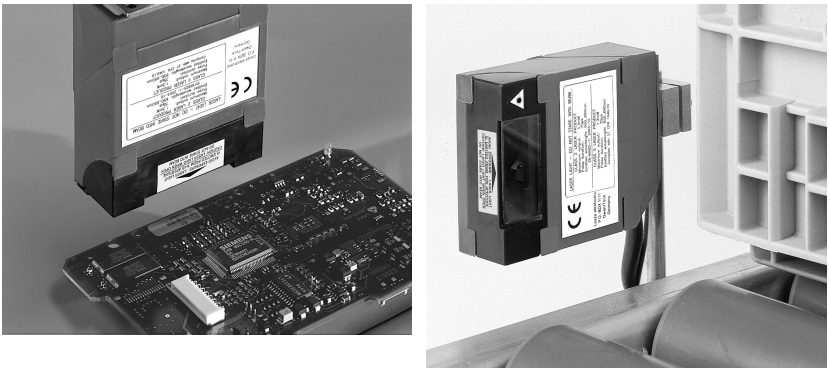

Figure 6.3: Applications with perpendicular and front side beam exit

Mounting location

↳ *When selecting a mounting location, pay attention to*

- maintaining the required environmental conditions (temperature, humidity)
- possible soiling of the reading window due to liquids, abrasion by boxes, or packaging material residues.
- lowest possible chance of damage to the scanner by mechanical collision or jammed parts.

6.3 Connection

Attention!

Do not open the device yourself under any circumstances! There is otherwise a risk of uncontrolled emission of laser radiation from the device. The housing of the BCL 21/22 contains no parts that need to be adjusted or maintained by the user.

Before connecting the device, be sure that the supply voltage agrees with the value printed on the nameplate.

Connection of the device and maintenance work while under voltage must only be carried out by a qualified electrician.

The power supply unit for the generation of the supply voltage for the BCL 21/22 and the MA 2/MA 4… must have a secure electrical insulation through double insulation and safety transformers according to EN 60742/IEC 60742 (functional low voltage).

Be sure that the earthing conductor is connected correctly. Error-free operation is only guaranteed when the device is properly earthed.

If faults cannot be corrected, the device should be removed from operation and protected against possible use.

6.3.1 Connection BCL 21/22 stand alone

BCL 21/22 Sub D-pin assignments

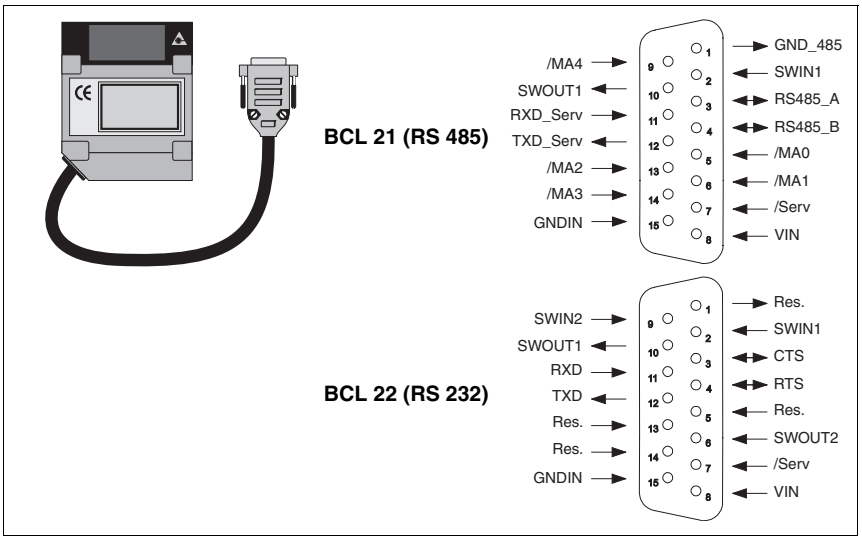

Figure 6.4: BCL 21/22 Sub-D pin assignments

Wiring description BCL 21

Pin 1	GND 485	
Pin 2	SWIN1	Switching input 1, 12 … 30VDC, (see figure 6.7)
Pin 3	RS485_A	Signal line A, host interface RS 485
Pin 4	RS485_B	Signal line B, host interface RS 485
Pin 5	/MA0	Address selection bit0
Pin 6	/MA1	Address selection bit1
Pin 7	/Serv	Bridge to pin 15: service operation via RS 232 interface
Pin 8	VIN	Supply voltage +10 … 30VDC
Pin 9	/MA4	Address selection bit4
Pin 10	SWOUT1	Switching output 1
Pin 11	RXD_Serv	RXD signal, service interface RS 232
Pin 12	TXD_Serv	TXD signal, service interface RS 232
Pin 13	/MA2	Address selection bit2
Pin 14	/MA3	Address selection bit3
Pin 15	GNDIN	Supply voltage 0VDC
Metal flange	PE	Shielding (the shielding of the sub-D-cable is connected with the flange of the connector casing)

Table 6.1: Wiring description BCL 21

Wiring description BCL 22

Pin 1	Res.	Reserved
Pin 2	SWIN1	Switching input 1, 12 … 30VDC, (see figure 6.7)
Pin 3	CTS	CTS signal, host interface RS 232
Pin 4	RTS	RTS signal, host interface RS232
Pin 5	Res.	Reserved
Pin 6	SWOUT2	Switching output 2
Pin 7	/Serv	Bridge with pin 15: service operation
Pin 8	VIN	Supply voltage +10 … 30VDC
Pin 9	SWIN2	Switching input 2, 12 … 30VDC
Pin 10	SWOUT1	Switching output 1
Pin 11	RXD	RXD signal, service interface RS 232
Pin 12	TXD	TXD signal, service interface RS 232
Pin 13	Res.	Reserved
Pin 14	Res.	Reserved
Pin 15	GNDIN	Supply voltage 0VDC
Metal flange	PE	Shielding (the shielding of the sub-D-cable is connected with the flange of the connector casing)

Table 6.2: Wiring description BCL 22

Switching inputs

A read process can be triggered by applying a voltage of 12 … 30VDC to the switched input connections SWIN1 and SWIN2.

6.3.2 Connection BCL 21 with MA 2/MA 4… (RS 485)

Connection of the BCL is considerably easier when using the MA 2/MA 4…. The BCL 21 is alternately equipped with flat connectors which enable connection to the MA 2/MA 4… connector unit. The following figure shows the combination of the two devices.

BCL 21 and MA 2/MA 4…

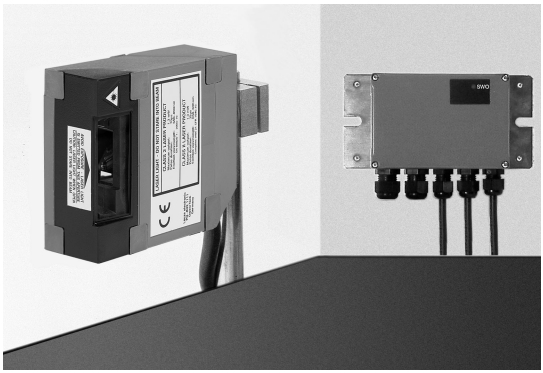

Figure 6.5: BCL 21 with connector unit MA 2/MA 4…

Open MA 2/MA 4… casing

- *Unscrew the four screws on the front side of the MA 2/MA 4… and carefully lift off the lid of the housing. Now you have proper access to all components within the connector unit.*

Notice!

All electrical connections can be carried out on the terminal strip quickly and without screwing down or soldering. Wires with ferruled ends can be inserted directly into the terminal without depressing the clamping lever.

Position of the connectors in the MA 2

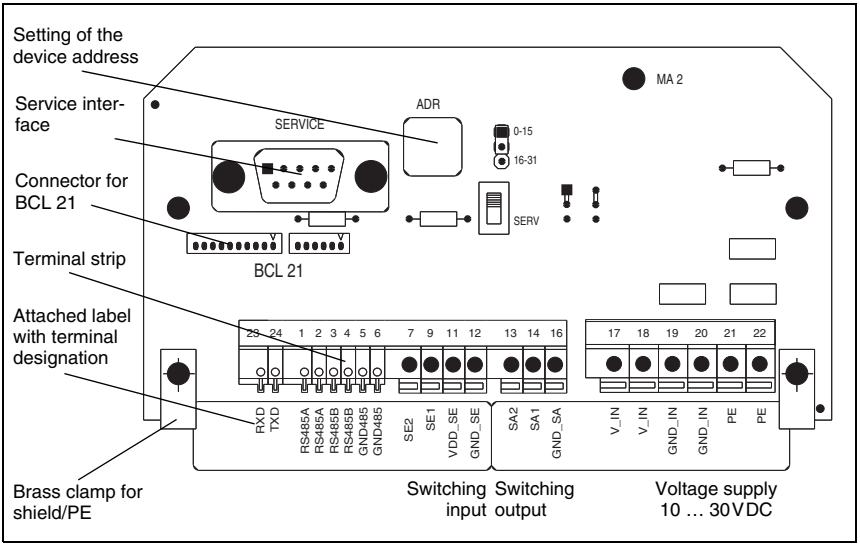

Figure 6.6: Connector unit MA 2

Wiring description

Terminals 1 to 6 as well as 23 and 24 in the MA 2 are assigned as described below. For wiring through, the RS 485 interface at the MA 2 is implemented twice:

Terminal	Signal
1	RS 485 A
2	RS 485 A
3	RS 485 B
4	RS 485 B
5	GND 485
6	GND 485
23	RXD (service)
24	TXD (service)

Table 6.3: Terminal assignment MA 2

Voltage supply

In the connector unit MA 2, the connections for the voltage supply are implemented twice. This permits wiring through or the voltage supply of additional components.

Terminal	Signal	Function
17	V_IN	Operating voltage 10 … 30 VDC
18	V_IN	Operating voltage 10 … 30 VDC
19	GND_IN	Operating voltage 0 VDC
20	GND_IN	Operating voltage 0 VDC
21	PE	Protective earth, grounding
22	PE	Protective earth, grounding

Table 6.4: Terminal assignment voltage supply

Notice!

It is imperative that the protective conductor PE also is wired through to avoid electromagnetic interference.

Switching inputs 1 and 2

The MA 2 connector unit is equipped with two switching inputs SE 1 and SE 2 (SE 2 can only be activated with BCL 22).

- Input voltage: 12 … 30 VDC

Terminal	Signal	Function
7	SE2	Switching input 2, 12 … 30 VDC
9	SE1	Switching input 1, 12 … 30 VDC
11	VDD_SE	Supply voltage, switching input, equal to V_IN device
12	GND_SE	Supply voltage, switching input, equal to GND_IN device

Table 6.5: Terminal assignment switching inputs

Switching outputs 1 and 2

The MA 2 is equipped with 2 switching outputs SA1 and SA2 (SA 2 can only be activated with BCL 22) which can be programmed for various switching functions using the "BCLConfig" software.

- Output voltage corresponds to operating voltage
- Output current: I_{max} = 100 mA

The switching voltage for the output is generated by the operating voltage V_IN:

- VDD_SA = VDD_IN
- GND_SA = GND_IN

Terminal	Signal	Function
13	SA2	Switching output 2
14	SA1	Switching output 1
16	GND_SA	External supply voltage for switching output 0 VDC

Table 6.6: Terminal assignment switching outputs

Circuitry MA 2

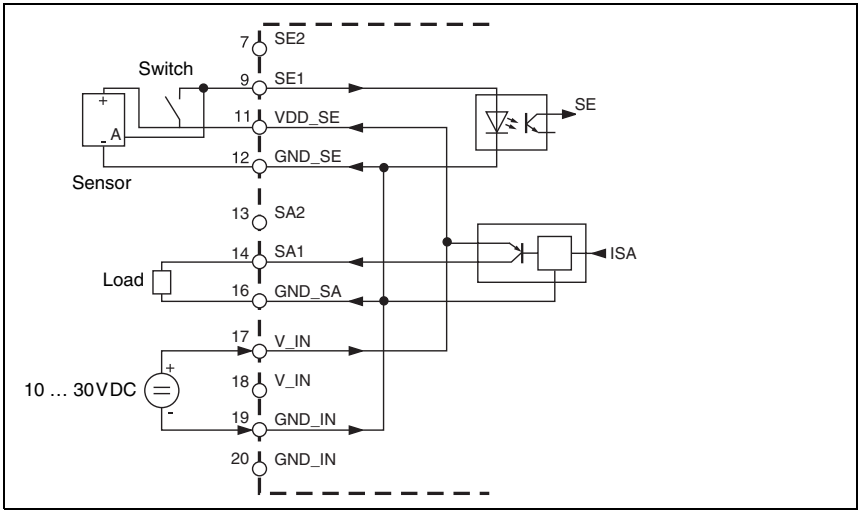

Figure 6.7: Circuitry MA 2

Position of the connectors in the MA 4/MA 4D

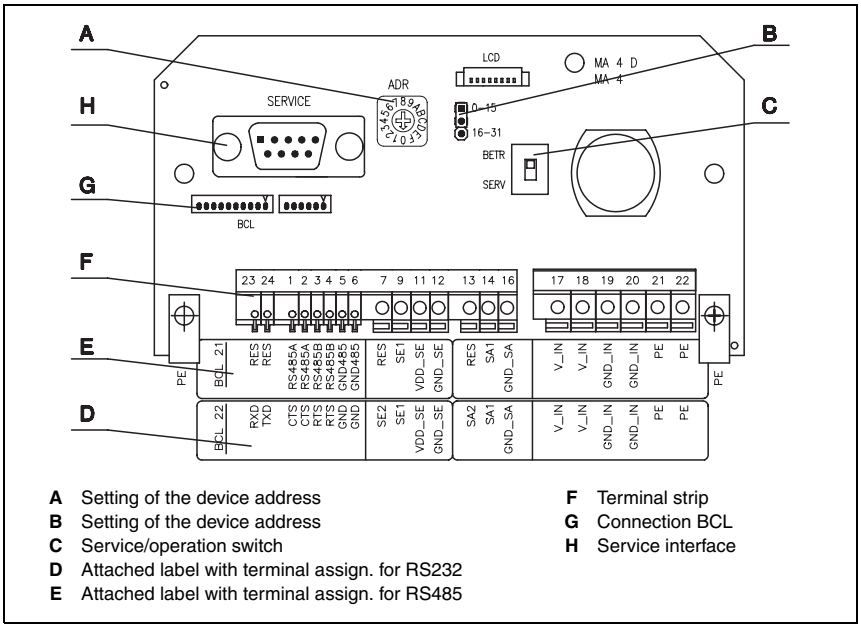

A Setting of the device address
B Setting of the device address
C Service/operation switch
D Attached label with terminal assign. for RS232
E Attached label with terminal assign. for RS485
F Terminal strip
G Connection BCL
H Service interface

Figure 6.8: Connector unit MA 4/MA 4D

Wiring description

Terminals 1 to 6 as well as 23 and 24 in the MA 4/MA 4D are assigned as described below. For wiring through, the RS 485 interface at the MA 4/MA 4D is implemented twice:

Terminal	Signal
1	RS 485 A
2	RS 485 A
3	RS 485 B
4	RS 485 B
5	GND 485
6	GND 485
23	RXD (service)
24	TXD (service)

Table 6.7: Terminal assignment MA 4/MA 4D

Voltage supply

In the connector unit MA 4/MA 4D, the connections for the voltage supply are implemented twice. This permits wiring through or the voltage supply of additional components.

Terminal	Signal	Function
17	V_IN	Operating voltage 10 … 30 VDC
18	V_IN	Operating voltage 10 … 30 VDC
19	GND_IN	Operating voltage 0 VDC
20	GND_IN	Operating voltage 0 VDC
21	PE	Protective earth, grounding
22	PE	Protective earth, grounding

Table 6.8: Terminal assignment voltage supply

Notice!

It is imperative that the protective conductor PE also is wired through to avoid electromagnetic interference.

Switching inputs 1 and 2

The connector unit MA 4/MA 4D has two switching inputs SE 1 and SE 2.

- Input voltage: 12 … 30 VDC

Terminal	Signal	Function
7	SE2	Switching input 2, 12 … 30 VDC (with BCL 22 only)
9	SE1	Switching input 1, 12 … 30 VDC
11	VDD_SE	Supply voltage, switching input, equal to V_IN device
12	GND_SE	GND, switching input, equal to GND_IN device

Table 6.9: Terminal assignment switching inputs

Switching outputs 1 and 2

The MA 4/MA 4D is equipped with two switching outputs (SA1 and SA2) which can be programmed for various switching functions using the "BCLConfig" software.

- Output voltage corresponds to operating voltage
- Output current: I_{max} = 100 mA

The switching voltage for the output is generated by the operating voltage V_IN:

- VDD_SA = VDD_IN
- GND_SA = GND_IN

Terminal	Signal	Function
13	SA2	Switching output 2 (with BCL 22 only)
14	SA1	Switching output 1
16	GND_SA	External supply voltage for switching output 0 VDC

Table 6.10: Terminal assignment switching outputs

Circuitry MA 4/MA 4D

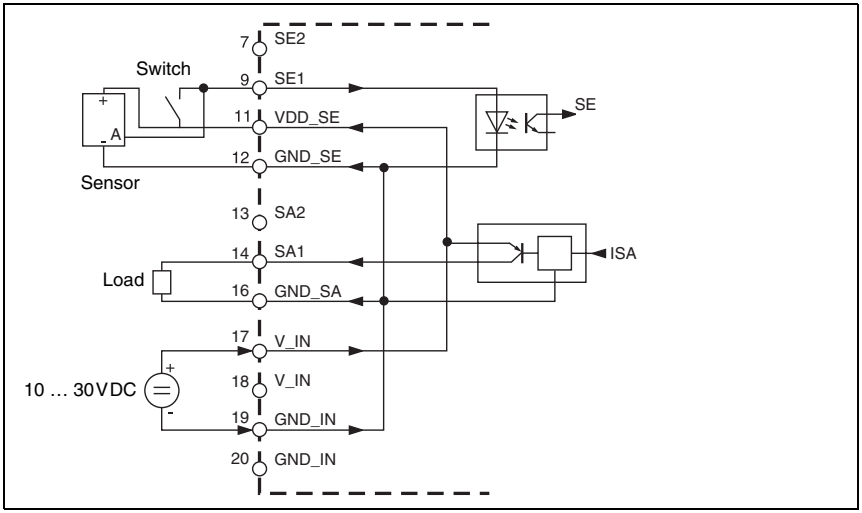

Figure 6.9: Circuitry MA 4/MA 4D

Position of the connectors in the MA 4 1xx/MA 4 D 1xx

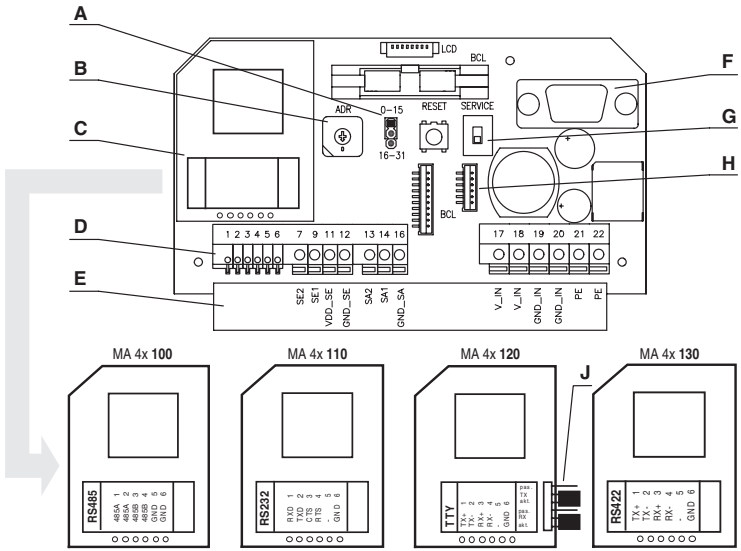

A Setting of the device address 0-15 or 16-31
B Setting of the device address
C Interface module
D Terminal strip
E Attached label with terminal designation
F Service interface
G Service/operation switch
H Connection BCL
J Jumper TTY active/passive (MA 4x 120 … only)

Figure 6.10: Connector unit MA 4 1xx/MA 4 D 1xx

Wiring description

Terminals 1 to 6 in the MA 4 1xx/MA 4 D 1xx are assigned as described below. For wiring through, the RS 485 interface at the MA 4 100/MA 4 D 100 is implemented twice:

Terminal	Signal			
	MA 4(D) 100	MA 4(D) 110	MA 4(D) 120	MA 4(D) 130
1	RS 485 A	RXD	TX+	TX+
2	RS 485 A	TXD	TX-	TX-
3	RS 485 B	CTS	RX+	RX+
4	RS 485 B	RTS	RX-	RX-
5	GND 485	–	–	–
6	GND 485	GND	GND	GND

Table 6.11: Terminal assignment MA 4 1xx/MA 4 D 1xx

Notice!

The operating mode active/passive is selected via the two jumpers on the TTY interface module (MA 4 120/MA 4 D 120).

Voltage supply

In the connector unit MA 4 1xx/MA 4 D 1xx, the connections for the voltage supply are implemented twice. This permits wiring through or the voltage supply of additional components.

Terminal	Signal	Function
17	V_IN	Operating voltage 10 … 30 VDC
18	V_IN	Operating voltage 10 … 30 VDC
19	GND_IN	Operating voltage 0 VDC
20	GND_IN	Operating voltage 0 VDC
21	PE	Protective earth, grounding
22	PE	Protective earth, grounding

Table 6.12: Terminal assignment voltage supply

Notice!

It is imperative that the protective conductor PE also is wired through to avoid electromagnetic interference.

Switching inputs 1 and 2

The connector unit MA 4 1xx/MA 4 D 1xx has two switching inputs SE 1 and SE 2.

- Input voltage: 12 … 30 VDC

Terminal	Signal	Function
7	SE2	Switching input 2, 12 … 30 VDC
9	SE1	Switching input 1, 12 … 30 VDC
11	VDD_SE	Supply voltage, switching input, equal to V_IN device
12	GND_SE	GND, switching input, equal to GND_IN device

Table 6.13: Terminal assignment switching inputs

Switching outputs 1 and 2

The MA 4 1xx/MA 4 D 1xx is equipped with two switching outputs (SA1 and SA2) which can be programmed for various switching functions using the "BCLConfig" software.

- Output voltage corresponds to operating voltage
- Output current: I_{max} = 100 mA

The switching voltage for the output is generated by the operating voltage V+:

- VDD_SA = V_IN
- GND_SA = GND_IN

Terminal	Signal	Function
13	SA2	Switching output 2
14	SA1	Switching output 1
16	GND_SA	External supply voltage for switching output 0 VDC

Table 6.14: Terminal assignment switching outputs

Circuitry MA 4 1xx/MA 4 D 1xx

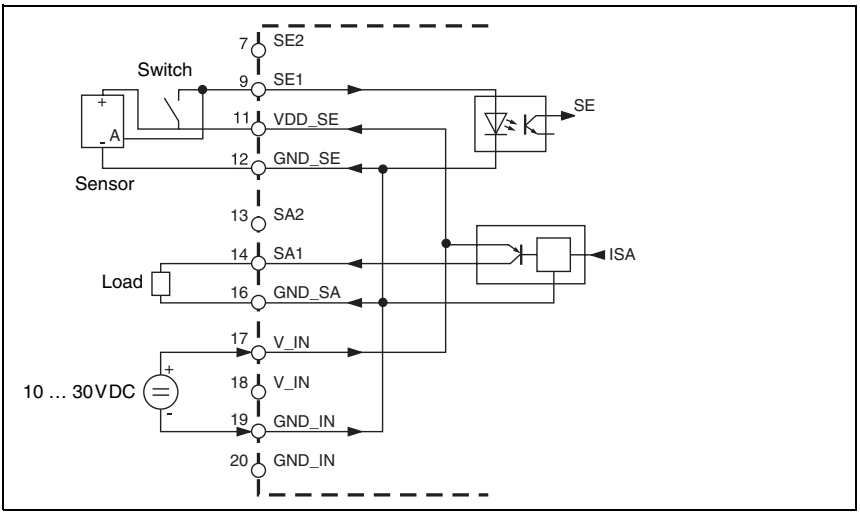

Figure 6.11: Circuitry MA 4 1xx/MA 4 D 1xx

6.3.3 Wire Lengths and Shielding

The following maximum lengths for wires and the type of shielding to be used must be observed:

Connection	Interface	Max. wire length	Shielding
BCL 21/22 - Service	RS 232	10 m	absolutely required, shield meshing
BCL 21/MA 2 - Host	RS 485	1200 m	absolutely required, flexible leads as twisted pairs
Switching inputs 1+2	–	10 m	not necessary
Switching outputs 1+2	–	10 m	not necessary

Table 6.15: Wire Lengths and Shielding

6.4 Disassembling, Packing, Disposing

Repacking

For later re-use, the device is to be packed so that it is protected against shocks and dampness. Optimal protection is achieved when using the original packaging.

Notice!

Electrical scrap is a special waste product! Observe the locally applicable regulations regarding disposal of the product.

7 Commissioning

Attention Laser Radiation!

Follow the safety notices in chapter 2.3 on page 7!

7.1 Measures to be performed prior to the initial commissioning

- *Before commissioning, familiarise yourself with the operation and configuration of the device(s)!*
- *Before switching on, recheck all connections and ensure that they have been properly made.*

Configuration elements using the example of the MA 2

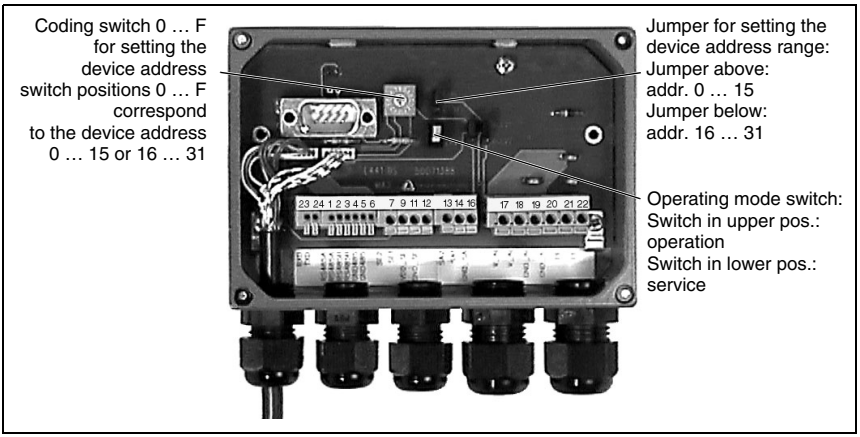

Figure 7.1: Configuration elements in the MA 2

Setting the device address

The device address is set in the MA 2/MA 4… using a rotary code switch. The setting is carried out as follows:

- *Set the device address to*
  - 0, if the combined BCL 21 / MA 2/MA 4… unit will not be operated in a network,
  - 1…30, if several BCL 21 / MA 2/MA 4… units will be operated in a network. Each multiNet plus network device must have a different device address assigned to it. If the MA 2/MA 4… is connected to the multiNet Master, the device combination BCL 21 with MA 2/MA 4… automatically turns into a multiNet plus slave device.

Notice!

Address 31 is used for resetting the parameters.

Notice!

From the hardware address, the BCL 21 detects that networking is required. With the BCL 21/22, it is possible to perform a reset using the software and the online commands. In addition, it is possible to perform a reset by switching off the supply voltage. The parameters are not lost as a result of the reset. For information on the reset commands, see chapter 9. The LED remains dark during a reset; the green LED illuminates when the device is ready for operation.

7.2 Function Test

"Power On" test

After connecting the operating voltage, the devices carry out an automatic "Power On" function test. The LED on the front side of the MA 2/MA 4… lights up. In the case of factory settings, the green LED flashes. In the additional service mode, the orange LED lights up.

Interface

Proper function of the interface can be tested easiest in service operation using the service interface with the "BCLConfig" programming software and a notebook computer. For order numbers, see chapter 5.

"Online commands"

Using the "Online" commands, important device functions can be checked, e.g. proper functioning of the laser.

Problems

Should problems occur during device commissioning, refer first to chapter 8.2. Should a problem persist after checking all electrical connections and settings on the devices and host, please contact a Leuze service office near you (see the back page of this operating manual).

7.3 Setting the Parameters

In the device combination BCL 21/22 with MA 2/MA 4…, two different parameter sets are managed:

- factory default parameter set
- current parameter set

Before a parameter set is loaded into the BCL 21/22 processor memory, the validity of the parameter set is checked using checksums.

Factory default parameter set

This parameter set contains the default settings made ex works for all BCL 21/22 parameters. It is permanently stored in the ROM of the BCL 21/22. The parameter set with the default settings is loaded into the memory of the BCL 21/22,

- the first time the device is commissioned after delivery
- following the command "Factory Default" in the parameterisation program
- if the checksums of the current parameter set are invalid.

Current parameter set

In this parameter set, the current settings for all device parameters are stored. When the BCL 21/22 is in operation, the parameter set is stored in the EEPROM of the BCL 21/22. The current set can be stored:

- by copying a valid parameter set from the host computer
- by means of an off-line setup with the PC setup program BCLConfig

The current parameter set is loaded into the memory of the BCL 21/22,

- each time the supply voltage is connected
- following a software reset

7.3.1 Service Operating Mode

Setting the required parameters is carried out easiest in the 'Service' operating mode.

Service interface

By switching the operating mode switch in the MA 2/MA 4… from operation (switch in upper pos.) to service (switch in lower pos.), the connection to the host computer is interrupted and the RS 232 interface is activated. At the BCL 22, the interface is activated via a bridge between the pins 7 and 15 on the 15-pin sub-D connector.

The connector unit MA 2/MA 4… offers a service interface for commissioning the reading stations in a network. This interface can be accessed by removing the housing cover. It has a 9-pin Sub-D connector (see figure 7.1).

Connection

A PC or terminal can be connected to the MA 2/MA 4… via the RS 232/V.24 serial interface and used to set the parameters of the BCL 21/22. The connection is made using a crossed RS 232 connection cable that establishes the RxD, TxD and GND connections. A hardware handshake via RTS, CTS is not supported at the service interface.

Service Operating Mode

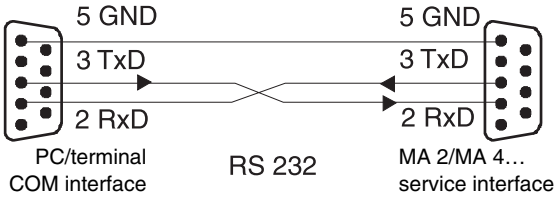

Figure 7.2: Connecting the MA 2 service interface to a PC or terminal

Notice!

The service interface contains a predefined transmission protocol with the following parameters:

- transfer rate 9600 baud
- no parity
- 8 data bits
- 1 stop bit
- prefix: STX
- postfix: CR, LF

8 Operation

Attention Laser Radiation!

Follow the safety notices in chapter 2.3 on page 7!

8.1 Display Elements

A LED labelled "SWO" is located on top of the MA 2/MA 4…. It indicates the state of the switching output 1. On the BCL 21/22, you can find three LEDs that indicate different states. For detailed information regarding the state displays of the LEDs please refer to chapter 4.2.

8.2 Error Handling

Errors are indicated on the BCL 21/22 via the ERR LED. Additional error, warning and status messages are transmitted via the Host interface.

Types of errors

Errors are divided up into the following types:

- Warnings
- Serious errors

Warnings

Warnings indicate temporary operating faults which do not affect the proper functioning of the device.

Serious errors

Serious errors impair the proper functioning of the device. The device must be reinitialised.

Troubleshooting

Isolated warnings can be ignored, since the BCL 21/22 will continue to function properly.

Following a serious error, you should re-initialise the BCL 21/22. It will then usually again function properly. If a hardware problem is present, the BCL 21/22 will not reinitialise.

Warnings and errors which occur frequently can be corrected easiest using the BCLConfig software.

If you cannot correct faults and errors with the software, please contact a Leuze electronic sales office or service facility. For addresses, please refer to the back page of this operating manual.

9 Communicating with the Device

Device parameters can be set using the automatic configuration "autoConfig", via commands at the serial interface or using the easy-to-use "BCLConfig" control software.

9.1 Installing the "BCLConfig"-software

- *Place the installation CD in your CD/DVD drive.*
- *Call up the installation file (e.g. Setup.exe)*

The following window appears:

Installation window

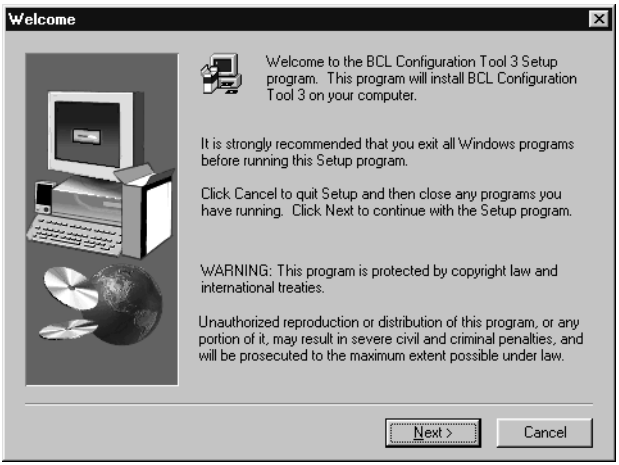

Figure 9.1: Installation window

- *Confirm the following licence agreement and select the installation path in the following window:*

Installation directory

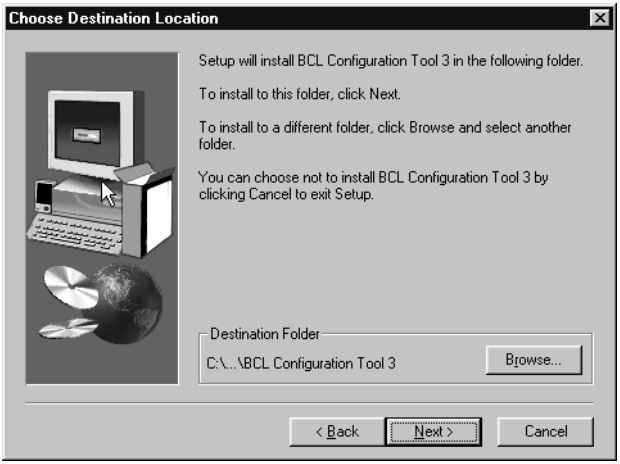

Figure 9.2: Installation directory

- *Confirm your entry with **Next**, then follow the installation routine.*
- *After the successful installation, double-click on the file "BCLconfig.exe" to activate the configuration program.*

10 Important Parameters

10.1 Code menu

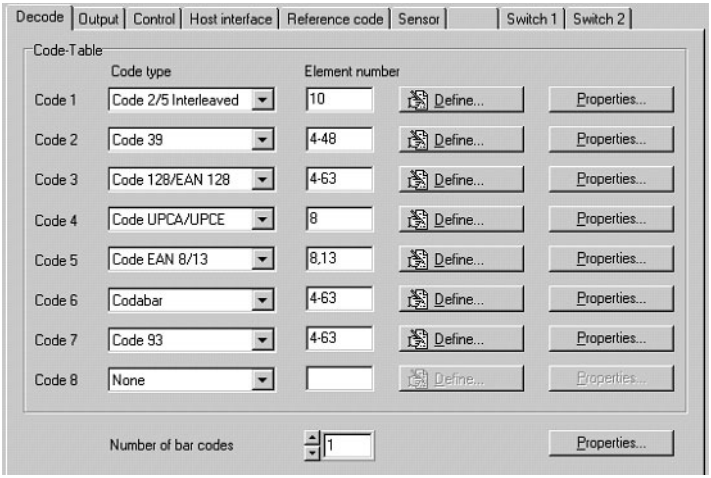

Figure 10.1: Standard setting of the code menu

Code table Here, the codes which are to be decoded are set. We recommend enabling only the code types which are to actually be read with the corresponding element numbers.
Important: Code 1 must always be selected. If multiple code types are to be used, set in sequential order: Code 1, Code 2, …

Number Of Digits In the field Element number, up to 3 element entries may be entered.

An area is represented by a dashed line:	e.g. 4-40 digits.
With 2 or 3 different element entries by a comma: e.g:	8,13 digits
The combination is also possible, but the range must be specified first:	e.g.: 4-10,20 digits

Notice!
If the code EAN128 is to be read, 3 additional characters are to be set for the code identifier.

Properties Behind the "Properties" button, to the right of the respective code, the code-specific settings, such as the check digit, can be selected.

Number of bar codes Here, the number of the bar codes to be decoded within a read cycle (one reading gate) is set.

10.1.1 Properties of the Code menu

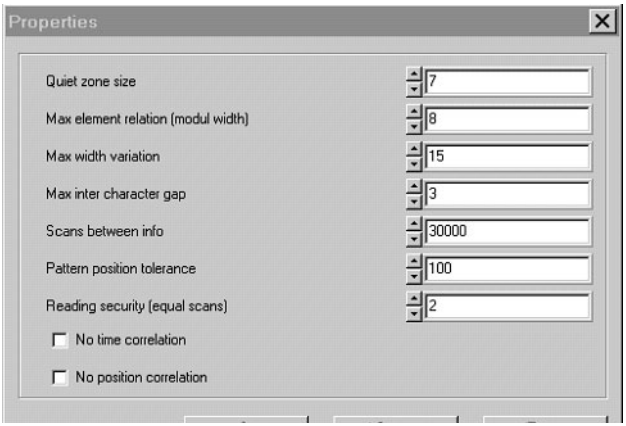

Figure 10.2: Standard setting of the properties of the code menu

Quiet zone size

Quiet zone: the area to the left and right of the bar code
Module: width of the narrowest line in the bar code
According to the code specifications, each bar code must have a quiet zone which is 10 times as wide as the module of the bar code.
Ex: for a code having a module of 0.5mm, 5mm blank space must be present at both the left and right of the code.
By default, the scanner checks a quiet zone which is 7 times greater than the module. This means that 7 times or greater is o.k.

Reading security (Equal Scans)

Specifies how often a code must be decoded before the result is valid and output. This value should be increased for inspection and test purposes only.

No time correlation

If this parameter is set, a gap between two identical labels is ignored and they are treated as a single label.

No position correlation

If this parameter is set, then the position of a bar code label in the reading beam is not taken into account. Identical labels are treated as a single label

Notice!

In general, the remaining parameters must not be changed. In the worst case, this could corrupt the reading result!

10.2 Output menu

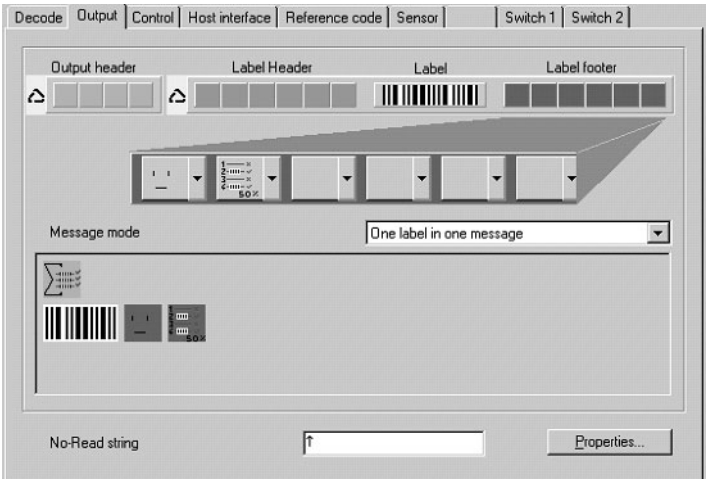

Figure 10.3: Output menu

Output header Select from the options listed below. The output header is sent in a separate message before the read result.

Label header The Label header is set directly before the code data.

Label footer The label footer is appended directly to the code data.

Message mode Selects whether the bar codes read are sent in concatenation or separately as individual strings.

Notice!
The structure of this message string is depicted symbolically in the preview window.

No read string This character is set for each unrecognised bar code. Multiple characters (=string) may be entered here. Up to 20 characters are possible.

Properties Set the desired formatting modes and formatting characters as necessary.

10.3 Control

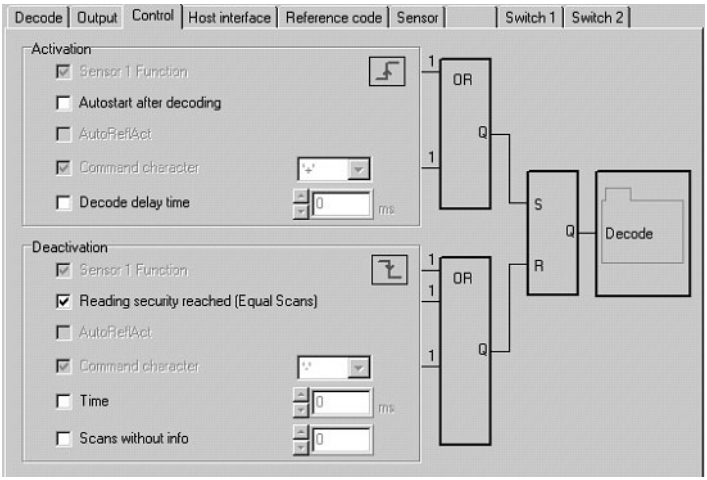

Figure 10.4: Control menu default settings

Activation

Sensor 1 function see menu "switching input"

Autostart after decoding In this mode, the scanner reads via an internal trigger signal with maximum performance. Attention: Up to 100 codes per second may be transmitted.

Command character The standard online character for the trigger start is the ´+´ character. This character can be changed only via the tree structure.

Decode delay time This point is usually used only for test purposes. After the time set here has passed, the scanner automatically reactivates itself following a reading gate end.

Deactivation

Sensor 1 function see menu "switching input"

Reading security reached (equal scans) If this item is activated, the read result is output immediately after the bar code is decoded.
If the item is deactivated, the read result is sent only after the trigger signal is returned (=end of reading gate).

Command character The standard online character for the trigger end is the ´-´ character. This character can be changed only via the tree structure.

Time For test purposes.
If the scanner is activated, the reading gate is automatically closed by the scanner after this preset time has elapsed.

Scans without info Following a successful read, the scanner waits for this number of scans (sequential scans with no read result) before it automatically deactivates itself.

10.4 Communication

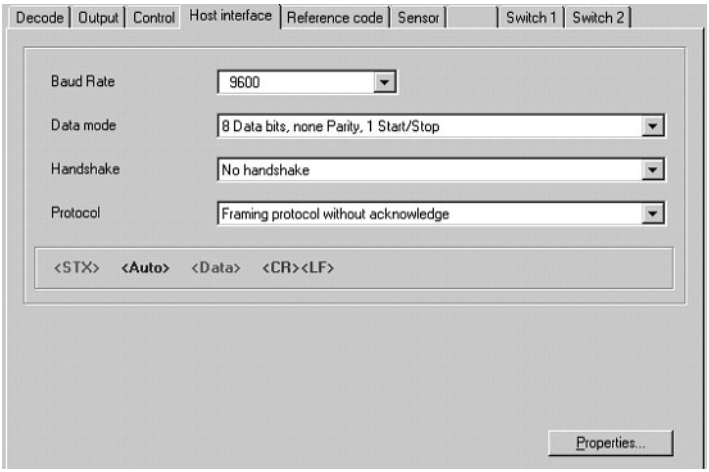

Figure 10.5: Standard setting of the communication menu

Select the desired baud rate, the stop bits, the data bits and the parity here. In addition, several different handshake modes and protocols can be set here.

The RK512/3964 protocol can also be selected here. The individual parameters for this protocol can be found in the tree-structure configuration: Communication -> Customer Interface -> 3964 / RK 512 Protocol

Attention!

If the BCL 21 is operated in a network ("Leuze multiNet"), no changes may be made here. The scanner automatically sets itself to the multiNet protocol!

10.4.1 Communication properties

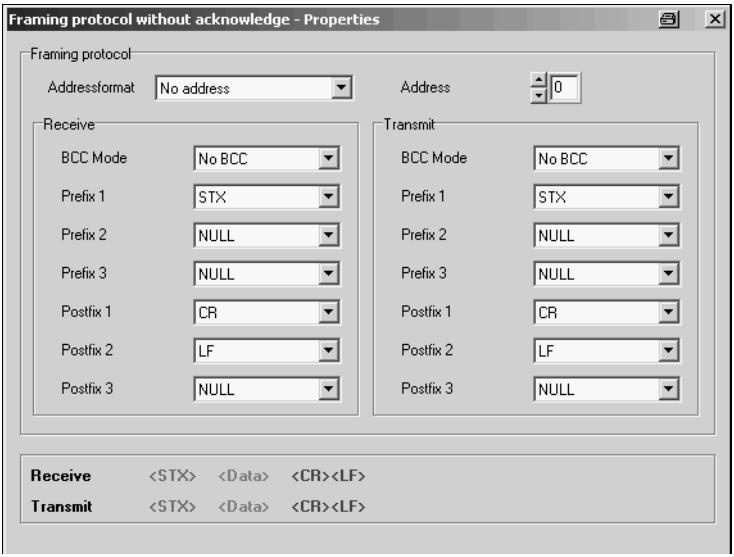

Figure 10.6: Standard setting of the property menu

Here, the frame format (prefix/postfix), the address mode as well as a BCC mode can be set.

Attention!

If the BCL 21 is operated in a network ("Leuze multiNet"), no changes may be made here.

10.5 Reference code

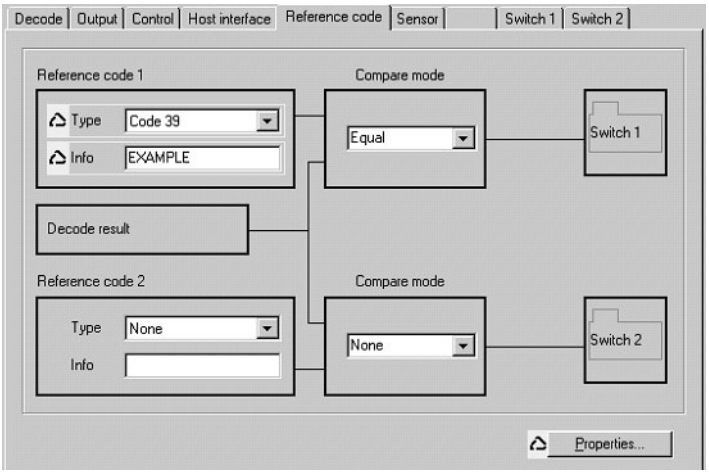

Figure 10.7: Reference code menu

A reference code is bar code information which is stored in the memory of the scanner.

This reference code can be compared with the current decoded bar code in various modes and, thus, the switching output be set appropriately. To do this, the switching output must still be set to "By comparison of reference code X" in the "Switch" menu.

One way to store the reference code is to enter it manually in this menu. You can find further options of the reference code teach-in in the chapter on online commands.

Type Select the code type.

Info Contents of the reference code

Compare mode Select here how the internally stored reference code is to be compared with the decoded result.
-> For additional comparison possibilities, please select the "Properties" menu

10.6 Switching input

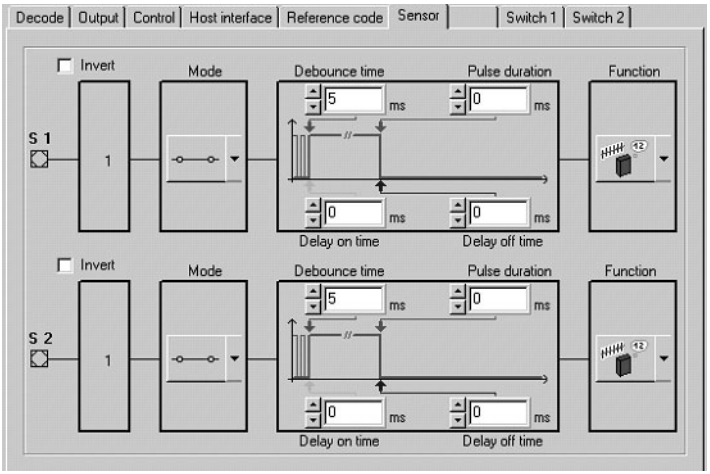

Figure 10.8: Standard setting of the switching input menu

Invert Here, the input level can be inverted.

Enable Switching input enabled or disabled.

Debounce time This time period must lapse until the trigger signal is regarded as valid.

Delay on time The trigger signal is passed on delayed by the specified time period.

Pulse duration If the value is higher than "0": duration of the activation, regardless of how long the trigger signal has been present.

Delay off time After the end of the trigger signal, the pulse is extended internally by this time period.

Notice!
If the switch-off delay is activated, the parameter "pulse duration" should be "0".

Function Event that is started when the switching input is activated.

10.7 Switching output

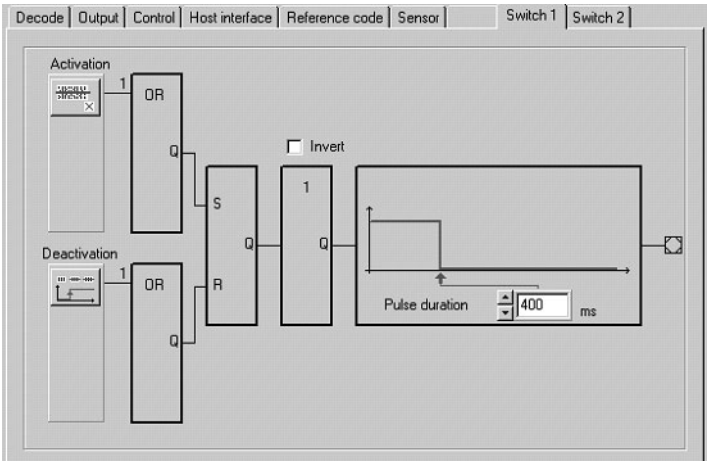

Figure 10.9: Standard setting of the switching output menu

Activation Select the desired event which is to initiate the switching of the switching output here. Multiple events can also be simultaneously activated.

Deactivation Shown here is the event which results in the switching output being reset (if the set pulse duration has not yet expired). Multiple events can also be simultaneously activated.

Invert Level inverted

Pulse duration Duration of the switching output impulse. A value of "0" in this position indicates a static level, i.e., the signal remains present until the deactivation event occurs.

11 Online commands

11.1 Overview of Commands and Parameters

Online commands can be used to send commands directly to the device for control and configuration.

For this the BCL 21/22 with MA 2/MA 4… must be connected to a host or service computer via the serial interface. The commands described can be sent either via the host or the service interface.

For information on the transmission protocol, please see chapter 7.3.1.

Online commands

With the commands, you can

- control/decode.
- read/write/copy parameters.
- carry out an automatic configuration.
- call up error messages.
- call up statistical device information.
- carry out a software reset in order to reinitialise the device.

Syntax

"Online" commands consist of one or two ASCII characters followed by command parameters.

No separation characters may be entered between the command and the command parameter(s). Both small and capitalised letters can be used.

Example:

Command **'CA'**: autoConfig function

Parameter **'+'**: Activation

Transmitted is: **'CA+'**

Notation

Commands, command parameters and returned data are enclosed between single quotation marks ' ' in the text of this manual.

Most online commands are acknowledged by the BCL 21/22 and any requested data returned. For commands that are not acknowledged, command execution can be observed or monitored directly on the device.

11.1.1 General 'Online' Commands

Software version number

Command	’V’
Description	Requests device version information
Parameter	no
Acknowledge-ment	**’BCL 2x V 01.00 08.01.1999’** The device type appears in the first line followed by the device's version number and date. (The data which are actually displayed may vary from the values given here.)

Notice!

Using this command, you can check whether the connected host or service computer is properly connected and configured. If you do not receive an acknowledgement, please check interface connections, protocol and service switches.

Software reset

Command	’H’
Description	Carries out a software reset. The device is restarted and reinitialised, leaving it in the same state as when the supply voltage is switched on.
Parameter	no
Acknowledge-ment	**’S’** (start signal)

autoConfig

Command	’CA’
Description	Activates or deactivates the 'autoConfig' function. Certain label reading parameters are programmed automatically in the setup by the labels which are read while the 'autoConfig' function is active.
Parameter	**’+’** activates ’autoConfig’ **’/’** rejects the last code read **’-’** deactivates ’autoConfig’ and stores the decoded data in the current parameter set.
Acknowledge-ment	**’CSx’** **x**: Status **’0’** valid **’CA’** command **’1’** invalid command **’2’** autoConfig could not be activated **’3’** autoConfig could not be deactivated **’4’** result could not be deleted
Description	**’xx yy zzzzzz’** **xx**: No. of digits of the read code **yy** Code type of the read code **’01’** 2/5 Interleaved **’02’** Code 39 **’06’** UPC (A, E) **’07’** EAN **’08’** Code 128, EAN 128 **’10’** EAN/UPC **’11’** Codabar **zzzzzz** Contents of the decoded label. The ↑ appears if the label was not correctly read.

Code recognition

Command	**'CC'**
Description	Detects an unknown bar code and outputs number of digits, code type, and code information to the interface, without storing it in the parameter memory.
Parameter	no
Acknowledge-ment	**'xx yy zzzzzz'** **xx**: No. of digits of the read code **yy**: Code type of the read code **'01'** 2/5 Interleaved **'02'** Code 39 **'06'** UPC (A, E) **'07'** EAN **'08'** Code 128, EAN 128 **'10'** EAN/UPC **'11'** Codabar **zzzzzz**: Contents of the decoded label. The ↑ appears if the label was not correctly read.

Alignment mode

Command	**'JP'**
Description	This command is used for the easy mounting and alignment of the BCL 21/22. After the function has been activated by **'JP+'**, the scanner continuously supplies status information via the serial interfaces. With this online command, the scanner is set to terminate the decoding after 100 successfully decoded labels and output the status information. Subsequently, the read process is reactivated automatically. As status, the output returns the following values: • scans which contain the valid label information on the basis of 100 scans, • the decoding result. These values can be used to determine the decoding quality. In addition to the output of the status information, the laser beam is used to display the reading quality. Depending on how many labels were able be extracted, the duration of the laser's "off" time increases. If the reading quality is high, the laser beam flashes in brief, regular intervals. The worse the decoder decodes, the longer the pauses become during which the laser is switched off. The flashing intervals become more and more irregular because the laser may, in total, be active for longer to extract more labels. The duration of the pauses has been stepped in such a way that they can be distinguished by the eye.
Parameter	**'+'**: starts the adjustment mode. **'-'**: ends the adjustment mode.
Acknowledge-ment	**'xxxxx_yyyyy'** **xxxxx**: "Scans since reading gate release" (scans_with info): Number of scans that contain valid label information. The maximum value is 100. It indicates for how many of 100 scans valid label information could be ascertained. **yyyyy**: Bar code information.

Manual definition of the reference code

Command	RS
Description	This command can be used to define a new reference code in the BCL 21/22 by means of direct input via the serial interface. The data are saved in the parameter set according to their input under reference code 1 through 9 and stored in the working buffer for direct further processing.
Parameter	**'RSyvxxzzzzzzzz'** **y**, **v, x** and **z** are placeholders (variables) for the actual input. **y**: def. reference code No. **'1'** (Code 1) **'2'** (Code 2) ... **'9'** (Code 9) **v** Storage location for reference code: **'0'** RAM+EEPROM, **'3'** RAM only **xx** def. Code type (see command 'CA') **z** def. Code information (1 … 63 characters)
Acknowledge-ment	**'RSx'** **x**: Status **'0'** valid 'Rx' command **'1'** invalid command **'2'** insufficient memory for reference code **'3'** reference code has not been saved **'4'** reference code invalid
Example	Input = 'RS130678654331' (Code 1 (1), RAM only (3), UPC (06), code information

Teach-In

Command	’RT’
Description	This command enables a reference code to be defined quickly by reading an example label.
Parameter	**’RTy’** **y**: Function **’1’** defines reference code 1 **’2’** defines reference code 2 … **’9’** defines reference code 9 **’+’** activates the definition of reference code 1 up to the value of Parameter no_of_labels **’-’** Exit the Teach-In process
Acknowledgement	The BCL first responds with the command **’RS’** and corresponding status (see command RS). After a barcode has been read, it sends the result in the following format: **’RCyvxxzzzzz’** **y**, **v, x** and **z** are placeholders (variables) for the actual input. **y**: def. reference code No. **’1’** (Code 1) … **’9’** (Code 9) **v**: Storage location for reference code **’0’** RAM+EEPROM, **’3’** RAM only **xx** def. Code type (see command ’CA’) **z** def. Code information (1 … 63 characters)

Notice!

With this function, only code types are recognised that are identified using the autoConfig function or which were set in the set-up.

↳ *After each reading via an ’RTx’ command, explicitly switch off the function again since failure to do so will interfere with other commands as well as prevent execution of a new ’RTx’ command.*

Reading a reference code

Command	’RR’
Description	The command reads out the reference code defined in the BCL. If no parameters are specified, all defined codes are output.
Parameter	<Reference code number> **’1’ ... ’9’** value range of reference codes 1 to 9
Acknowledge-ment	If no reference codes are defined, the BCL responds with the **’RS’** command and corresponding status (see command RS)**.** For valid codes, the output corresponds to the following format: **RCyvxxzzzzzz** **y**, **v, x** and **z** are placeholders (variables) for the actual input. **y**: def. reference code No. **’1’** (Code 1) … **’9’** (Code 9) **v**: Storage location for reference code **’0’** RAM+EEPROM, **’3’** RAM only **xx** def. Code type (see command ’CA’) **z** def. Code information (1 … 63 characters)

Copy parameter set

Command	’PC’
Description	The command copies complete parameter sets.
Parameter	**’03’** copy parameters from the EEPROM into the RAM and initialise all associated functions **'20'** copy standard parameters from the FLASH into the EEPROM **and** RAM and initialise all relevant functions **’30’** copy parameters from the RAM into the EEPROM
Acknowledge-ment	**’PSx’** **x**: Status **'0'** valid transmission **'1'** invalid message **'2'** invalid length of message **'3'** invalid block check type **'4'** invalid block check checksum **'5'** invalid data length **'6'** invalid message data **'7'** invalid start address **'8'** invalid parameter set **'9'** invalid parameter type
Example	Input: **PC20** –> all parameters are reset to default values.

11.1.2 'Online' Commands for System Control

System Standby

Command	**'SS'**
Description	System Standby: puts the bar code reader in standby mode. The scanner cannot be triggered, and the polygon wheel motor is stopped.
Parameter	no
Acknowledge-ment	no

System boot-up

Command	**'SA'**
Description	System boot-up: reactivates the bar code reader from standby mode back to operating mode. The polygon wheel motor is started, the scanner works as usual.
Parameter	no
Acknowledge-ment	**'S'** (start signal)

Activate sensor input 1

Command	**'+'**
Description	The command activates decoding.
Parameter	no
Acknowledge-ment	no

Deactivate sensor input 1

Command	**'-'**
Description	The command deactivates decoding.
Parameter	no
Acknowledge-ment	no

Activate sensor input 2

Command	**','**
Description	The command activates the definition of reference code 1.
Parameter	no
Acknowledge-ment	no

Deactivate sensor input 2

Command	’.’
Description	The command deactivates the definition of reference code 1.
Parameter	no
Acknowledge-ment	no

Activate switching output

Command	’OA’
Description	The command activates a selected switching output.
Parameter	**’OAx’**: Activate switching output **x**: Switching output No. **’1’** (output 1) **’2’** (output 2)
Acknowledge-ment	no

Deactivate switching output

Command	’OD’
Description	The command deactivates a selected switching output.
Parameter	**’ODx’**: Deactivate switching output **x**: Switching output No.: **’1’** (output 1) **’2’** (output 2)
Acknowledge-ment	no

11.1.3 ’Online’ Commands for System Checking

Query: Supply Voltage

Command	**’DUV’**
Description	Queries the supply voltage with which the bar code reader is supplied.
Parameter	no
Acknowledge-ment	**’DUVxx.x’** **xx.x**: Voltage value, for example 28.2 for 28.2 Volt.

Diagnosis motor

Command	’DM’
Description	The command requests the operational data of the motor. In addition, the motor can be switched on and off
Parameter	**’S’** Request rotary frequency of the motor. (Message from host) **’Cxxxxx’** Transmission of the motor RPM as a decimal number with 5 digits. (Message to host)
Acknowledge-ment	**’Sxxxxx’**
Description	**xxxxx** is the current rotary frequency of the motor in revolutions per minute. In case of malfunction, the BCL responds with the command **’DS’** and the corresponding status. (See command ’DS’)

Status message for diagnosis commands

Command	’DS’
Description	The command serves as an acknowledgement message to the host. The command contains as a two-digit decimal number an acknowl-edgement status which provides information about the processing of the requested diagnosis function.
Parameter	**’0’** valid processing **’1’** invalid diagnostic message **’2’** message too long **’3’** invalid message parameter of the laser diagnosis command **’4’** invalid length of the laser diagnosis message **’5’** invalid message parameter of the motor diagnosis command **’6’** invalid length of the motor diagnosis message

11.1.4 ’Online’ command for querying error messages

Query memory error messages

Command	’ER’
Description	The command queries the buffer memory of the error messages.
Parameter	no
Acknowledge-ment	1st line: **New: cc** 2nd through 11th lines: **’- 00.000’** if no error has occurred **’F tt.fff’** if a fatal error has occurred **’E tt.fff’** if an error has occurred **’C tt.fff’** if a critical warning has occurred **’W tt.fff’** if a warning has occurred
Description	**cc**: number of (new) errors in the error buffer **tt**: task/ function number **fff**: error number Upon output, the counter for the number of errors in the error buffer is deleted, but not the buffer itself!

Notice!

If an error occurs, note the error number and contact your local Leuze service organisation. The addresses can be found on the back page of this operating manual.

12 Maintenance

12.1 General Maintenance Information

The bar code reader BCL 21/22 and the connector unit MA 2/MA 4… normally should not require any maintenance by the user.

Cleaning

Should it become soiled, clean the glass window of the BCL 21/22 with a soft cloth.

Notice!

Do not use aggressive cleaning agents such as thinner or acetone for cleaning the device.

12.2 Repairs, Servicing

Repairs to the device must only be carried out by the manufacturer.

↳ *Contact your Leuze distributor or service organisation should repairs be required. For addresses, please refer to the back page of this operating manual.*

13 Appendix

13.1 ASCII Table

ASCII	Dec.	Hex.	Oct.	Designation	Meaning
NUL	0	00	0	NULL	Null
SOH	1	01	1	START OF HEADING	Start of heading
STX	2	02	2	START OF TEXT	Start of text characters
ETX	3	03	3	END OF TEXT	Last character of text
EOT	4	04	4	END OF TRANSMISS.	End of transmission
ENQ	5	05	5	ENQUIRY	Request for data trans.
ACK	6	06	6	ACKNOWLEDGE	Positive acknowledgement
BEL	7	07	7	BELL	Bell signal
BS	8	08	10	BACKSPACE	Backspace
HT	9	09	11	HORIZ. TABULATOR	Horizontal tabulator
LF	10	0A	12	LINE FEED	Line feed
VT	11	0B	13	VERT. TABULATOR	Vertical tabulator
FF	12	0C	14	FORM FEED	Form feed
CR	13	0D	15	CARRIAGE RETURN	Carriage return
SO	14	0E	16	SHIFT OUT	Shift out
SI	15	0F	17	SHIFT IN	Shift in
DLE	16	10	20	DATA LINK ESCAPE	Data link escape
DC1	17	11	21	DEVICE CONTROL 1	Device control character 1
DC2	18	12	22	DEVICE CONTROL 2	Device control character 2
DC3	19	13	23	DEVICE CONTROL 3	Device control character 3
DC4	20	14	24	DEVICE CONTROL 4	Device control character 4
NAK	21	15	25	NEG. ACKNOWLEDGE	Negative acknowledge
SYN	22	16	26	SYNCRONOUS IDLE	Synchronization
ETB	23	17	27	EOF TRANSM. BLOCK	End of data transmission block
CAN	24	18	30	CANCEL	Invalid
EM	25	19	31	END OF MEDIUM	End of medium
SUB	26	1A	32	SUBSTITUTE	Substitution
ESC	27	1B	33	ESCAPE	Escape
FS	28	1C	34	FILE SEPARATOR	File separator
GS	29	1D	35	GROUP SEPARATOR	Group separator
RS	30	1E	36	RECORD SEPARATOR	Record separator

ASCII	Dec.	Hex.	Oct.	Designation	Meaning
US	31	1F	37	UNIT SEPARATOR	Unit separator
SP	32	20	40	SPACE	Space
!	33	21	41	EXCLAMATION POINT	Exclamation point
"	34	22	42	QUOTATION MARK	Quotation mark
#	35	23	43	NUMBER SIGN	Number sign
$	36	24	44	DOLLAR SIGN	Dollar sign
%	37	25	45	PERCENT SIGN	Percent sign
&	38	26	46	AMPERSAND	Ampersand
’	39	27	47	APOSTROPHE	Apostrophe
(	40	28	50	OPEN. PARENTHESIS	Open parenthesis
)	41	29	51	CLOS. PARENTHESIS	Closed parenthesis
*	42	2A	52	ASTERISK	Asterisk
+	43	2B	53	PLUS	Plus sign
,	44	2C	54	COMMA	Comma
-	45	2D	55	HYPHEN (MINUS)	Hyphen
.	46	2E	56	PERIOD (DECIMAL)	Period (decimal)
/	47	2F	57	SLANT	Slant
0	48	30	60	0	Number
1	49	31	61	1	Number
2	50	32	62	2	Number
3	51	33	63	3	Number
4	52	34	64	4	Number
5	53	35	65	5	Number
6	54	36	66	6	Number
7	55	37	67	7	Number
8	56	38	70	8	Number
9	57	39	71	9	Number
:	58	3A	72	COLON	Colon
;	59	3B	73	SEMI-COLON	Semi-colon
<	60	3C	74	LESS THAN	Less than
=	61	3D	75	EQUALS	Equals
>	62	3E	76	GREATER THAN	Greater than
?	63	3F	77	QUESTION MARK	Question mark
@	64	40	100	COMMERCIAL AT	Commercial AT
A	65	41	101	A	Capital letter

ASCII	Dec.	Hex.	Oct.	Designation	Meaning
B	66	42	102	B	Capital letter
C	67	43	103	C	Capital letter
D	68	44	104	D	Capital letter
E	69	45	105	E	Capital letter
F	70	46	106	F	Capital letter
G	71	47	107	G	Capital letter
H	72	48	110	H	Capital letter
I	73	49	111	I	Capital letter
J	74	4A	112	J	Capital letter
K	75	4B	113	K	Capital letter
L	76	4C	114	L	Capital letter
M	77	4D	115	M	Capital letter
N	78	4E	116	N	Capital letter
O	79	4F	117	O	Capital letter
P	80	50	120	P	Capital letter
Q	81	51	121	Q	Capital letter
R	82	52	122	R	Capital letter
S	83	53	123	S	Capital letter
T	84	54	124	T	Capital letter
U	85	55	125	U	Capital letter
V	86	56	126	V	Capital letter
W	87	57	127	W	Capital letter
X	88	58	130	X	Capital letter
Y	89	59	131	Y	Capital letter
Z	90	5A	132	Z	Capital letter
[	91	5B	133	OPENING BRACKET	Opening bracket
\	92	5C	134	REVERSE SLANT	Reverse slant
]	93	5D	135	CLOSING BRACKET	Closing bracket
^	94	5E	136	CIRCUMFLEX	Circumflex
_	95	5F	137	UNDERSCORE	Underscore
‘	96	60	140	GRAVE ACCENT	Grave accent
a	97	61	141	a	Lower case letter
b	98	62	142	b	Lower case letter
c	99	63	143	c	Lower case letter
d	100	64	144	d	Lower case letter

ASCII	Dec.	Hex.	Oct.	Designation	Meaning
e	101	65	145	e	Lower case letter
f	102	66	146	f	Lower case letter
g	103	67	147	g	Lower case letter
h	104	68	150	h	Lower case letter
i	105	69	151	i	Lower case letter
j	106	6A	152	j	Lower case letter
k	107	6B	153	k	Lower case letter
l	108	6C	154	l	Lower case letter
m	109	6D	155	m	Lower case letter
n	110	6E	156	n	Lower case letter
o	111	6F	157	o	Lower case letter
p	112	70	160	p	Lower case letter
q	113	71	161	q	Lower case letter
r	114	72	162	r	Lower case letter
s	115	73	163	s	Lower case letter
t	116	74	164	t	Lower case letter
u	117	75	165	u	Lower case letter
v	118	76	166	v	Lower case letter
w	119	77	167	w	Lower case letter
x	120	78	170	x	Lower case letter
y	121	79	171	y	Lower case letter
z	122	7A	172	z	Lower case letter
{	123	7B	173	OPENING BRACE	Opening brace
|	124	7C	174	VERTICAL LINE	Vertical line
}	125	7D	175	CLOSING BRACE	Closing brace
~	126	7E	176	TILDE	Tilde
DEL	127	7F	177	DELETE (RUBOUT)	Delete

Table 13.1: ASCII Table

13.2 Example Bar Code Label Types

13.2.1 Module 0.3

Code type 01: Interleaved 2 of 5

Modul 0,3

1122334455

Code type 02: Code 39

Modul 0,3

135AC

Code type 11: Codabar

Modul 0,3

A1213314A

Code 128

Modul 0,3

abcde

Code type 08: EAN 128

Modul 0,3

leuze

Code type 06: UPC-A

SC 2

1 23456 78901 2

Code type 07: EAN 8

SC 3

3456 7890

Code type 10: EAN 13 Add-on

SC 0 S

77889

1 122334 455666

Figure 13.1: Bar code sample labels (module 0.3)

13.2.2 Module 0.5

Code type 01: Interleaved 2 of 5

Modul 0,5

6677889900

Code type 02: Code 39

Modul 0,5

246BD

Code type 11: Codabar

Modul 0,5

A1511617A

Code 128

Modul 0,5

fghij

Code type 08: EAN 128

Modul 0,5

LEUZE

Code type 06: UPC-A

SC 4

0 98765 43219 8

Code type 07: EAN 8

SC 6

9876 5430

Code type 10: EAN 13 Add-on

SC 2

44332

0 099887 766550

Figure 13.2: Bar code sample labels (module 0.5)

13.3 Declaration of Conformity BCL 21/22

Leuze electronic

EG-Konformitätserklärung
EC-Declaration of conformity

Hersteller:
Manufacturer:

Leuze electronic GmbH + Co KG
In der Braike 1
73277 Owen / Teck
Deutschland

erklärt, unter alleiniger Verantwortung, dass die folgenden Produkte:
declares under its sole responsibility, that the following products:

Gerätebeschreibung:
Description of Product:

BCL 2x

folgende Richtlinien und Normen entsprechen.
are in conformity with the standards an directives:

Zutreffende EG-Richtlinien:
Applied EC-Directive:

89/336/EWG	EMV-Richtlinie
73/23/EWG	Niederspannungs-Richtlinie

Angewandte harmonisierte Normen:
Applied harmonized standards:

EN 61000-6-2:2001	EMV Fachgrundnormen Störfestigkeit Industrie
EN 61000-6-3:2001	EMV-Fachgrundnormen Störaussendung Mischgebiete

EN 55022:1998 + A1:2000 + A2:2003	EMV-Funkstöreigenschaften ITE-Produkte
EN 55024:1998 + A1:2001 + A2:2003	EMV-Störfestigkeit, ITE-Produkte
EN 61000-4-2:1995 + A1:1998 + A2:2001	Entladung statischer Elektrizität (ESD)
EN 61000-4-3:2002 + A1:2002	Hochfrequente elektromagnetischer Felder
EN 61000-4-4:2004	Schnelle transiente elektr. Störgrößen (Brust)
EN 61000-4-6:1996 + A1:2001	Leitungsgeführte Störgrößen
EN 60825-1:1994 + A1:2002 + A2:2001	Sicherheit von Lasereinrichtungen

Leuze electronic GmbH + Co KG
Postfach 11 11
In der Braike 1
73277 Owen / Teck
Deutschland

Owen, den 31.1.06

Michael Heyne (Geschäftsführer)
(managing director)

Reg.-Nr. 2922-02
Leuze electronic GmbH + Co KG
In der Braike 1
D-73277 Owen-Teck
Telefon (0 70 21) 57 30
Telefax (0 70 21) 57 31 99
http://www.leuze.de
info@leuze.de

Die Gesellschaft ist eine Kommanditgesellschaft
mit Sitz in Owen. Registergericht Kirchheim-Teck, HRA 712
Persönlich haftende Gesellschafterin ist die
Leuze-electronic Geschäftsführungs-GmbH mit Sitz in Owen
Registergericht Kirchheim-Teck, HRB 550
Geschäftsführer: Michael Heyne (Sprecher), Dr. Harald Grübel
Vorsitzender des Verwaltungsrats: Meinert Hahnemann

Deutsche Bank AG Stuttgart
Volksbank Kirchheim-Nürtingen
Kreissparkasse Esslingen-Nürtingen
Postgiro Stuttgart

Steuer-Nr. 69026 / 10630
USt.-IdNr. DE 145912521

13 33 624 (BLZ 600 700 70)
310 800 005 (BLZ 612 901 20)
10 399 220 (BLZ 611 500 20)
0 014 890 702 (BLZ 600 100 70)

Figure 13.3: Declaration of Conformity BCL 21/22

Leuze electronic

Leuze electronic GmbH + Co. KG
P.O. Box 1 1 11, D-73277 Owen/Teck
Tel. +49(0)7021/573-0,
Fax +49(0)7021/573-199
E-mail: info@leuze.de, www.leuze.de

Sales and Service

Sales Region North
Phone 07021/573-306
Fax 07021/9850950

Postal code areas
20000-38999
40000-53999
54000-55999
56000-65999
97000-97999

Sales Region East
Phone 035027/629-106
Fax 035027/629-107

Postal code areas
01000-19999
39000-39999
98000-99999

Sales Region South
Phone 07021/573-307
Fax 07021/9850911

Postal code areas
66000-96999

Worldwide

AR (Argentina)
Nortécnica S. R. L.
Tel. Int. + 54 (0) 11/4757-3129
Fax Int. + 54 (0) 11/4757-1088

AT (Austria)
Ing. Franz Schmachtl KG
Tel. Int. + 43 (0) 7 32/7646-0
Fax Int. + 43 (0) 7 32/785036

AU + NZ (Australia + New Zealand)
Balluff-Leuze Pty. Ltd.
Tel. Int. + 61 (0) 3 /97642366
Fax Int. + 61 (0) 3 /97533262

BE (Belgium)
Leuze electronic nv/sa
Tel. Int. + 32 (0) 2 /2531600
Fax Int. + 32 (0) 2 /2531536

BR (Brasil)
Leuze electronic Ltda.
Tel. Int. + 55 (0) 11 /4195-6134
Fax Int. + 55 (0) 11/4195-6177

CH (Switzerland)
Leuze electronic AG
Tel. Int. + 41 (0) 44 /8340204
Fax Int. + 41 (0) 44 /8332626

CL (Chile)
Imp. Tec. Vignola S.A.I.C.
Tel. Int. + 56 (0) 32/ 351111
Fax Int. + 56 (0) 32/351128

CN (China)
Leuze electronic GmbH + Co. KG
Shanghai Representative Office
Tel. Int. + 86 (0)21/68880920
Fax Int. + 86 (0)21/68880919

CO (Colombia)
Componentes Electronicas Ltda.
Tel. Int. + 57 (0) 4/3 511049
Fax Int. + 57 (0) 4/3511019

CZ (Czech Republic)
Schmachtl CZ s.r.o.
Tel. Int. + 420 (0) 2 /44001500
Fax Int. + 420 (0) 2 /44910700

DK (Denmark)
Desim Elektronik APS
Tel. Int. + 45/ 70220066
Fax Int. + 45/ 70222220

ES (Spain)
Leuze electronic S.A.
Tel. Int. + 34 93 /4097900
Fax Int. + 34 93/4905820

FI (Finland)
SKS-automaatio Oy
Tel. Int. + 3 58 (0) 9/852661
Fax Int. + 358 (0) 9/8526820

FR (France)
Leuze electronic sarl.
Tel. Int. + 33 (0) 1/ 60051220
Fax Int. + 33 (0) 1/60050365

GB (United Kingdom)
Leuze Mayser electronic Ltd.
Tel. Int. + 44 (0) 14 80/408500
Fax Int. + 44 (0) 1480/403808

GR (Greece)
UTECO A.B.E.E.
Tel. Int. + 30 (0) 210 /4210050
Fax Int. + 30 (0) 210/4212033

HK (Hong Kong)
Sensortech Company
Tel. Int. + 852/ 26510188
Fax Int. + 852/26510388

HU (Hungary)
Kvalix Automatika Kft.
Tel. Int. + 36 (0) 1/ 2722242
Fax Int. + 36 (0) 1/2722244

IL (Israel)
Galoz electronics Ltd.
Tel. Int. + 9 72 (0) 3/9023456
Fax Int. + 972 (0) 3/9021990

IN (India)
Global Tech (India) Pvt. Ltd.
Tel. Int. + 91 (0) 20 /24470085
Fax Int. + 91 (0) 20 /24470086

IR (Iran)
Tavan Ressan Co. Ltd.
Tel. Int. + 98 (0) 21 /2606766
Fax Int. + 98 (0) 21/2002883

IT (Italy)
Leuze electronic S.r.l.
Tel. Int. + 39 02 /26110643
Fax Int. + 39 02/26110640

JP (Japan)
C. Illies & Co., Ltd.
Tel. Int. + 81 (0) 3 /34434111
Fax Int. + 81 (0) 3 /34434118

KR (South Korea)
Leuze electronic Co., Ltd.
Tel. Int. + 82 (0) 31/ 3828228
Fax Int. + 82 (0) 31/3828522

MX (Mexico)
Leuze Lumiflex México, S.A. de C.V.
Tel. Int. + 52 (0) 81/83 71 86 16
Fax Int. + 52 (0) 81/83 71 85 88

MY (Malaysia)
Ingermark (M) SDN.BHD
Tel. Int. + 60 (0) 3 /60342788
Fax Int. + 60 (0) 3 /60342188

NL (Netherlands)
Leuze electronic B.V.
Tel. Int. + 31 (0) 418 /653544
Fax Int. + 31 (0) 418/653808

NO (Norway)
Elteco AS
Tel. Int. + 47 (0) 35 /562070
Fax Int. + 47 (0) 35/562099

PL (Poland)
Balluff Sp. z. o. o.
Tel. Int. + 48 (0) 22/8331564
Fax Int. + 48 (0) 22/8330969

PT (Portugal)
LA2P, Lda.
Tel. Int. + 351 (0) 21/ 4447070
Fax Int. + 351 (0) 21/4447075

RO (Romania)
O´Boyle s.r.l.
Tel. Int. + 40 (0) 56 /201346
Fax Int. + 40 (0) 56 /221036

RU (Russian Federation)
All Impex
Tel. Int. + 7 495 9645164
Fax Int. + 7 495 6031312

SE (Sweden)
Leuze SensorGruppen AB
Tel. + 46 (0) 8 /7315190
Fax + 46 (0) 8/7315105

SG + PH + ID (Singapore + Philippines + Indonesia)
Balluff Asia Pte. Ltd.
Tel. Int. + 65 /62524384
Fax Int. + 65/62529060

SI (Slovenia)
Tipteh d.o.o.
Tel. Int. + 3 86 (0) 1/2005150
Fax Int. + 386 (0) 1/2005151

SK (Slovakia)
Schmachtl SK s.r.o.
Tel. Int. + 421 (0) 2/ 58275600
Fax Int. + 421 (0) 2/ 58275601

TH (Thailand)
Industrial Electrical Co. Ltd.
Tel. Int. + 66 (0) 2/ 642-6700
Fax Int. + 66 (0) 2/642-4249

TR (Turkey)
Balluff Sensör Ltd. Sti.
Tel. Int. + 90 (0) 212/3200411
Fax Int. + 90 (0) 212/3200416

TW (Taiwan)
Great Cofue Technology Co., Ltd.
Tel. Int. + 886 (0) 2/ 29838077
Fax Int. + 886 (0) 2/29853373

UA (Ukraine)
Beverly-Foods Ltd.
Tel. Int. + 38 044/ 5255927
Fax Int. + 38 044/5257807

US + CA (United States + Canada)
Leuze Lumiflex Inc.
Tel. Int. + 1 (0) 248/ 4864466
Fax Int. + 1 (0) 248/ 4866699

ZA (South Africa)
Countapulse Controls (PTY.) Ltd.
Tel. Int. + 27 (0) 11/6157556
Fax Int. + 27 (0) 11/6157513

GB 099/02 – 06/06 Part. No. 500 82 282