Leuze electronic

the sensor people

SMART SENSOR BUSINESS

BPS 304i

Bar Code Positioning System

EN 2018/01 - 50126567
We reserve the right to
make technical changes

Original operating instructions

ПРОМЭЛЕКТРОНИКА / sales@prom-elec.com

© 2018
Leuze electronic GmbH + Co. KG
In der Braike 1
D-73277 Owen / Germany
Phone: +49 7021 573-0
Fax: +49 7021 573-199
http://www.leuze.com
info@leuze.de

1 About this document . . . 6
1.1 Used symbols and signal words . . . 6

2 Safety . . . 8
2.1 Intended use . . . 8
2.2 Foreseeable misuse . . . 8
2.3 Competent persons . . . 9
2.4 Exemption of liability . . . 9
2.5 Laser warning notices . . . 9

3 Device description . . . 12
3.1 Device overview . . . 12
3.1.1 General information . . . 12
3.1.2 Performance characteristics . . . 12
3.1.3 Accessories . . . 13
3.1.4 Device model with heating . . . 13
3.2 Connection technology . . . 13
3.2.1 MS 304 connection hood with M12 connectors . . . 14
3.2.2 MK 304 connection hood with spring-cage terminals . . . 14
3.3 Display elements . . . 15
3.3.1 LED indicators . . . 15
3.3.2 Display indicators . . . 17
3.4 Bar code tape . . . 18
3.4.1 General information . . . 18
3.4.2 Control bar codes . . . 20
3.4.3 Marker labels . . . 23
3.4.4 Twin tapes . . . 24

4 Functions . . . 25
4.1 Position measurement . . . 25
4.2 Speed measurement . . . 25
4.3 Timing . . . 26
4.4 Leuze webConfig tool . . . 26
4.5 Evaluation of the reading quality . . . 26
4.6 Distance measurement to the bar code tape . . . 27
4.7 Status query of position / speed measurement . . . 27

5 Applications . . . 28
5.1 High-bay storage device . . . 29
5.2 Telpher line . . . 30
5.3 Gantry cranes . . . 31

6 Mounting and installation . . . 32
6.1 Mounting bar code tape . . . 32
6.1.1 Installation and application remarks . . . 32
6.1.2 Cutting bar code tapes . . . 33
6.1.3 Mounting the BCB . . . 34
6.2 Bar code positioning system . . . 37
6.2.1 Mounting instructions . . . 38
6.2.2 Orientation of the BPS to the bar code tape . . . 39
6.2.3 Mounting with the BTU 0300M-W mounting device . . . 39
6.2.4 Mounting with the BT 300 W mounting bracket . . . 40
6.2.5 Mounting with BT 56 mounting device . . . 40
6.2.6 Mounting with BT 300-1 mounting device . . . 41

6.2.7 Mounting with M4 fastening screws . . . 41

7 Electrical connection . . . 42
7.1 External parameter memory in the connection hood . . . 42
7.2 MS 304 connection hood with connectors . . . 42
7.3 MK 304 connection hood with spring-cage terminals . . . 43
7.4 Pin assignment . . . 45
7.4.1 PWR / SW IN/OUT (Power and switching input/output) . . . 45
7.4.2 HOST / BUS IN (Host/Bus input, PROFIBUS) . . . 46
7.4.3 BUS OUT (bus output, PROFIBUS) . . . 47
7.4.4 Service USB . . . 48
7.5 PROFIBUS topology . . . 49
7.6 Cable lengths and shielding . . . 49

8 Basic configuration . . . 51
8.1 Configuring the PROFIBUS interface . . . 51
8.1.1 Communication profile . . . 51
8.1.2 Bus-access processes . . . 52
8.1.3 Device types . . . 52
8.1.4 Automatic baud rate detection . . . 52
8.2 Setting the PROFIBUS address . . . 53
8.3 Starting the device . . . 54
8.4 Configuring for the Siemens SIMATIC-S7 control . . . 54
8.5 PROFIBUS project modules . . . 55
8.5.1 Overview of the modules . . . 56
8.5.2 Device parameter module – Permanently defined parameters . . . 57
8.5.3 Module 1 – Position value . . . 57
8.5.4 Module 2 – Static preset . . . 58
8.5.5 Module 3 – Dynamic preset . . . 59
8.5.6 Module 4 – Input/output IO 1 . . . 60
8.5.7 Module 5 – Input/output IO 2 . . . 63
8.5.8 Module 6 – Status and control . . . 65
8.5.9 Module 7 – Position limit value range 1 . . . 67
8.5.10 Module 8 – Position limit value range 2 . . . 67
8.5.11 Module 9 – Error handling procedures . . . 68
8.5.12 Module 10 – Speed . . . 69
8.5.13 Module 11 – Static speed limit value 1 . . . 70
8.5.14 Module 12 – Static speed limit value 2 . . . 71
8.5.15 Module 13 – Static speed limit value 3 . . . 71
8.5.16 Module 14 – Static speed limit value 4 . . . 72
8.5.17 Module 15 – Dynamic speed limit value . . . 72
8.5.18 Module 16 – Speed status . . . 73
8.5.19 Module 20 – Free resolution . . . 74
8.5.20 Module 21 – distance to the bar code tape (BCB) . . . 75
8.5.21 Module 22 – Control and marker bar codes . . . 75
8.5.22 Module 23 – Tape value correction . . . 76
8.5.23 Module 24 – Reading quality . . . 76
8.5.24 Module 25 – Device status . . . 77
8.5.25 Module 26 – Extended status . . . 77
8.5.26 Module 28 - 16-bit position value . . . 78

9 Leuze electronic webConfig tool – Extended configuration . . . 79
9.1 Installing software . . . 79
9.1.1 System requirements . . . 79
9.1.2 Install USB driver . . . 80
9.2 Start webConfig tool . . . 80
9.3 Short description of the webConfig tool . . . 81

9.3.1 Overview . . . 81
9.3.2 *CONFIGURATION* function . . . 82
9.3.3 *ALIGNMENT* function . . . 85
9.3.4 *PROCESS* function . . . 86
9.3.5 *DIAGNOSTICS* function . . . 87
9.3.6 *MAINTENANCE* function . . . 87

10 Diagnostics and troubleshooting . . . 89
10.1 What to do in case of failure? . . . 89
10.1.1 Diagnostics with webConfig tool . . . 89
10.2 Operating indicators of the LEDs . . . 89
10.3 Error messages on the display . . . 90
10.4 Checklist for causes of errors . . . 90

11 Care, maintenance and disposal . . . 93
11.1 Cleaning . . . 93
11.2 Servicing . . . 93
11.2.1 Firmware update . . . 93
11.2.2 BCB repair with repair kit . . . 93
11.3 Disposing . . . 94

12 Service and support . . . 95
12.1 What to do should servicing be required? . . . 95

13 Technical data . . . 96
13.1 General specifications . . . 96
13.1.1 BPS without heating . . . 98
13.1.2 BPS with heating . . . 98
13.2 Bar code tape . . . 99
13.3 Dimensioned drawings . . . 101
13.4 Dimensioned drawings: Accessories . . . 103
13.5 Dimensioned drawing bar code tape . . . 106

14 Order guide and accessories . . . 107
14.1 BPS 304i type overview . . . 107
14.2 Connection hoods . . . 107
14.3 Accessory terminating resistor . . . 107
14.4 Cables accessories . . . 107
14.5 Other accessories . . . 108
14.6 Bar code tapes . . . 109

15 EC Declaration of Conformity . . . 112

16 Appendix . . . 113
16.1 BCB bar code tape with 40 mm grid . . . 113
16.2 Bar code tape BCB8 with 30 mm grid . . . 114

1 About this document

1.1 Used symbols and signal words

Table 1.1: Warning symbols and signal words

	Symbol indicating dangers to persons
	Symbol indicating dangers from harmful laser radiation
NOTE	Signal word for property damage Indicates dangers that may result in property damage if the measures for danger avoidance are not followed.

Table 1.2: Other symbols

	Symbol for tips Text passages with this symbol provide you with further information.
	Symbol for action steps Text passages with this symbol instruct you to perform actions.

Table 1.3: Terms and abbreviations

BCB	Bar code tape (general or specific BCB type with 40 mm grid)
BCB8	Bar code tape (BCB type with 30 mm grid)
BPS	Bar code Positioning System
CFR	Code of Federal Regulations
DAP	Device Access Point
DCP	Discovery and Configuration Protocol
EMC	Electromagnetic compatibility
EN	European standard
FE	Functional earth
GSD	General Station Description
GSDML	Generic Station Description Markup Language
GUI	Graphical User Interface
IO or I/O	Input/Output
I&M	Information & Maintenance
IP	Internet Protocol
LED	Light Emitting Diode
MAC	Media Access Control
MVS	Type of control bar code
MV0	Type of control bar code

NEC	National Electric Code
OSI	Open Systems Interconnection model
PELV	Protective Extra-Low Voltage
PNO	PROFIBUS Nutzerorganisation e.V. (PROFIBUS User Organization)
RT	Real Time
SNMP	Simple Network Management Protocol
PLC	Programmable Logic Control Programmable Logic Control
TCP	Transmission Control Protocol
UDP	User Datagram Protocol
USB	Universal Serial Bus
UL	Underwriters Laboratories
UV	Ultraviolet
XML	Extensible Markup Language

2 Safety

This sensor was developed, manufactured and tested in line with the applicable safety standards. It corresponds to the state of the art.

2.1 Intended use

The device is an optical measuring system which uses visible red laser light to determine its position relative to a permanently mounted bar code tape.

All accuracy details for the BPS 300 measurement system refer to the position relative to the permanently mounted bar code tape.

Areas of application

The BPS is designed for positioning in the following areas of application:

- Telpher line
- Travel and lifting axes of high-bay storage devices
- Repositioning units
- Gantry crane bridges and their trolleys
- Elevators

CAUTION

Observe intended use!

↳ Only operate the device in accordance with its intended use.

The protection of personnel and the device cannot be guaranteed if the device is operated in a manner not complying with its intended use.

Leuze electronic GmbH + Co. KG is not liable for damages caused by improper use.

↳ Read the operating instructions before commissioning the device.

Knowledge of the operating instructions is an element of proper use.

NOTICE

Comply with conditions and regulations!

↳ Observe the locally applicable legal regulations and the rules of the employer's liability insurance association.

2.2 Foreseeable misuse

Any use other than that defined under “Intended use” or which goes beyond that use is considered improper use.

In particular, use of the device is not permitted in the following cases:

- in rooms with explosive atmospheres
- for medical purposes
- as own safety component in accordance with the machinery directive

Use as safety-related component within the safety function is possible, if the component combination is designed correspondingly by the machine manufacturer.

NOTICE

Do not modify or otherwise interfere with the device!

↳ Do not carry out modifications or otherwise interfere with the device.

The device must not be tampered with and must not be changed in any way.

The device must not be opened. There are no user-serviceable parts inside.

Repairs must only be performed by Leuze electronic GmbH + Co. KG.

2.3 Competent persons

Connection, mounting, commissioning and adjustment of the device must only be carried out by competent persons.

Prerequisites for competent persons:

- They have a suitable technical education.
- They are familiar with the rules and regulations for occupational safety and safety at work.
- They are familiar with the original operating instructions of the device.
- They have been instructed by the responsible person on the mounting and operation of the device.

Certified electricians

Electrical work must be carried out by a certified electrician.

Due to their technical training, knowledge and experience as well as their familiarity with relevant standards and regulations, certified electricians are able to perform work on electrical systems and independently detect possible dangers.

In Germany, certified electricians must fulfill the requirements of accident-prevention regulations DGUV (German Social Accident Insurance) provision 3 (e.g. electrician foreman). In other countries, there are respective regulations that must be observed.

2.4 Exemption of liability

Leuze electronic GmbH + Co. KG is not liable in the following cases:

- The device is not being used properly.
- Reasonably foreseeable misuse is not taken into account.
- Mounting and electrical connection are not properly performed.
- Changes (e.g., constructional) are made to the device.

2.5 Laser warning notices

ATTENTION, LASER RADIATION – LASERCLASS2

Never look directly into the beam!

The device satisfies the requirements of IEC 60825-1:2007 (EN 60825-1:2007) safety regulations for a product of **laser class 2** as well as the U.S. 21 CFR 1040.10 regulations with deviations corresponding to “Laser Notice No. 50” from June 24, 2007.

- Never look directly into the laser beam or in the direction of reflected laser beams!

  If you look into the beam path over a longer time period, there is a risk of injury to the retina.
- Do not point the laser beam of the device at persons!
- Interrupt the laser beam using a non-transparent, non-reflective object if the laser beam is accidentally directed towards a person.
- When mounting and aligning the device, avoid reflections of the laser beam off reflective surfaces!
- CAUTION! The use of operating or adjusting devices other than those specified here or carrying out of differing procedures may lead to dangerous exposure to radiation.
- Observe the applicable statutory and local laser protection regulations.
- The device must not be tampered with and must not be changed in any way.

  There are no user-serviceable parts inside the device.

  Repairs must only be performed by Leuze electronic GmbH + Co. KG.

NOTICE
Affix laser information and warning signs! Laser information and warning signs attached to the device (see figure 2.1). Also included with the device are self-adhesive laser warning and laser information signs (stick-on labels) in multiple languages (see figure 2.2). ↳ Affix the laser information sheet to the device in the language appropriate for the place of use. When using the device in the U.S.A., use the stick-on label with the “Complies with 21 CFR 1040.10” notice. ↳ Affix the laser information and warning signs near the device if no signs are attached to the device (e.g. because the device is too small) or if the attached laser information and warning signs are concealed due to the installation position. Affix the laser information and warning signs so that they are legible without exposing the reader to the laser radiation of the device or other optical radiation.

1 Laser aperture
2 Laser warning sign
3 Laser information sign with laser parameters

Figure 2.1: Laser aperture, laser warning and information signs

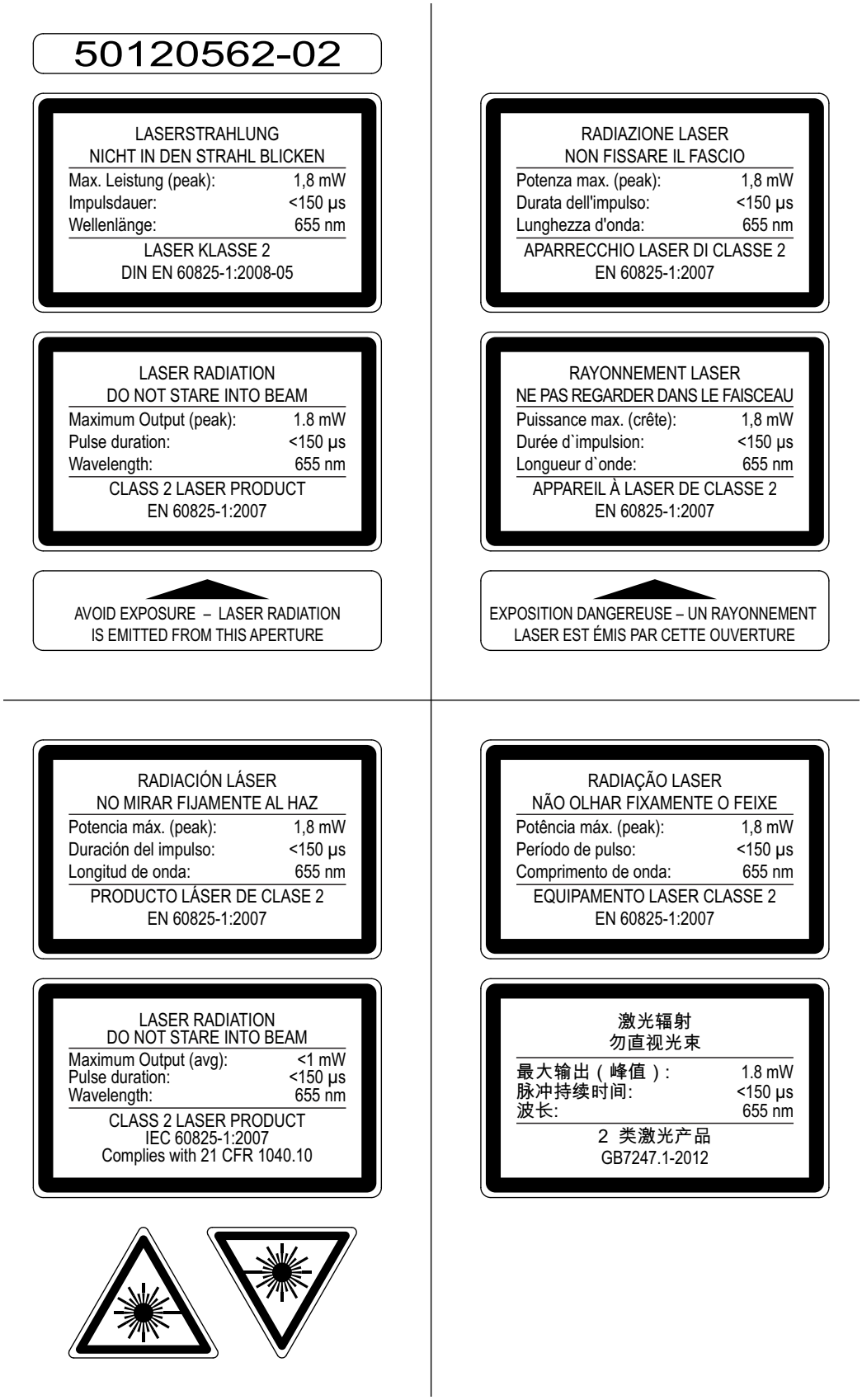

Figure 2.2: Laser warning and information signs – supplied stick-on labels

3 Device description

3.1 Device overview

3.1.1 General information

The BPS bar code positioning system uses visible red laser light to determine its position and its speed value relative to a bar code tape that is affixed along the travel path. This takes place in the following steps:

- Read a code on the bar code tape (see figure 3.1)
- Determine the position of the read code in the scanning beam
- Calculate the position to within less than a millimeter using the code information and the code position relative to the device's center.

The position and speed values are then output to the controller via the host interface.

The BPS consists of device housing and interface connection hood for the connection to the control. The BPS can optionally be delivered with display and optics heating.

The following connection hoods are available for the connection of the PROFIBUS interface:

- MS 304 connection hood with M12 connectors
- MK 304 connection hood with spring-cage terminals

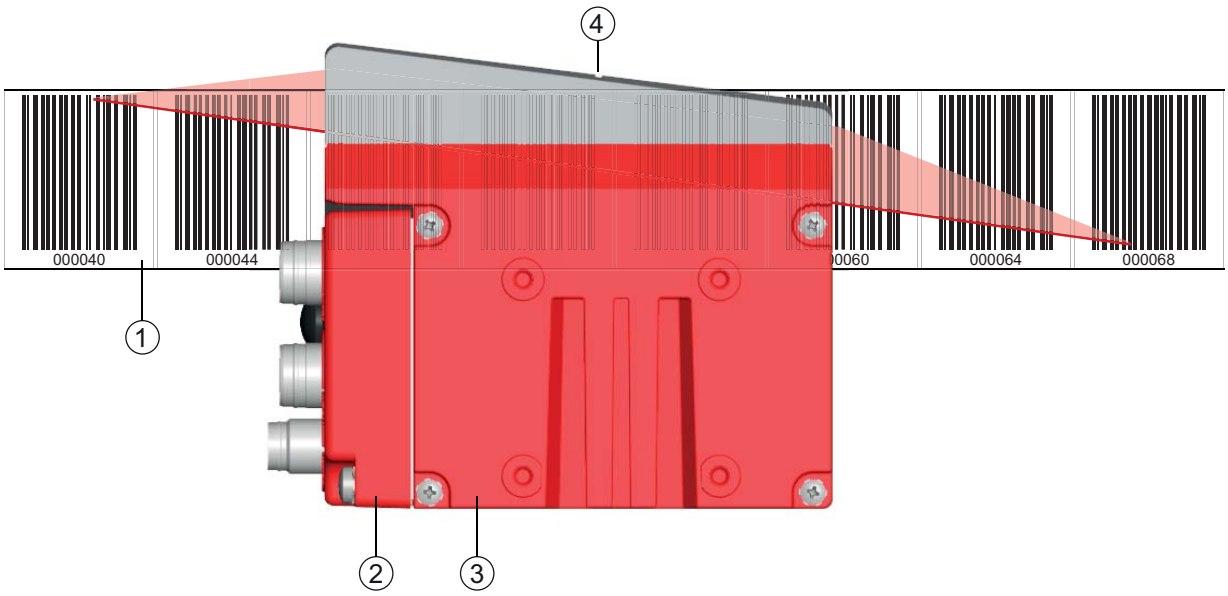

1 Bar code tape
2 Connection hood
3 Device housing
4 Middle of the scanning beam (device middle, output position value)

Figure 3.1: Device construction, device arrangement and beam exit

3.1.2 Performance characteristics

The most important performance characteristics of the bar code positioning system:

- Positioning with submillimeter accuracy from 0 to 10,000 m
- For the control at high traverse rates of up to 10 m/s
- Simultaneous position and speed measurement
- Working range: 50 to 170 mm; enables flexible mounting positions
- Interfaces: PROFINET fieldbus, PROFIBUS fieldbus, SSI, RS 232/RS 422, RS 485
- Binary inputs and outputs for control and process monitoring
- Configuration via webConfig tool or fieldbus
- Diagnostics via webConfig tool or optional display
- Optional model with display
- Optional model with heating for use to -35 °C

3.1.3 Accessories

Special accessories are available for the bar code positioning system. The accessories are optimally matched to the BPS:

- Highly flexible, scratch-, smudge- and UV-resistant bar code tape
- Mounting devices for precise mounting with one screw (easy-mount)
- Modular connection technology via connection hoods with M12 connectors or spring-cage terminals

3.1.4 Device model with heating

The bar code positioning system is optionally available as a model with integrated heating. In this case, heating is permanently installed ex works.

NOTICE
No self-installation of the heating!
↳ Self-installation of the heating on-site by the user is not possible.

The heating consists of two parts:

- Front cover heater
- Housing heater

Features of the integrated heating:

- Extends the application range of the BPS to -35 °C
- Supply voltage 18 … 30 VDC
- BPS release through an internal temperature switch (start-up delay of about 30 min for 24 V DC and minimum ambient temperature of -35 °C)
- Required conductor cross-section for the power supply: At least 0.75 mm2

NOTICE
Do not use ready-made cables!
↳ It is not possible to use ready-made cables. The current consumption of the BPS is too high for the ready-made cables.

Function

When the supply voltage is applied to the BPS, a temperature switch initially only supplies the heating with current (front cover heater and housing heater). During the heating phase (around 30 min), when the inside temperature rises above 15 °C, the temperature switch connects the BPS to the supply voltage. This is followed by the self test and the changeover to read operation. The PWR LED lights up, showing overall readiness for operation.

When the inside temperature reaches approx. 18 °C, another temperature switch turns the housing heater off and, if necessary, back on again (if the inside temperature drops below 15 °C). This does not interrupt the read operation.

The front cover heater remains activated until an inside temperature of 25 °C is reached. At temperatures above this, the front cover heater switches off and, with a switching hysteresis of 3 °C, back on again at an inside temperature below 22 °C.

3.2 Connection technology

For the electrical connection of the BPS, the following connection variants are available:

- MS 304 connection hood with M12 connectors
- MK 304 connection hood with spring-cage terminals

The voltage supply (18 … 30 VDC) is connected acc. to the connection type selected.

Two freely programmable switching inputs/switching outputs for individual adaptation to the respective application are also available here.

3.2.1 MS 304 connection hood with M12 connectors

The MS 304 connection hood features three M12 connector plugs and a Mini-B type USB socket as a service interface for configuration and diagnostics of the BPS.

Contained in the MS 304 are the address switches for setting the PROFIBUS address and the integrated parameter memory for easily exchanging the BPS. Both the settings as well as the PROFIBUS address are stored in the MS 304 and automatically transmitted to the device on every device start-up.

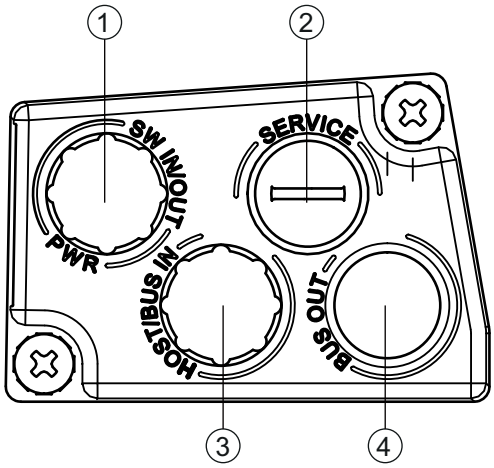

1 PWR / SW IN/OUT: M12 plug (A-coded)
2 SERVICE: Mini-B USB socket (behind protective cap)
3 HOST / BUS IN: M12 plug (B-coded), PROFIBUS 0
4 BUS OUT: M12 socket (B-coded), PROFIBUS 1

Figure 3.2: MS 304 connection hood, connections

NOTICE
Shielding connection
↳ The shielding connection is done via the M12 connector housing.

3.2.2 MK 304 connection hood with spring-cage terminals

The MK 304 connection hood makes it possible to connect the BPS directly and without additional connectors. The MK 304 features three cable bushings in which the shielding connection for the interface cable is also located. A Mini-B type USB socket is used for service purposes and for configuration and diagnostic of the BPS.

Contained in the MK 304 are the address switches for setting the PROFIBUS address and the integrated parameter memory for easily exchanging the BPS. Both the settings as well as the PROFIBUS address are stored in the MK 304 and automatically transmitted to the device on every device start-up.

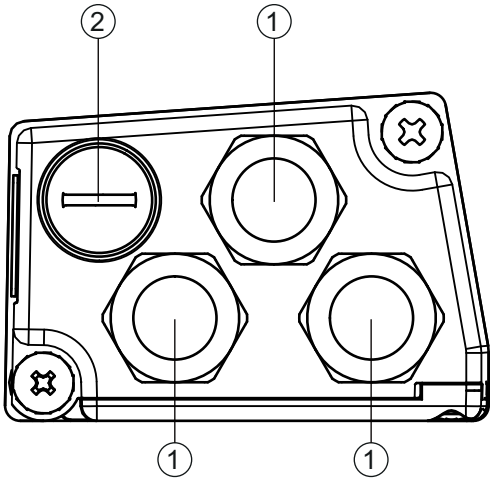

1 3x cable bushing, M16 x 1.5
2 SERVICE: Mini-B USB socket (behind protective cap)

Figure 3.3: Connection hood MK 304, connections

Cable fabrication and shielding connection

↳ Remove approx. 78 mm of the connection cable sheathing.

15 mm of sheath of the shielded line must be freely accessible.

↳ Lead the individual wires into the terminals according to the diagram.

NOTICE
Do not use wire-end sleeves!
↳ When fabricating cables, we recommend against using wire-end sleeves.

The shield is automatically contacted when the cable is lead into the metal screw fitting and fastened when the cord grip is closed.

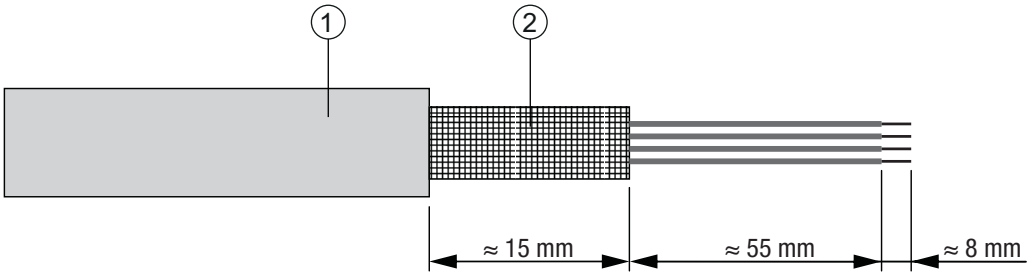

1 Diameter of contact area, cable: 6 … 9.5 mm
2 Diameter of contact area, shield: 5 … 9.5 mm

Figure 3.4: Cable fabrication for connection hoods with spring-cage terminals

3.3 Display elements

The BPS is available optionally with display, two control buttons and LEDs or with only two LEDs as indicators on the device housing.

3.3.1 LED indicators

The device housing features the following multicolor LED indicators as primary display element:

- PWR
- BUS

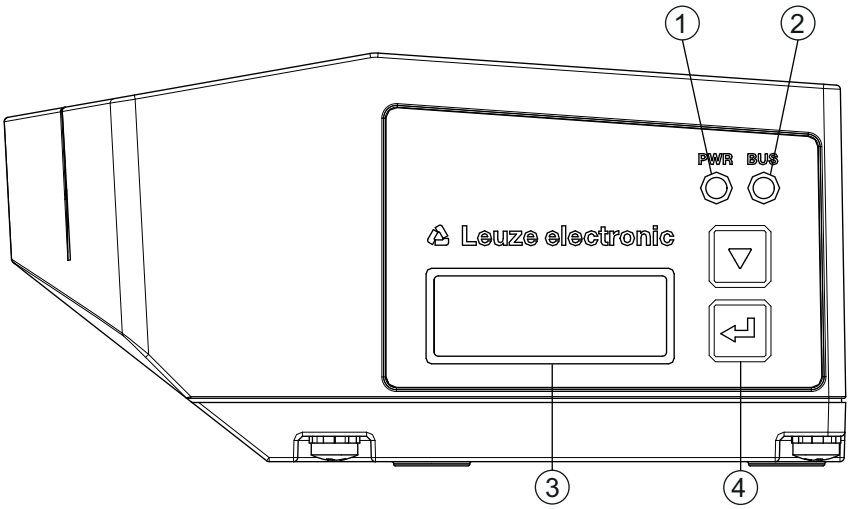

1 PWR LED
2 LED BUS
3 Display
4 Control buttons

Figure 3.5: Indicators on the device housing

Table 3.1: Meaning of the LED indicators on the device housing

LED	Color, state	Description
LED 1 PWR	Off	Device is switched off • No supply voltage
	Green, flashing	Device is being initialized • Supply voltage connected • Initialization running • No measurement value output
	Green, continuous light	Device in operation • Initialization finished • Measurement value output
	Red, flashing	Warning set • No measurement (e.g. no bar code tape)
	Red, continuous light	Device error • Device function is limited • Details via event log (see chapter 10.1.1 "Diagnostics with webConfig tool")
	Orange, continuous light	Service active • No data on the host interface • Configuration via USB service interface
LED 2 BUS	Off	No supply voltage
	Green, flashing	• Establishing communication to the master • Device waiting for communication to be re-established • No cyclical data exchange
	Green, continuous light	• Communication with master established • Cyclical data exchange active
	Red, flashing	• Parameterization or configuration failed • Communication error detected (DP Error) • No cyclical data exchange

3.3.2 Display indicators

The optional display of the BPS is only used as a display element. The display has the following features:

- Monochromatic with white background lighting
- Double line, 128 x 32 pixels
- Display language: English

Two control buttons can be used to control which values appear in the display.
The background lighting is activated by pressing any control button and is automatically deactivated after ten minutes have passed.

The display shows the content on two lines:

- The upper display line shows the selected function as an English term.
- The lower display line shows the data of the selected function.

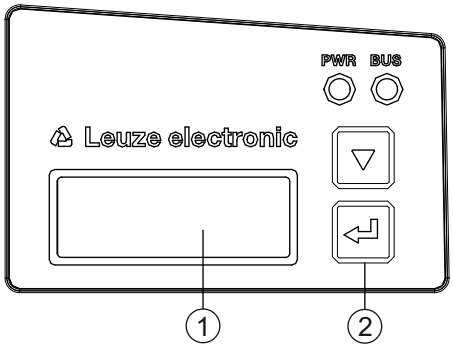

1 Display
2 Control buttons

Figure 3.6: Display on the device housing

Display functions

The following functions can be displayed and activated in the display:

- Position value
  - *Position Value*
  - Position value in mm
    Display with "." as decimal separator character (e.g., *+ 34598.7 mm*)
- Reading quality
  - *Quality*
  - 0 … 100%
- Device status
  - *BPS Info*
  - *System OK* | *Warning* | *Error*
- I/O status
  Status of the inputs/outputs
  - *I/O status*
  - *IO1 In:0* | *IO2 Out:0*
    In/Out depending on configuration, 0/1 for state of the I/O
- Device address for host communication
  - *BPS Address*
  - Decimal value of the PROFIBUS address, e.g. *126*
- Version information
  Software and hardware version of the device
  - *Version*
  - *SW: V1.3.0 HW:1*

NOTICE
Laser activation by selecting *Quality*!
↳ If measurement is stopped, the laser is activated by selecting *Quality*.

The display is controlled via the control buttons:

- ↵ – **Enter**: activate or deactivate the display shift function
- ▼ – **Down**: scroll through functions (downwards)

Example: Representation of the I/O status on the display

1. Press button ↵ : Display flashes
2. Press button ▼ : Display changes from position value (*Position Value*) to reading quality (*Quality*)
3. Press button ▼ : Display changes from reading quality (*Quality*) to device status (*BPS Info*)
4. Press button ▼ : Display changes from device status (*BPS Info*) to I/O status
5. Press button ↵ : I/O status displayed, display stops flashing

Display during device start-up

During device start-up, a start-up display first appears which is briefly followed by the display with the version information.

The standard display after starting up the BPS is *Position Value*.

3.4 Bar code tape

3.4.1 General information

The bar code tape is available in different variants:

- BCB bar code tape with 40 mm grid
  Code128 with character set C, increasing in increments of 4 (e.g., 000004, 000008, …)
- Bar code tape BCB8 with 30 mm grid
  Code128 with character set C, increasing in increments of 3 (e.g. 000003, 000006, …)

A bar code tape consists of a sequence of individual position labels in one of the two grids. Defined cut marks are provided for cutting the BCB.

The bar code tape is delivered on a roll. A roll contains up to 200 m of BCB, with the wrapping direction from the outside to the inside (smallest number on the outside). If more than 200 m of BCB is ordered, the total length is divided into rolls of 200 m.

Bar code tapes with special requirements with respect to height, length and value range can be ordered from **Leuze electronic** (see chapter 14.6 "Bar code tapes").

NOTICE
Value range for BCB with special requirements!
↳ When ordering bar code tapes with special requirements, make certain that the value range contains only values that are divisible by three (BCB8 with 30 mm grid) or four (BCB with 40 mm grid). It may otherwise not be possible to purchase and use repair tapes.

NOTICE
Only one BCB type per system!
↳ In a given system, use either only BCB8 with 30 mm grid or only BCB with 40 mm grid. If different BCB types are used in one system, the BPS cannot ensure an exact position determination.

NOTICE
Configure the BPS for the used BCB type!
↳ The used BCB type must be set in the BPS configuration with the *Tape selection* parameter; see chapter 8.5.2 "Device parameter module – Permanently defined parameters".
↳ On delivery, the BPS is set for BCB with a 40 mm grid.
If the BCB8 with a 30 mm grid is used, the *Tape selection* must be adjusted in the BPS configuration.
↳ If the used BCB type does not correspond to the *Tape selection* configured in the BPS, exact position determination cannot be performed by the BPS.

BCB bar code tape with 40 mm grid

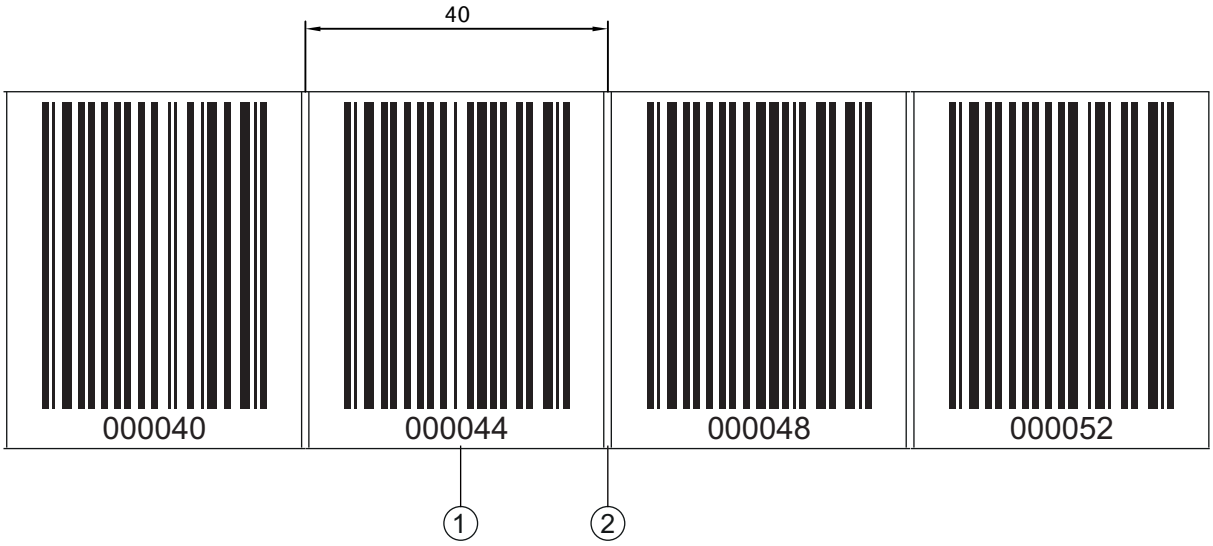

1 Position label with position value
2 Cut mark

Figure 3.7: Bar code tape with 40 mm grid

The standard height of 47 mm can be adapted. Other BCB height (25 mm) and special heights on request.

With a standard bar code tape and a repair tape with 40 mm grid, the printed numerical values are divisible by four without a remainder.

Bar code tape BCB8 with 30 mm grid

1 Position label with position value
2 Cut mark

Figure 3.8: Bar code tape with 30 mm grid

The standard height of 47 mm can be adapted. Other BCB heights (25 mm and 30 mm) and special heights on request.

With a standard bar code tape and repair tape with 30 mm grid, the printed numerical values are divisible by three without a remainder.

For bar code tapes with 30 mm grid, the designation *BCB8* is printed in plain text in addition to the position value.

3.4.2 Control bar codes

With the help of control bar codes that are affixed on top of the bar code tape at appropriate positions, functions in the BPS can be activated or deactivated, e.g., for changing various position values at switches. Code type Code128 with character set B is used for the control bar code.

The *MVS* label is a control bar code for the direction-independent switching of the position values from one bar code tape to another in the middle of the control bar code label.

- If, upon reaching the changeover position in the middle of the *MVS* label, the BPS does not detect the new BCB section in the scanning beam, the position value of the first BCB section is still output after the middle of the *MVS* label for half of the label width.

The *MV0* label is a control bar code for the deactivation of the position output.

- If the BPS detects the middle of the *MV0* label, no position values are output after the middle of the *MV0* label.

Arrangement of the control bar codes

The control bar code is attached in such a way that it replaces one position bar code or seamlessly connects two bar code tapes with different value ranges to one another (see figure 3.9).

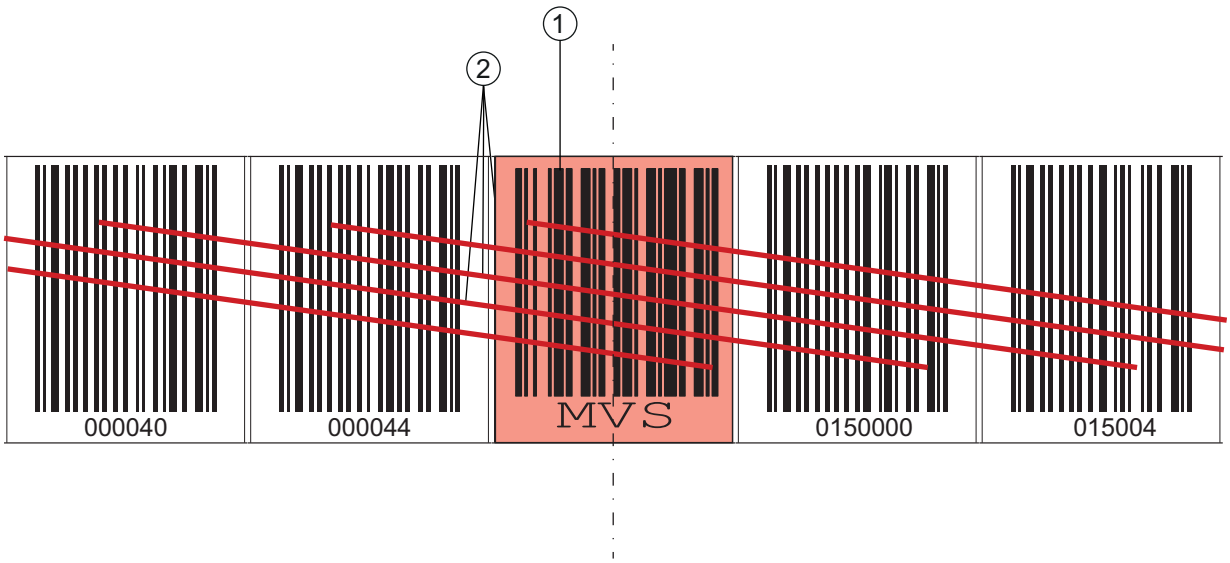

1 Control bar code
2 The control bar code is decoded in the marked scans

Figure 3.9: Arrangement of the MVS control bar code

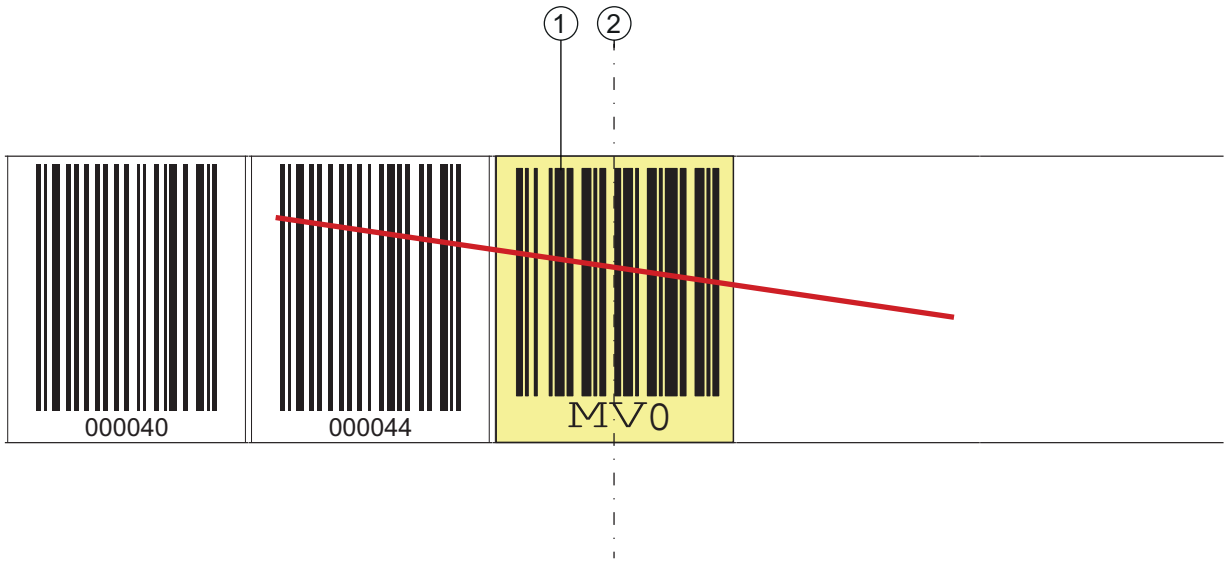

1 Control bar code
2 End of position determination from the middle of the control bar code

Figure 3.10: Arrangement of the MV0 control bar code

NOTICE
Distance between two control bar codes!
↳ Make certain that there is only one control bar code (or marker label) in the scanning beam at a time. The minimum distance between two control bar codes is determined by the distance between the BPS and bar code tape and the resulting length of the scanning beam.

The control bar codes are simply affixed over the existing bar code tape.
A control bar code should cover an entire position bar code and must have the correct grid dimension (see figure 3.11):

- 30 mm with BCB8 bar code tapes
- 40 mm with BCB bar code tapes

Keep the gap between the BCBs that are switched between as small as possible.

ПРОМЭЛЕКТРОНИКА / sales@prom-elec.com

1 Control bar code perfectly affixed on the bar code tape
2 Control bar code at small gap between two bar code tapes

Figure 3.11: Correct positioning of the control bar code

NOTICE
Gaps in bar code tape
↳ Avoid polished and high-gloss surfaces.
↳ Keep the gaps between the two bar code tapes and the control bar code as small as possible.

Measurement value switching between two bar code tapes with different value ranges

The *MVS* or *MV0* control bar code is used to switch between two bar code tapes.

NOTICE
1 m minimum distance of the bar code values for measurement value switching!
↳ For different BCB value ranges, make certain that the minimum distance of 1 m between the preceding position bar code (before the control bar code) and the subsequent position bar code (after the control bar code) is maintained. Example (BCB with 40 mm grid): If the last position bar code on the BCB before the control bar code is *75120*, the following position bar code on the BCB after the control bar code must be at least *75220*. If the minimum distance between the bar code values is not maintained, position determination may be faulty.

- The end of the preceding bar code tape and the start of the subsequent bar code tape can end and begin, respectively, with completely different position bar codes.
- BCB changeover by means of a control bar code always occurs at the same position, i.e., it serves to change from the preceding tape to the subsequent tape and vice versa.
- If the center of the BPS reaches the transition point of the control bar code, the device switches to the second BCB, provided the next position label is in the BPS's scanning beam (see figure 3.12). The output position value is thereby always uniquely assigned to one BCB.

If the BPS does not detect the new BCB section upon reaching the changeover position, the position-value output is dependent on the used control bar code.

MVS control bar code: The position value of the first BCB is output beyond the middle of the *MVS* label for half of the label width.

MV0 control bar code: No position values are output after the middle of the *MV0* label.

- When the control label is passed, the new BCB value is output relative to the middle of the device or label.

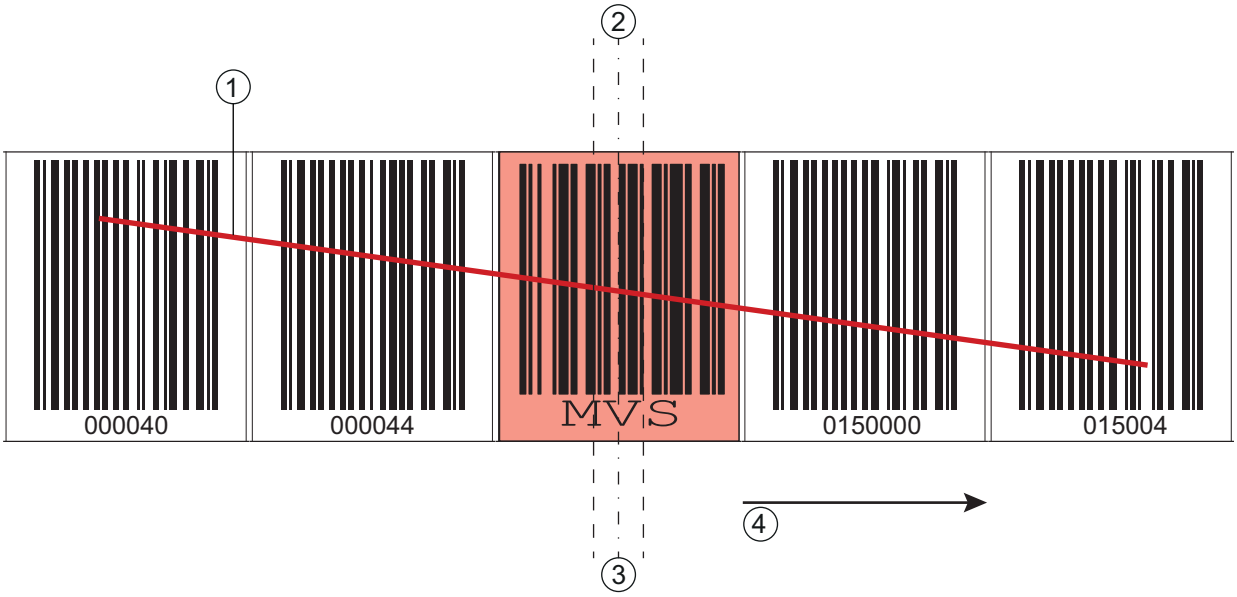

1 Scanning beam
2 Middle of the control bar code
3 Middle of the BPS
4 Direction of movement

Figure 3.12: Changeover position with *MVS* control bar code for BCB changeover

3.4.3 Marker labels

Marker labels, which are affixed at the appropriate locations on top of the bar code tape, can be used to trigger various functions in the superior control. The BPS detects the defined marker labels in the scanning beam, decodes them, and makes them available to the control.

NOTICE
Distance between two marker labels!
↳ Make certain that there is only one marker label (or control bar code) in the scanning beam at a time.
The minimum distance between two marker labels is determined by the distance between the BPS and bar code tape and the resulting length of the scanning beam.

Definition of the marker label

The following combinations of letters and numbers may be used as marker labels:

First character: A … Z, a … z

Second character: Digit from 0 … 9

Third character: Digit from 0 … 9

Structure of the marker labels

Code type Code128 with character set B is used for the marker labels.

Arrangement when using the marker label with positioning

The marker label must be attached to the bar code tape aligned with the grid of the actual coding. A position code should be visible before and after the marker label.

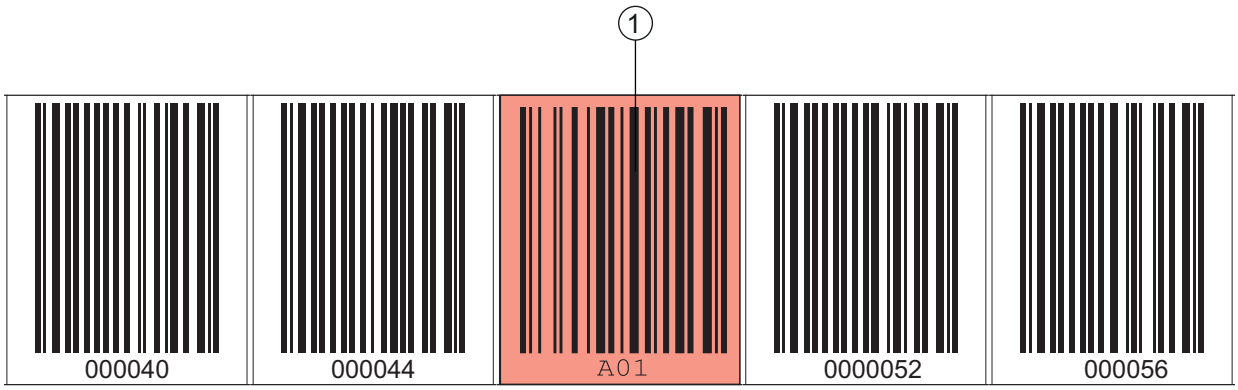

1 Marker label

Figure 3.13: System arrangement of marker labels

Arrangement when using the marker label without positioning

The marker label must be positioned within the BPS's detection range.

3.4.4 Twin tapes

Twin tapes are jointly manufactured bar code tapes with the same value range.

NOTICE
A twin tape always consists of two bar code tapes!
↳ When ordering a twin tape, two bar code tapes are always included with an order.

Twin tapes are used if positioning with two bar code tapes is necessary, e.g., with crane systems or elevators.

Because they are manufactured jointly, both tapes have the same length tolerance. As a result, differences in length and code position are minimal. By having the same code position on both tapes, improved synchronization can be achieved during positioning compared to bar code tapes that are manufactured separately.

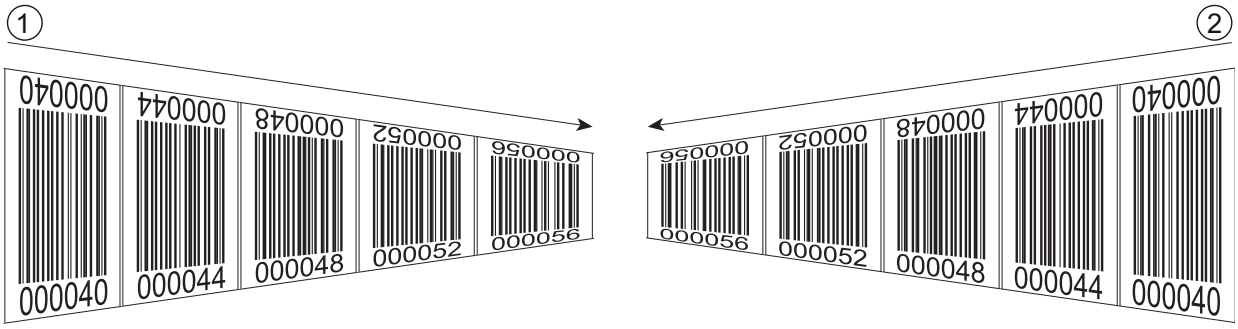

1 Twin bar code tape 1
2 Twin bar code tape 2

Figure 3.14: Twin tape with double numbering

Twin tapes are always delivered in pairs on two rolls.

If twin tapes are replaced, both tapes are to be replaced.

Twin tapes can be ordered from **Leuze electronic** (see chapter 14.6 "Bar code tapes").

4 Functions

This chapter describes the functions of the BPS and the parameters for adaptation to the respective application conditions and requirements.

Main functions:

- Position measurement
- Speed measurement

The following parameters are relevant for the timing of the position and speed measurement:

- Measurement value preparation
  Configurable response time
- Measurement error tolerance
  Configurable time-based error suppression

4.1 Position measurement

The output value of the position measurement is calculated from the measurement and the settings for resolution, preset, offset, etc.
The most important individual parameters for the position measurement are:

Parameter	Description	Range/Values
Position resolution	The parameter specifies the resolution of the position value. It acts only on the host interface. The resolution has no effect on the set parameter values such as offset or preset.	0.001 mm 0.01 mm 0.1 mm 1 mm 10 mm or Free resolution
Unit	The parameter specifies the measurement unit of the measured position and speed. The selection of the measurement unit affects all parameters with measurement units.	Metric (mm) or inch (1/100 in)
Offset	The offset is used to correct the position value by a fixed amount. If the offset is activated, the offset is added to the position value. This yields a new output value: Output value = position value + offset	1 mm or inch/100
Preset	Like the offset, the preset is used to correct the position value. With preset, a preset value is specified. The value is accepted during a corresponding event (switching input or fieldbus). If the preset is activated, this has priority over the offset.	1 mm or inch/100

4.2 Speed measurement

The current speed is ascertained and output on the basis of the respective position values.
The most important individual parameters for the speed measurement are:

Parameter	Description	Range/Values
Speed resolution	The parameter defines the resolution of the speed value. It affects only the fieldbus output.	1 mm/s 10 mm/s 100 mm/s 1000 mm/s or Free resolution
Averaging	The parameter specifies the averaging time of the calculated speed values in steps.	Steps: 2 ms, 4 ms, 8 ms, 16 ms, 32 ms, 64 ms, 128 ms

4.3 Timing

The BPS of the 300i series operate with a scanning rate of 1000 scans per second. A measurement value is ascertained every 1 ms.

The following parameters are relevant for the timing of the position and speed measurement:

Parameter	Description	Range/Values
Integration depth	The integration depth affects the measurement of position and speed. The *integration depth* parameter specifies the number of sequential measurements that the BPS uses for position determination. The integration results in smoothing of the output measurement value. An *integration depth* of 8 (position determination with 8 measurement values) results in a response time of 8 ms.	Factory setting: 8
Error delay time	Errors that occur are suppressed for the configured time. If no valid position or speed value can be ascertained in the configured *error delay time*, the last valid value is always output. If the error persists after the *error delay time* elapses, the value of the *Position/Speed value in case of error* parameter is then output (standard).	Factory setting: 50 ms

4.4 Leuze webConfig tool

The webConfig configuration tool offers a graphical user interface for the display of process data, configuration and diagnostics of the BPS via a PC; see chapter 9 "Leuze electronic webConfig tool – Extended configuration".

4.5 Evaluation of the reading quality

The BPS can signal the reading quality of the BPS. The reading quality is displayed in % values.

The parameters for the evaluation of the reading quality are set in the interface-specific configuration; see chapter 8.5.23 "Module 24 – Reading quality".

The values of the reading quality are displayed via the optional display (*Quality*), the serial communication protocol and via the webConfig tool; see chapter 9.3.3 "ALIGNMENT function".

The evaluation of the reading quality provides the following information, e.g.:

- The reading quality is constantly bad: Soiling of the BPS optics
- The reading quality is always bad at certain position values: Soiling of the BCB

4.6 Distance measurement to the bar code tape

Within the reading field, the BPS can output the current distance from the read head to the BCB. The distance from the position label closest to the reference point is output.

see chapter 8.5.20 "Module 21 – distance to the bar code tape (BCB)"

The distance measurement value is output via:

- The *ALIGNMENT* function (*Quality* menu) in the webConfig tool (see chapter 9.3.3); this function is only available in the *Service* operating mode.
- The host interface (input data)

4.7 Status query of position / speed measurement

The following status information can be transmitted to the PROFINET master:

Module 6 (see chapter 8.5.8) and module 16 (see chapter 8.5.18) in the PROFIBUS configuration signal status information of the position/speed measurement.

The following status information can be transmitted to the PROFIBUS master:

- Status information for position measurement: Input data 0.0 … 1.7; see chapter 8.5.8 "Module 6 – Status and control"
- Status information for speed measurement: Input data 0.0 … 1.5; see chapter 8.5.18 "Module 16 – Speed status"

5 Applications

Wherever systems are moved automatically, it is necessary to uniquely determine their respective positions. In addition to mechanical measuring sensors, optical methods are particularly well suited for position determination as they can be used to determine position without mechanical wear and slippage.

Compared to common optical measurement techniques, the Leuze electronic Bar code Positioning System (BPS) is able to measure a position with absolute sub-millimeter accuracy, i.e. independent of reference points. As a result, it is able to provide a unique position value at any time. With the highly flexible and hard-wearing Bar Code Tape (BCB), the system can even be used without problem in systems with curves or guide tolerances. And this at lengths of up to 10,000 meters.

The product family of Leuze electronic bar code positioning systems convinces with a variety of advantages:

- The laser simultaneously scans three bar codes and, as a result, is able to determine the position with sub-millimeter accuracy. The wide reading field makes accurate position determination possible even in the event of minor damage to the tape.
- With the systems' flexible depth of field, it is also possible to bridge over mechanical deviations.
- Due to the large reading distance combined with the great depth of field, a large opening angle and a very compact construction, the device is ideally suited for the conveyor and storage technology market.
- The BPS devices are capable of simultaneously measuring position and speed and are thus also suitable for control tasks in your automation applications.
- Using a mounting device, the BPS can be mounted with millimeter accuracy with just one screw. If mounted using a mounting device, a new device is automatically aligned correctly should it be necessary to exchange a device (easy-mount).
- The unique labeling of the bar code tape allows the system to be put back into operation without problem even after a brief voltage drop without, e.g., needing to utilize a reference point.
- The Leuze electronic bar code tape is very robust, highly flexible and, thanks to the self-adhesive back, can be easily integrated into your overall mechanical system. It can be fit optimally to both vertical as well as horizontal curved paths and thereby reliably facilitates trouble-free and reproducible measurement at any point in your system with sub-millimeter accuracy.

Typical applications for the BPS include:

- High-bay storage device (see chapter 5.1)
- Telpher line (see chapter 5.2)
- Gantry cranes (see chapter 5.3)

5.1 High-bay storage device

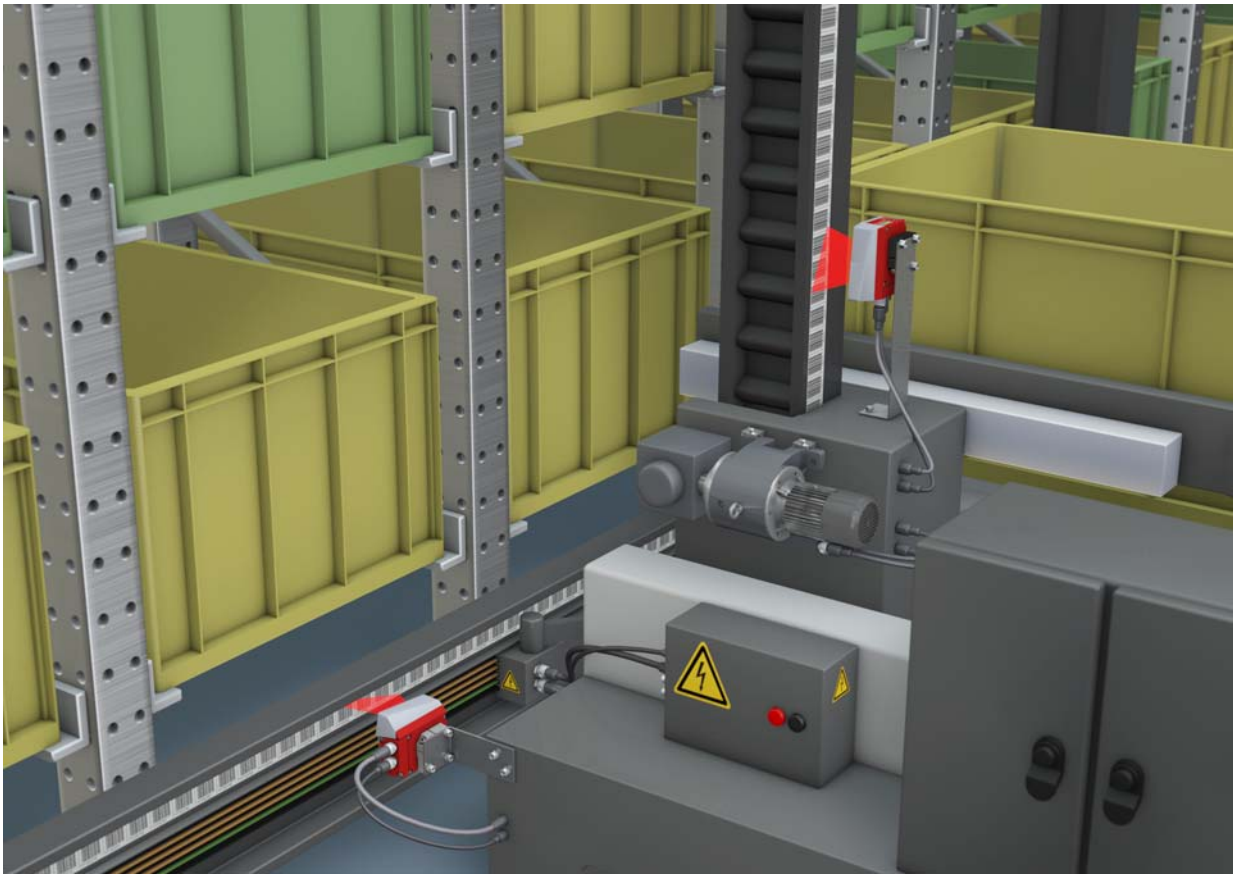

Figure 5.1: High-bay storage device

- Simultaneous position and speed measurement for regulation tasks
- Precise positioning with a reproducibility of ± 0.15 mm
- Control at high traverse rates of up to 10 m/s

5.2 Telpher line

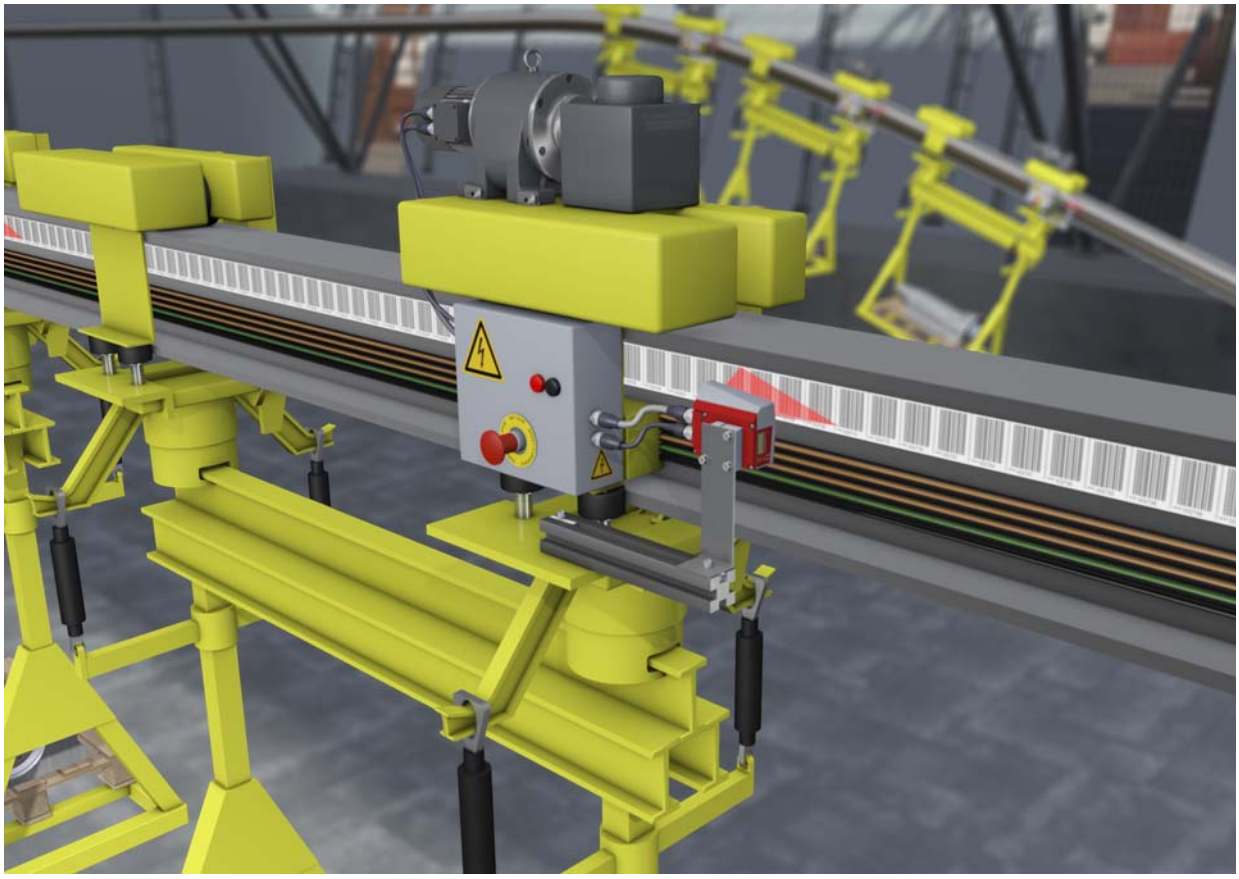

Figure 5.2: Telpher line

- The working range from 50 - 170 mm allows for flexible mounting positions and reliable position detection at varying distances
- Control codes for changing to different position values at switches

5.3 Gantry cranes

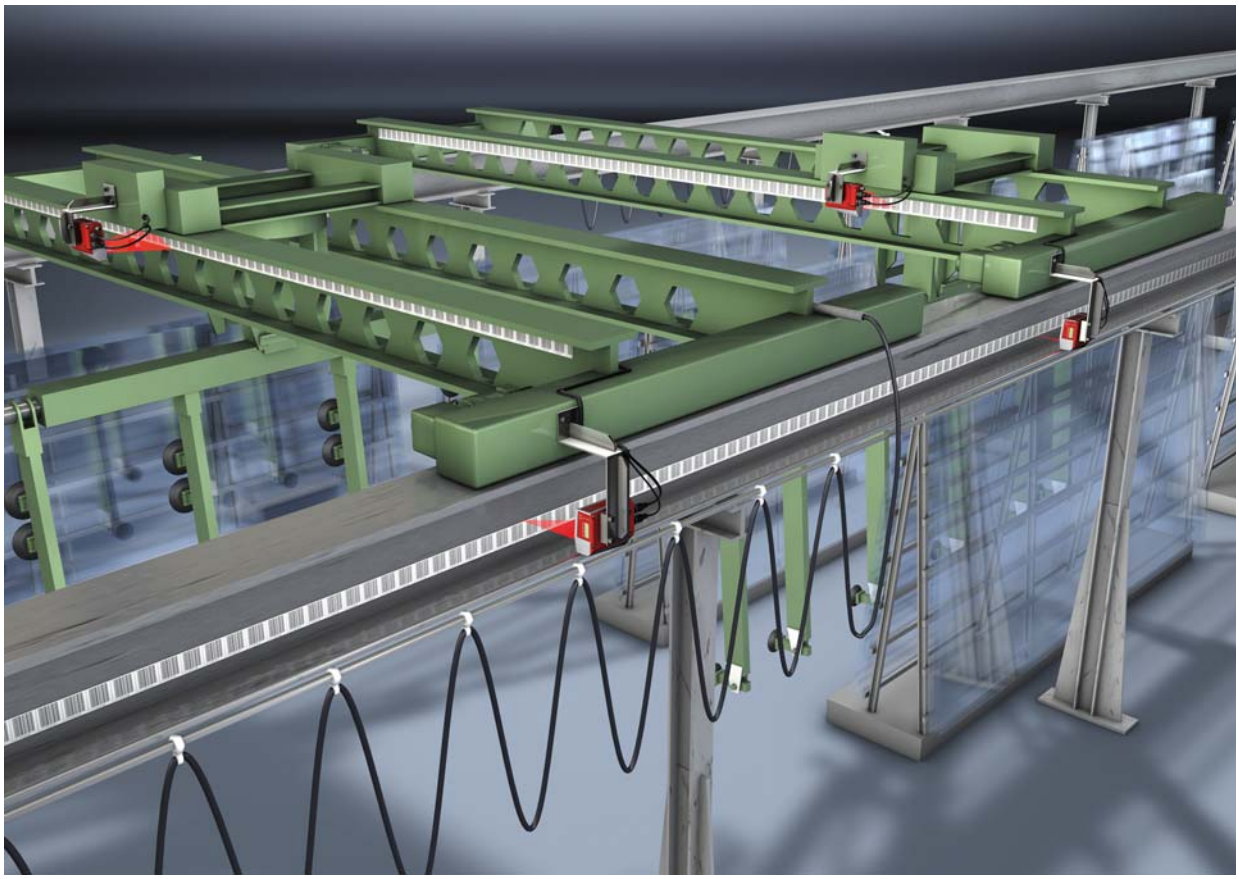

Figure 5.3: Gantry cranes

- Positioning from 0 to 10,000 meters
- Scratch- and smudge-proof, UV-resistant bar code tapes
- Synchronous positioning with twin tapes on both rails
- Mounting device for fast, precise mounting with one screw

6 Mounting and installation

6.1 Mounting bar code tape

6.1.1 Installation and application remarks

NOTICE

BCB mounting

- When processing BCBs, observe the specified processing temperatures.

  When processing BCBs in cold storage facilities, the BCB must be affixed before cooling the storage facility.

  However, if it should be necessary to affix the BCB at temperatures outside of the specified processing temperature, assure that the bonding surface as well as the BCB are at the processing temperature.
- Avoid dirt deposits on the BCB.

  If possible, affix the BCB vertically.

  If possible, affix the BCB below an overhead covering.

  The BCB must never be continuously cleaned by on-board cleaning devices such as brushes or sponges. Permanent on-board cleaning devices polish the BCB and give it a glossy finish. The reading quality deteriorates as a result.
- After affixing the BCBs, make certain that there are no polished, high-gloss surfaces in the scanning beam (e.g., glossy metal at gaps between the individual BCBs), as the measurement quality of the BPS may be impaired.

  Affix the BCBs to a diffusely reflective support, e.g., a painted surface.
- Avoid sources of extraneous light and reflections on the BCB.

  Ensure that neither strong sources of extraneous light nor reflections of the support on which the BCB is affixed occur in the vicinity of the BPS scanning beam.
- Affix the BCB over expansion joints up to a width of several millimeters.

  The BCB must not be interrupted at this location.
- Cover protruding screw heads with the BCB.
- Ensure that the BCB is affixed without tension.

  The BCB is a plastic tape that can be stretched by strong mechanical tension. Excessive mechanical stretching results in lengthening of the tape and distortion of the position values.

NOTICE

BCB application

- Make certain that the BCB is located in the scanning beam of the BPS over the entire traversing path.

  The BPS can determine the position on BCBs with arbitrary orientation.
- Bar code tapes with different value ranges may not directly follow one another.

  In the case of different value ranges, a gap of at least 1 m must be maintained between the last position bar code of the preceding BCB and the first position bar code of the subsequent BCB (see chapter 3.4.2).
- For *MVS*/*MV0* control bar codes (see chapter 3.4.2), the minimum distance of 1 m between the last position bar code before the control bar code and the first position bar code after the control bar code must be maintained.
- For bar code tapes with different value ranges, both BCBs must correspond to the BCB type configured in the BPS (see chapter 3.4.1).
- Avoid position bar code labels with the value *00000*.

  Measurements to the left of the center of a *00000* label produce negative position values that may not be displayed correctly.

6.1.2 Cutting bar code tapes

NOTICE
Avoid cutting BCB!
↳ If possible, avoid cutting bar code tapes.
Optimum position value determination by the BPS is achieved with continuously affixed BCB.
↳ If there are mechanical gaps, first affix the BCB continuously. Then cut the BCB.

The BCB is cut at the indicated cut marks; see figure 6.1.

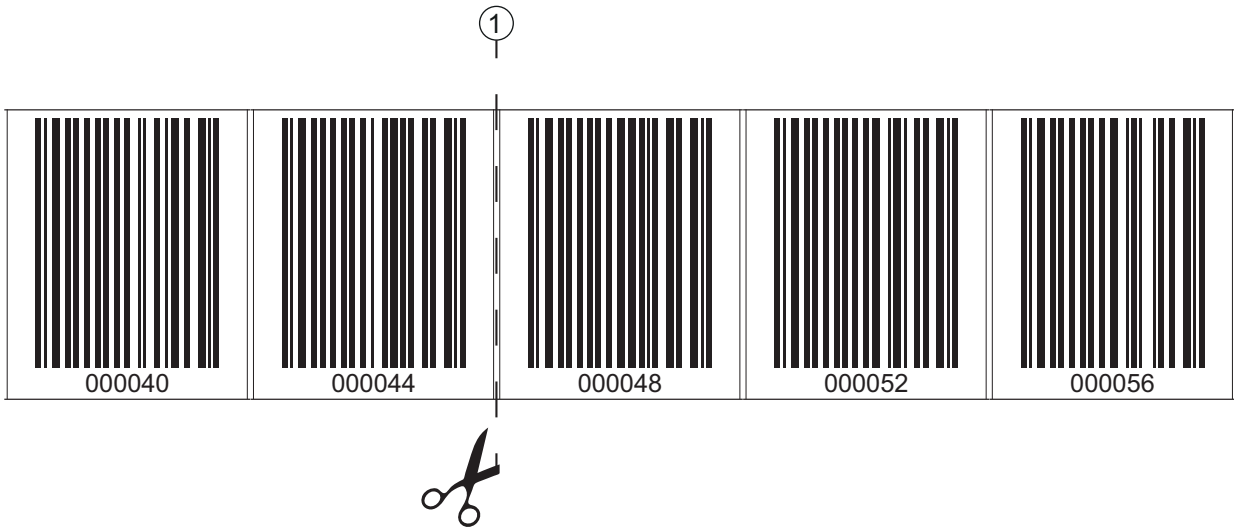

1 Cut mark

Figure 6.1: Cut mark on the bar code tape

If another BCB is to be affixed directly after the preceding BCB, the subsequent bar code value must differ from the preceding BCB by at least 1 m; see figure 6.2.

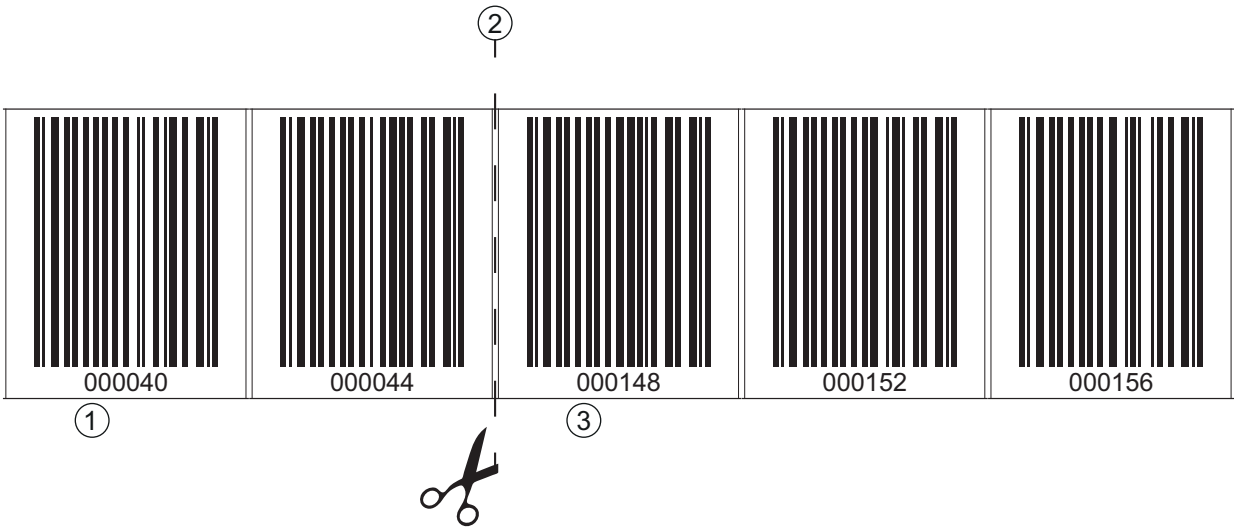

1 Preceding bar code tape
2 Cut mark
3 Subsequent bar code tape, value range + 1 m

Figure 6.2: Cut bar code tape

If there is a gap without tape after the preceding BCB, it must be at least 300 mm wide before the subsequent BCB is affixed; see figure 6.3. The first bar code value of the subsequent BCB must differ by at least 20 (200 mm) from the last bar code value of the preceding BCB.

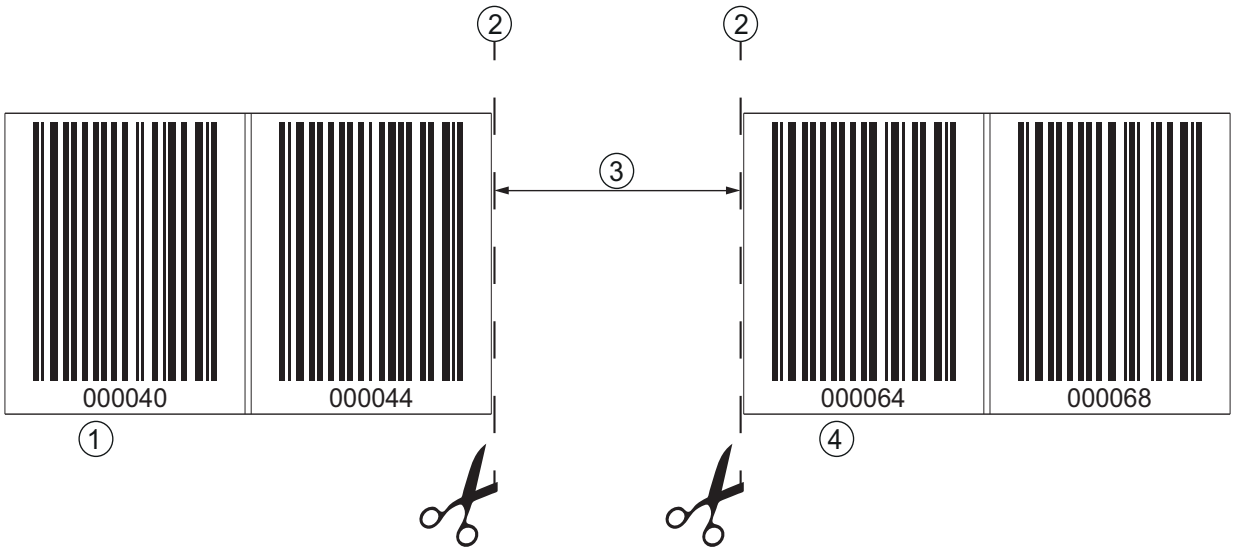

1 Preceding bar code tape
2 Cut mark
3 Gap, at least 300 mm
4 Subsequent bar code tape

Figure 6.3: Gap in cut bar code tape to avoid double positions

NOTICE
No glossy gaps in the cut bar code tape!
↳ Ensure that there are matt, bright surfaces behind the gaps in the BCB.
Polished, reflective, and high-gloss surfaces in the scanning beam may impair the measurement quality of the BPS.

6.1.3 Mounting the BCB

Mount the BCB as follows:

↳ Check the surface.

It must be flat, free of grease and dust, and be dry.

↳ Define a reference edge (e.g., metal edge of the busbar).

↳ Remove the backing and affix the BCB along the reference edge tension free.

↳ Secure the bar code tape to the mounting surface by pressing down with the palm of your hand.

When affixing, make certain that the BCB is free of folds and creases and that no air pockets form.

NOTICE
When mounting, do not pull on the BCB!
↳ The BCB is a plastic tape that can be stretched by strong mechanical tension. The stretching results in lengthening of the tape and distortion of the position values on the BCB.
While the BPS can still perform the position calculation in the event of distortions, the absolute measurement accuracy is no longer ensured in this case. If the values are taught using a teach-in process, stretching of the BCB is irrelevant.

If a bar code tape was damaged, e.g., by falling parts, you can download a repair kit for the BCB from the Internet (see chapter 11.2.2 "BCB repair with repair kit").

Use the bar code tape created with the repair kit only temporarily as an emergency solution.

BCB mounting in horizontal curves

NOTICE
Limited absolute measurement accuracy and reproducibility!
↳ BCB mounting in curves decreases the absolute measurement accuracy of the BPS, since the distance between two bar codes is no longer exactly 40 mm or 30 mm.

↳ For horizontal curves, maintain a minimum bending radius of 300 mm (see figure 6.4).

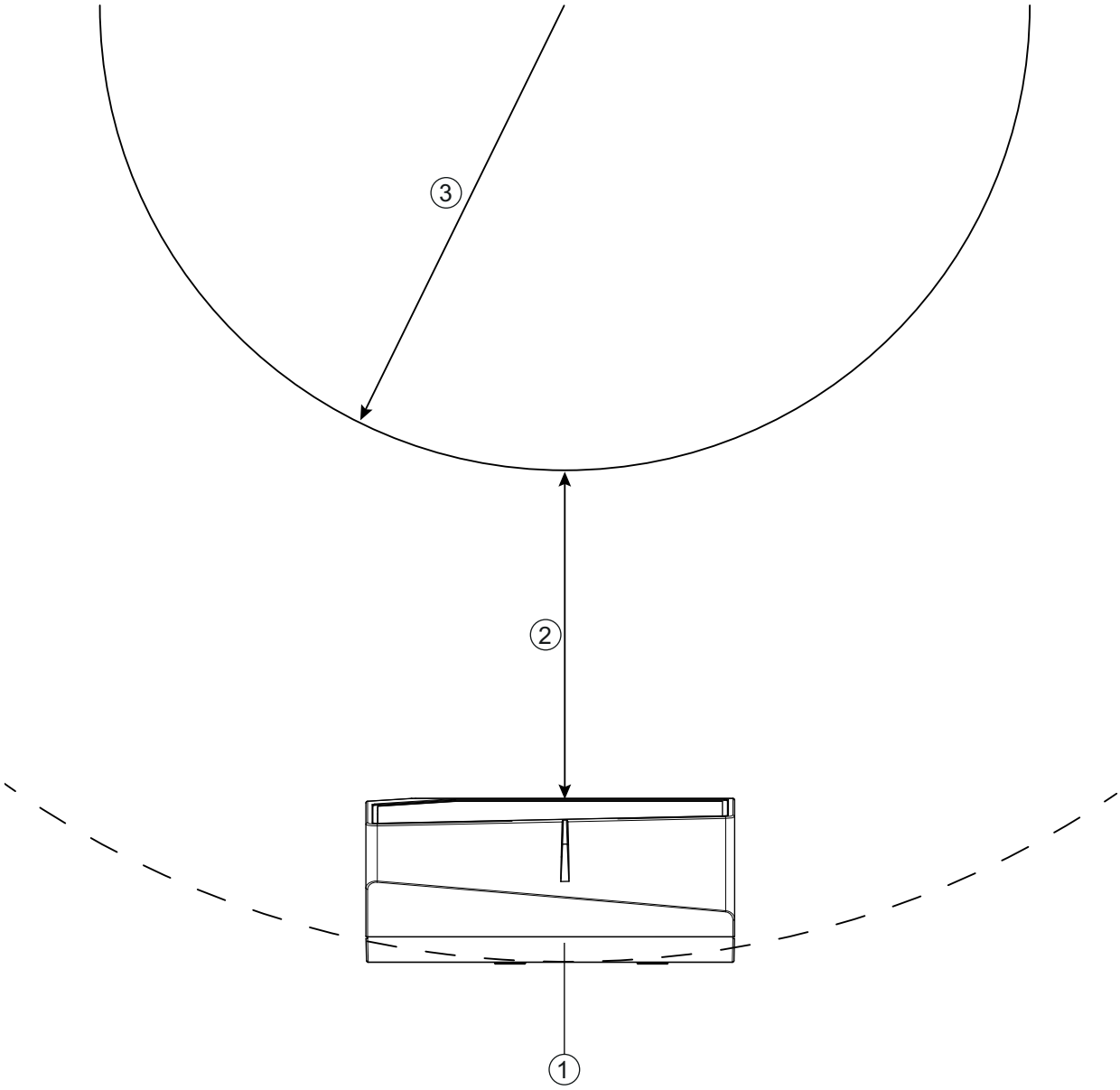

1 BPS
2 Reading distance
3 Radius of the bar code tape, R_{min} = 300 mm

Figure 6.4: Mounting the bar code tape for use in horizontal curves

BCB mounting in vertical curves

NOTICE
Limited absolute measurement accuracy and reproducibility!
↳ BCB mounting in curves decreases the absolute measurement accuracy of the BPS, since the distance between two bar codes is no longer exactly 40 mm or 30 mm.
↳ In areas where the BCB is fanned out around curves, limitations of the reproducibility must be expected.

- Only partially cut the BCB at the cut mark.
- Affix the BCB along the curve like a fan (see figure 6.5).
- Ensure that the BCB is affixed without mechanical tension.

NOTICE
No glossy gaps in the bar code tape!
Ensure that there are matt, bright surfaces behind the fanning in the BCB curves.
Polished, reflective, and high-gloss surfaces in the scanning beam may impair the measurement quality of the BPS.

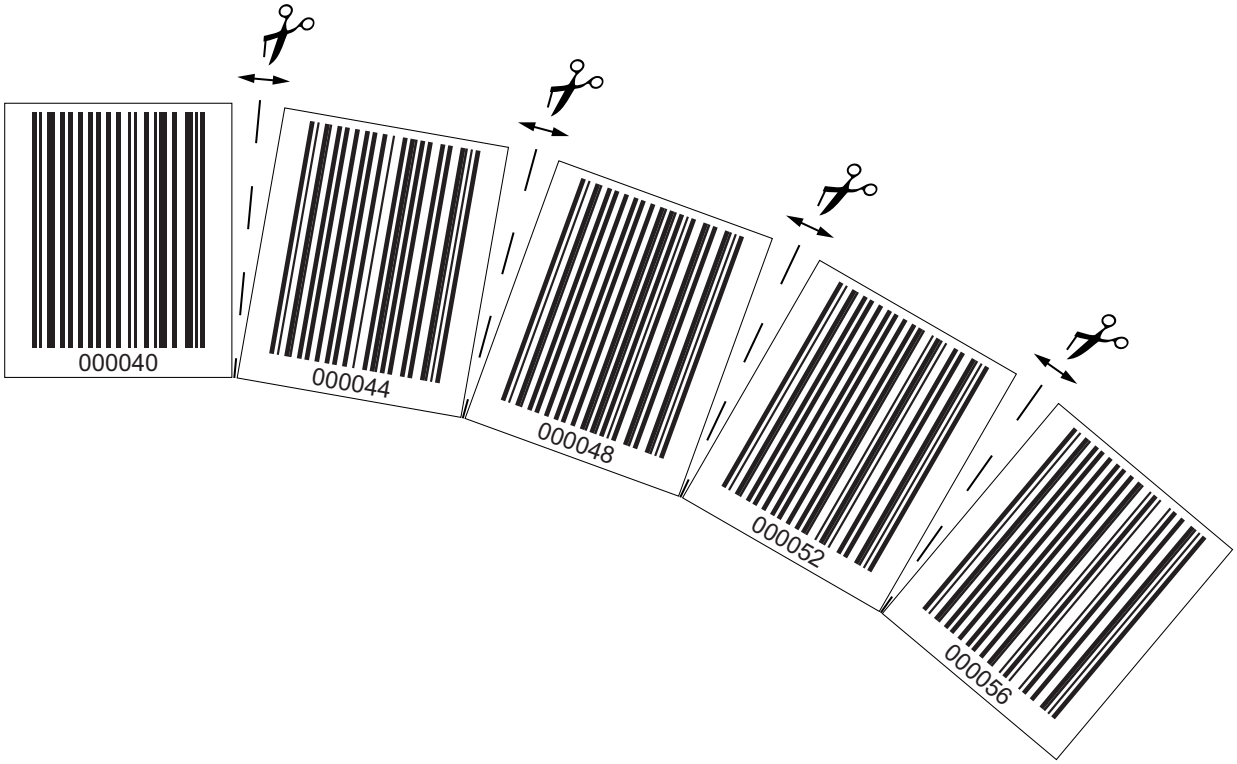

Figure 6.5: Preparing the bar code tape for use in vertical curves

Mounting twin tapes

If two bar code tapes with the same value range are used for positioning, e.g., for crane systems or elevators, the use of twin tapes is recommended (see chapter 3.4.4 "Twin tapes").

“Upside down” in order to have the same values at the same position (see figure 6.6).

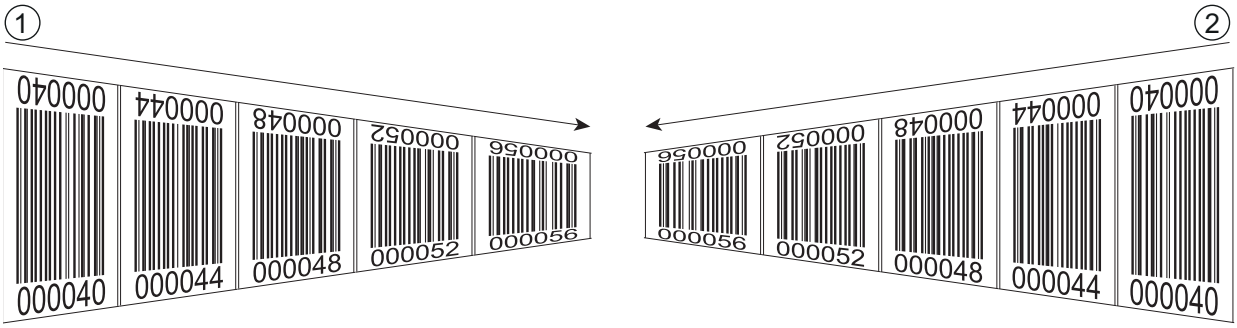

1 Twin bar code tape 1
2 Twin bar code tape 2

Figure 6.6: Mounting twin tapes

NOTICE
A twin tape always consists of two bar code tapes.
↳ When ordering twin tapes, two bar code tapes are always included with an order.
↳ Ensure that the BCB is affixed without tension.
The BCB is a plastic tape that can be stretched by strong mechanical tension. Excessive mechanical stretching results in lengthening of the tape and distortion of the position values.

Mounting two bar code tapes with the same value range

For crane systems or elevators, two bar code tapes with the same value range are used for positioning.

If two bar code tapes with the same value range are needed, the use of twin tapes is recommended (see chapter 3.4.4 "Twin tapes").

If a twin tape is not used: To have the same values at the same position, one bar code tape must be affixed with numbers upside down while the other is affixed normally (see figure 6.7).

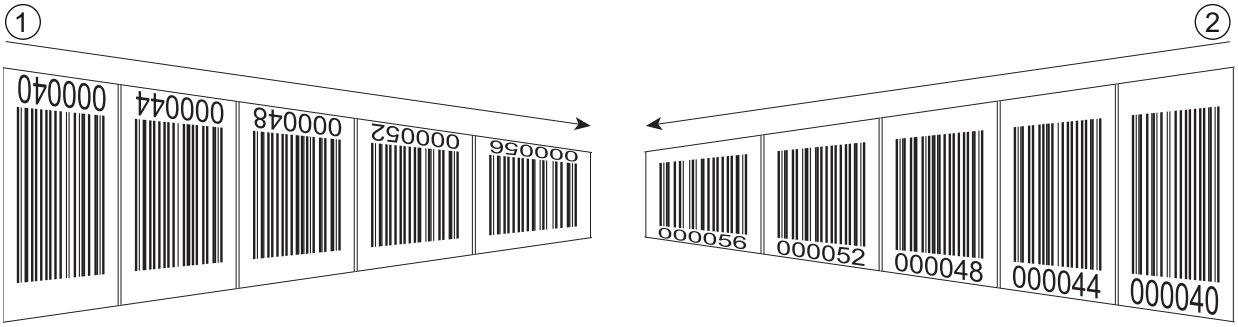

1 BCB affixed upside down
2 BCB affixed normally

Figure 6.7: Affixing two bar code tapes with the same value range

6.2 Bar code positioning system

The BPS can be mounted in the following ways:

- Mounting using a mounting device on the fastening grooves
  - BTU 0300M-W: Wall mounting
  - BT 56: Mounting on a rod
- Mounting using a mounting device on the M4 mounting threads on the rear of the device
  - BT 300 W: Mounting on a mounting bracket
  - BT 300-1: Mounting on a rod
- Mounting using four M4 mounting threads on the rear of the device

If the BTU 0300M-W mounting device is used to mount the device, the new device is automatically aligned correctly should it be necessary to exchange a device.

6.2.1 Mounting instructions

NOTICE

Select the mounting location.

- Make certain that the required environmental conditions (humidity, temperature) are maintained.
- Make certain that the distance between BPS and bar code tape is sufficiently large.

  The scanning beam of the BPS should cover three or more bar codes.

  The distance between BPS and bar code tape must be in the working range of the reading field curve.
- Make certain that the exit window does not become soiled, e.g., by leaking liquids, abrasion from cardboard packaging or residues from packaging material.
- Mounting the BPS outdoors or with BPS with integrated heating:

  Mount the BPS in a way which provides maximum thermal isolation, e.g., using rubber-bonded metal.

  Mount the BPS so that it is protected from airflow, e.g., in a protective housing.
- Mounting the BPS in a protective housing:

  When installing the BPS in a protective housing, ensure that the scanning beam can exit the protective housing without obstruction.
- Make certain that the scanning range determined from the scanning curve is adhered to at all locations where a position determination is to be made.
- Ensure that the scanning beam is always incident on the BCB when the system is moving.

  For the position calculation, the scanning beam of the BPS must be incident on the BCB without interruption.

  For the best functionality, the BPS must be guided parallel to the BCB. It is not permitted to move outside of the approved working range of the BPS (50 … 170 mm) while the system is in motion.
- Make certain that there is only one control bar code (or marker label) in the scanning beam at a time.

  The minimum distance between two control bar codes is determined by the distance between the BPS and bar code tape and the resulting length of the scanning beam.

NOTICE

For parallel mounting, maintain the minimum distance!

- Maintain the minimum distance of 300 mm if you mount two BPS next to or above one another.

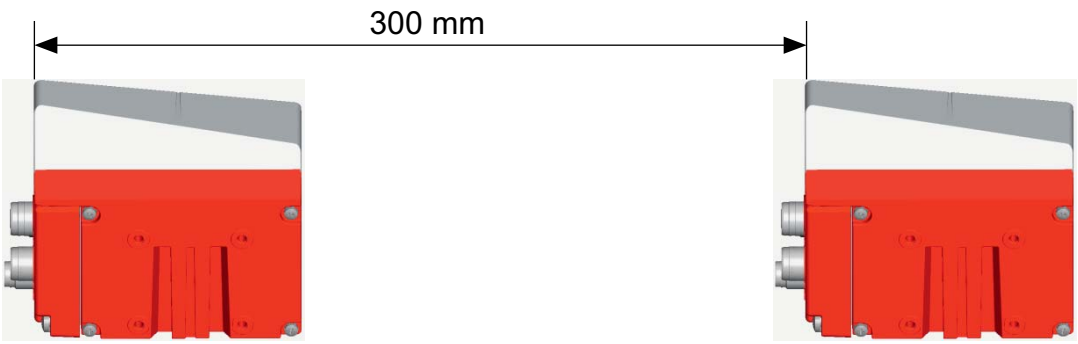

Figure 6.8: Minimum distance for parallel mounting

NOTICE

Install the connection hood before mounting the BPS!

- Screw the MS 304 or MK 304 connection hood to the device housing with two M4 screws.
- Tighten the screws on the connection hood with a tightening torque of 1.4 Nm.

6.2.2 Orientation of the BPS to the bar code tape

The beam of the BPS must be oriented at an incline of 7° to the bar code tape (see figure 6.9). When positioning, make certain that the angle of radiation to the rear side of the housing is 90 ° and the reading distance to the bar code tape is maintained.

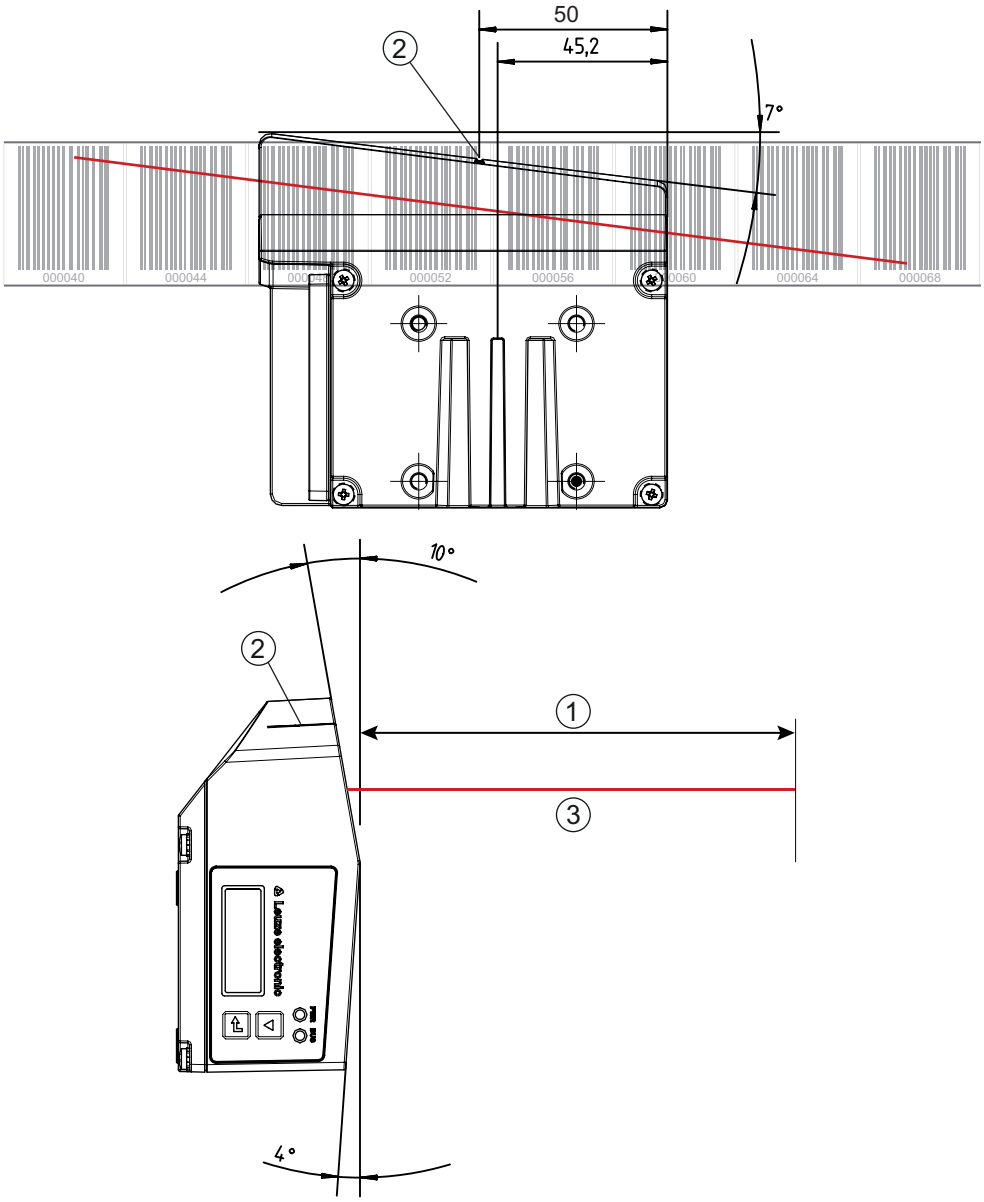

1 Reading distance
2 Reference point for the bar code position
3 Scanning beam

Figure 6.9: Beam exit

6.2.3 Mounting with the BTU 0300M-W mounting device

Mounting the BPS with a BTU 0300M-W mounting device is intended for wall mounting. For ordering information see chapter 14; for dimensioned drawing see figure 13.6.

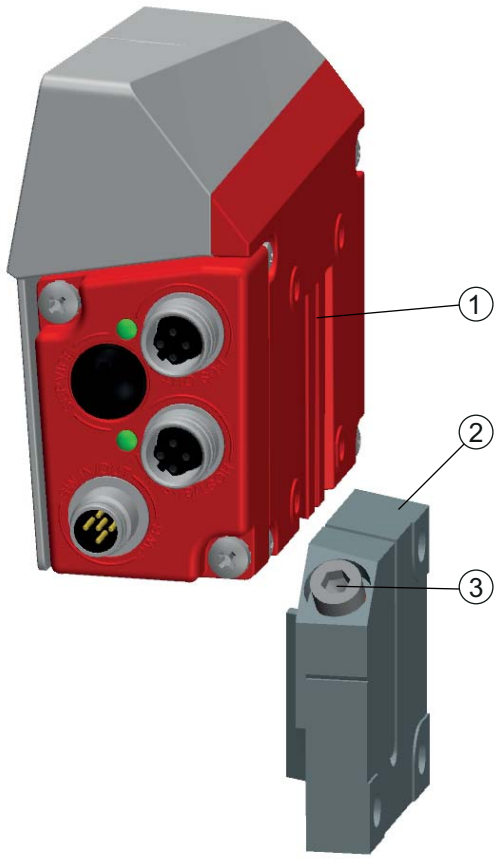

1 Clamp profile
2 Clamping jaws
3 Screw terminal

Figure 6.10: Mounting the BPS with the BTU 0300M-W mounting device

- Mount the BTU 0300M-W on the system side with M6 fastening screws (not included in delivery contents).
- Mount the BPS with the dovetail fastening grooves on the clamping jaws of the BTU 0300M-W with limit stop at end.
- Secure the BPS with the M6 screw terminal.

  Maximum tightening torque for the M6 screw terminal: 8 Nm

6.2.4 Mounting with the BT 300 W mounting bracket

Mounting of the BPS with a BT 300 W mounting bracket is intended for wall mounting. For ordering information see chapter 14; for dimensioned drawing see figure 13.7.

- Mount the BT 0300 W mounting bracket on the system side with M6 fastening screws (included in delivery contents).
- Mount the BPS on the mounting bracket with M4 fastening screws (included in delivery contents).

  Maximum tightening torque of the M4 fastening screws: 2 Nm

6.2.5 Mounting with BT 56 mounting device

Mounting of the BPS with a BT 56 mounting device is intended for rod mounting. For ordering information see chapter 14; for dimensioned drawing see figure 13.8.

- Mount the BT 56 on the rod with the clamp profile (system-side).
- Mount the BPS with its fastening grooves on the clamping jaws of the BT 56 with limit stop at end.
- Secure the BPS with the M6 screw terminal.

  Maximum tightening torque for the M6 screw terminal: 8 Nm

6.2.6 Mounting with BT 300-1 mounting device

Mounting of the BPS with a BT 300-1 mounting device is intended for rod mounting. For ordering information see chapter 14; for dimensioned drawing see figure 13.9.

- Mount the BT 300-1 mounting device with the clamp profile on the rod (system-side).
- Mount the BPS on the mounting bracket of the BT 300-1 with M4 fastening screws (included in delivery contents).

  Maximum tightening torque of the M4 fastening screws: 2 Nm

6.2.7 Mounting with M4 fastening screws

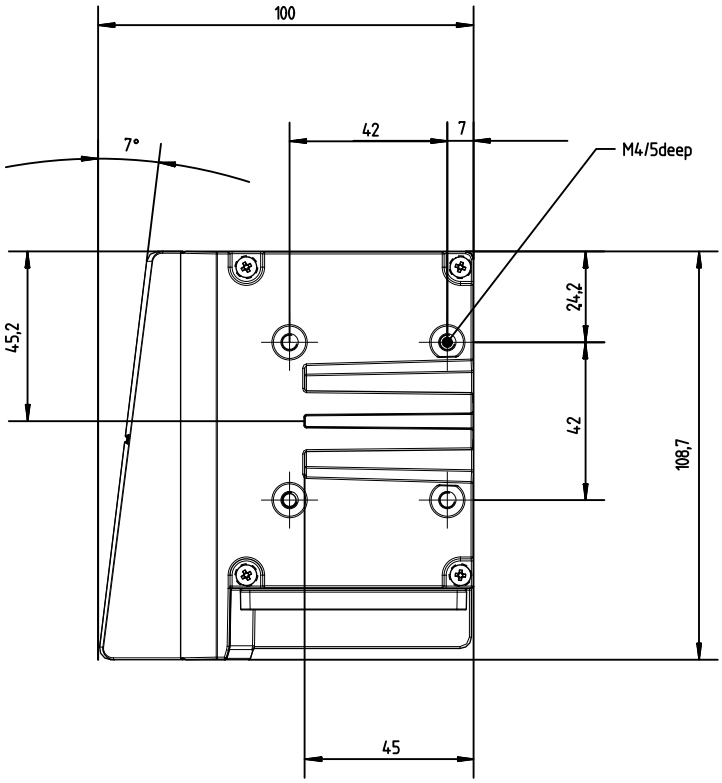

all dimensions in mm

Figure 6.11: Dimensioned drawing of rear of BPS

- Mount the BPS on the system with M4 fastening screws (not included in delivery contents).

  Maximum tightening torque of the fastening screws: 2 Nm

7 Electrical connection

CAUTION

Safety notices!

- Before connecting the device, be sure that the supply voltage agrees with the value printed on the name plate.
- Only allow competent persons to perform the electrical connection.
- Ensure that the functional earth (FE) is connected correctly.

  Fault-free operation is only guaranteed if the functional earth is connected properly.
- If faults cannot be rectified, take the device out of operation. Protect the device from accidentally being started.

CAUTION

UL applications!

- For UL applications, use is only permitted in Class 2 circuits in accordance with the NEC (National Electric Code).

NOTICE

Protective Extra Low Voltage (PELV)

- The BPS is designed in accordance with protection class III for supply with PELV (protective extra-low voltage).

NOTICE

Connection hood and degree of protection IP 65

- Before connecting, mount the connection hood on the BPS device housing.
- To ensure degree of protection IP 65 is fulfilled, the screws of the connection hood are tightened with a tightening torque of 1.4 Nm for connecting to the BPS.
- Degree of protection IP 65 is not fulfilled until connectors or cable bushings are screwed on and caps are installed.

For all connections (connection cable, interconnection cable, etc.), use only the cables listed in the accessories (see chapter 14).

7.1 External parameter memory in the connection hood

The MS 304 and MK 304 connection hoods store the PROFIBUS address and keep a copy of the current BPS parameter set ready.

- When the BPS is exchanged on-site, the PROFIBUS address does not have to be re-set; it stays in the connection hood. The PROFIBUS is not interrupted when the device is exchanged. BUS IN and BUS OUT are connected in the MS 304 and safeguard the operation of the PROFIBUS even in the case of device replacement.
- The address switch located in the connection hood is used to set the PROFIBUS address of the BPS 304i.
  If the BPS 304i is the last participant on the PROFIBUS cable, the socket on the MS 304 must be provided with a terminator plug (see table 14.3, Accessories) or the bus termination on the MK 304 must be activated with slide switch T (see figure 7.3).

7.2 MS 304 connection hood with connectors

The MS 304 connection hood features three M12 connector plugs and a Mini-B type USB socket as a service interface.

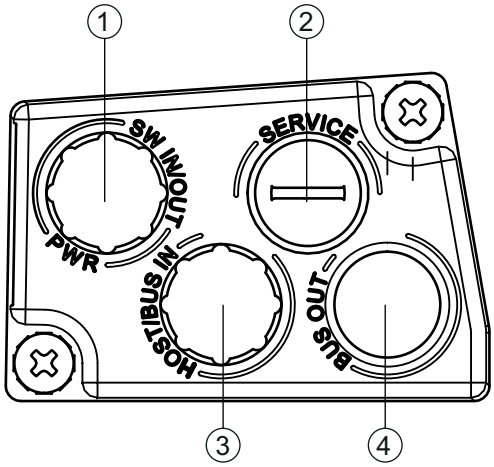

1 PWR / SW IN/OUT: M12 plug (A-coded)
2 SERVICE: Mini-B USB socket (behind protective cap)
3 HOST / BUS IN: M12 plug (B-coded), PROFIBUS 0
4 BUS OUT: M12 socket (B-coded), PROFIBUS 1

Figure 7.1: MS 304 connection hood, connections

NOTICE
Shielding connection and functional earth connection!
↳ The shielding connection is done via the M12 connector housing.
↳ Ensure that the functional earth (FE) is connected correctly. Unimpaired operation is only guaranteed when the functional earth is connected properly. All electrical disturbances (EMC couplings) are discharged via the functional earth connection.

NOTICE
PROFIBUS default address!
↳ PROFIBUS address 126 is set by default in the MS 304.
The integrated parameter memory for the simple replacement of the BPS 304i is located in the MS 304.

NOTICE
Bus interruption and bus termination!
↳ The PROFIBUS is looped through the MS 304, i.e. the bus is not interrupted when the BPS is removed from the MS 304.
↳ The bus is terminated at BUS OUT via an external mounted terminating resistor (see table 14.3).
If the termination is activated, the downstream bus cable is disconnected.

↳ Connect connection PWR / SW IN/OUT to the supply voltage or the switching inputs/outputs connection cable.

↳ Connect the HOST / BUS IN connection to the BUS OUT connection of the upstream BPS with the interconnection cable.

↳ Connect the BUS OUT connection to the HOST / BUS IN connection of the downstream BPS with the interconnection cable.

↳ If the current BPS 304i is the last PROFIBUS participant, connect a terminating resistor to connection BUS OUT.

7.3 MK 304 connection hood with spring-cage terminals

With the MK 304 connection hood, the BPS is connected directly and with no additional plug. The MK 304 features three cable bushings in which the shielding connection for the interface cable is also located. A Mini-B type USB socket is used for service purposes.

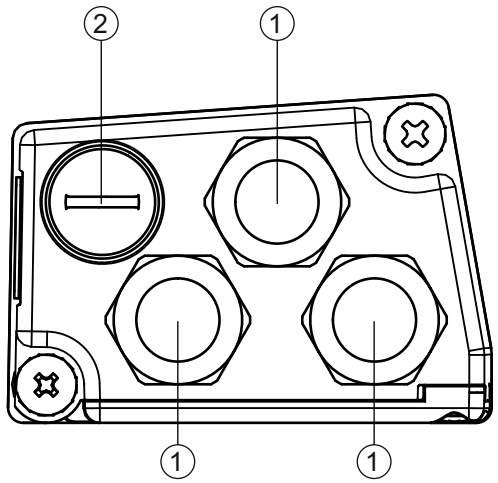

1 3x cable bushing, M16 x 1.5
2 SERVICE: Mini-B USB socket (behind protective cap)

Figure 7.2: Connection hood MK 304, connections

NOTICE
Cable fabrication!
↳ We recommend against using wire-end sleeves.

NOTICE
Functional earth connection!
↳ Ensure that the functional earth (FE) is connected correctly. Unimpaired operation is only guaranteed when the functional earth is connected properly. All electrical disturbances (EMC couplings) are discharged via the functional earth connection.

NOTICE
PROFIBUS default address!
↳ PROFIBUS address 126 is set by default in the MK 304. The integrated parameter memory for the simple replacement of the BPS 304i is located in the MK 304.

NOTICE
Bus interruption and bus termination
↳ The PROFIBUS is looped through the MK 304, i.e. the bus is not interrupted when the BPS 304i is removed from the MK 304. ↳ The bus is terminated via slide switch T in the MK 304 (see figure 7.3). If the termination is activated (slide switch T in the ON position), the downstream bus cable is disconnected.

↳ Connect the connection PWR / SW IN/OUT to the supply voltage or the switching inputs/outputs connection cable.

↳ Connect the HOST / BUS IN connection to the BUS OUT connection of the upstream BPS with the interconnection cable.

↳ Connect the BUS OUT connection to the HOST / BUS IN connection of the downstream BPS with the interconnection cable.

↳ If the current BPS 304i is the last PROFIBUS participant, set slide switch T to ON (see figure 7.3) to activate bus termination.

7.4 Pin assignment

7.4.1 PWR / SW IN/OUT (Power and switching input/output)

5-pin, M12 plug (A-coded) or terminal block for connecting to PWR / SW IN/OUT.

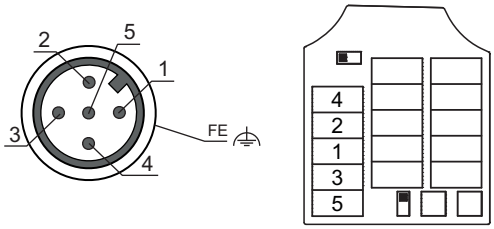

Figure 7.3: PWR / SW IN/OUT connection

Table 7.1: PWR / SW IN/OUT pin assignment

Pin/terminal	Designation	Assignment
1	VIN	+18 … +30 VDC supply voltage
2	SWIO1	Sw. input/output 1 (configurable)
3	GNDIN	Negative supply voltage (0 VDC)
4	SWIO2	Sw. input/output 2 (configurable)
5	FE	Functional earth
Thread (M12 plug) Cable gland	Functional earth	Connection cable shield. The shield of the connection cable is on the thread of the M12 plug or on the screw fitting of the cable bushing. The thread or the screw fitting is part of the metallic housing. The housing is at the potential of the functional earth via pin 5.

Connection cables: see table 14.4

⚠ CAUTION

UL applications!

↳ For UL applications, use is only permitted in Class 2 circuits in accordance with the NEC (National Electric Code).

Switching input/output

The BPS is equipped with two, freely programmable, optically decoupled switching inputs/outputs, SWIO1 and SWIO2.

- The switching inputs can be used to activate various internal functions of the BPS (e.g., Measurement Stop/Start, Teach Preset, Reset Preset).
- The switching outputs can be used to signal the state of the BPS and to implement external functions independent of the superior control (e.g. position value/speed value invalid, position and speed limit value exceeded, device error).
- The control can use switching inputs/outputs as digital I/Os.
  If no internal BPS function is connected to the switching inputs/outputs, the ports can be addressed as two inputs, two outputs or as one input and one output of a digital I/O component.

The function as an input or output is set via PROFIBUS parameters (see chapter 8.5) or using the webConfig configuration tool (**CONFIGURATION > DEVICE > Switching inputs/outputs**, (see chapter 9.3.2).

If SWIO1 or SWIO2 is to be used as digital input or output, the configuration must be performed in module 4 (see chapter 8.5.6) or module 5 (see chapter 8.5.7).

NOTICE
Maximum input current
↳ The input current of the respective switching input is maximum 8 mA.

NOTICE
Maximum loading of the switching outputs
↳ Do not load the respective switching output of the BPS with more than 60 mA at + 18 … 30 VDC in normal operation.
↳ Each configured switching output is short-circuit proof.

The two switching inputs/outputs, SWIO1 and SWIO2, are configured as follows by default:

Switching output SWIO1: Position value invalid

Switching input SWIO2: Teach Preset

NOTICE
SWIO1 and SWIO2 as switching output
↳ At the outputs of the BPS (SWIO1 and SWIO2), no switching outputs may be connected from external sensors/devices. The switching output of the BPS may otherwise malfunction.

7.4.2 HOST / BUS IN (Host/Bus input, PROFIBUS)

For the creation of a PROFIBUS network with multiple participants, the BPS is equipped with the incoming HOST / BUS IN PROFIBUS interface.
5-pin, M12-plug (B-coded) or terminal block for connecting to HOST / BUS IN.

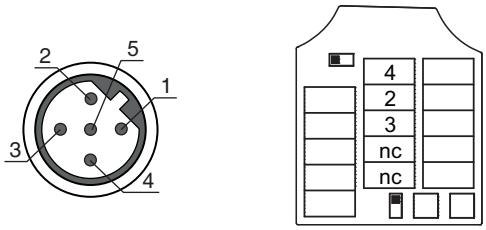

Figure 7.4: HOST / BUS IN connection

Table 7.2: HOST / BUS IN pin assignment

Pin/terminal	Designation	Assignment
1	nc	Not connected
2	A (N)	Receive Data/Transmit Data A-line (N)
3	GNDP	Data Ground

Pin/terminal	Designation	Assignment
4	B (P)	Receive Data/Transmit Data B-line (P)
5	FE	Functional earth
Thread (M12 plug) Cable gland	Functional earth (housing)	Connection cable shield. The shield of the connection cable is on the thread of the M12 plug or on the screw fitting of the cable bushing. The thread or the screw fitting is part of the metallic housing. The housing is at the potential of the functional earth via pin 5.

NOTICE
Use ready-made connection cables! ↳ If possible, use the ready-made cables from Leuze electronic (see table 14.5).

NOTICE
Self-configured cables with PROFIBUS interface! ↳ Ensure adequate shielding. The entire interconnection cable must be shielded and earthed. ↳ The signal lines must be stranded in pairs.

7.4.3 BUS OUT (bus output, PROFIBUS)

For the creation of a PROFIBUS network with multiple PROFIBUS participants, the BPS is equipped with the outgoing BUS OUT PROFIBUS interface. All other BPS devices are connected in series to the first BPS (see chapter 7.5).

5-pin, M12-socket (B-coded) or terminal block for connection to BUS OUT.

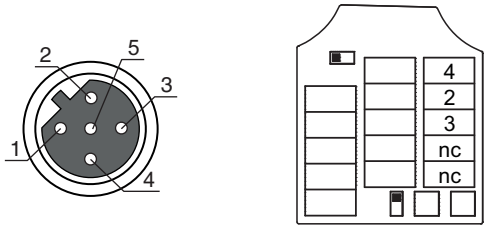

Figure 7.5: BUS OUT connection

Table 7.3: BUS OUT pin assignment

Pin/terminal	Designation	Assignment
1	VP	+5 V for bus termination
2	A (N)	Receive Data/Transmit Data A-line (N)
3	GNDP	Data Ground
4	B (P)	Receive Data/Transmit Data B-line (P)

Pin/terminal	Designation	Assignment
5	FE	Functional earth
nc	-	Not connected
Thread (M12 plug) Cable gland	Functional earth (housing)	Connection cable shield. The shield of the connection cable is on the thread of the M12 plug or on the screw fitting of the cable bushing. The thread or the screw fitting is part of the metallic housing. The housing is at the potential of the functional earth via pin 5.

NOTICE

Use ready-made connection cables!

↳ If possible, use the ready-made cables from Leuze electronic (see table 14.6 and see table 14.7).

NOTICE

Self-configured cables with PROFIBUS interface!

↳ Ensure adequate shielding.

The entire interconnection cable must be shielded and earthed.

↳ The signal lines must be stranded in pairs.

NOTICE

BUS OUT termination necessary at the last BPS bus participant!

If the termination is activated, the downstream bus cable is disconnected.

↳ Terminate the last physical PROFIBUS participant on the MS 304 connection hood with a terminating resistor on the BUS OUT socket; see table 14.3.

↳ Terminate the last physical PROFIBUS participant on the MK 304 connection hood with slide switch T (ON position, see figure 7.3).

7.4.4 Service USB

NOTICE

Connection to PC with standard USB cable!

↳ The service USB interface of the BPS is connected to the USB interface on the PC with a standard USB cable (plug combination - Mini-B type / Type A).

5-pin, Mini-B plug for connecting to the service USB.

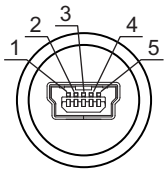

Figure 7.6: Service USB connection

Table 7.4: Service USB pin assignment

Pin	Designation	Assignment
1	VB	Sense input
2	D-	Data -
3	D+	Data +
4	ID	Not connected
5	GND	Ground

NOTICE
Use ready-made connection cables!
↳ If possible, use the ready-made cables from Leuze electronic; see table 14.9.

NOTICE
Self-configured cables!
↳ Ensure adequate shielding. The maximum cable length of 3 m must not be exceeded.

7.5 PROFIBUS topology

The wiring of the network is simple and economical since the network connection is looped through from one participant to the next.

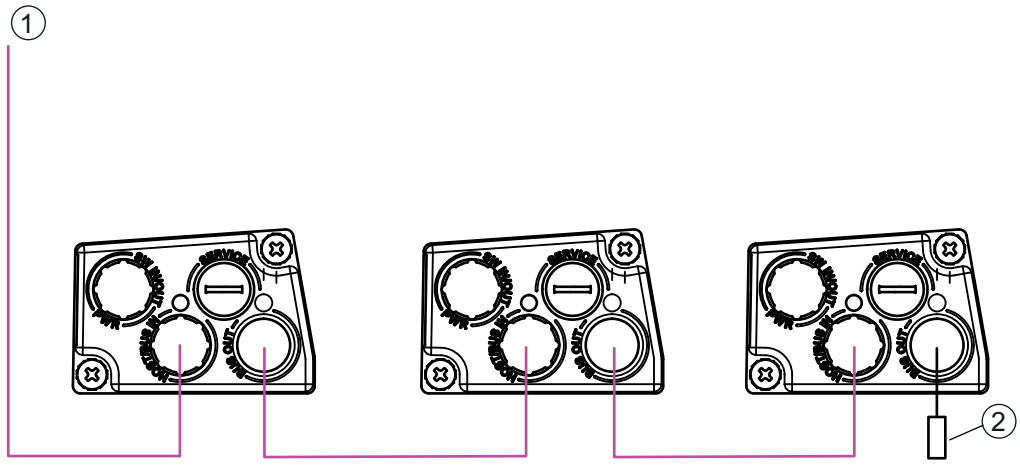

1 PROFIBUS master
2 Terminating resistor

Figure 7.7: Linear PROFIBUS topology

Up to 125 PROFIBUS participants can be networked.
On the connection hood, the address switch is used to assign a PROFIBUS address to each BPS.

NOTICE
PROFIBUS termination
↳ Terminate the last physical PROFIBUS participant on the MS 304 connection hood with a terminating resistor on the BUS OUT socket; see table 14.3. Terminate the last physical PROFIBUS participant on the MK 304 connection hood with slide switch T; see figure 7.3.

7.6 Cable lengths and shielding

Observe the maximum cable lengths and the shielding types:

Connection	Interface	Max. cable length	Shielding
BPS service	USB	3 m	Shielding absolutely necessary acc. to USB specifications
PROFIBUS	PROFIBUS DP	Acc. to PNO specifications	Shielding absolutely necessary acc. to PNO specifications
Switching input		10 m	Not necessary
Switching output		10 m	Not necessary
BPS power supply unit		30 m	Not necessary

8 Basic configuration

As a rule, the BPS is configured via the PROFIBUS interface. The PROFIBUS address is set via the address switch of the MS 304 or MK 304 connection hood.

Parameter changes for test purposes and extended configurations for the timing for the position and speed measurements can be performed via the webConfig tool (see chapter 9).

NOTICE
Observe for the configuration of PROFIBUS devices! ↳ **Always** perform the basic configuration using the GSD device master file. Download the appropriate file from the Internet. In process operation, only the parameters in the PROFIBUS modules set via the GSD file (or via the webConfig-Tool (HOME > INSTALLATION > GSD-file)) or the PROFIBUS default presets are in effect. Parameter changes made via the webConfig tool (see chapter 9) have no effect in PROFIBUS. If you switch the BPS to the *Service* operating mode via the webConfig tool, the BPS is disconnected from the PROFIBUS. All parameters set via the GSD file initially remain in effect. Parameter changes can now be made via the webConfig tool for test purposes. Settings configured with the webConfig tool are overwritten by the PROFIBUS master with the settings made via the GSD file upon connection to PROFIBUS or after deactivation of the *Service* operating mode. ↳ Configuration data is saved in the device **and** in the connection hood.

8.1 Configuring the PROFIBUS interface

The BPS is designed as a PROFIBUS DP device for cyclical data exchange (V0). The BPS supports a data transmission rate of up to 12 Mbit/s.

The functionality of the BPS is defined via parameters which are organized in modules. The modules are part of the device master file (GSD).

Function range:

- PROFIBUS-DP slave
- Modular structure of the IO data
- Automatic baud rate detection up to 12 Mbit/s
- SYNC/FREEZE
- FailSafe Mode
- Device-specific diagnostic data
- No change of the slave address via the PROFIBUS

8.1.1 Communication profile

The PROFIBUS communication profile defines how participants serially transmit their data via the transmission medium.

Depending on the communication requirements, PROFIBUS offers suitable protocols and transfer methods:

- The BPS supports the PROFIBUS DP communication profile for automation systems and decentral periphery.
  PROFIBUS DP is designed for efficient data exchange on the field level.
- Services are defined for data exchange.
  PROFIBUS DP differentiates between the services using the data access points transmitted in the telegram header.
- Data exchange with the decentral devices occurs primarily cyclically.
  For configuration, operation, observation and alarm handling, acyclic communication services can be used as an option.
- The necessary communication functions are defined in the DP base functions

8.1.2 Bus-access processes

The PROFIBUS communication profiles (DP,FMS) use a uniform bus-access process. It is implemented by layer 2 of the OSI model.

PROFIBUS bus-access processes are the token-passing process and the master-slave process.

The processes can be mixed in order to create a multi-master system. The BPS 304i functions both in a mono-master system as well as in a multi-master system.

Table 8.1: PROFIBUS bus-access processes

Process	Description	BPS 304i
Token-passing process	The bus-access permission is distributed by means of a token: • The participant obtains permission to transmit with the token. • The token wanders between the master devices in the ring in a permanently defined time frame. • The token-passing process is used for communication between the masters.	No
Master-slave process	Various slave devices are assigned to one master device: • The master can address the slaves which are assigned to it and fetch messages from them. • The master always has the initiative.	Yes

NOTICE
No slave-to-slave communication for BPS304i! ↳ The BPS 304i does not support slave-to-slave communication. The DPV2 PROFIBUS DP specification permits slave-to-slave communication.

8.1.3 Device types

The following device types exist for PROFIBUS DP:

- Master
- Slave

The BPS 304i is defined as a slave device in the device master file (GSD file)!

8.1.4 Automatic baud rate detection

The PROFIBUS implementation of the BPS 304i features automatic baud rate detection. The BPS 304i uses this function and offers no possibility for manual or permanent adjustment. The following baud rates are supported:

Baud rate kbit/s	9.6	19.2	93.75	187.5	500	1500	3000	6000	12000

Automatic baud rate detection is indicated in the device master file (GSD) of the BPS 304i:
Auto_Baud_supp = 1

8.2 Setting the PROFIBUS address

The PROFIBUS address is set on the connection hood with the help of two rotary switches and a slide switch:

- The PROFIBUS address must be individually set for each BPS 304i on the connection hood.
- The set PROFIBUS address must be ≥ 1 and ≤ 126.
  On delivery, the PROFIBUS address is set to 126.
  PROFIBUS address 126 may not be used for data communication; it may only be used temporarily for commissioning.

The BPS 304i does not support automatic address assignment via the PROFIBUS.

NOTICE
PROFIBUS termination
↳ Connection hood MS 304: terminate the last physical PROFIBUS participant with a terminating resistor on the BUS OUT socket (see table 14.3).
↳ Connection hood MK 304: terminate the last physical PROFIBUS participant with slide switch T on the connection hood (see figure 8.1).

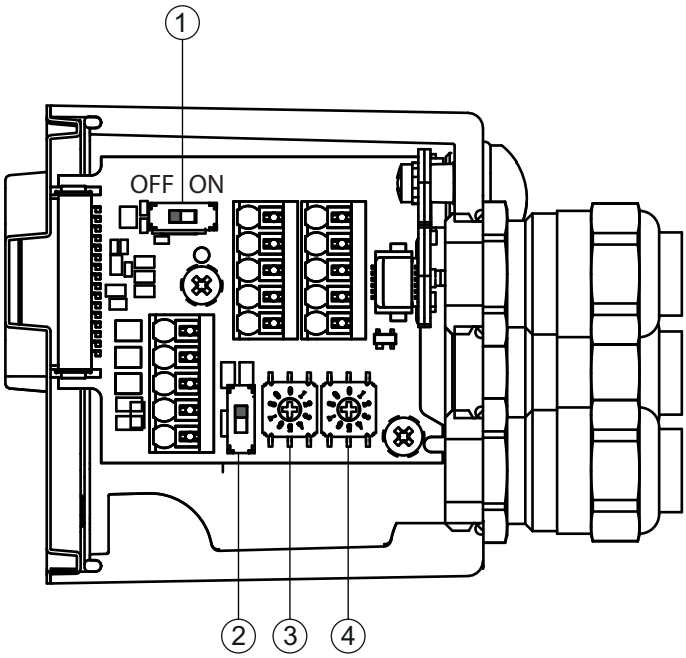

1 Slide switch T, PROFIBUS termination
2 Slide switch “x100”, hundreds digit (ON = address 100 … 126, OFF = address 1 … 99 can be set)
3 Rotary switch “x10”, tens digit
4 Rotary switch “x1”, ones digit
Factory settings: address 126

Figure 8.1: MK 304 connection hood, setting of the PROFIBUS address

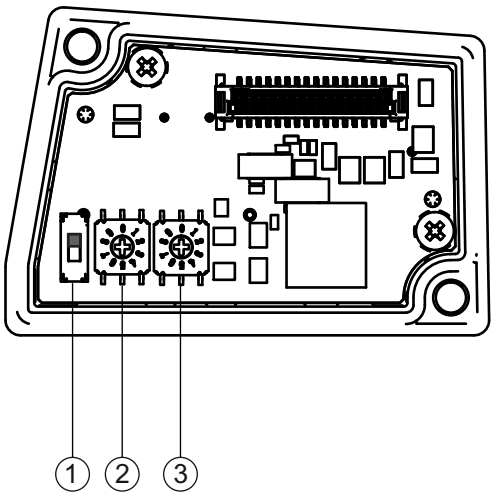

1 Slide switch “x100”, hundreds digit (ON = address 100 … 126, OFF = address 1 … 99 can be set)
2 Rotary switch “x10”, tens digit
3 Rotary switch “x1”, ones digit
Factory settings: address 126

Figure 8.2: MS 304 connection hood, setting of the PROFIBUS address

8.3 Starting the device

To start the BPS:

↳ Set the PROFIBUS address on the connection hood of the BPS.

↳ Connect the supply voltage.

The BPS starts up and, for devices with a display, the device status is displayed.

↳ Configure the BPS, e.g., for a Siemens SIMATIC-S7 control.

8.4 Configuring for the Siemens SIMATIC-S7 control

The BPS is designed as a PROFIBUS slave device.

The functionality of the BPS is defined via parameter sets which are organized in modules. The modules are part of the device master file (GSD), which is supplied as an integral part of the device.

By using a user-specific project tool, such as, e.g., Simatic Manager for the Siemens programmable logic control, the required modules are integrated into a project during commissioning and its settings and parameters are adjusted accordingly. These modules are provided by the GSD file.

During programming the control system (PLC) must be prepared for consistent data transmission.

NOTICE
Observe SIMATIC Manager version! ↳ For the Siemens SIMATIC-S7 control, you need at least SIMATIC Manager version 5.4 + service pack 5 (V5.4+SP5).

The following steps are necessary for commissioning:

- Preparation of the control system (S7 PLC)
- Installation of the GSD file

Proceed as follows:

↳ To prepare the control (S7 PLC):

Assign a PROFIBUS address to the control (S7 PLC)

Prepare the control system for consistent data transmission.

↳ Install the GSD file for the subsequent configuration of the BPS.

You can find the GSD file at www.leuze.com > Products > Measuring Sensors > Sensors for Positioning > BPS 300i > (Name of the BPS) > Tab Downloads > Software/driver > GSD file.

Alternatively, the GSD file can be loaded from the BPS with the webConfig tool (see chapter 9):

HOME > INSTALLATION > GSD file

The GSD file stored in the BPS is always compatible with the firmware version of the BPS.

General information on the GSD file

The term GSD (device master file) stands for the textual description of a PROFIBUS device model. Each GSD file supports one language.

In the GSD file, all data necessary for operating the BPS is described in modules: Input and output data, device parameters, definition of the control and status bits.

If parameters are changed in the project tool, for example, these changes are stored by the PLC in the project, not in the GSD file. The GSD file is an integral part of the device and must not be changed manually. The file is not changed by the system either.

The functionality of the BPS is defined via GSD parameters. The parameters and their functions are structured in the GSD file using modules. A user-specific configuration tool is used during PLC program creation to integrate the required modules and configure them appropriately for their respective use. During operation of the BPS on the PROFIBUS all parameters are set to default values. If these parameters are not changed by the user, the device functions with the default settings delivered by Leuze electronic. The default settings of the BPS can be found in the module descriptions.

GSD file name structure

Each GSD file supports one language. The name of the GSD file of the BPS 304i is structured as follows:

LEUZ0EA1.gs[x]

[x] = language-specific code letter: **d** (German), **e** (English), **f** (French), **i** (Italian), **s** (Spanish)

8.5 PROFIBUS project modules

From the perspective of the device, a distinction is made between interface-specific parameters and internal parameters:

- Interface-specific parameters
  Parameters that can be changed via the interface (see modules described in the following).
- Internal parameters
  Parameters that are changed only via a service interface.
  They retain their value even after the interface-specific configuration.

NOTICE
Overwriting of data by PLC!
↳ Note that the PLC overwrites the data set via the service interface.
↳ During the interface-specific configuration phase, all interface-specific parameters changed via the service interface are overwritten. This also applies for the parameters from modules that were not configured.
↳ During the configuration phase, the BPS receives parameter telegrams from the master.
Before the parameter telegrams are evaluated and the respective parameter values are set, all interface-specific parameters are reset to default values. This ensures that the parameters of modules that are not selected are set to the default values.

NOTICE
Do not activate any universal modules!
↳ If the control makes a so-called “universal module” available, the universal module may not be activated for the BPS.

You can find the default values of the BPS in the module descriptions.

8.5.1 Overview of the modules

Module	Module name	Module contents (P) = Parameter, (O) = Output, (I) = Input
Device parameter modules see page 57	Position value	Profile (P), Integration depth (P), Tape selection (P)
M1 see page 57	Position value	Sign (P), Unit (P), Position resolution (P), Counting direction (P), Offset (P), Position (I)
M2 see page 58	Static preset	Preset value (P), Teach Preset (O), Reset Preset (O)
M3 see page 59	Dynamic preset	Preset value (P), Teach Preset (O), Reset Preset (O)
M4 see page 60	Input/output IO 1	Function (P), Activation (P), Output (P), Input (P), State (I), Control output (O)
M5 see page 63	Input/output IO 2	Function (P), Activation (P), Output (P), Input (P), State (I), Control output (O)
M6 see page 65	Status and control	Measurement value invalid/not active (I), Preset active (I), Teach Preset toggle (I), Lower/upper position limit value 1 … 2 (I), Control/marker bar code detected (I), Control/marker bar code toggle (I), Temperature warning/error (I) Hardware defect (I), Reading quality warning/Error threshold (I), Standby active (I), Start/stop measurement (O), Activate/deactivate Standby (O), Acknowledge control/marker bar code (O)
M7 see page 67	Position limit value range 1	Upper/Lower pos. limit 1 (P)
M8 see page 67	Position limit value range 2	Upper/Lower pos. limit 2 (P)
M9 see page 68	Error handling procedures	Position value in the case of error (P), Suppress position state (P), Error delay/error delay time (position) (P), Speed in the case of error (P), Suppress speed state (P), Error delay/error delay time (speed) (P)
M10 see page 69	Speed	Speed resolution (P), Averaging (P), Speed (I)
M11 see page 70	Static speed limit value 1	Switching type (P), Selection of direction (P), Speed limit value 1 (P), Speed hysteresis 1 (P), Limit value 1 range start/range end (P)
M12 see page 71	Static speed limit value 2	Switching type (P), Selection of direction (P), Speed limit value 2 (P), Speed hysteresis 2 (P), Limit value 2 range start/range end (P)
M13 see page 71	Static speed limit value 3	Switching type (P), Selection of direction (P), Speed limit value 3 (P), Speed hysteresis 3 (P), Limit value 3 range start/range end (P)
M14 see page 72	Static speed limit value 4	Switching type (P), Selection of direction (P), Speed limit value 4 (P), Speed hysteresis 4 (P), Limit value 4 range start/range end (P)
M15 see page 72	Dynamic speed limit value	Limit value control (P), Switching type (P), selection of direction (P), Speed limit value (P), Hysteresis (P), Limit value range start/range end (P)
M16 see page 73	Speed state	Speed measurement error (I), Speed limit value 1 … 4 exceeded (I), Dynamic speed limit value exceeded (I), Movement status/direction (I), Speed limit value status 1 … 4 active (I), Dynamic speed limit value active (I)
M20 see page 74	Free resolution	Position (P), Speed (P)
M21 see page 75	Distance to BCB	Distance (I)

Module	Module name	Module contents (P) = Parameter, (O) = Output, (I) = Input
M22 see page 75	Control and marker bar codes	Reload (P), Transfer (P) First/second/third character (I)
M23 see page 76	Tape value correction	Real length (P), Range start/end(P)
M24 see page 76	Reading quality	Warning threshold/error threshold /reading quality smoothing (P), Reading quality (I)
M25 see page 77	Device status	Device status (I)
M26 see page 77	Extended status	Tape direction (I)
M28 see page 77	16-bit position value	16-bit position value (I)

8.5.2 Device parameter module – Permanently defined parameters

On the PROFIBUS, parameters may be stored in modules or may be defined permanently in a PROFIBUS participant. Depending on the configuration tool, the permanently defined but adjustable parameters are called “common” parameters or device-specific parameters.

The common parameters must always be present. They are defined outside of the configuration modules and are thus linked to the base module.

NOTICE
Set the tape selection! ↳ Set the *Tape selection* parameter according to the used bar code tape grid.

Common parameters/device-specific parameters:

Each PROFIBUS device must have a device parameter module.

The module contains device-specific parameters, but no input data and no output data.

Parameter	Rel. addr.	Data type	Value range	Default	Unit		Explanation
					Metr.	Inch	
Profile	0	Byte	2	2	----------		Defines the used device profile. **Note:** Currently, only the BPS profile is stored. Thus, no selection is possible. Number of the activated profile. 2: BPS profile
Integration depth	1.0 … 1.4	Bit field	2 … 16	8	Measurements		Number of successive measurements that the BPS uses for position determination.
Tape selection	1.5 … 1.6	Bit field	1: 30 mm BCB 2: 40 mm BCB	2	----------		Changeover between bar code tape (BCB) with 30 mm grid and 40 mm grid.

8.5.3 Module 1 – Position value

Module for the output of the current position value. The module also includes the most important parameters for formatting the output value.

The module contains parameters (with parameter data length of 6 bytes) and input data (with consistent input data length of 4 bytes), but no output data.

Parameter	Rel. addr.	Data type	Value range	Default	Unit		Explanation
					Metr.	Inch	
Sign	0.0	Bit	0 … 1	0	----------		Output mode of the sign. Affects position value and speed output: 0: Two's complement 1: Sign + quantity
Unit	0.1	Bit	0 … 1	0	----------		The selection of the measurement unit affects all values with measurement units. The parameter applies to all interfaces: 0: Metric (mm) 1: Inch (in)
Position resolution	0.2 … 0.4	Bit	1 … 6	4	mm	in/ 100	Resolution of the position value. Affects only the interface-specific output. The resolution has no effect on the set parameter values such as offset or preset: 001 = 1: 0.001 010 = 2: 0.01 011 = 3: 0.1 100 = 4: 1 101 = 5: 10 110 = 6: Free resolution
Counting direction	0.5	Bit	0 … 1	0	----------		Count direction for position calculation or sign for speed calculation. The parameter affects all interfaces: 0: Positive 1: Negative
Offset	1 … 4	sign 32 bit	-10,000,000 … +10,000,000	0	mm	in/ 100	Output value=measurement value+offset. The parameter affects all interfaces. **Note:** If a preset is active, this has priority over the offset.

Input data	Rel. addr.	Data type	Value range	Init value	Unit		Explanation
					Metr.	Inch	
Position	0.0	sign 32 bit	-2,000,000,000 … +2,000,000,000	0	Scaled		Current position.

NOTICE

Convert numerical values when changing the unit of measurement!

- If the unit of measurement is changed from metric to inch (or vice versa), previously entered numerical values (e.g. for offset, preset, limit values etc.) are not automatically converted.

  Example: Offset = 10000 mm – after changing from metric to inch: Offset = 10000 inch/100
- Manually convert the numerical values when changing the unit of measurement.

8.5.4 Module 2 – Static preset

With the module, it is possible to specify a static preset as a parameter and to activate this preset value at a suitable position (Teach Preset). The preset value is deactivated using the *Reset Preset* function. If the preset is activated, a set offset (module 1) is not used for the calculation of the position value (module 1).

An activated preset is stored in the BPS and in the connection hood. In the event of a device exchange, the values in the connection hood are retained. In the event of a device exchange including the connection hood, the preset value must be reactivated at the intended position (Teach Preset).

The module contains parameters (with parameter data length of 4 bytes) and output data (with output data length of 1 byte), but no input data.

Parameter	Rel. addr.	Data type	Value range	Default	Unit		Explanation
					Metr.	Inch	
Preset value	0	sign 32 bit	-10,000,000 … +10,000,000	0	mm	in/ 100	New position value for a teach event via the output data.

Output data	Rel. addr.	Data type	Value range	Init value	Unit		Explanation
					Metr.	Inch	
Preset teach	0.0	Bit	0 … 1	---	----------		Reading of the preset value (output value = preset value): Transition 0 → 1: Teach Preset
Preset reset	0.1	Bit	0 … 1	---	----------		Preset value is deactivated (output value = measurement value + offset): Transition 0 → 1: Reset Preset

8.5.5 Module 3 – Dynamic preset

With the module, it is possible to specify a dynamic preset as part of the output data and to activate this preset value at a suitable position (Teach Preset). The preset value is deactivated using the *Reset Preset* function. If the preset is activated, a set offset (module 1) is not used for the calculation of the position value (module 1).

A dynamic preset value can be ascertained at runtime in the PLC program and transmitted to the BPS. A static preset value (module 2) can only be stored in the configuration.

An activated preset is stored in the BPS and in the connection hood. In the event of a device exchange, the values in the connection hood are retained. In the event of a device exchange including the connection hood, the preset value must be reactivated at the intended position (Teach Preset).

The module contains output data (with output data length of 5 bytes), but no parameters and no input data.

Output data	Rel. addr.	Data type	Value range	Init value	Unit		Explanation
					Metr.	Inch	
Preset teach	0.0	Bit	0 … 1	---	----------		Read in the preset value: Transition 0 → 1: Teach Preset
Preset reset	0.1	Bit	0 … 1	---	----------		Preset value is deactivated: Transition 0 → 1: Reset Preset
Preset value	1	sign 32 bit	-10,000,000 … +10,000,000	---	----------		New position value for a teach event via bit 0.0.

8.5.6 Module 4 – Input/output IO 1

This module is used to set the mode of operation of digital input/output IO 1. The connection can be used as either an input or an output.

The output is activated by various events in the device.

If used as an input, a device function is controlled by an external signal.

Alternatively, the connection can also be used decoupled from the device:

- If used as an input, the state of an external signal is transmitted to the control in the input data.

- If used as an output, the connection is operated via the output data.

The module contains parameters (with parameter data length of 4 bytes), input data (with input data length of 1 byte) and output data (with output data length of 1 byte).

Parameter	Rel. addr.	Data type	Value range	Default	Unit		Explanation
					Metr.	Inch	
Function	0.0	Bit	0 … 1	1	----------		Mode: 0: Input 1: Output
Activation	0.1	Bit	0 … 1	1	----------		The parameter defines the level of the output at which the *Output* event occurs. 0: LOW (output), transition 1 → 0 1: HIGH (output), transition 0 → 1 If the I/O is configured as an input, it responds edge-triggered.

Parameter	Rel. addr.	Data type	Value range	Default	Unit		Explanation
					Metr.	Inch	
Output							Event for activating the output. The individual functions are OR-linked to one another.
	1.0	Bit	0 … 1	0	----------		**Position limit value 1:** If the position value lies outside of configured *Limit value range 1*, the output is set: 0: OFF 1: ON
	1.1	Bit	0 … 1	0	----------		**Position limit value 2:** If the position value lies outside of configured *Limit value range 2*, the output is set: 0: OFF 1: ON
	1.2	Bit	0 … 1	0	----------		**Speed limit value:** If the speed value lies outside of the configured values, the output is set. 0: OFF 1: ON
	1.3	Bit	0 … 1	0	----------		**Position value invalid:** If no valid position value can be ascertained because, e.g., no bar code tape is read or the bar codes are destroyed or soiled, the output is set. 0: OFF 1: ON
	1.4	Bit	0 … 1	0	----------		**Speed value invalid:** The output is set if no valid speed can be calculated. 0: OFF 1: ON
	1.5	Bit	0 … 1	0	----------		**Warning threshold reading quality:** If the ascertained reading quality is below the configured warning threshold, the output is set. 0: OFF 1: ON
	1.6	Bit	0 … 1	0	----------		**Error threshold reading quality:** If the ascertained reading quality is below the configured error threshold, the output is set. 0: OFF 1: ON
	1.7	Bit	0 … 1	0	----------		**Marker bar code or control bar code detected** If a marker bar code or a control bar code is located in the scanning beam, the output is set. 0: OFF 1: ON
	2.0	Bit	0 … 1	0	----------		**Pseudodynamic output:** The control can set and reset the output on the BPS via bit 0.0 in the output data 0: OFF 1: ON
	2.1	Bit	0 … 1	0	----------		**Device error:** If the BPS detects a device error, the output is set. 0: OFF 1: ON

Parameter	Rel. addr.	Data type	Value range	Default	Unit		Explanation
					Metr.	Inch	
Output							
	2.2	Bit	0 … 1	0	----------		**Speed limit value 1:** If the speed value 1 lies outside of the configured values, the output is set. 0: OFF 1: ON
	2.3	Bit	0 … 1	0	----------		**Speed limit value 2:** If the speed value 2 lies outside of the configured values, the output is set. 0: OFF 1: ON
	2.4	Bit	0 … 1	0	----------		**Speed limit value 3:** If the speed value 3 lies outside of the configured values, the output is set. 0: OFF 1: ON
	2.5	Bit	0 … 1	0	----------		**Speed limit value 4:** If the speed value 4 lies outside of the configured values, the output is set. 0: OFF 1: ON
Input	3	Bit field	0 … 3	0			**Internal functionality** that is triggered in the device. If *no internal function* is selected, the control can read the state of an arbitrary external signal via bit 0.0 of the input data. 0: No internal function 1: Stop/start measurement 2: Teach Preset 3: Reset Preset

Input data	Rel. addr.	Data type	Value range	Init value	Unit		Explanation
					Metr.	Inch	
State	0.0	Bit	0 … 1	---	----------		Signal state of the input or output: 0: Input/output not active at signal level 1: Input/output active at signal level

Output data	Rel. addr.	Data type	Value range	Init value	Unit		Explanation
					Metr.	Inch	
Control output	0.0	Bit	0 … 1	---	----------		Control of the output. The function must be activated/ deactivated via the parameters: 0: Output not active at signal level 1: Output active at signal level

Behavior of the BPS during measurement stop/start

If the scanning beam is incident on the BCB at the moment the laser diode is switched on, the BPS returns valid measurement values after approx. 10 ms.

If the BPS is reactivated from standby, the motor must first reach its nominal rotational speed. It takes a few seconds before the BPS returns any valid measurement values.

8.5.7 Module 5 – Input/output IO 2

This module is used to set the mode of operation of digital input/output IO 2. The connection can be used as either an input or an output.

The output is activated by various events in the device.

If used as an input, a device function is controlled by an external signal.

Alternatively, the connection can also be used decoupled from the device:

- If used as an input, the state of an external signal is transmitted to the control in the input data.

- If used as an output, the connection is operated via the output data.

The module contains parameters (with parameter data length of 4 bytes), input data (with input data length of 1 byte) and output data (with output data length of 1 byte).

Parameter	Rel. addr.	Data type	Value range	Default	Unit		Explanation
					Metr.	Inch	
Function	0.0	Bit	0 … 1	0	----------		Mode: 0: Input 1: Output
Activation	0.1	Bit	0 … 1	1	----------		The parameter defines the level of the output at which the *Output* event occurs. 0: LOW (output), transition 1 → 0 1: HIGH (output), transition 0 → 1 If IO 2 is configured as an input, it responds edge-triggered.

Parameter	Rel. addr.	Data type	Value range	Default	Unit		Explanation
					Metr.	Inch	
Output							Event for activating the output. The individual functions are OR-linked to one another.
	1.0	Bit	0 … 1	0	----------		**Position limit value 1:** If the position value lies outside of configured *Limit value range 1*, the output is set: 0: OFF 1: ON
	1.1	Bit	0 … 1	0	----------		**Position limit value 2:** If the position value lies outside of configured *Limit value range 2*, the output is set: 0: OFF 1: ON
	1.2	Bit	0 … 1	0	----------		**Speed limit value:** If the speed value lies outside of the configured values, the output is set. 0: OFF 1: ON
	1.3	Bit	0 … 1	0	----------		**Position value invalid:** If no valid position value can be ascertained because, e.g., no bar code tape is read or the bar codes are destroyed or soiled, the output is set. 0: OFF 1: ON
	1.4	Bit	0 … 1	0	----------		**Speed value invalid:** The output is set if no valid speed can be calculated. 0: OFF 1: ON
	1.5	Bit	0 … 1	0	----------		**Warning threshold reading quality:** If the ascertained reading quality is below the configured warning threshold, the output is set. 0: OFF 1: ON
	1.6	Bit	0 … 1	0	----------		**Error threshold reading quality:** If the ascertained reading quality is below the configured error threshold, the output is set. 0: OFF 1: ON
	1.7	Bit	0 … 1	0	----------		**Marker bar code or control bar code detected** If a marker bar code or a control bar code is located in the scanning beam, the output is set. 0: OFF 1: ON
	2.0	Bit	0 … 1	0	----------		**Pseudodynamic output:** The control can set and reset the output on the BPS via bit 0.0 in the output data 0: OFF 1: ON
	2.1	Bit	0 … 1	0	----------		**Device error:** If the BPS detects a device error, the output is set. 0: OFF 1: ON

Parameter	Rel. addr.	Data type	Value range	Default	Unit		Explanation
					Metr.	Inch	
Output							
	2.2	Bit	0 … 1	0	----------		**Speed limit value 1:** If the speed value 1 lies outside of the configured values, the output is set. 0: OFF 1: ON
	2.3	Bit	0 … 1	0	----------		**Speed limit value 2:** If the speed value 2 lies outside of the configured values, the output is set. 0: OFF 1: ON
	2.4	Bit	0 … 1	0	----------		**Speed limit value 3:** If the speed value 3 lies outside of the configured values, the output is set. 0: OFF 1: ON
	2.5	Bit	0 … 1	0	----------		**Speed limit value 4:** If the speed value 4 lies outside of the configured values, the output is set. 0: OFF 1: ON
Input	3	unsign 8 bit	0 … 3	0	----------		**Internal functionality** that is triggered in the device. If *no internal function* is selected, the control can read the state of an arbitrary external signal via bit 0.0 of the input data. 0: No internal function 1: Stop/start measurement 2: Teach Preset 3: Reset Preset

Input data	Rel. addr.	Data type	Value range	Init value	Unit		Explanation
					Metr.	Inch	
State	0.0	Bit	0 … 1	---	----------		Signal state of the input or output: 0: Input/output not active at signal level 1: Input/output active at signal level

Output data	Rel. addr.	Data type	Value range	Init value	Unit		Explanation
					Metr.	Inch	
Control output	0.0	Bit	0 … 1	---	----------		Control of the output. The function must be activated via the parameters: 0: Output not active at signal level 1: Output active at signal level

Behavior of the BPS during measurement stop/start

If the scanning beam is incident on the BCB at the moment the laser diode is switched on, the BPS returns valid measurement values after approx. 10 ms.

If the BPS is reactivated from standby, the motor must first reach its nominal rotational speed. It takes a few seconds before the BPS returns any valid measurement values.

8.5.8 Module 6 – Status and control

The module signals various status information of the BPS. Various device functions are controlled via the output data.

The module contains input data (with input data length of 2 bytes) and output data (with output data length of 2 bytes), but no parameters.

Input data	Rel. addr.	Data type	Value range	Init value	Unit		Explanation
					Metr.	Inch	
Measurement value invalid	0.0	Bit	0 … 1	0	----------		Signals that no valid measurement value can be ascertained. 0: Measurement value valid 1: Measurement value invalid
Measurement not active	0.1	Bit	0 … 1		----------		Signals an inactive measurement. 0: Measurement active 1: Measurement not active
Preset active	0.2	Bit	0 … 1	0	----------		Signals a position value output with active preset. 0: No preset active 1: Preset active
Teach Preset toggle	0.3	Bit	0 … 1	0	----------		This toggle bit changes its state on each Teach Preset event.
Lower position limit value 1	0.4	Bit	0 … 1	0	----------		Signals that the value is less than lower position limit 1. 0: OK 1: Value less than limit
Upper position limit value 1	0.5	Bit	0 … 1	0	----------		Signals that upper position limit 1 has been exceeded. 0: OK 1: Value greater than limit
Lower position limit value 2	0.6	Bit	0 … 1	0	----------		Signals that the value is less than lower position limit 2. 0: OK 1: Value less than limit
Upper position limit value 2	0.7	Bit	0 … 1	0	----------		Signals that upper position limit 2 has been exceeded. 0: OK 1: Value greater than limit
Control or marker bar code detected	1.0	Bit	0 … 1	0	----------		Signals a detected control or marker bar code. 0: No marker 1: Marker detected
Control or marker bar code toggle	1.1	Bit	1 … 5	0	----------		This toggle bit changes its state on each detected control or marker bar code. 0, 1: New marker
Temperature warning	1.2	Bit	1 … 5	0	----------		Signals that temperature is no longer within the specified temperature range. 0: OK 1: Temperature warning
Temperature error	1.3	Bit	0 … 1	0	----------		Signals that the maximum permissible temperature has been exceeded. 0: OK 1: Temperature error
Hardware defect	1.4	Bit	0 … 1	0	----------		Signals a hardware defect. 0: OK 1: Hardware defect
Warning threshold reading quality	1.5	Bit	0 … 1	0	----------		Signals that the ascertained reading quality has dropped below the configured warning threshold. 0: OK 1: Value less than limit
Error threshold reading quality	1.6	Bit	0 … 1	0	----------		Signals that the ascertained reading quality has dropped below the configured error threshold. 0: OK 1: Value less than limit
Standby active	1.7	Bit	0 … 1	0	----------		Signals an active standby. 0: No standby 1: Standby active

Output data	Rel. addr.	Data type	Value range	Init value	Unit		Explanation
					Metr.	Inch	
Stopping/starting the measurement	0.0	Bit	0 … 1	0	----------		With this bit, the measurement can be stopped and restarted. If the measurement is stopped, the BPS only deactivates the laser beam. If the measurement is restarted, measurement values are available again after a few milliseconds. 0: Measurement active 1: Stop measurement
Activate/deactivate standby	0.1	Bit	0 … 1	0	----------		With this bit, the BPS can be switched to standby; the BPS deactivates laser beam and motor. If standby is then deactivated, the motor must first reach its nominal rotational speed; as a result, it takes several seconds before measurement values are available again. 0: Not active 1: Activate
Acknowledge control or marker bar code	0.2	Bit	0 … 1	0	----------		With this bit, the acceptance of the detected control or marker bar code can be acknowledged to the PLC. Transition 0 → 1: Acknowledgment

8.5.9 Module 7 – Position limit value range 1

The module defines a position range with lower and upper limits. If the measured position value is outside of the configured range, the corresponding status bit is set in module 6 and, if configured, an output is set.

The module contains parameters (with parameter data length of 8 bytes), but no input data and no output data.

Parameter	Rel. addr.	Data type	Value range	Default	Unit		Explanation
					Metr.	Inch	
Lower pos. limit 1	0 … 3	sign 32 bit	-10,000,000 … +10,000,000	0	mm	in/ 100	Lower position limit.
Upper pos. limit 1	4 … 7	sign 32 bit	-10,000,000 … +10,000,000	0	mm	in/ 100	Upper position limit.

8.5.10 Module 8 – Position limit value range 2

The module defines a position range with lower and upper limits. If the measured position value is outside of the configured range, the corresponding status bit is set in module 6 and, if configured, an output is set.

The module contains parameters (with parameter data length of 8 bytes), but no input data and no output data.

Parameter	Rel. addr.	Data type	Value range	Default	Unit		Explanation
					Metr.	Inch	
Lower pos. limit 2	0 … 3	sign 32 bit	-10,000,000 … +10,000,000	0	mm	in/ 100	Lower position limit.
Upper pos. limit 2	4 … 7	sign 32 bit	-10,000,000 … +10,000,000	0	mm	in/ 100	Upper position limit.

8.5.11 Module 9 – Error handling procedures

The module makes parameters available to handle any errors should they occur.

If there is a brief disturbance in the position value or the speed calculation in the device, the BPS sends the last valid measurement value for a configured time.

If the BPS can again calculate valid measurement values within the error delay time, these are output. The disturbance is made evident only as a small increase in the output measurement value.

If the problem with the calculation lasts for a longer period of time, it is possible to configure how the BPS is to behave.

The module contains parameters (with parameter data length of 8 bytes), but no input data and no output data.

Parameter	Rel. addr.	Data type	Value range	Default	Unit		Explanation
					Metr.	Inch	
Position value in the case of failure	0.0 … 0.1	Bit	0 … 1	1	----------		Position value in the case of an error after the error delay time elapses: 0: Last valid value 1: Zero
Suppress position status	0.2	Bit	0 … 1	1	----------		Status bit (module 6 bit 0.0) in the case of an error: 0: OFF (status bit is set immediately) 1: ON (status bit is suppressed for the configured error delay time)
Error delay (position)	0.3	Bit	0 … 1	1	----------		Position value in the case of an error: 0: OFF (immediately the value of the *Position value in the case of error* parameter) 1: ON (the last valid position value for the configured error delay time)
Error delay time (position)	1 … 2	unsign 16 bit	10 … 4,000	50	1 ms		Errors that occur are suppressed for the configured time, i.e., if no valid position value can be ascertained in the configured time, the last valid position value is always output. If the error persists after the time elapses, the value of the *Position value in the case of error* parameter is output.
Speed in the case of failure	3.0 … 3.1	Bit	0 … 1	1	----------		Speed value in the case of an error after the error delay time elapses (speed): 0: Last valid value is output 1: Zero is output
Suppress speed status	3.2	Bit	0 … 1	1	----------		Status bit (module 16 bit 0.0) in the case of an error: 0: OFF (status bit is set immediately) 1: ON (status bit is suppressed for the configured error delay time)
Error delay (speed)	3.3	Bit	0 … 1	1	----------		Speed in the case of an error: 0: OFF (immediately outputs the value of the *Speed in the case of error* parameter) 1: ON (outputs the last valid speed for the configured error delay time)
Error delay time (speed)	4 … 5	unsign 16 bit	10 … 4,000	50	1 ms		Errors that occur are suppressed for the configured time, i.e., if no valid speed can be ascertained in the configured time, the last valid speed is always output. If the error persists after the time elapses, the value of the *Speed in the case of error* parameter is output.

8.5.12 Module 10 – Speed

The module is used to output the current speed in the desired resolution.

The unit (metric or inch) is set via module 1 (position value) and also applies to the speed. If module 1 is not configured, the value is output with the default unit of measurement (metric). The sign of the speed is dependent on the count direction selected in module 1. With the default counting direction (positive), a positive speed is output for movement towards larger tape values. Movement towards smaller tape values results in negative speeds. Measurement value preparation averages all speed values calculated during the selected period (averaging) to yield a speed output value.

The module contains parameters (with parameter data length of 2 bytes) and input data (with consistent input data length of 4 bytes), but no output data.

Parameter	Rel. addr.	Data type	Value range	Default	Unit		Explanation
					Metr.	Inch	
Speed resolution	0.0 … 0.2	Bit	1 … 5	1	mm /s	(in/ 100) /s	Resolution for the speed value: 001 = 1: 1 010 = 2: 10 011 = 3: 100 100 = 4: 1000 101 = 5: Free resolution
Averaging	0.3 … 0.5	Bit	0 … 5	2	----------		All calculated velocities are averaged over the specified time: 000 = 0: No averaging 001 = 1: 2 ms 010 = 2: 4 ms 011 = 3: 8 ms 100 = 4: 16 ms 101 = 5: 32 ms

Input data	Rel. addr.	Data type	Value range	Init value	Unit		Explanation
					Metr.	Inch	
Speed	0	sign 32 bit	-1,000,000 … +1,000,000	0	Scaled		Current speed.

8.5.13 Module 11 – Static speed limit value 1

The module provides all parameters for the Static speed limit value 1 function.

This function compares the current speed with a limit speed stored via the configuration. The comparison takes place in the configured range, which is defined by the *Range start* and *Range end* parameters.

If a direction-dependent limit value check is activated via the *Direction selection* parameter, the values of the *Range start* and *Range end* parameters also define the direction. The check is always performed from range start to range end.

Example: if the range start is *5500* and the range end is *5000*, the direction-dependent check is only performed in the direction from *5500* to *5000*.

If the check is independent of direction, the order of range start and range end is irrelevant. Depending on the selected switching mode, if the value is above or below the defined limits, the limit value status in module 16 (see chapter 8.5.18) is set and, if configured, the switching output is appropriately set via module 4 (see chapter 8.5.6) or module 5 (see chapter 8.5.7).

If the range start is identical to the range end, a continuous, direction-independent limit value check is performed.

The module contains parameters (with parameter data length of 13 bytes), but no input data and no output data.

Parameter	Rel. addr.	Data type	Value range	Default	Unit		Explanation
					Metr.	Inch	
Switching type	0.0	Bit	0 … 1	0	----------		Condition for the *Speed limit value 1* signal, which applies to the switching output (module 4/5) and the status bit (module 16): 0: Exceeded 1: Below minimum value
Direction selection	0.1	Bit	0 … 1	0	----------		Selection of the limit value check: 0: Direction independent 1: Direction dependent
Speed limit value 1	1 … 2	unsign 16 bit	0 … +20,000	0	mm /s	(in/ 100) /s	Limit value is compared to the current speed.
Speed hysteresis 1	3 … 4	unsign 16 bit	0 … 1,000	100	mm /s	(in/ 100) /s	Relative shift of the switching point to prevent signal bouncing.
Limit value 1 range start	5 … 8	sign 32 bit	-10,000,000 … +10,000,000	0	mm	in /100	The speed limit value is monitored beginning at this position.
Limit value 1 range end	9 … 12	sign 32 bit	-10,000,000 … +10,000,000	0	mm	in /100	The speed limit value is monitored up to this position.

8.5.14 Module 12 – Static speed limit value 2

The module provides all parameters for the Static speed limit value 2 function.

Further explanations on the *Range start* and *Range end* parameters see chapter 8.5.13 "Module 11 – Static speed limit value 1".

The module contains parameters (with parameter data length of 13 bytes), but no input data and no output data.

Parameter	Rel. addr.	Data type	Value range	Default	Unit		Explanation
					Metr.	Inch	
Switching type	0.0	Bit	0 … 1	0	----------		Condition for the *Speed limit value 2* signal, which applies to the switching output (module 4/5) and the status bit (module 16): 0: Exceeded 1: Below minimum value
Direction selection	0.1	Bit	0 … 1	0	----------		Selection of the limit value check: 0: Direction independent 1: Direction dependent
Speed limit value 2	1 … 2	unsign 16 bit	0 … +20,000	0	mm /s	(in/ 100) /s	Limit value is compared to the current speed.
Speed hysteresis 2	3 … 4	unsign 16 bit	0 … 1,000	100	mm /s	(in/ 100) /s	Relative shift of the switching point to prevent signal bouncing.
Limit value 2 range start	5 … 8	sign 32 bit	-10,000,000 … +10,000,000	0	mm	in /100	The speed limit value is monitored beginning at this position.
Limit value 2 range end	9 … 12	sign 32 bit	-10,000,000 … +10,000,000	0	mm	in /100	The speed limit value is monitored up to this position.

8.5.15 Module 13 – Static speed limit value 3

The module provides all parameters for the Static speed limit value 3 function.

Further explanations on the *Range start* and *Range end* parameters see chapter 8.5.13 "Module 11 – Static speed limit value 1".

The module contains parameters (with parameter data length of 13 bytes), but no input data and no output data.

Parameter	Rel. addr.	Data type	Value range	Default	Unit		Explanation
					Metr.	Inch	
Switching type	0.0	Bit	0 … 1	0	----------		Condition for the *Speed limit value 3* signal, which applies to the switching output (module 4/5) and the status bit (module 16): 0: Exceeded 1: Below minimum value
Direction selection	0.1	Bit	0 … 1	0	----------		Selection of the limit value check: 0: Direction independent 1: Direction dependent
Speed limit value 3	1 … 2	unsign 16 bit	0 … +20,000	0	mm /s	(in/ 100) /s	Limit value is compared to the current speed.

Parameter	Rel. addr.	Data type	Value range	Default	Unit		Explanation
					Metr.	Inch	
Speed hysteresis 3	3 … 4	unsign 16 bit	0 … 1,000	100	mm /s	(in/ 100) /s	Relative shift of the switching point to prevent signal bouncing.
Limit value 3 range start	5 … 8	sign 32 bit	-10,000,000 … +10,000,000	0	mm	in /100	The speed limit value is monitored beginning at this position.
Limit value 3 range end	9 … 12	sign 32 bit	-10,000,000 … +10,000,000	0	mm	in /100	The speed limit value is monitored up to this position.

8.5.16 Module 14 – Static speed limit value 4

The module provides all parameters for the Static speed limit value 4 function.

Further explanations on the *Range start* and *Range end* parameters see chapter 8.5.13 "Module 11 – Static speed limit value 1".

The module contains parameters (with parameter data length of 13 bytes), but no input data and no output data.

Parameter	Rel. addr.	Data type	Value range	Default	Unit		Explanation
					Metr.	Inch	
Switching type	0.0	Bit	0 … 1	0	----------		Condition for the *Speed limit value 4* signal, which applies to the switching output (module 4/5) and the status bit (module 16): 0: Exceeded 1: Below minimum value
Direction selection	0.1	Bit	0 … 1	0	----------		Selection of the limit value check: 0: Direction independent 1: Direction dependent
Speed limit value 4	1 … 2	unsign 16 bit	0 … +20,000	0	mm /s	(in/ 100) /s	Limit value is compared to the current speed.
Speed hysteresis 4	3 … 4	unsign 16 bit	0 … 1,000	100	mm /s	(in/ 100) /s	Relative shift of the switching point to prevent signal bouncing.
Limit value 4 range start	5 … 8	sign 32 bit	-10,000,000 … +10,000,000	0	mm	in /100	The speed limit value is monitored beginning at this position.
Limit value 4 range end	9 … 12	sign 32 bit	-10,000,000 … +10,000,000	0	mm	in /100	The speed limit value is monitored up to this position.

8.5.17 Module 15 – Dynamic speed limit value

The module provides the *dynamic speed limit value* function via output data.

The *dynamic speed limit value* function compares the current speed with a limit speed stored via the output data. The speed limit value can be dynamically changed, i.e., at runtime via the control program.

The speed comparison takes place in a range defined via the output data. Further explanations on the *Range start* and *Range end* parameters see chapter 8.5.13 "Module 11 – Static speed limit value 1".

The module contains output data (with parameter data length of 13 bytes), but no input data and no parameters.

Parameter	Rel. addr.	Data type	Value range	Default	Unit		Explanation
					Metr.	Inch	
Limit value control	0.0	Bit	0 … 1	---	----------		Controls internal processing of the transferred dynamic limit value parameters: 0: Do not process 1: Parameter now valid / process
Switching type	0.1	Bit	0 … 1	---	----------		Condition for the signal change of the switching output/status bit: 0: Speed limit value exceeded 1: Speed limit value not met
Direction selection	0.2	Bit	0 … 1	---	----------		Selection of the limit value check: 0: Direction independent 1: Direction dependent
Speed limit value	1 … 2	unsign 16 bit	0 … +20,000	---	mm /s	(in/ 100) /s	Limit value is compared to the current speed.
Hysteresis	3 … 4	unsign 16 bit	0 … 1,000	---	mm /s	(in/ 100) /s	Relative shift of the switching point to prevent signal bouncing.
Limit value range start	5 … 8	sign 32 bit	-10,000,000 … +10,000,000	0	mm	in /100	The speed limit value is monitored beginning at this position.
Limit value range end	9 … 12	sign 32 bit	-10,000,000 … +10,000,000	0	mm	in /100	The speed limit value is monitored up to this position.

8.5.18 Module 16 – Speed status

The module supplies the interface master with various status information for speed measurement via input data.

The module contains input data (with input data length of 2 bytes), but no parameters and no output data.

Input data	Rel. addr.	Data type	Value range	Init value	Unit		Explanation
					Metr.	Inch	
Speed measurement error	0.0	Bit	0 … 1	---	----------		Signals that no valid speed could be ascertained: 0: No speed limit value violation 1: Speed limit value violation
Speed limit value 1 exceeded	0.1	Bit	0 … 1	---	----------		Signals that speed limit value 1 has been exceeded: 0: No limit value violation 1: Value greater than limit
Speed limit value 2 exceeded	0.2	Bit	0 … 1	---	----------		Signals that speed limit value 2 has been exceeded: 0: No limit value violation 1: Value greater than limit
Speed limit value 3 exceeded	0.3	Bit	0 … 1	---	----------		Signals that speed limit value 3 has been exceeded: 0: No limit value violation 1: Value greater than limit
Speed limit value 4 exceeded	0.4	Bit	0 … 1	---	----------		Signals that speed limit value 4 has been exceeded: 0: No limit value violation 1: Value greater than limit
Dynamic speed limit value exceeded	0.5	Bit	0 … 1	---	----------		Signals that the dynamic speed limit value has been exceeded: 0: No limit value violation 1: Value greater than limit
Movement status	0.6	Bit	0 … 1	---	----------		Signals whether a movement > 0.1 m/s is currently being detected: 0: No movement 1: Movement
Direction of movement	0.7	Bit	0 … 1	---	----------		If bit 1 (movement status) is set, this bit indicates the direction: 0: Positive direction 1: Negative direction

Input data	Rel. addr.	Data type	Value range	Init value	Unit		Explanation
					Metr.	Inch	
Speed limit value 1 active	1.1	Bit	0 … 1	---	----------		Signals whether the current speed is compared with the Speed limit value 1: 0: Comparison not active 1: Comparison active
Speed limit value 2 active	1.2	Bit	0 … 1	---	----------		Signals whether the current speed is compared with the Speed limit value 2: 0: Comparison not active 1: Comparison active
Speed limit value 3 active	1.3	Bit	0 … 1	---	----------		Signals whether the current speed is compared with the Speed limit value 3: 0: Comparison not active 1: Comparison active
Speed limit value 4 active	1.4	Bit	0 … 1	---	----------		Signals whether the current speed is compared with the Speed limit value 4: 0: Comparison not active 1: Comparison active
Dynamic speed limit value active	1.5	Bit	0 … 1	---	----------		Signals whether the current speed is compared with the Dynamic speed limit value: 0: Comparison not active 1: Comparison active

8.5.19 Module 20 – Free resolution

The module is used to implement two parameters that facilitate free scaling of the output values for position value and speed value.

The free resolution is used if the adjustable resolutions that can be set in module 1 or module 10 are not suitable for the application. In modules 1 and 10, the *Resolution* parameter is set to value *Free resolution*. The measurement values are then converted for output with (multiplied by) the parameter values stored in this module and output.

The module contains parameters (with parameter data length of 4 bytes), but no input data and no output data.

Parameter	Rel. addr.	Data type	Value range	Default	Unit		Explanation
					Metr.	Inch	
Position	0 … 1	unsign 16 bit	5 … 50,000	1000	mm /1000	in /100000	Free resolution of the position value: Applies for all interfaces that selected the value *free resolution* as resolution.
Speed	2 … 3	unsign 16 bit	5 … 50,000	1000	(mm /1000) /s	(in /100000) /s	Free resolution of the speed value. Applies for all interfaces that selected the value *free resolution* as resolution.

8.5.20 Module 21 – distance to the bar code tape (BCB)

The module enables the transmission of the current distance between the BCB and read head (in mm) to the interface master.

This can be used to check the correct reading distance in the entire system.

Example: A fault in the position value determination is caused by an impermissible reading distance at this location.

If value *255* is transmitted, a reading distance outside of the permissible reading field was calculated.

If value *0* is transmitted, a valid distance could not be calculated.

The module contains input data (with input data length of 1 byte), but no parameters and no output data.

Input data	Rel. addr.	Data type	Value range	Init value	Unit		Explanation
					Metr.	Inch	
Distance	0	unsign 8 bit	0 … 255	0	mm	in/10	Current distance between BCB and read head: 0: No distance calculated 255: Distance outside of the reading field

8.5.21 Module 22 – Control and marker bar codes

The module enables the transmission of control and marker information to the interface master and setting of the corresponding parameters.

The module contains parameters (with parameter data length of 1 byte) and input data (with input data length of 3 bytes), but no output data.

Parameter	Rel. addr.	Data type	Value range	Default	Unit		Explanation
					Metr.	Inch	
Reload	0.0	Bit	0 … 1	0	----------		Configuration for input data: 0: Immediately overwrite input data 1: Overwrite input data after acknowledgment
Transmission	0.1	Bit field	0 … 2	0	----------		Configuration of which information is transmitted in the input data: 0: Control and marker bar codes 1: Only marker bar codes 2: Only control bar codes

Input data	Rel. addr.	Data type	Value range	Init value	Unit		Explanation
					Metr.	Inch	
First character	0	unsign 8 bit	0 … 255	0	----------		First character of the detected control or marker bar code.
Second character	1	unsign 8 bit	0 … 255	0	----------		Second character of the detected control or marker bar code.
Third character	2	unsign 8 bit	0 … 255	0	----------		Third character of the detected control or marker bar code.

8.5.22 Module 23 – Tape value correction

The module enables the *Tape value correction* functionality for correcting the deviation of the BCB from the correct (calibrated) millimeter scaling that results from the manufacturing process.

A suitable measuring device must be used to determine the real (calibrated) length of one meter of bar code tape (as printed). If, for example, one meter of tape corresponds to an actual (calibrated) length of 1001.4 mm, the value *10014* is entered in the *Real length* parameter of this module. The real length is specified with a resolution of 1/10 millimeters.

To use the exact resolution, it is useful to measure a longer section of BCB and convert the deviation to a length of one meter.

The *Range start* parameter must be configured according to the real starting value of the used bar code tape. If multiple, different BCBs are pieced together, the *Range end* parameter of the corrected section of tape must also be configured. The entire BCB is corrected with the default value of *10,000,000* for the range end.

The module contains parameters (with parameter data length of 10 bytes), but no input data and no output data.

Parameter	Rel. addr.	Data type	Value range	Default	Unit		Explanation
					Metr.	Inch	
Real length	0	unsign 16 bit	0 … 65,535	10,000	mm /10		Real (calibrated) length of one meter of BCB (according to imprint).
Range start	2	unsign 32 bit	0 … 10,000,000	0	mm		The tape value is corrected with the *real length* starting from this position.
Range end	6	unsign 32 bit	0 … 10,000,000	10,000,000	mm		The tape value is corrected with the *real length* up to this position.

8.5.23 Module 24 – Reading quality

The module enables the *Reading quality* functionality for transmitting the BPS reading quality and for configuring the parameters for warning threshold, error threshold and smoothing of the reading quality.

By transmitting the reading quality, continuous monitoring is possible. The operator can immediately see when the reading quality deteriorates due to wear or soiling.

The signaling of the reading quality is configured via the status information in module 6 (see chapter 8.5.8) and via the switching output functions in module 4 (see chapter 8.5.6) or module 5 (see chapter 8.5.7).

The module contains parameters (with parameter data length of 2 bytes) and input data (with input data length of 1 byte), but no output data.

Parameter	Rel. addr.	Data type	Value range	Default	Unit		Explanation
					Metr.	Inch	
Warning threshold reading quality	0	unsign 8 bit	30 … 90	60	----------		Below this threshold for reading quality in units of [%], the BPS generates a warning event.
Error threshold reading quality	1	unsign 8 bit	10 … 70	30	----------		Below this threshold for reading quality in units of [%], the BPS generates an error event.
Reading quality smoothing	2	unsign 8 bit	0 … 100	5	----------		Insensitivity towards changes of the quality. The higher this value is, the less of an effect a change has on the reading quality.

Input data	Rel. addr.	Data type	Value range	Init value	Unit		Explanation
					Metr.	Inch	
Reading quality	0	unsign 8 bit	0 … 100	0	%	%	Reading quality in units of [%] as smoothed value, dependent on the *Smoothing of reading quality* parameter.

8.5.24 Module 25 – Device status

The module signals various device states via input data.

The module contains input data (with input data length of 1 byte), but no parameters and no output data.

Input data	Rel. addr.	Data type	Value range	Init value	Unit		Explanation
					Metr.	Inch	
Device status	0	unsign 8 bit	0: Initial value 1: Initialization 10: Standby 11: Service 12: Diagnostics 15: Device is ready 128: Error 129: Warning	0	----------		This byte represents the current device status.
Input data length: 1 byte							

8.5.25 Module 26 – Extended status

Via input data, the module signals various pieces of extended status information, such as the current read direction of the bar code tape.

The module contains input data (with input data length of 2 bytes), but no parameters and no output data.

Input data	Rel. addr.	Data type	Value range	Init value	Unit		Explanation
					Metr.	Inch	
Increasing tape direction	0.0	BIT	0: Not increasing 1: increasing	0	----------		The orientation between BPS and bar code tape (BCB) results in an increasing read direction. If bits 0.0 and 0.1 are not set (0), no read direction can currently be determined.
Decreasing tape direction	0.1	BIT	0: Not decreasing 1: Decreasing	0	----------		The orientation between BPS and bar code tape (BCB) results in a decreasing read direction. If bits 0.0 and 0.1 are not set (0), no read direction can currently be determined.
Input data length: 2 bytes							

8.5.26 Module 28 - 16-bit position value

Module for the output of the current position value as 16-bit value. The resolution of the position value is fixed and is one decimeter (100 mm) or one inch (in).

The display of the sign and the measurement unit can be changed in module 1 (see chapter 8.5.3).

In the default setting, the display is in two's complement and with metric units. If the 16-bit value range is exceeded, e.g., above an output value of 3.27675 km (= 32768 dm), the value zero (0) is transmitted as position value in this module.

The module contains input data (with input data length of 2 bytes), but no parameters and no output data.

Input data	Rel. addr.	Data type	Value range	Init value	Unit		Explanation
					Metr.	Inch	
16-bit position value	0	sign 16 bit	With two's complement: -32768 … 32767 With sign and magnitude: -32767 … 32767	0	dm (100 mm)	inch	Position value as 16-bit value with fixed resolution of one decimeter (100 mm) or one inch (in).
Input data length: 2 bytes							

9 Leuze electronic webConfig tool – Extended configuration

With the Leuze electronic webConfig tool, an operating-system independent, web-technology based, graphical user interface is available for configuring the BPS.

The webConfig tool can be run on any Internet-ready PC. The webConfig tool uses HTTP as communication protocol and the client-side restriction to standard technologies (HTML, JavaScript and AJAX) that are supported by modern browsers.

The webConfig tool is offered in the following languages:

German, English, French, Italian, Spanish

NOTICE
Configuration changes via the webConfig tool have no effect in PROFIBUS!
↳ **Always** perform the basic configuration using the GSD file (see chapter 8 "Basic configuration").
In process operation, only the parameters in the PROFIBUS modules set via the GSD file or the PROFIBUS default presets are in effect. Parameter changes made via the webConfig tool are no longer in effect on the PROFIBUS.
The parameters for the timing of the switching inputs/outputs can only be adjusted with the webConfig tool.
If you switch the BPS to the *Service* operating mode via the webConfig tool, the BPS is disconnected from the PROFIBUS. All parameters set via the GSD file initially remain in effect. Parameter changes can now be made via the webConfig tool for test purposes.
Settings configured with the webConfig tool are overwritten by the PROFIBUS master with the settings made via the GSD file upon connection to PROFIBUS or after deactivation of the *Service* operating mode. Settings that cannot be configured via PROFIBUS, e.g., timing functions, are not overwritten.

NOTICE
BPS configuration via webConfig tool
↳ The webConfig tool displays **no** PROFIBUS parameters.
↳ The configuration data is saved in the device **and** in the connection hood.

9.1 Installing software

In order for the BPS to be automatically detected by the connected PC, the USB driver must be installed once on your PC. Administrator rights are required for driver installation.

If a USB driver for the webConfig tool is already installed on your computer, the USB driver does not need to be installed again.

9.1.1 System requirements

Regularly update the operating system and the Internet browser.

Install the current Windows Service Packs.

Table 9.1: webConfig system requirements

Operating system	Windows XP (Home Edition, Professional) Windows Vista Windows 7 Windows 8
Computer	PC with USB interface version 1.1 or higher
Graphics card	Min. 1024 x 768 pixels or higher resolution
Required disk space for USB driver	10 MB
Internet browser	Internet Explorer version 8.0 or higher Firefox version 4.0 or higher

9.1.2 Install USB driver

- Start your PC with administrator privileges and log on.
- Download the setup program from the Internet:

  www.leuze.com > Products > Measuring Sensors > Sensors for Positioning > BPS 300i > (Name of the BPS) > Tab Downloads > Software/driver.
- Start the setup program and follow the instructions.

Alternatively, you can manually install the **LEO_RNDIS.inf** USB driver.

Contact your network administrator if the installation fails.

9.2 Start webConfig tool

Prerequisite: The Leuze electronic USB driver for the webConfig tool is installed on the PC.

- Connect the operating voltage to the BPS.
- Connect the SERVICE USB interface of the BPS to the PC.

  The connection to the SERVICE USB interface of the BPS is established via the PC-side USB interface.

  Use a standard USB cable with one Type A plug and one Mini-B type plug.
- Start the webConfig tool using your PC's Internet browser with IP address **192.168.61.100**

  This is the default Leuze electronic service address for communication with bar code positioning systems of the BPS 300i series.

The webConfig start page appears on your PC.

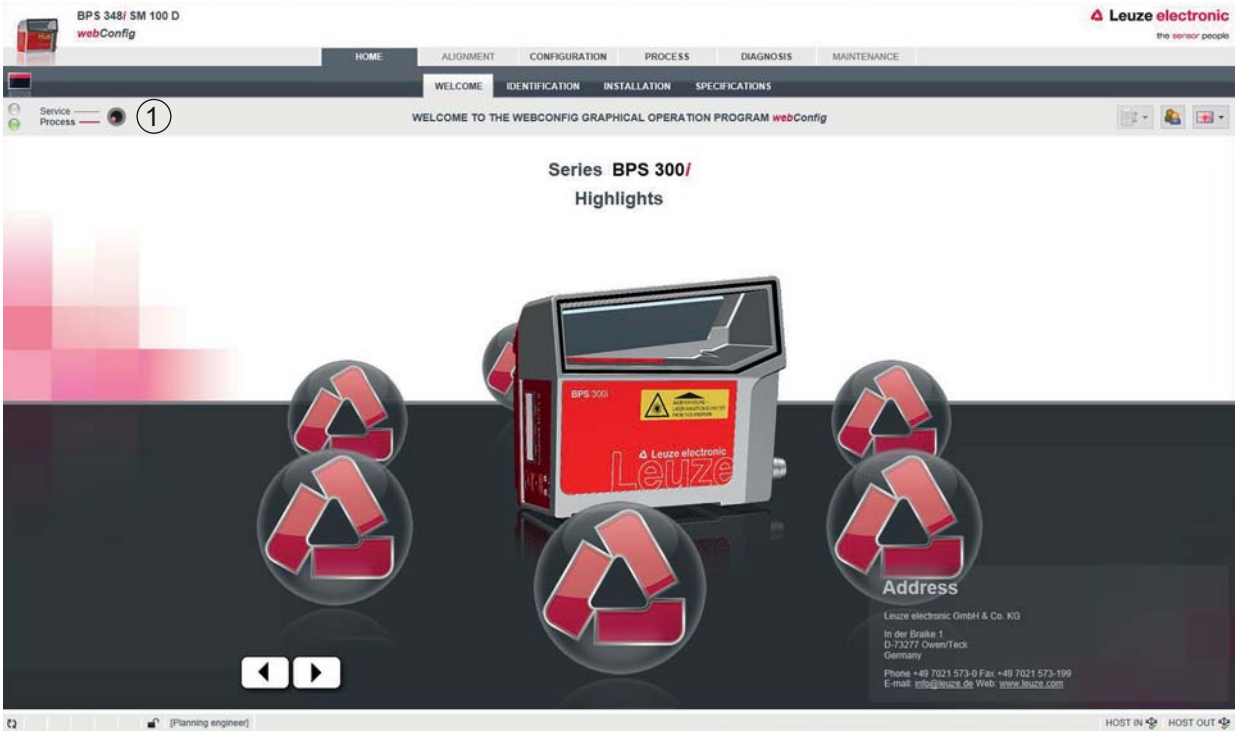

1 Changing the operating mode (*Process* - *Service*) (upper left)

Figure 9.1: The start page of the webConfig tool

The user interface of the webConfig tool is largely self-explanatory.

The webConfig tool is completely contained in the firmware of the BPS.

The pages and functions of the webConfig tool may appear and be displayed differently depending on the firmware version.

Clear browser history

The cache of the Internet browser must be deleted if different device types or devices with different firmware have been connected to the webConfig tool.

↳ Delete cookies and temporary Internet and website data from browser history before starting the webConfig tool.

Example for Internet Explorer 10:

Settings > Security > Browser History > [Delete]

Note limit of Firefox sessions for version 17.0 and higher

If the limited number of Firefox sessions is exceeded, it may no longer be possible to address the BPS via the webConfig tool.

↳ Do **not** use the refresh functions of the Internet browser:

[Shift] [F5] or [Shift] + mouse click

9.3 Short description of the webConfig tool

9.3.1 Overview

Operating modes

For configurations with the webConfig tool, you can switch between the following operating modes:

- *Process*
  The BPS is connected to the control.
  - The process communication to the control is activated.
  - The switching inputs/outputs are activated.

  - The configuration cannot be changed.
  - *PROCESS* function available.
  - *ALIGNMENT* function not available.
- *Service*
  - The process communication to the control is interrupted.
  - The switching inputs/outputs are deactivated.
  - The configuration can be changed.
  - *PROCESS* function not available.
  - *ALIGNMENT* function available.

Functions

In the *Process* operating mode, the webConfig tool has the following main menus and functions:

- *HOME*
  Information on the connected BPS as well as on installation.
  This information corresponds to the information in the current technical description.
- *CONFIGURATION* (see chapter 9.3.2)

  Information on the current BPS configuration – no change to the configuration:
  - Selection of the used bar code tape (30 mm grid or 40 mm grid)
  - Display of the tape value correction (deviation of the BCB from scaling)
  - Display of the device components (switching inputs/outputs, display)
  - Data processing (position/speed detection or monitoring, data preparation)
  - Display of the warning threshold and the error threshold for the reading quality
  - Display of the interface parameters
- *PROCESS*
  Check and save the current read data in process mode (see chapter 9.3.4).
  - Tabular display of the following values:
    Scan number, position, speed, reading quality, distance from BCB, info on the control label

In the *Service* operating mode, the webConfig tool also has the following main menus and functions:

- *CONFIGURATION* (see chapter 9.3.2)
  - Configuration of device components (switching inputs/outputs, display)
  - Selection of the used bar code tape
  - Configuration of the data processing (position/speed detection or monitoring, data preparation)
  - Configuration of the warning threshold and the error threshold for the reading quality
  - Configuration of the interface parameters
- *ALIGNMENT* (see chapter 9.3.3)
  - Display of the following values:
    Scan number, position, speed, quality, distance, number of labels in the scanning beam
  - Graphical displays of the following values:
    Position, speed, quality
- *DIAGNOSTICS* (see chapter 9.3.5)
  - Event logging of warnings and errors.
- *MAINTENANCE* (see chapter 9.3.6)
  - Firmware update
  - User management
  - Backup/Restore

9.3.2 *CONFIGURATION* function

NOTICE
Configuration changes only in the *Service* operating mode! ↳ Changes made using the *CONFIGURATION* function can only be performed in the *Service* operating mode.

Overview of the webConfig configuration functions

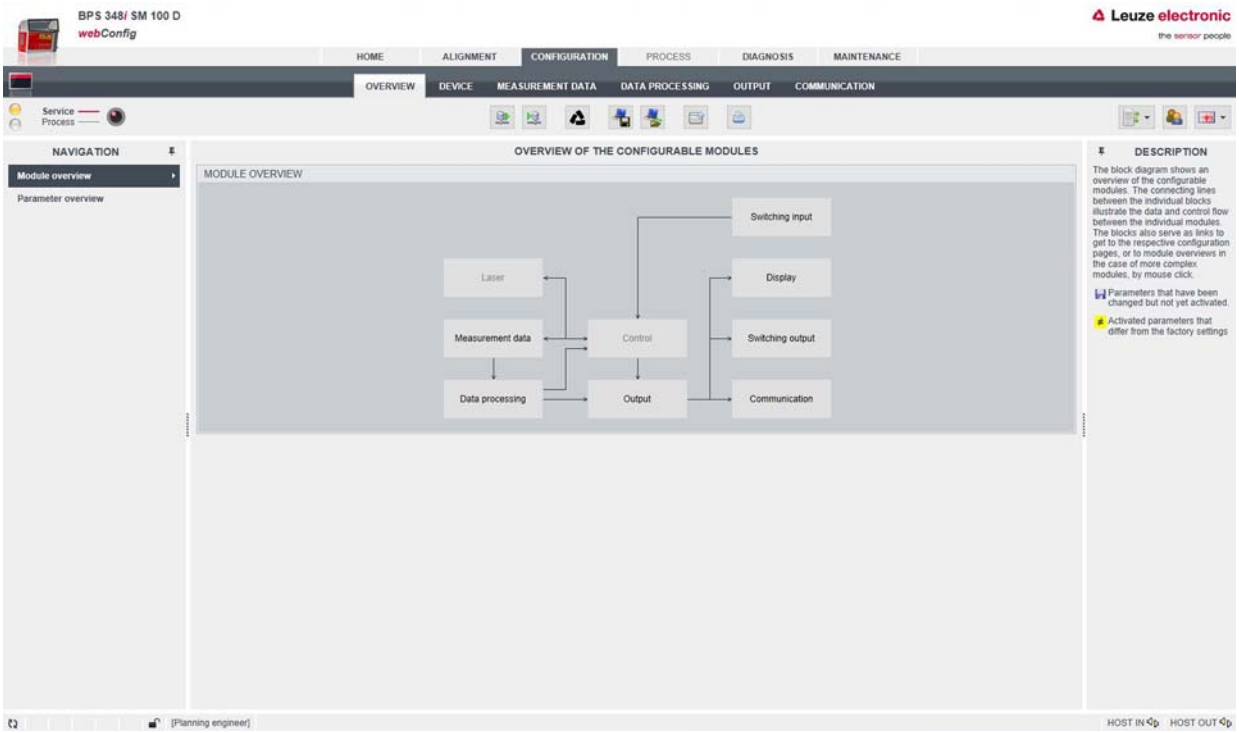

Figure 9.2: *CONFIGURATION* webConfig function

webConfig configuration parameters

*: PROFIBUS parameters, see chapter 8.5

**: Parameter can only be configured via webConfig

Configuration of the switching inputs/outputs (*DEVICE* tab)

- I/O mode: switching input or switching output *
- Output function *
- Function input *
- Timing functions
  - Signal delay **
  - Pulse duration **
  - Switch-on/switch-off delay **
  - Debounce time **
  - Inversion yes/no *

NOTICE
Start-up configuration of the switching inputs and outputs!
↳ The configuration for switching inputs and outputs SWIO 1 and SWIO 2 is generally performed via the GSD file. The settings configured with the webConfig tool that differ from the GSD configuration are overwritten on start-up by the PROFIBUS master with the settings made via the GSD file. Settings that cannot be configured via PROFIBUS, e.g., timing functions, are not overwritten. ↳ The PROFIBUS modules 4 and 5 configure switching inputs and outputs (I/Os) SWIO 1 and SWIO 2 (see chapter 8.5.6 and see chapter 8.5.7), e.g. whether SWIO 1 and SWIO 2 operate as input or output which events act on the output the function of the input

Timing functions of the switching inputs/outputs

The timing functions (e.g., start-up delay) can **only** be configured with the webConfig tool.
The configuration of the timing functions is not overwritten by the PROFIBUS master on start-up.

- Start-up delay
  With this setting, the output pulse is delayed by the specified time (in ms).
- Switch-on time
  Defines the switch-on time period for the switching input. Any activated switch-off function then no longer has any function.
  If the output is deactivated via the switch-off signal before the start-up delay lapses, only a brief pulse appears at the output following the start-up delay.

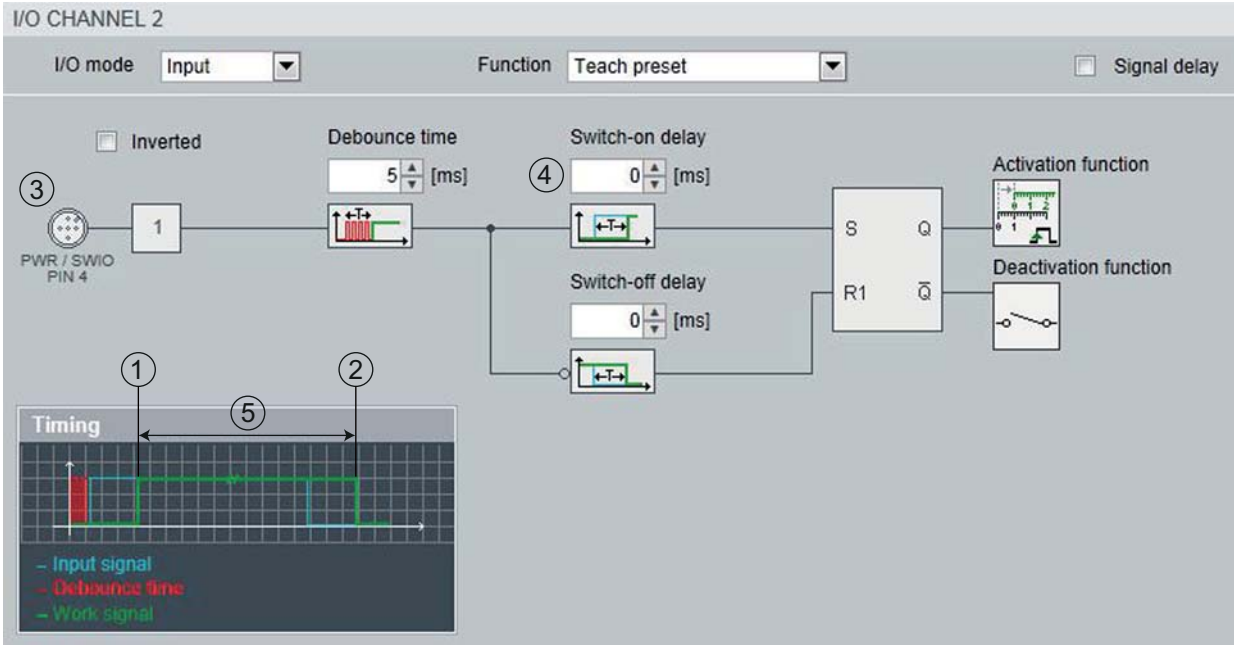

1	Start-up signal
2	Switch-off signal
3	Output
4	Start-up delay
5	Switch-on time

Figure 9.3: Start-up delay > 0 and switch-on time > 0

- Debounce time
  Parameter for setting the software debounce time for the switching input. The definition of a debounce time extends the signal transition time accordingly.
  If this parameter has the value *0*, no debouncing takes place. Otherwise, the set value corresponds to the time (in ms) that the input signal must be present and stable.
- Switch-off delay
  This parameter specifies the duration of the switch-off delay (in ms).

Configuration of the bar code tape selection and tape value correction (*MEASUREMENT DATA* tab, *Bar code tape*)

- Bar code tape with 30 mm grid or 40 mm grid *
  Tape value correction **

Configuration of position detection (*DATA PROCESSING* tab, *Position > Detection*)

Integration depth *
Scaling free resolution *
Preset *
Offset *
Error handling procedures *

Configuration of position monitoring (*DATA PROCESSING* tab, *Position > Monitoring*)

Position limit value 1/2 *

Configuration of speed detection (*DATA PROCESSING* tab, *Speed* > *Detection*)

Speed measurement averaging *
Scaling free resolution *
Error handling procedures *

Configuration of speed monitoring (*DATA PROCESSING* tab, *Measurement data* > *Speed* > *Monitoring*)

Speed limit value 1-4 *

Configuration of the measurement value display (*DATA PROCESSING* tab, *General preparation*)

- Unit *

Unit of measurement: metric or inch

- Count direction *
  Output mode sign *

Configuration of monitoring of the reading quality (*DATA PROCESSING* tab, *Reading quality*)

- Warning threshold for reading quality in %**
- Error threshold for reading quality in % **

Configuration of the data output (*DATA PROCESSING* tab, *Output*, *Preparation*)

- Position resolution *
- Speed resolution *

Configuration of the communication data (*COMMUNICATION* tab)

- Configuration of the SERVICE USB interface

The set PROFIBUS address is not displayed here.

9.3.3 *ALIGNMENT* function

NOTICE
ALIGNMENT function only in the *Service* operating mode! ↳ The BPS can only be aligned using the *ALIGNMENT* function in the *Service* operating mode.

The *ALIGNMENT* function serves to simplify mounting and alignment of the BPS. The laser is to be activated via the Start icon so that the function can monitor and directly display the measurement values for position and speed and determine the optimum installation location.

In addition, reading quality (in %), working distance and the number of labels in the scanning beam can be displayed. Using this information, it is possible to assess how well the BPS is aligned with the BCB.

During output of the read results, the BPS is controlled by the webConfig tool.

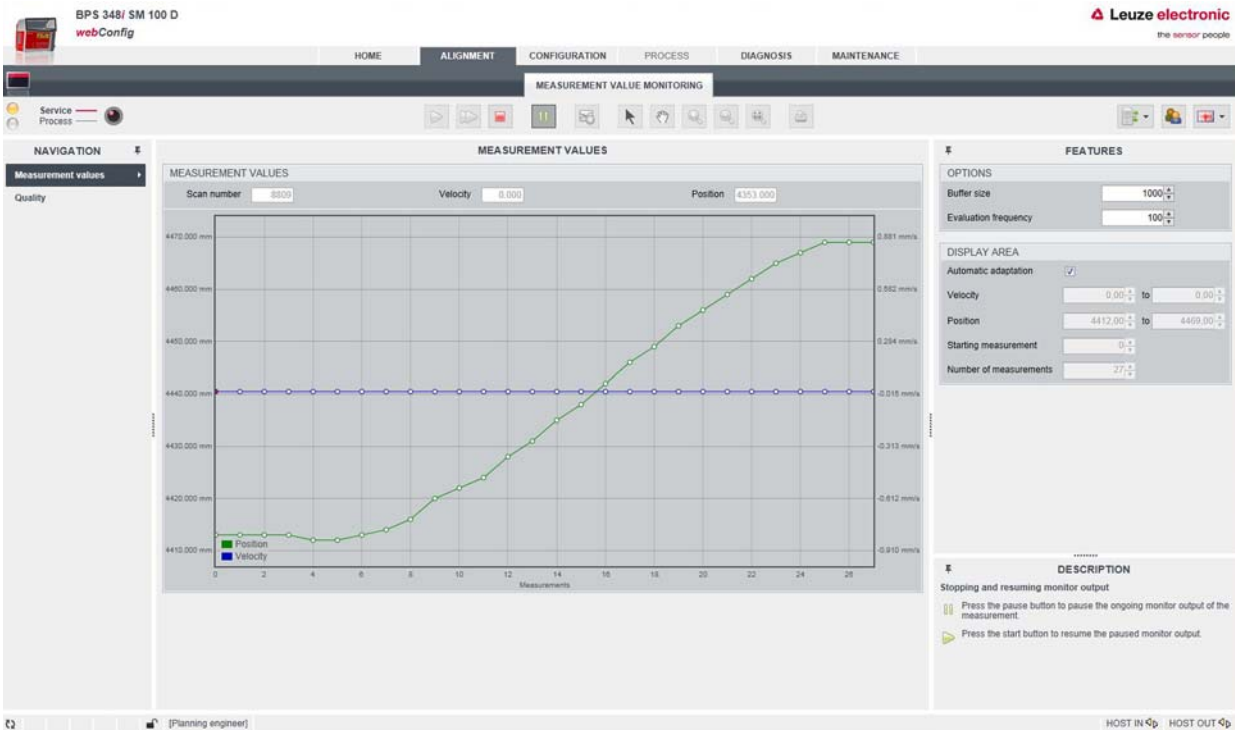

Figure 9.4: *ALIGNMENT* webConfig function

9.3.4 *PROCESS* function

The *PROCESS* function serves to control the current measurement data in the *Process* operating mode. The measurement results are output in tabular form – strictly as monitor output.
The **Pause/Start** icon can be used to interrupt and resume monitor recording.

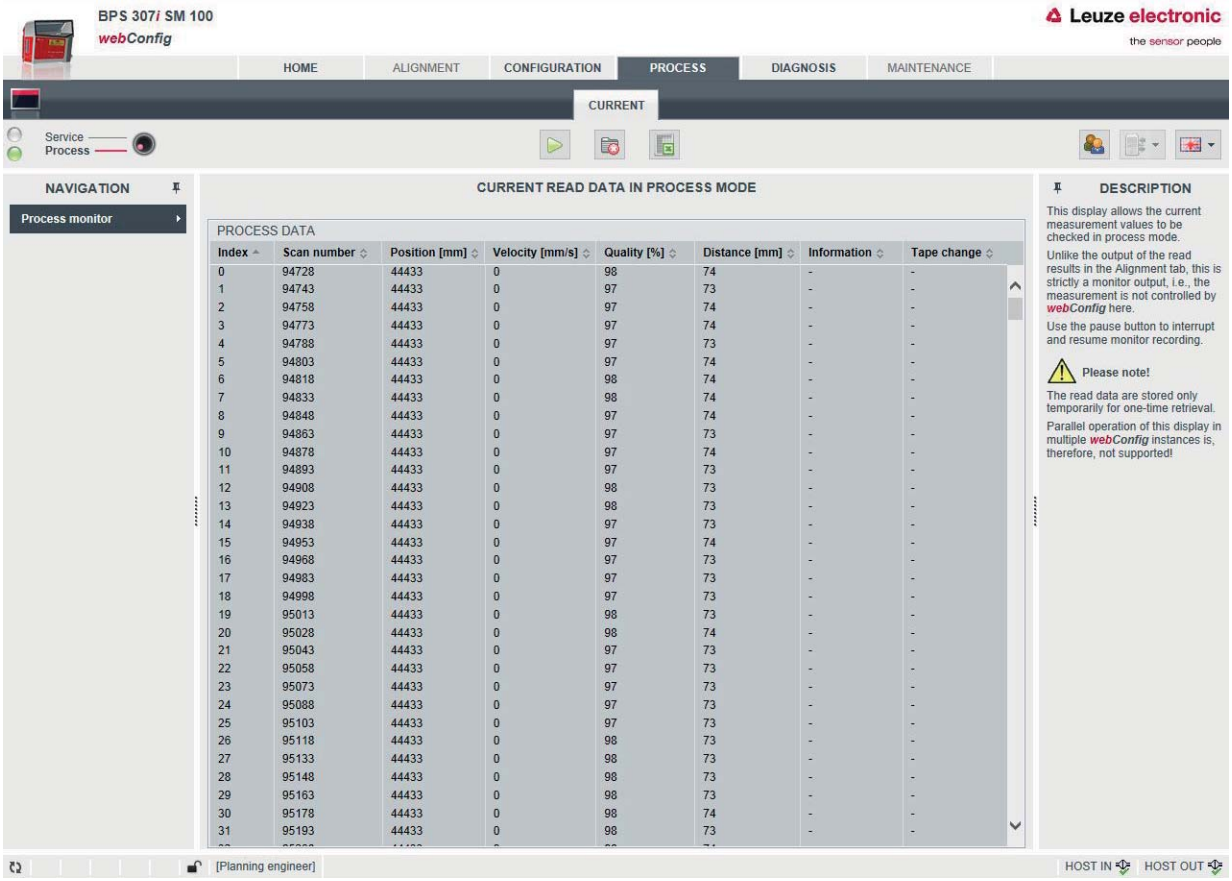

Index	Scan number	Position [mm]	Velocity [mm/s]	Quality [%]	Distance [mm]	Information	Tape change
0	94728	44433	0	98	74	-	-
1	94743	44433	0	97	73	-	-
2	94758	44433	0	97	74	-	-
3	94773	44433	0	97	74	-	-
4	94788	44433	0	97	73	-	-
5	94803	44433	0	97	74	-	-
6	94818	44433	0	98	74	-	-
7	94833	44433	0	98	74	-	-
8	94848	44433	0	97	74	-	-
9	94863	44433	0	97	73	-	-
10	94878	44433	0	97	74	-	-
11	94893	44433	0	97	73	-	-
12	94908	44433	0	98	73	-	-
13	94923	44433	0	98	73	-	-
14	94938	44433	0	97	73	-	-
15	94953	44433	0	97	74	-	-
16	94968	44433	0	97	73	-	-
17	94983	44433	0	97	73	-	-
18	94998	44433	0	97	73	-	-
19	95013	44433	0	98	73	-	-
20	95028	44433	0	98	74	-	-
21	95043	44433	0	97	73	-	-
22	95058	44433	0	97	73	-	-
23	95073	44433	0	97	73	-	-
24	95088	44433	0	97	73	-	-
25	95103	44433	0	97	73	-	-
26	95118	44433	0	98	73	-	-
27	95133	44433	0	98	73	-	-
28	95148	44433	0	98	73	-	-
29	95163	44433	0	98	73	-	-
30	95178	44433	0	98	74	-	-
31	95193	44433	0	98	73	-	-

Figure 9.5: *PROCESS* webConfig function

9.3.5 *DIAGNOSTICS* function

The *DIAGNOSTICS* function is available in the *Process* and *Service* operating modes.
The device event log is displayed with the *DIAGNOSTICS* function.

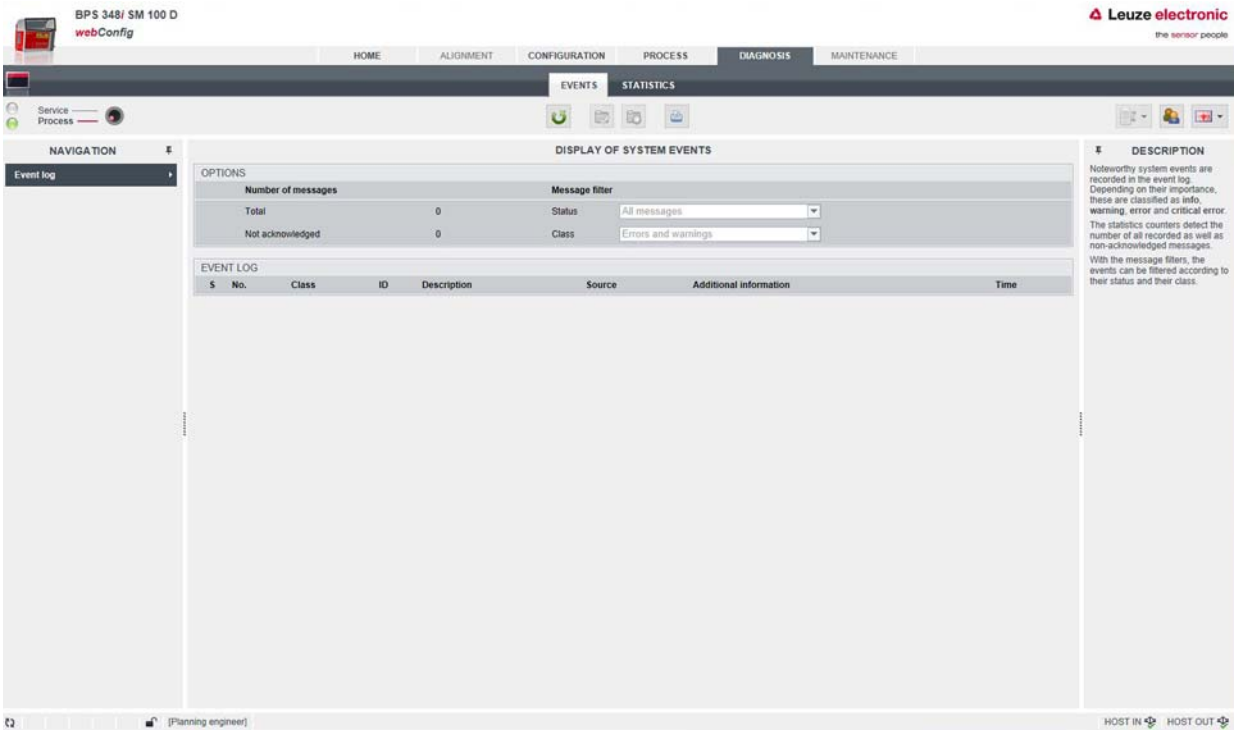

Figure 9.6: *DIAGNOSTICS* webConfig function

9.3.6 *MAINTENANCE* function

The *MAINTENANCE* function is only available in the *Service* operating mode.

Functionalities:

- User management
- Devices Backup/Restore
- Firmware update
- System clock
- Settings of the user interface

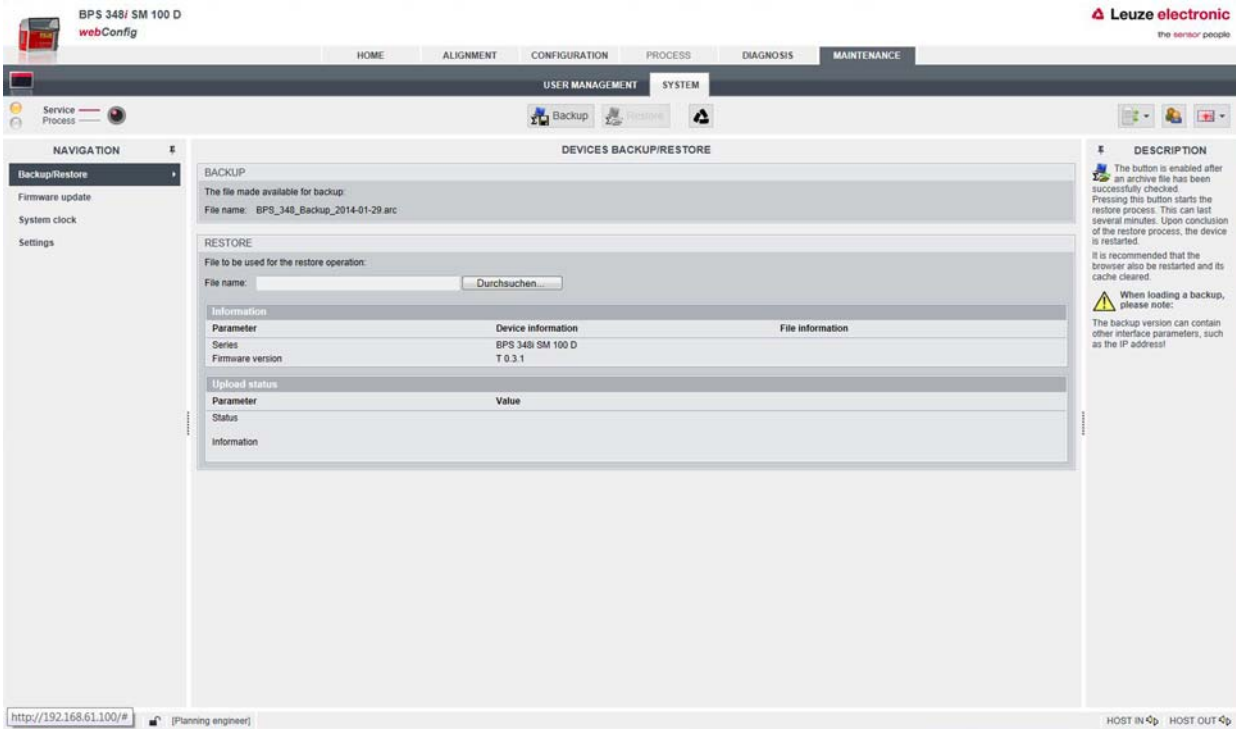

Figure 9.7: *MAINTENANCE* webConfig function

10 Diagnostics and troubleshooting

10.1 What to do in case of failure?

After switching on the BPS, display elements (see chapter 3.3) assist in checking the proper function and troubleshooting.

In case of error, you can determine the error from the LED displays. With the error message you can determine the cause of the error and initiate measures to rectify it.

- Switch off the system and leave it switched off.
- Analyze the cause of the error using the operation indicators, the error messages and the diagnostic tools (also with the help of the webConfig tool, *DIAGNOSTICS* tab) and rectify the error.

NOTICE
Contact Leuze electronic subsidiary/customer service.
If you are unable to rectify a fault, contact the Leuze electronic branch responsible for you or call the Leuze electronic customer service (see chapter 12 "Service and support").

10.1.1 Diagnostics with webConfig tool

System events are displayed in the webConfig tool via the *DIAGNOSTICS* tab. Noteworthy system events are recorded in the event log. Depending on their importance, the events are classified as info, warning, error and critical error. The statistics counters detect the number of all recorded as well as non-acknowledged messages. With the message filters, the events can be filtered according to their status and their class.

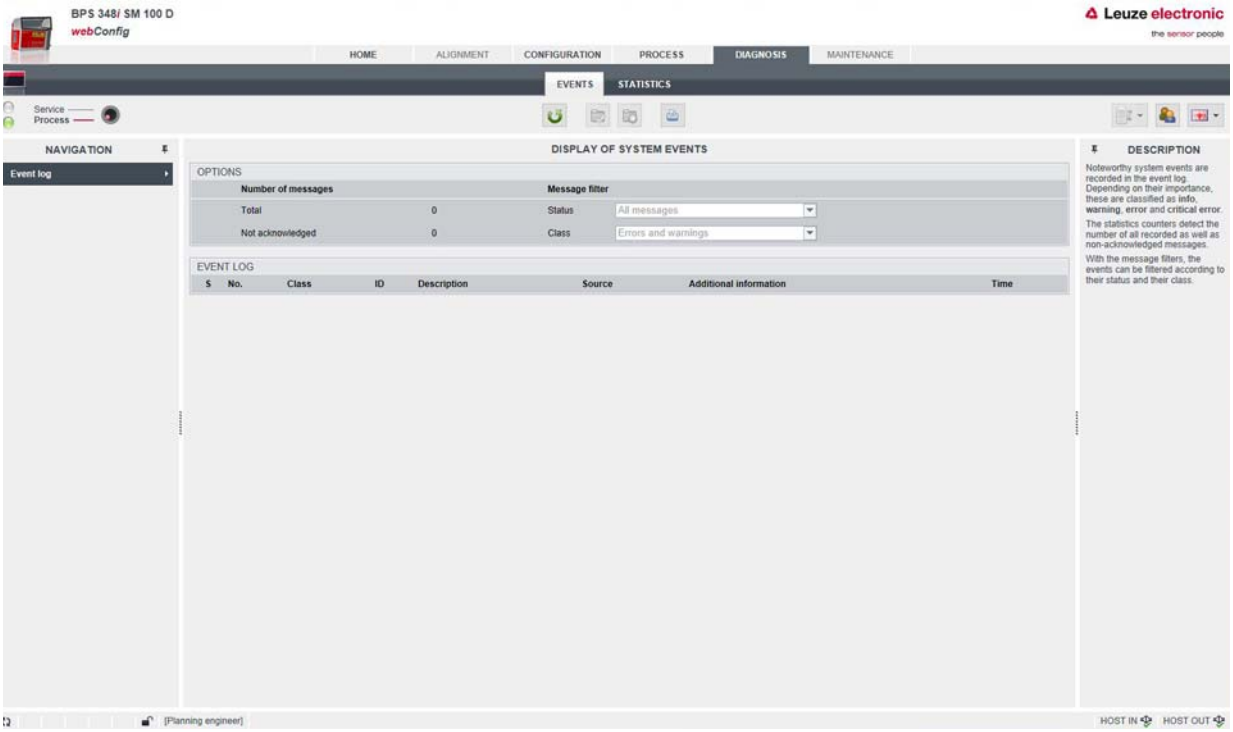

Figure 10.1: *DIAGNOSTICS* webConfig function

10.2 Operating indicators of the LEDs

You can ascertain general causes of errors via the PWR and BUS status LEDs (see table 10.4).

Table 10.1: PWR LED displays – causes and measures

Error	Possible cause	Measures
Off	• No supply voltage connected to the device • Hardware error	• Check supply voltage • Contact Leuze electronic customer service (see chapter 12 "Service and support")
Red, flashing	• No bar code in the scanning beam • No valid measurement value	• Query BCB diagnostic data and carry out the resulting measures (see table 10.5)
Red, continuous light	• Error • Device function is limited • Internal device error	• Determine the cause of the device error using the event log of the webConfig diagnostics • Contact Leuze electronic customer service (see chapter 12 "Service and support")
Orange, continuous light	• Device in *Service* mode	• Reset the device to *Process* mode using the webConfig tool

10.3 Error messages on the display

Via the optional display of the BPS, the device outputs the following possible error status information while it has the *BPS Info* device status:

- *System OK*
  BPS operating error-free.
- *Warning*
  Warning message. Query device status using PROFIBUS module 6.
- *Error*
  Device function is not ensured.

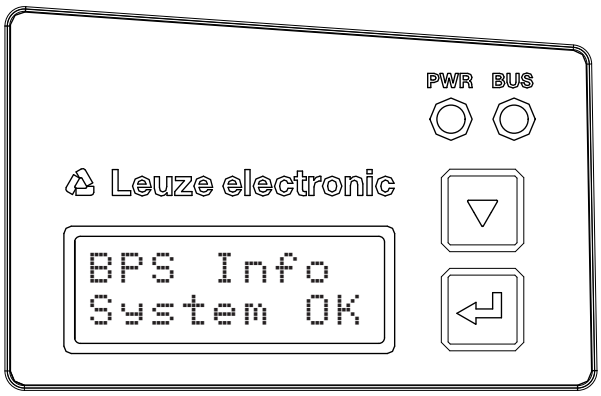

Figure 10.2: Example: Device status/error status information on the display

10.4 Checklist for causes of errors

Table 10.2: Service interface errors – causes and measures

Error	Possible cause	Measures
webConfig does not start	• Incorrectly connected interconnection cable • Connected BPS is not recognized • No communication via USB service interface • Old webConfig configuration in the browser cache	• Check interconnection cable • Install USB driver • Clear browser history

Table 10.3: Process interface errors – causes and measures

Error	Possible cause	Measures
Sporadic network errors	• Check wiring for proper contacting	Check wiring: • Check wire shielding • Check wires used
	• EMC coupling	• Observe contact quality of screwed or soldered contacts in the wiring • Avoid EMC coupling caused by power cables laid parallel to device lines • Separate laying of power and data communications cables
	• Network expansion exceeded	• Check max. network expansion as a function of the max. cable lengths

Table 10.4: LED indicators - interface errors – causes and measures

Error	Possible cause	Measures
BUS LED “Off”	• No supply voltage connected to the device	• Check supply voltage
	• Device not yet recognized by the PROFIBUS	• Check device address
	• Hardware error	• Send device to customer service
BUS LED “red flashing”	• Incorrect wiring	• Check wiring
	• Communication error: Configuration failed • Master: no data exchange	• Check configuration, in particular with respect to address assignment • Carry out a reset on the control
	• Communication error on the PROFIBUS: No communication established to master	• Check protocol settings • Check configuration, in particular with respect to address assignment
	• Wrong device address set	• Check configuration, in particular with respect to address assignment
	• Incorrect configuration	• Check configuration, in particular with respect to address assignment
	• Different protocol settings	• Check protocol settings

Table 10.5: Position measurement errors – causes and measures

Error	Possible cause	Measures
Measurement value or reading quality is continuously instable	• Soiling of the BPS optics	• Clean the optics of the BPS
Measurement value or reading quality is poor • at certain position values • always at the same position values	• Soiling of the bar code tape	• Clean the bar code tape • Replace the bar code tape
No measurement value can be determined	• No code in scanning beam • Code not in the working range of the BPS	• Align the scanning beam with the bar code tape • Align the BPS with the bar code tape (working range 50 mm … 170 mm)
Faulty measurement value	• Wrong bar code tape BCB grid different from BPS configuration	• Change BPS configuration to the bar code tape that is being used

11 Care, maintenance and disposal

11.1 Cleaning

If there is dust on the BPS device:

↳ Clean the BPS device with a soft cloth; use a cleaning agent (commercially available glass cleaner) if necessary.

NOTICE
Do not use aggressive cleaning agents!
↳ Do not use aggressive cleaning agents such as thinner or acetone for cleaning the BPS device. Use of improper cleaning agents can damage the lens cover.

11.2 Servicing

The BPS does not normally require any maintenance by the operator.

Repairs to the device must only be carried out by the manufacturer.

↳ For repairs, contact your responsible Leuze electronic subsidiary or Leuze electronic customer service (see chapter 12 "Service and support").

11.2.1 Firmware update

A firmware update can only be performed by Leuze electronic Service on-site or at the company headquarters.

↳ For firmware updates, contact your responsible Leuze electronic subsidiary or Leuze electronic customer service (see chapter 12).

11.2.2 BCB repair with repair kit

NOTICE
Do not use the BCB repair kit on a permanent basis!
↳ Use the bar code tape created with the repair kit only temporarily as an emergency solution. The optical and mechanical properties of the self-printed bar code tape do not correspond to those of the original bar code tape. Self-printed bar code tape should not remain in the system on a permanent basis. ↳ Repair bar code tapes in lengths of 1 m can be ordered from **Leuze electronic** on request.

If a bar code tape was damaged, e.g., by falling parts, you can download a repair kit for the BCB from the Internet.

www.leuze.com > Products > Measuring Sensors > Sensors for Positioning > BPS 300i > (Name of the BPS) > Tab Downloads > Repair kit.

In the repair kit files, you will find all position values with 30 mm grid and 40 mm grid.

Layout:

- BCB8: 0.9 m of bar code tape is provided on each A4 sheet.
  Five lines of 18 cm with six code-information segments of 30 mm each
  Tape lengths: 0 … 500 m, 500 … 1000 m, 1000 … 1500 m … 2500 … 3000 m
- BCB: 1 m of bar code tape is provided on each A4 sheet.
  Five lines of 20 cm with five code-information sections of 40 mm each
  Tape lengths: 0 … 500 m, 500 … 1000 m, 1000 … 1500 m and 1500 … 2000 m

Replacing a section of defective bar code tape

↳ Determine the coding of the defective area.

↳ Print out the coding for the given area.

↳ Affix the printed code over the defective section of bar code tape.

NOTICE
Printing coding
↳ Select only those pages that are actually required.
↳ Change the printer settings so that the bar code is not distorted.
↳ Check the print results and measure the distance between two bar codes (see figure 11.1 and see figure 11.2): BCB: 40 mm BCB8: 30 mm
↳ Cut the code strips and arrange them next to one another. The code content must always increase or decrease in increments of 30 mm or 40 mm. Check that the printed values increase by 3 or 4.

Figure 11.1: Checking the print results of the BCB repair kit (40 mm grid)

Figure 11.2: Checking the print results of the BCB8 repair kit (30 mm grid)

11.3 Disposing

↳ For disposal observe the applicable national regulations regarding electronic components.

12 Service and support

24-hour on-call service at:
+49 (0) 7021 573 - 0

Service hotline:
+49 (0) 7021 573 - 123
Monday to Friday 8.00 a.m. to 5.00 p.m. (UTC+1)

E-mail:
service.identify@leuze.de

Repair service and returns:
Procedure and Internet form can be found at
www.leuze.com/repair
Return address for repairs:
Service center
Leuze electronic GmbH + Co. KG
In der Braike 1
D-73277 Owen / Germany

12.1 What to do should servicing be required?

NOTICE
Please use this chapter as a master copy if service is required! ↳ Enter the contact information and fax the form together with your service order to the fax number given below.

Customer data (please complete)

Device type:	
Serial number:	
Firmware:	
Display messages:	
Status of LEDs:	
Error description:	
Company:	
Contact person/department:	
Phone (direct dial):	
Fax:	
Street/No:	
ZIP code/City:	
Country:	

Leuze Service fax number:
+49 7021 573 - 199

13 Technical data

13.1 General specifications

Table 13.1: Optics

Light source	Laser diode
Wavelength	655 nm
Life expectancy laser diode	100,000 h (typ. at +25 °C)
Beam deflection	Via rotating polygon wheel
Exit window	Glass
Laser class	2 acc. to IEC 60825-1:2007 (EN 60825-1:2008-05); II acc. to CDRH (U.S. 21 CFR 1040.10 with deviations corresponding to "Laser Notice No. 50" from June 24, 2007)
Working range	50 mm … 170 mm At a reading distance of 50 mm, the reading field width is 120 mm. At a reading distance beyond 100 mm, the reading field width is 160 mm (see figure 13.1, BPS reading field curve).

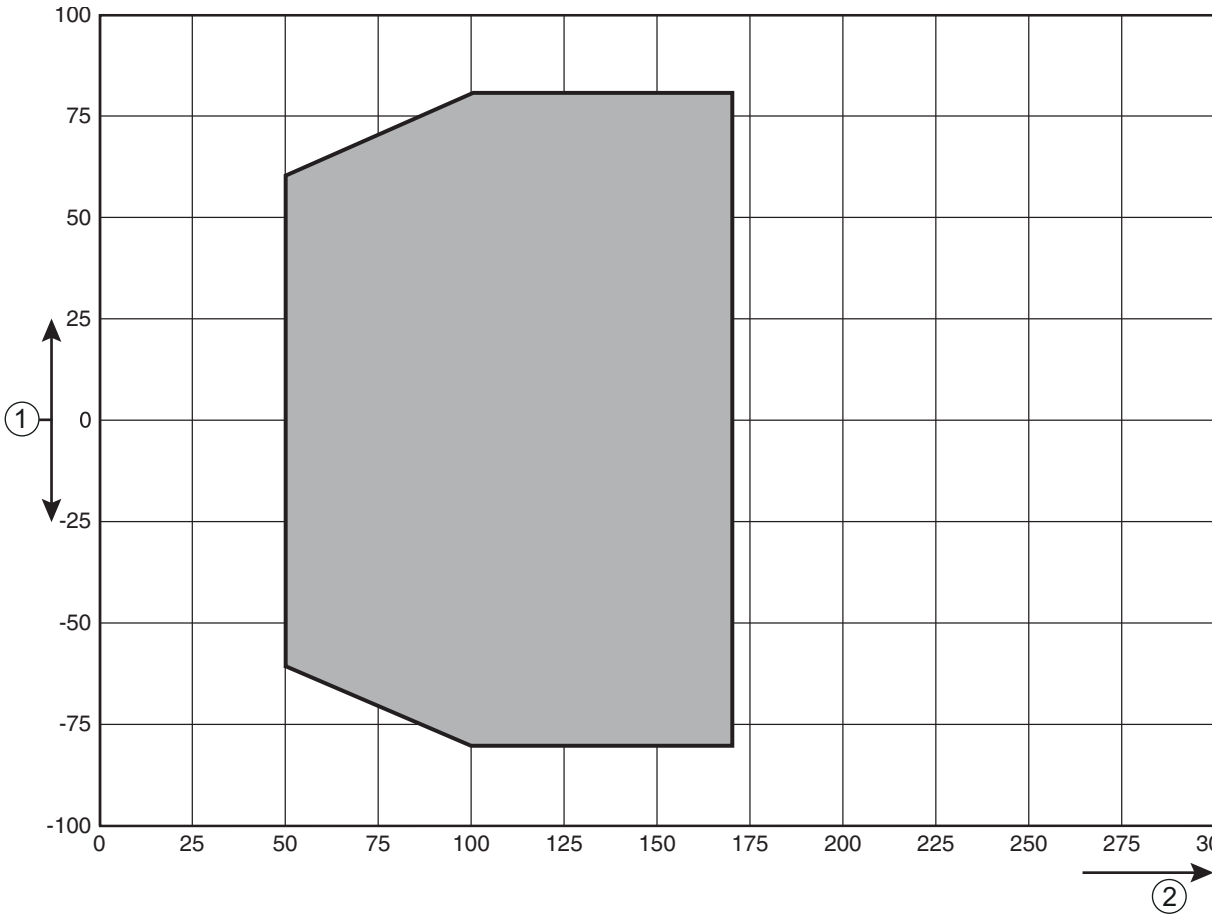

1 Reading field width [mm]
2 Reading distance [mm]

Figure 13.1: BPS reading field curve

Table 13.2: Measurement data

Reproducibility (3 sigma)	±0.15 mm
Response time	8 ms
Output time	1 ms
Basis for contouring error calculation	4 ms
Measurement range	0 … 10,000,000 mm
Max. traverse rate	10 m/s

Table 13.3: Operating and display elements

Display	Monochromatic graphical display, 128 x 32 pixels, With background lighting
Keyboard	Two buttons
LEDs	Two LEDs for power (PWR) and bus state (BUS), two-colored (red/green)

Table 13.4: Mechanical data

Housing	Diecast aluminum
Connection technology	• BPS with MS 304: M12 connectors • BPS with MK 304: Terminal blocks with spring-cage terminals (5-pin)
Degree of protection	IP 65
Weight	Approx. 580 g (without connection hood)
Dimensions (without connection hood)	(H x W x D) 108.7 mm x 100.0 mm x 48.3 mm
Dimensions (with MS 304 connection hood)	(H x W x D) 108.7 mm x 100.0 mm x 48.3 mm
Dimensions (with MK 304 connection hood)	(H x W x D) 147.4 mm x 100.0 mm x 48.3 mm
Dimensions of MS 304 connection hood	(H x W x D) 64.0 mm x 43.5 mm x 33.5 mm
Dimensions of MK 304 connection hood	(H x W x D) 64.0 mm x 43.5 mm x 83.5 mm

Table 13.5: Environmental data

Air humidity	Max. 90% rel. humidity, non-condensing
Vibration	IEC 60068-2-6, test Fc
Shock Continuous shock	IEC 60068-2-27, test Ea
Electromagnetic compatibility	IEC 61000-6-3 IEC 61000-6-2 (contains IEC 61000-4-2, -3, -4, -5, -6)

Table 13.6: Certifications, conformity

Conformity	CE, CDRH
Certifications	UL 60950-1, CSA C 22.2 No. 60950-1

⚠ CAUTION
UL applications! ↳ For UL applications, use is only permitted in Class 2 circuits in accordance with the NEC (National Electric Code).

13.1.1 BPS without heating

⚠ CAUTION
UL applications! ↳ For UL applications, use is only permitted in Class 2 circuits in accordance with the NEC (National Electric Code).

Table 13.7: Electrical equipment

Interface type	PROFIBUS DP-V0 acc. to IEC 61158, automatic baud rate detection up to 12 Mbit/s
Service USB interface	Mini-B type USB 2.0 socket
Switching input / switching output	Two switching inputs/outputs Functions are freely programmable via PROFIBUS interface Switching input: 18 … 30 VDC depending on supply voltage, I max. = 8 mA Switching output: 18 … 30 VDC, depending on supply voltage, I max. = 60 mA (short-circuit proof) Switching inputs/outputs protected against polarity reversal!
PWR LED green	Device ready (power on)
Operating voltage U_B	18 … 30 VDC (Class 2, protection class III)
Power consumption	Max. 3.7 W

Table 13.8: Ambient temperature

Ambient temperature (operation)	-5 °C … +50 °C
Ambient temperature (storage)	-35 °C … +70 °C

13.1.2 BPS with heating

⚠ CAUTION
UL applications! ↳ For UL applications, use is only permitted in Class 2 circuits in accordance with the NEC (National Electric Code).

Table 13.9: Electrical equipment

Operating voltage U_B	18 … 30 VDC
Power consumption	Max. 17.7 W

Structure of the heating	Housing heating and separate heating of the optics glass
Warmup time	Minimum 30 min at +24 VDC and an ambient temperature of -35 °C
Minimum conductor cross section	Conductor cross section of at least 0.75 mm² for the supply voltage supply line. **Note:** Wiring through of the voltage supply to multiple heating devices is not permissible. Standard, M12 ready-made cable not usable (insufficient conductor cross section).

Table 13.10: Ambient temperature

Ambient temperature (operation)	-35 °C … +50 °C
Ambient temperature (storage)	-35 °C … +70 °C

13.2 Bar code tape

Table 13.11: BCB dimensions

	BCB	BCB8
Grid	40 mm	30 mm
Standard height	47 mm	47 mm
Preferred heights	25 mm, Special heights for lengths greater than 150 m	25 mm, 30 mm, special heights for lengths greater than 150 m
Length	0 … 5m, 0 … 10m, 0 … 20m, …, 0 … 150m, 0 … 200m; Special lengths and special codings for lengths greater than 150 m (see chapter 14)	0 … 5 m, 0 … 10 m, 0 … 20 m, …, 0 … 150 m; Special lengths and special codings for lengths greater than 150 m (see chapter 14)
Tape tolerance	±1 mm per meter	±1 mm per meter

NOTICE
Twin tapes on request ↳ Twin tapes can be ordered on request (see chapter 14).

Table 13.12: BCB structure

Manufacturing process	Filmsetting
Surface protection	Polyester, matt
Base material	Polyester film, affixed without silicone

Adhesive	Acrylate adhesive
Strength of adhesive	0.1 mm
Adhesive strength (average values)	On aluminum: 25 N/25 mm On steel: 25 N/25 mm On polycarbonate: 22 N/25 mm On polypropylene: 20 N/25 mm

Table 13.13: BCB environmental data

Recommended processing temperature	0 °C … +45 °C
Ambient temperature	-40 °C … +120 °C
Dimensional stability	No shrinkage, tested according to DIN 30646
Curing	Final curing after 72 h; the BPS can detect the position immediately after the BCB is affixed.
Tear resistance	150 N
Elongation at tear	Min. 80%, tested in accordance with DIN 50014, DIN 51220
Weathering resistance	UV-light, humidity, salt spray (150 h/5 %)
Chemical resistance (checked at 23 °C over 24 h)	Transformer oil, diesel oil, white spirit, heptane, ethylene glycol (1:1)
Behavior in fire	Self-extinguishing after 15 s, does not drip
Surface	Grease-free, dry, clean, smooth
Mechanical properties	Scratch and wipe resistant, UV resistant, moisture resistant, partly chemical resistant

13.3 Dimensioned drawings

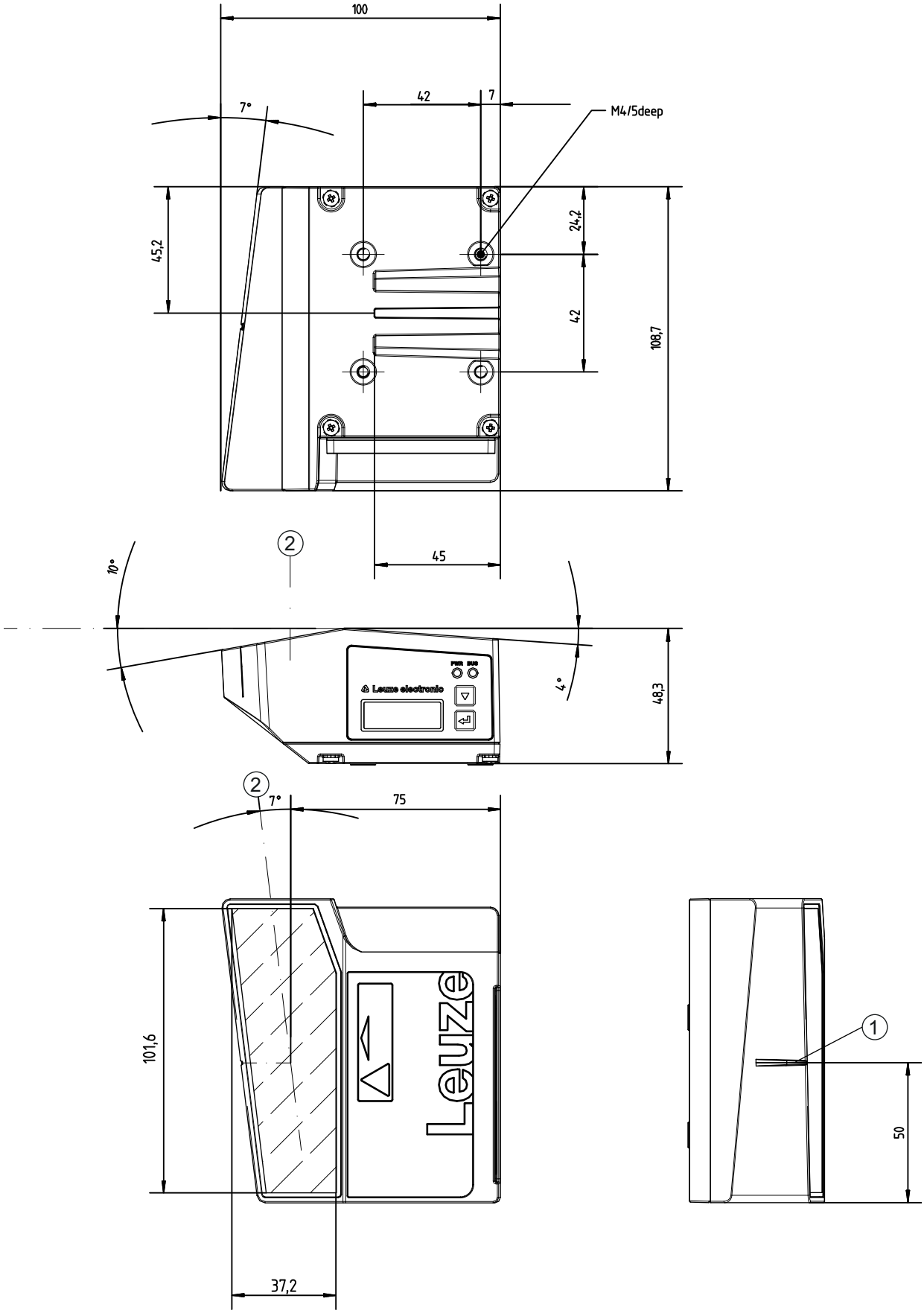

all dimensions in mm
1 Reference point for the bar code position
2 Optical axis

Figure 13.2: Dimensioned drawing BPS without connection hood

Dimensioned drawing BPS with MS 348 connection hood

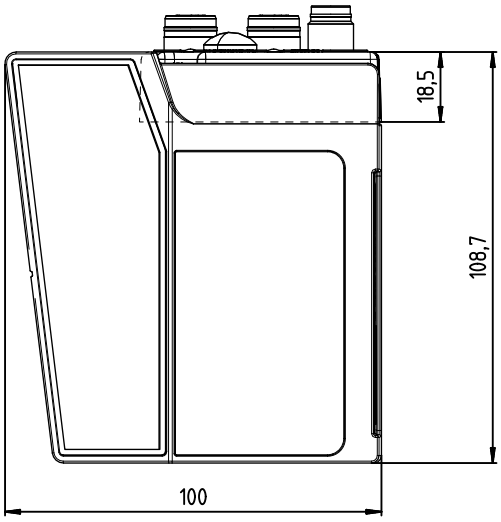

all dimensions in mm

Dimensioned drawing BPS with MS 304 connection hood

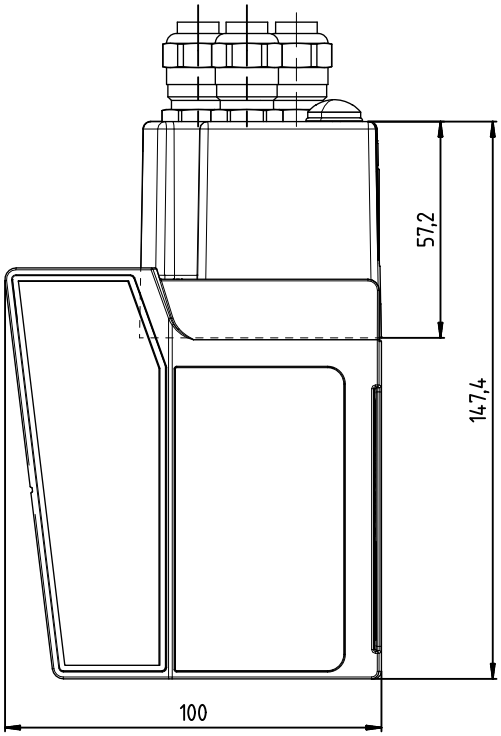

all dimensions in mm

Figure 13.3: Dimensioned drawing BPS with MK 304 connection hood

13.4 Dimensioned drawings: Accessories

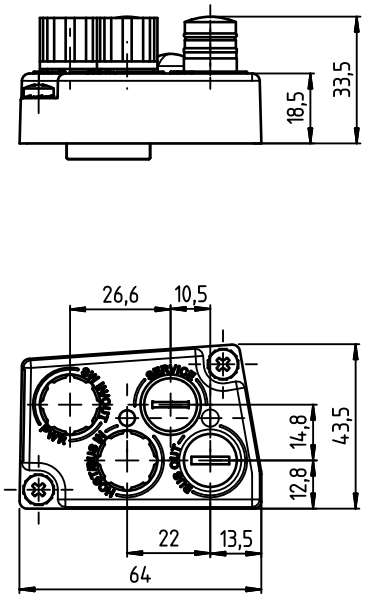

all dimensions in mm

Figure 13.4: Dimensioned drawing MS 304 connection hood

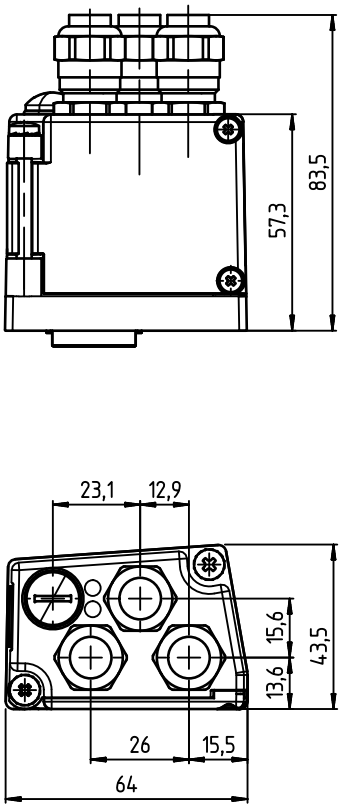

all dimensions in mm

Figure 13.5: Dimensioned drawing MK 304 connection hood

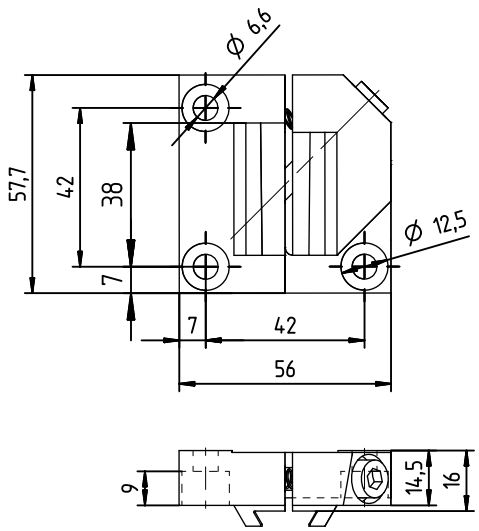

all dimensions in mm

Figure 13.6: Dimensioned drawing BTU 0300M-W mounting device

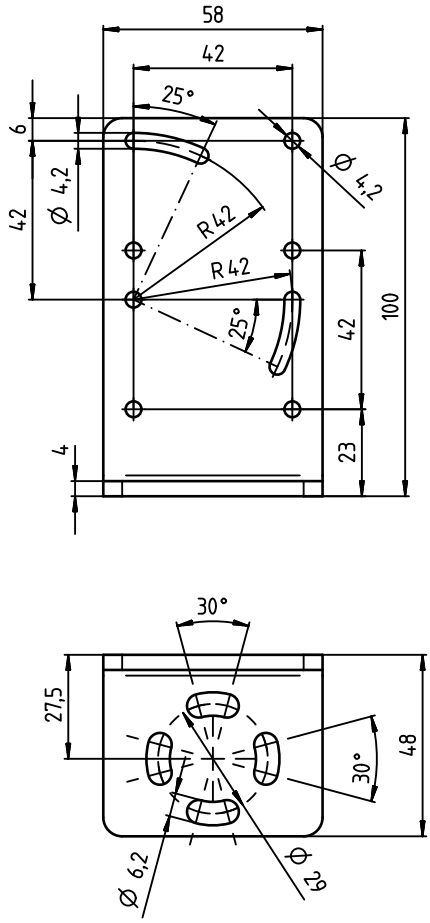

all dimensions in mm

Figure 13.7: Dimensioned drawing BT 300-W mounting bracket

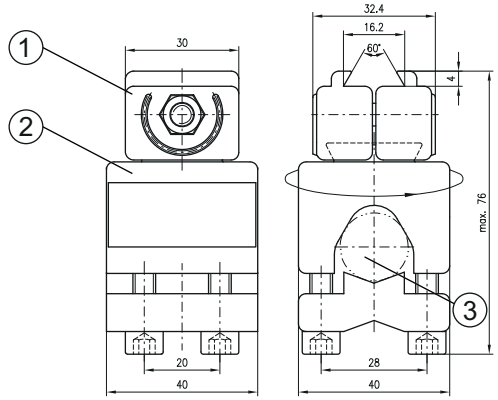

all dimensions in mm

1 Clamping jaws for mounting on the BPS
2 Clamp profile for fastening to round or oval pipes (¬ 16 … 20 mm)
3 Rod holder, turnable 360 °

Figure 13.8: Dimensioned drawing BT 56 mounting device

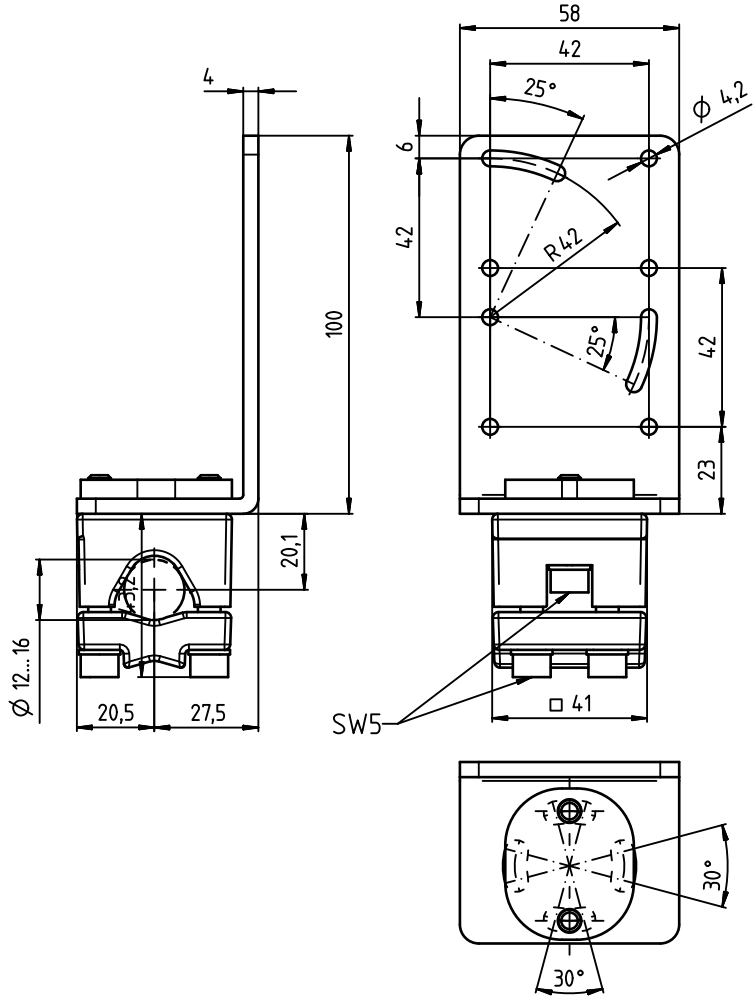

all dimensions in mm

Figure 13.9: Dimensioned drawing BT 300-1 mounting device

13.5 Dimensioned drawing bar code tape

Figure 13.10: Dimensioned drawing bar code tape BCB with 40 mm grid

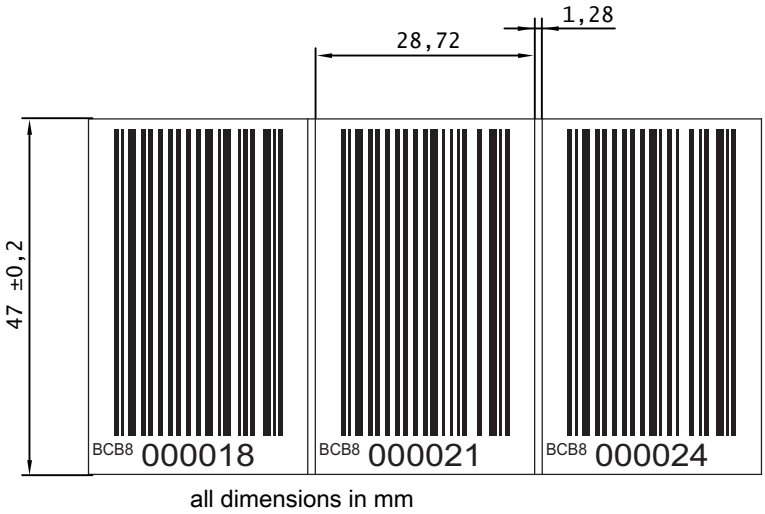

Figure 13.11: Dimensioned drawing bar code tape BCB8 with 30 mm grid

14 Order guide and accessories

14.1 BPS 304i type overview

Table 14.1: BPS 304i type overview

Part no.	Part designation	Description
50125674	BPS 304i SM 100 D H	BPS with PROFIBUS DP interface, display and heating
50125675	BPS 304i SM 100 D	BPS with PROFIBUS DP interface and display
50125676	BPS 304i SM 100	BPS with PROFIBUS DP interface
50136335	BPS 304i SM 100 H	BPS with PROFIBUS DP interface and heating

14.2 Connection hoods

Table 14.2: BPS connection hoods

Part no.	Part designation	Description
50116465	MK 304	Connection hood with spring-cage terminals
50116470	MS 304	Connection hood with M12 connectors

14.3 Accessory terminating resistor

Table 14.3: Accessories – terminating resistor

Part no.	Part designation	Description
50038539	TS 02-4-SA M12	M12 connector with integrated terminating resistor for BUS OUT

14.4 Cables accessories

Table 14.4: Accessories – PWR connection cable (voltage supply)

Part no.	Part designation	Description
50104557	K-D M12A-5P-5m-PVC	PWR connection cable, M12 socket for PWR, axial plug outlet, open cable end, cable length 5 m, not shielded
50104559	K-D M12A-5P-10m-PVC	PWR connection cable, M12 socket for PWR, axial plug outlet, open cable end, cable length 10 m, not shielded

Table 14.5: Accessories – BUS IN connection cable (open cable end)

Part no.	Part designation	Description
M12 plug for BUS IN, axial connector, open line end		
50104181	KB PB-2000-BA	BUS IN connection cable, length 2 m
50104180	KB PB-5000-BA	BUS IN connection cable, length 5 m

Part no.	Part designation	Description
50104179	KB PB-10000-BA	BUS IN connection cable, length 10 m
50104178	KB PB-15000-BA	BUS IN connection cable, length 15 m
50104175	KB PB-30000-BA	BUS IN connection cable, length 30 m

Table 14.6: Accessories – BUS OUT connection cable (open cable end)

Part no.	Part designation	Description
M12 plug for BUS OUT, axial connector, open cable end		
50104188	KB PB-2000-SA	BUS OUT connection cable, length 2 m
50104187	KB PB-5000-SA	BUS OUT connection cable, length 5 m
50104186	KB PB-10000-SA	BUS OUT connection cable, length 10 m
50104185	KB PB-15000-SA	BUS OUT connection cable, length 15 m
50104182	KB PB-30000-SA	BUS OUT connection cable, length 30 m

Table 14.7: Accessories – BUS OUT connection cable (M12 to M12)

Part no.	Part designation	Description
M12 plug + M12 socket, axial connectors		
50104096	KB PB-1000-SBA	BUS OUT connection cable, length 1 m
50104097	KB PB-2000-SBA	BUS OUT connection cable, length 2 m
50104098	KB PB-5000-SBA	BUS OUT connection cable, length 5 m
50104099	KB PB-10000-SBA	BUS OUT connection cable, length 10 m
50104100	KB PB-15000-SBA	BUS OUT connection cable, length 15 m
50104173	KB PB-30000-SBA	BUS OUT connection cable, length 30 m

14.5 Other accessories

Table 14.8: Accessories – BPS connectors

Part no.	Part designation	Description
50020501	KD 095-5A	M12 axial socket for voltage supply, shielded
50038538	KD 02-5-BA	M12 axial socket, B-coded, for HOST or BUS IN, shielded
50038537	KD 02-5-SA	M12 axial plug for BUS OUT, shielded

Table 14.9: Accessory USB cable

Part no.	Part designation	Description
50117011	KB USBA-USBminiB	USB service cable, 1 Type A and Mini-B type connector, length 1 m

Table 14.10: Mounting device accessories

Part no.	Part designation	Description
50124941	BTU 0300M-W	Mounting device for wall mounting – precise alignment of the BPS without adjustment (easy-mount).
50121433	BT 300 W	Mounting bracket for wall mounting
50027375	BT 56	Mounting device for rod
50121434	BT 300-1	Mounting device for rod

14.6 Bar code tapes

Table 14.11: Accessories – BCB

Part no.	Part designation	Description
50038895	BCB 005	Bar code tape, 5 m length, 47 mm high
50040041	BCB 010	Bar code tape, 10 m length, 47 mm high
50037489	BCB 020	Bar code tape, 20 m length, 47 mm high
50037491	BCB 030	Bar code tape, 30 m length, 47 mm high
50037492	BCB 040	Bar code tape, 40 m length, 47 mm high
50038894	BCB 050	Bar code tape, 50 m length, 47 mm high
50038893	BCB 060	Bar code tape, 60 m length, 47 mm high
50038892	BCB 070	Bar code tape, 70 m length, 47 mm high
50038891	BCB 080	Bar code tape, 80 m length, 47 mm high
50038890	BCB 090	Bar code tape, 90 m length, 47 mm high
50037493	BCB 100	Bar code tape, 100 m length, 47 mm high
50040042	BCB 110	Bar code tape, 110 m length, 47 mm high
50040043	BCB 120	Bar code tape, 120 m length, 47 mm high
50040044	BCB 130	Bar code tape, 130 m length, 47 mm high
50040045	BCB 140	Bar code tape, 140 m length, 47 mm high
50040046	BCB 150	Bar code tape, 150 m length, 47 mm high
50037494	BCB 200	Bar code tape, 200 m length, 47 mm high
50037495	BCB special length 47 mm height	Bar code tape with special length, 47 mm high
50102600	BCB special length 25 mm height	Bar code tape with special length, 25 mm high
50106979	BCB special length / height	Bar code tape with special length and height
50111786	BCB special length / height / winding	Bar code tape with special length, height and wrapping direction
50106478	MVS label 40 mm 10 pieces	MVS label, 40 mm grid; packaging unit: 10 pieces
50126134	MV0 label 40 mm 10 pieces	MV0 label, 40 mm grid; packaging unit: 10 pieces
50106473	Repair kit 40 mm	Repair kit, 40 mm grid

Table 14.12: Accessories – BCB8

Part no.	Part designation	Description
50104792	BCB8 010	Bar code tape, 10 m length, 47 mm high
50104793	BCB8 020	Bar code tape, 20 m length, 47 mm high
50104794	BCB8 030	Bar code tape, 30 m length, 47 mm high
50104795	BCB8 040	Bar code tape, 40 m length, 47 mm high
50104796	BCB8 050	Bar code tape, 50 m length, 47 mm high
50104797	BCB8 060	Bar code tape, 60 m length, 47 mm high
50104798	BCB8 070	Bar code tape, 70 m length, 47 mm high
50104799	BCB8 080	Bar code tape, 80 m length, 47 mm high
50104800	BCB8 090	Bar code tape, 90 m length, 47 mm high
50104801	BCB8 100	Bar code tape, 100 m length, 47 mm high
50104802	BCB8 110	Bar code tape, 110 m length, 47 mm high
50104803	BCB8 120	Bar code tape, 120 m length, 47 mm high
50104804	BCB8 130	Bar code tape, 130 m length, 47 mm high
50104805	BCB8 140	Bar code tape, 140 m length, 47 mm high
50104806	BCB8 150	Bar code tape, 150 m length, 47 mm high
50104807	BCB8 special length 47 mm height	Bar code tape with special length, 47 mm high
50104808	BCB8 special length 30 mm height	Bar code tape with special length, 30 mm high
50104809	BCB8 special length 25 mm height	Bar code tape with special length, 25 mm high
50106980	BCB8 special length / height	Bar code tape with special length and height
50106476	MVS label 30 mm 10 pieces	MVS label, 30 mm grid; packaging unit: 10 pieces
50126135	MV0 label 30 mm 10 pieces	MV0 label, 30 mm grid; packaging unit: 10 pieces
50106472	Repair kit 30 mm	Repair kit, 30 mm grid

Table 14.13: Accessories – twin tapes

Part no.	Part designation	Description
50120378	BCB twin tape special length / height	BCB twin tape, 40 mm grid, with special length and high; delivery contents: 2 bar code tapes with the same value range

Part no.	Part designation	Description
50120379	BCB8 twin tape special length / height	BCB8 twin tape, 30 mm grid, with special length and high; delivery contents: 2 bar code tapes with the same value range
50120380	BCB twin tape special length	BCB twin tape, 40 mm grid, 47 mm high; delivery contents: 2 bar code tapes with the same value range
50120381	BCB8 twin tape special length	BCB8 twin tape, 30 mm grid, 47 mm high; delivery contents: 2 bar code tapes with the same value range

15 EC Declaration of Conformity

The bar code positioning systems of the BPS 300 series have been developed and manufactured in accordance with the applicable European standards and directives.

The manufacturer of the product, **Leuze electronic GmbH + Co. KG** in D-73277 Owen, possesses a certified quality assurance system in accordance with ISO 9001.

16 Appendix

16.1 BCB bar code tape with 40 mm grid

Figure 16.1: Continuous, 40 mm grid

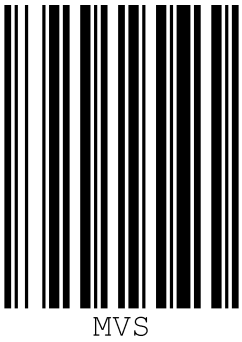

Figure 16.2: Single label MVS, 40 mm grid

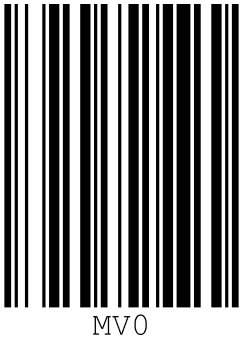

Figure 16.3: Single label MV0, 40 mm grid

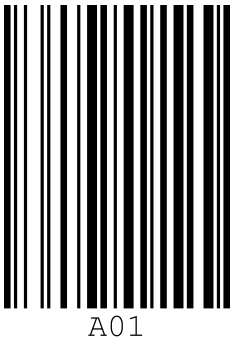

Figure 16.4: Single marker label, 40 mm grid

16.2 Bar code tape BCB8 with 30 mm grid

Figure 16.5: Continuous, 30 mm grid

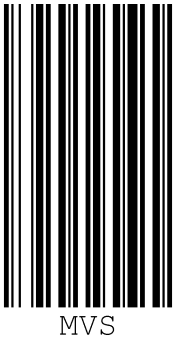

Figure 16.6: Single label MVS, 30 mm grid

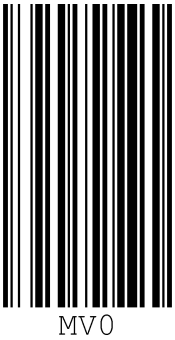

Figure 16.7: Single label MV0, 30 mm grid

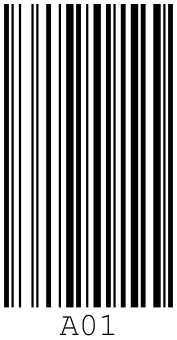

Figure 16.8: Single marker label, 30 mm grid