Leuze electronic

the sensor people

SMART
SENSOR
BUSINESS

AMS 307i

Optical Laser Measurement System – SSI

de 01-2017/09 50137614
We reserve the right to
make technical changes

Original operating instructions

ПРОМЭЛЕКТРОНИКА / sales@prom-elec.com

© 2017
Leuze electronic GmbH + Co. KG
In der Braike 1
D-73277 Owen / Germany
Phone: +49 7021 573-0
Fax: +49 7021 573-199
http://www.leuze.com
info@leuze.com

The main menus

```
AMS 307i 120
Leuze electronic
      GmbH & Co. KG
SW: V 1.3.0   HW:1
SN: ----------------------
```

Device information - main menu

This menu item contains detailed information on

- Device model,
- Manufacturer,
- Software and hardware version,
- Serial number.

No entries can be made via the display.

```
IO1 LSR PLB
IO2 TMP ATT
ERR                SSI
  + 87.000m
```

Status and measurement data - main menu

- Display of status-, warning-, and error messages.
- Status overview of the switching inputs/outputs.
- Bar graph for the reception level.
- Activated interface.
- Measurement value.

No entries can be made via the display.
See "Indicators in the display" on page 39.

```
Parameter
  Parameter handling
  SSI
  Position value
  I/O
  Other
```

Parameter - main menu

Configuration of the SSI interface is performed via the "SSI" menu item.

```
Language
selection
o Deutsch
● English
o Español
o Français
o Italiano
```

Language selection - main menu

- Selection of the display language.

See "Language selection menu" on page 48.

```
Service
  Status messages
  Diagnostics
  Expanded diagnostics
```

Service - main menu

- Display of status messages.
- Display of diagnostic data.

No entries can be made via the display.
See "Service menu" on page 48.

Device buttons:

- Navigate **upward/laterally**
- Navigate **downward/laterally**
- ESC **ESCAPE** leave
- **ENTER** confirm

Input of values

```
100
 <-0123456789     save
Standard ----- Unit
   126  |     |
```

- ◄ + ↵ **Delete character**
- 0...9 + ↵ **Enter digit**
- save + ↵ **Save input**

1 General information 4
1.1 Explanation of symbols 4
1.2 Declaration of conformity 4
1.3 Description of functions AMS 307*i* 5

2 Safety 6
2.1 Intended use 6
2.2 Foreseeable misuse 7
2.3 Competent persons 7
2.4 Exemption of liability 8
2.5 Laser safety notices 8

3 Fast commissioning / operating principle 11
3.1 Mounting the AMS 307*i* 11
3.1.1 Mounting the device 11
3.1.2 Mounting the reflector 11
3.2 Connecting the voltage supply 12
3.3 Display 12
3.4 SSI interface 12

4 Technical data 13
4.1 Specifications of the laser measurement system 13
4.1.1 General specifications AMS 307*i* 13
4.1.2 Dimensioned drawing AMS 307*i* 15
4.1.3 Type overview AMS 307*i* 16

5 Installation and mounting 17
5.1 Storage, transportation 17
5.2 Mounting the AMS 307*i* 18
5.2.1 Optional mounting bracket 20
5.2.2 Parallel mounting of the AMS 307*i* 21
5.2.3 Parallel mounting of AMS 307*i* and DDLS optical data transmission 22
5.3 Mounting the AMS 307*i* with laser beam deflector unit 23
5.3.1 Mounting the laser beam deflector unit with integrated mounting bracket 23
5.3.2 Dimensioned drawing of US AMS 01 deflector unit 24
5.3.3 Mounting the US 1 OMS deflector unit without mounting bracket 25

6 Reflectors 26

6.1 General information 26

6.2 Description of the reflective tape 26
6.2.1 Specifications of the self-adhesive foil 27
6.2.2 Specifications of the reflective tape on a support plate 27
6.2.3 Dimensioned drawing of reflective tape on a support plate 28
6.2.4 Specifications of heated reflectors 29
6.2.5 Dimensioned drawing of heated reflectors 30

6.3 Selecting reflector sizes 31

6.4 Mounting the reflector 32
6.4.1 General information 32
6.4.2 Mounting the reflector 32
6.4.3 Table of reflector pitches 35

7 Electrical connection 36

7.1 Safety notices for the electrical connection 36

7.2 PWR – voltage supply / switching input/output 37

7.3 SSI 37

7.4 Service 38

8 Display and control panel AMS 307*i* 39

8.1 Structure of the control panel 39

8.2 Status display and operation 39
8.2.1 Indicators in the display 39
8.2.2 LED status displays 41
8.2.3 Control buttons 42

8.3 Menu description 43
8.3.1 The main menus 43
8.3.2 Parameter menu 44
8.3.3 Language selection menu 48
8.3.4 Service menu 48

8.4 Operation 49

9 SSI interface 52

9.1 Principle functionality of the SSI interface 52
9.1.1 SSI sequence diagram 53
9.1.2 Cable length as a function of the data rate 54

9.2 SSI - electrical connection 54
9.3 Default settings of the SSI interface 55
9.3.1 Changing the SSI settings via the display 55

10 Diagnostics and troubleshooting 56

10.1 Service and diagnostics in the display of the AMS 307*i* 56
10.1.1 Status messages 56
10.1.2 Diagnostics 57
10.1.3 Expanded diagnostics 57
10.2 General causes of errors 58
10.2.1 Power LED 58
10.3 Interface errors. 58
10.3.1 BUS LED 58
10.4 Status display in the display of the AMS 307*i* 59

11 Type overview and accessories 60

11.1 Part number code 60
11.2 Type overview AMS 307*i* (SSI) 60
11.3 Overview of reflector types 60
11.4 Accessories 61
11.4.1 Accessory mounting bracket 61
11.4.2 Accessory deflector unit 61
11.4.3 Accessory M12 connector 61
11.4.4 Accessory ready-made cables for voltage supply 62
11.4.5 Accessory ready-made cables for the SSI interface 63

12 Maintenance 65

12.1 General maintenance information 65
12.2 Repairs, servicing 65
12.3 Disassembling, packing, disposing 65

1 General information

1.1 Explanation of symbols

The symbols used in this operating manual are explained below.

Attention!

This symbol precedes text messages which must strictly be observed. Failure to comply with this information results in injuries to persons or damage to the equipment.

Attention Laser!

This symbol warns of possible danger caused by hazardous laser radiation.

Notice!

This symbol indicates text passages containing important information.

1.2 Declaration of conformity

The AMS 307*i* absolute measuring optical laser measurement system was designed and manufactured in accordance with applicable European directives and standards.

The AMS series is "UL LISTED" according to American and Canadian safety standards and fulfills the requirements of Underwriter Laboratories Inc. (UL).

Notice!

The Declaration of Conformity for these devices can be requested from the manufacturer.

The manufacturer of the product, Leuze electronic GmbH + Co. KG in D-73277 Owen, possesses a certified quality assurance system in accordance with ISO 9001.

1.3 Description of functions AMS 307*i*

The AMS 307*i* optical laser measurement system calculates distances to fixed as well as moving system parts. The distance to be measured is calculated according to the principle of the propagation time of radiated light. Here, the light emitted by the laser diode is reflected by a reflector onto the receiving element of the laser measurement system. The AMS 307*i* uses the "propagation time" of the light to calculate the distance to the reflector. The high absolute measurement accuracy of the laser measurement system and the fast response time are designed for position control applications.

With the AMS 3xx*i* product series, Leuze electronic makes available a range of internationally relevant interfaces. Note that each interface version listed below corresponds to a different AMS 3xx*i* model.

PROFIBUS, SSI	**AMS 304*i***
SSI	**AMS 307*i***
PROFINET	**AMS 348*i***
DeviceNet	**AMS 355*i***
EtherNet/IP	**AMS 358*i***
CANopen	**AMS 335*i***
EtherCAT	**AMS 338*i***
Ethernet	**AMS 308*i***
INTERBUS	**AMS 384*i***
RS485	**AMS 301*i***
RS232, RS422	**AMS 300*i***

2 Safety

This sensor was developed, manufactured and tested in line with the applicable safety standards. It corresponds to the state of the art.

2.1 Intended use

The AMS 3xx*i* is an absolute measuring optical laser measurement system which allows distance measurement of up to 200 m against a reflector.

Areas of application

The AMS 3xx*i* is designed for the following areas of application:

- Positioning of automated, moving plant components
- Travel and lifting axes of high-bay storage devices
- Repositioning units
- Gantry crane bridges and their trolleys
- Elevators
- Electroplating plants

CAUTION

Observe intended use!

- Only operate the device in accordance with its intended use. The protection of personnel and the device cannot be guaranteed if the device is operated in a manner not complying with its intended use.
  Leuze electronic GmbH + Co. KG is not liable for damages caused by improper use.
- Read the technical description before commissioning the device. Knowledge of this technical description is an element of proper use.

NOTICE

Comply with conditions and regulations!

- Observe the locally applicable legal regulations and the rules of the employer's liability insurance association.

Attention

For UL applications, use is permitted exclusively in Class 2 circuits according to NEC (National Electric Code).

2.2 Foreseeable misuse

Any use other than that defined under "Intended use" or which goes beyond that use is considered improper use.

In particular, use of the device is not permitted in the following cases:

- Rooms with explosive atmospheres
- As stand-alone safety component in accordance with the machinery directive [1)]
- For medical purposes

NOTICE
Do not modify or otherwise interfere with the device. Do not carry out modifications or otherwise interfere with the device. The device must not be tampered with and must not be changed in any way. The device must not be opened. There are no user-serviceable parts inside. Repairs must only be performed by Leuze electronic GmbH + Co. KG.

2.3 Competent persons

Connection, mounting, commissioning and adjustment of the device must only be carried out by competent persons.

Prerequisites for competent persons:

- They have a suitable technical education.
- They are familiar with the rules and regulations for occupational safety and safety at work.
- They are familiar with the technical description of the device.
- They have been instructed by the responsible person on the mounting and operation of the device.

Certified electricians

Electrical work must be carried out by a certified electrician.

Due to their technical training, knowledge and experience as well as their familiarity with relevant standards and regulations, certified electricians are able to perform work on electrical systems and independently detect possible dangers.

In Germany, certified electricians must fulfill the requirements of accident-prevention regulations BGV A3 (e.g. electrician foreman). In other countries, there are respective regulations that must be observed.

1) Use as safety-related component within the safety function is possible, if the component combination is designed correspondingly by the machine manufacturer.

2.4 Exemption of liability

Leuze electronic GmbH + Co. KG is not liable in the following cases:

- The device is not being used properly.
- Reasonably foreseeable misuse is not taken into account.
- Mounting and electrical connection are not properly performed.
- Changes (e.g., constructional) are made to the device.

2.5 Laser safety notices

ATTENTION LASER RADIATION – LASER CLASS 2

Never look directly into the beam!

The device satisfies the requirements of IEC 60825-1:2007 (EN 60825-1:2007) safety regulations for a product in **laser class 2** as well as the U.S. 21 CFR 1040.10 regulations with deviations corresponding to "Laser Notice No. 50" from June 24th, 2007.

- Never look directly into the laser beam or in the direction of reflecting laser beams.
  If you look into the beam path over a longer time period, there is a risk of injury to the retina.
- Do not point the laser beam of the device at persons!
- Interrupt the laser beam using a non-transparent, non-reflective object if the laser beam is accidentally directed towards a person.
- When mounting and aligning the device, avoid reflections of the laser beam off reflective surfaces!
- CAUTION! The use of operating or adjusting devices other than those specified here or carrying out of differing procedures may lead to dangerous exposure to radiation.
- Observe the applicable statutory and local laser protection regulations.
- The device must not be tampered with and must not be changed in any way.
  There are no user-serviceable parts inside the device.
  Repairs must only be performed by Leuze electronic GmbH + Co. KG.

NOTICE

Affix laser information and warning signs!

Laser information and warning signs are attached to the device (see figure 2.1):

In addition, self-adhesive laser warning and information signs (stick-on labels) are supplied in several languages (see figure 2.2).

- Affix the laser information sheet to the device in the language appropriate for the place of use.

  When using the device in the U.S.A., use the stick-on label with the "Complies with 21 CFR 1040.10" notice.
- Affix the laser information and warning signs near the device if no signs are attached to the device (e.g., because the device is too small) or if the attached laser information and warning signs are concealed due to the installation position.

  Affix the laser information and warning signs so that they are legible without exposing the reader to the laser radiation of the device or other optical radiation.

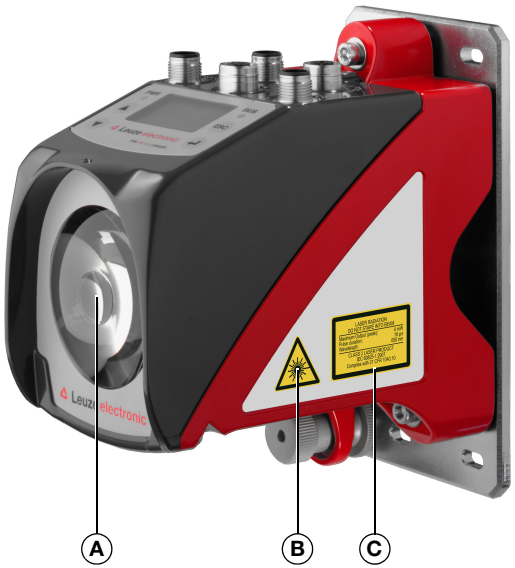

A Laser aperture
B Laser warning sign
C Laser information sign with laser parameters

Figure 2.1: Laser apertures, laser warning signs

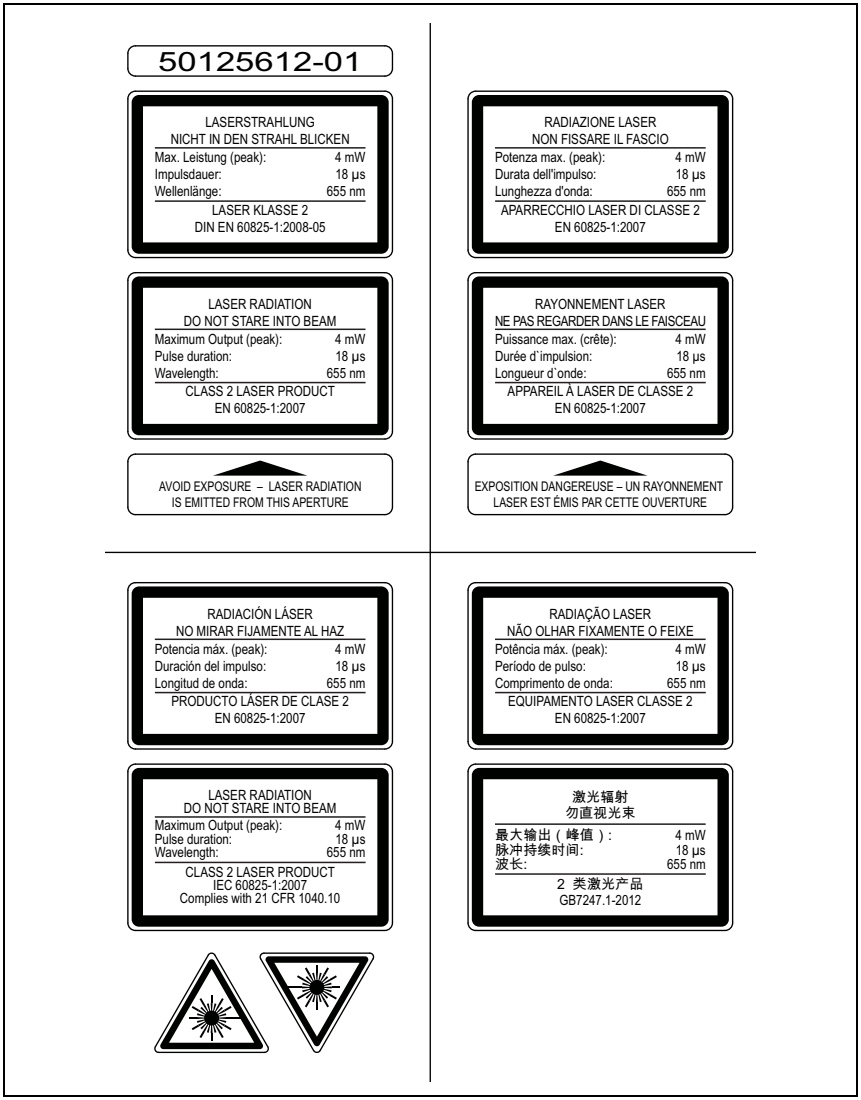

Figure 2.2: Laser warning and information signs – supplied stick-on labels

3 Fast commissioning / operating principle

Notice!

*Below, you will find a **short description of the initial commissioning** of the AMS 307i. Detailed explanations of the listed points can be found throughout the handbook.*

3.1 Mounting the AMS 307*i*

The AMS 307*i* and the corresponding reflector are mounted on two mutually opposing, plane-parallel, flat walls.

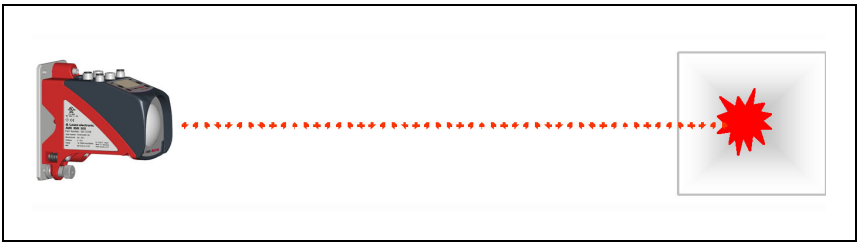

Figure 3.1: Schematic illustration of mounting

Attention!

For error-free position measurement, there must be an unobstructed line-of-sight between the AMS 307*i and the reflector.*

3.1.1 Mounting the device

The laser is mounted using 4 screws (M5).

Alignment is performed using 2 adjustment screws. Adjust so that the laser light spot is positioned at the center of the reflector. The alignment is to be secured with the knurled nut and locked with the M5 nut.

Further information can be found in chapter 5.2 and chapter 5.3.

3.1.2 Mounting the reflector

The reflector is mounted using 4 screws (M5). The reflector is angled using the spacer sleeves included. Incline the reflector by approx. 1°.

Detailed information can be found in chapter 6.4.

3.2 Connecting the voltage supply

The laser measurement system is connected using M12 connectors. The voltage supply is connected via the PWR M12 connection.

Detailed information can be found in chapter 7.

3.3 Display

Once the laser measurement system is supplied with voltage, the device status as well as the measured position values can be read on the display. The display automatically switches to the display of the measurement values.

Use the up/down buttons ▲ ▼ to the left of the display to read and change a wide range of data and parameters.

Detailed information can be found in chapter 8.

3.4 SSI interface

For correct data exchange between frequency inverter and AMS 307*i*, both devices must have the same settings for the following parameters.

- Coding
- Number of data bits
- Resolution
- Error bit on/off

For further information, see also chapter 9 "SSI interface" on page 52 and display menu structure level 2, menu item "SSI" in the appendix of the manual.

4 Technical data

4.1 Specifications of the laser measurement system

4.1.1 General specifications AMS 307*i*

Measurement data	AMS 307*i* 40	AMS 307*i* 120
Measurement range	0.2 … 40 m	0.2 … 120 m
Accuracy	± 2 mm	± 2 mm
Consistency [1]	0.3 mm	0.5 mm
Light spot diameter	≤ 40 mm	≤ 100 mm
Output time	1.7 ms	
Response time	14 ms	
Basis for contouring error calculation	7 ms	
Resolution	adjustable, see chapter 9 "SSI interface"	
Temperature drift	≤ 0.1 mm/K	
Ambient temperature sensitivity	1 ppm/K	
Air pressure sensitivity	0.3 ppm/hPa	
Traverse rate	≤ 10 m/s	
Electrical data		
Supply voltage Vin [2]	18 … 30 VDC	
Current consumption	≤ 250 mA / 24 VDC	
Optical data		
Transmitter	laser diode, red light	
Laser class	2 in accordance with IEC 60825-1:2007, CDRH	
Wavelength	655 nm	
Impulse duration	≤ 18 µs	
Max. output power (peak)	≤ 4 mW	
Interfaces		
SSI clock rate	50 kHz … 800 kHz	
Operating and display elements		
Keyboard	4 buttons	
Display	monochromatic graphical display, 128 x 64 pixels	
LED	2 LEDs, two-colored	

Inputs/outputs	
Quantity	2, programmable
Input	protected against polarity reversal
Output	max. 60 mA, short-circuit proof
Mechanical data	
Housing	cast zinc and aluminum
Optics	glass
Weight	approx. 2.45 kg
Degree of protection	IP 65 acc. to EN 60529 [3]
Environmental conditions	
Operating temperature	-5 °C … +50 °C
Storage temperature	-30 °C … +70 °C
Air humidity	max. 90 % rel. humidity, non-condensing
Mechanical/electrical loading capacity	
Vibration	acc. to EN 60068-2-6
Noise	acc. to EN 60060-2-64
Shock	acc. to EN 60068-2-27
EMC	acc. to EN 61000-6-2 and EN 61000-6-4 [4]

1) Statistical error: 1 sigma; minimum switch-on time: 2 min.
2) For UL applications: only for use in "Class 2" circuits acc. to NEC.
3) With screwed-on M12 plugs or mounted caps.
4) This is a Class A product. In a domestic environment this product may cause radio interference, in which case the operator may be required to take adequate measures.

The AMS 307*i* is designed in accordance with safety class III for supply with PELV (protective extra-low voltage).

4.1.2 Dimensioned drawing AMS 307*i*

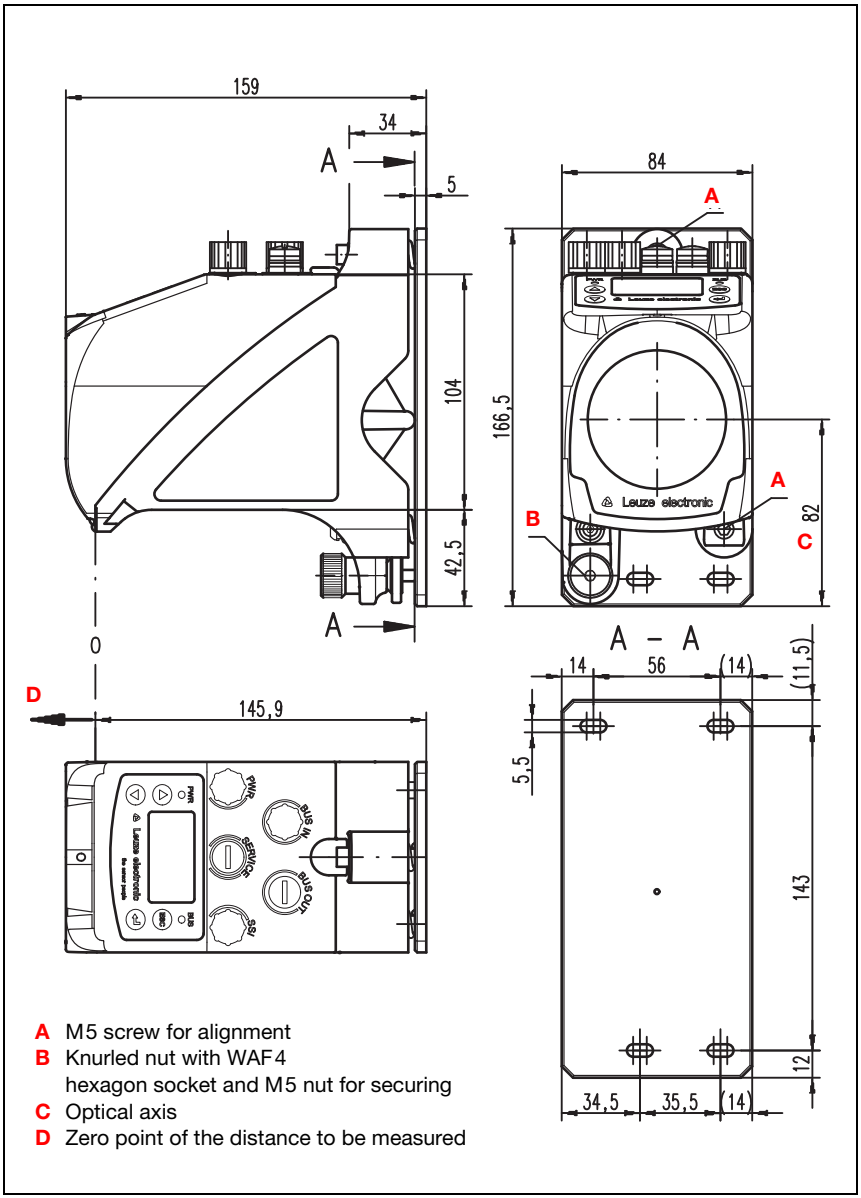

Figure 4.1: Dimensioned drawing AMS 307*i*

4.1.3 Type overview AMS 307*i*

AMS 307i

Type designation	Description	Part no.
AMS 307*i* 40	40 m operating range, SSI interface	50137593
AMS 307*i* 120	120 m operating range, SSI interface	50137594

Table 4.1: Type overview AMS 307*i*

5 Installation and mounting

5.1 Storage, transportation

Attention!

Package the device for transport and storage in such a way that is protected against shock and humidity. The original packaging offers optimum protection. Heed the required environmental conditions specified in the technical data.

Unpacking

- *Check the packaging for any damage. If damage is found, notify the post office or shipping agent as well as the supplier.*
- *Check the delivery contents using your order and the delivery papers:*
  - Delivered quantity
  - Device type and model as indicated on the name plate
  - Brief manual

The name plate provides information as to what AMS 307*i* type your device is. For specific information, please refer to chapter 11.2.

Name plates

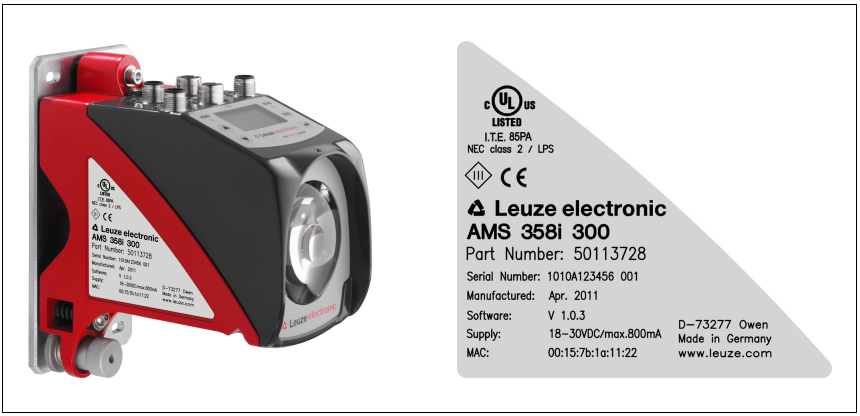

Figure 5.1: Device name plate using the AMS 358i as an example

Notice!

Please note that the shown name plate is for illustration purposes only; the contents do not correspond to the original.

- *Save the original packaging for later storage or shipping.*

If you have any questions concerning your shipment, please contact your supplier or your local Leuze electronic sales office.

Observe the applicable local regulations when disposing of the packaging materials.

5.2 Mounting the AMS 307*i*

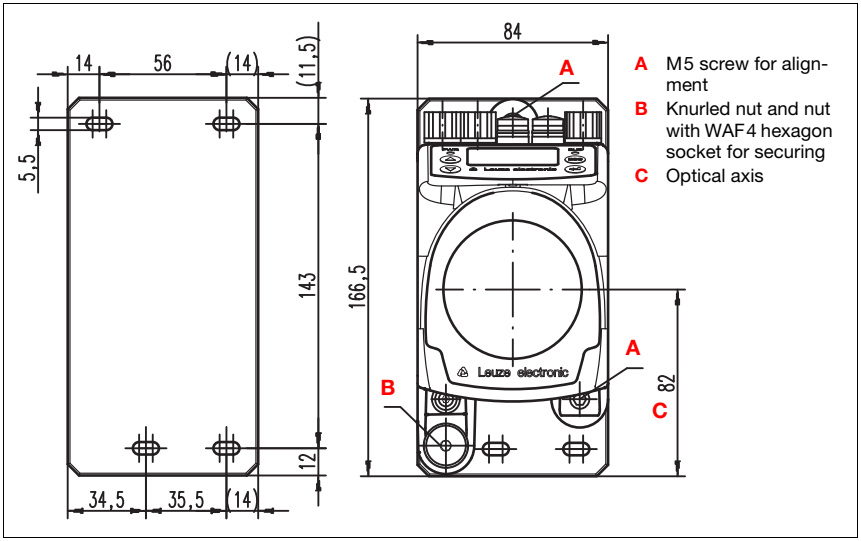

Figure 5.2: Mounting the device

The AMS 307*i* and the corresponding reflector are mounted on two mutually opposing, plane-parallel, flat walls or system parts. For error-free position measurement, there must be an unobstructed line-of-sight connection between the AMS 307*i* and the reflector.

Use M5 screws to fasten the laser measurement system. Secure the screws with a toothed lock washer to protect against loosening caused by vibrations.

Aligning the laser light spot in the center of the reflector

The laser light spot has to be aligned so that it always hits the center of the opposing reflector, both at close range as well as at the maximum measurement distance. **To align, use the two M5 Allen screws** ("**A**" in figure 5.2). When aligning please ensure that the knurled nut and the lock nut ("**B**" in figure 5.2) are opened wide.

Attention!

To prevent the laser measurement system from moving out of alignment during continuous operation, subsequently hand-tighten the knurled nut and counterlock with the nut with WAF4 hexagon socket ("B" in figure 5.2). Knurled nut and nut must not be tightened until alignment has been completed.

Attention!

The device must not be opened. Failure to comply will render the guarantee void. Warranted features cannot be guaranteed after the device has been opened.

5.2.1 Optional mounting bracket

A mounting bracket for mounting the AMS 307*i* on a flat, horizontal surface is available as an optional accessory.

Type designation:	MW OMS/AMS 01
Part no.:	50107255

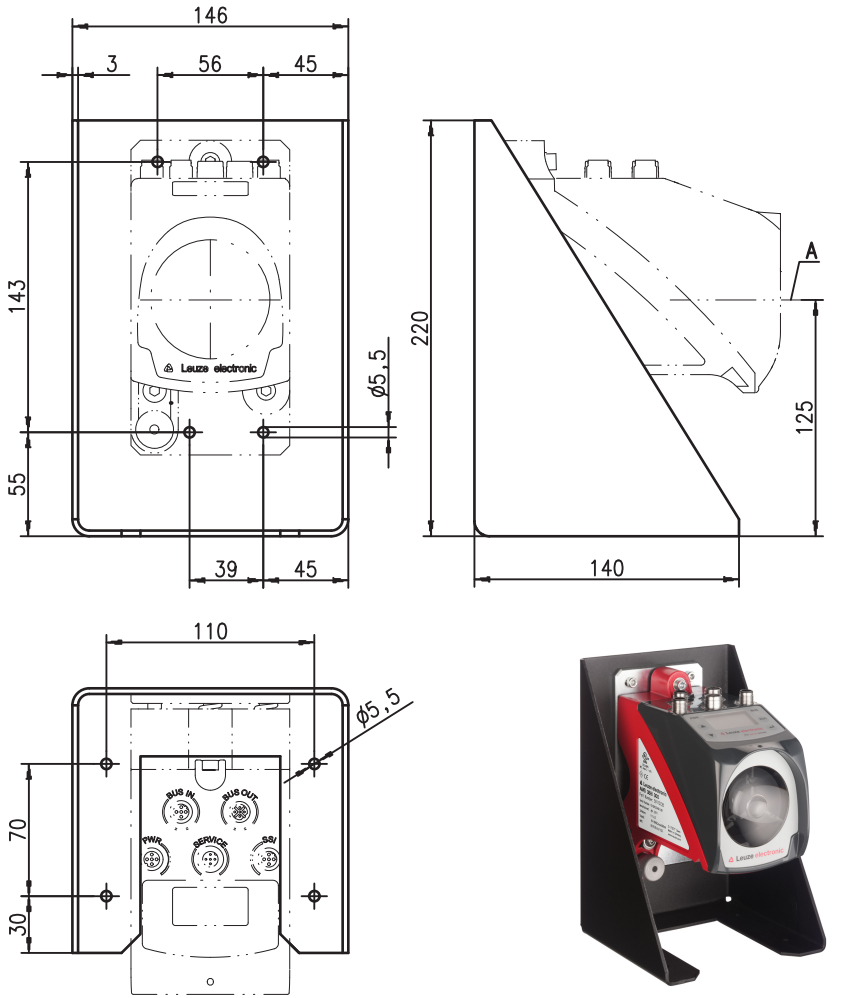

A Laser beam

Figure 5.3: Optional mounting bracket

5.2.2 Parallel mounting of the AMS 307*i*

Definition of the term "parallel spacing"

As shown in figure 5.4, dimension X describes the "parallel spacing" of the inner edges of the two laser light spots on the reflector.

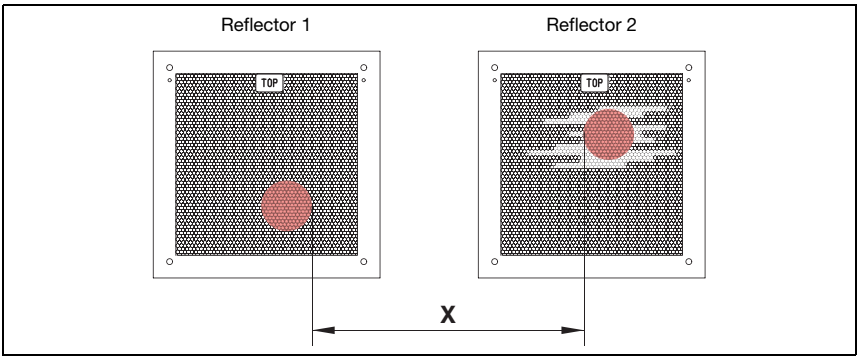

Figure 5.4: Minimum parallel spacing X between adjacent AMS 307*i*

The diameter of the light spot increases with distance.

	AMS 307*i* 40	AMS 307*i* 120
Max. measurement distance	40 m	120 m
Light spot diameter	≤ 40 mm	≤ 100 mm

Thus, the center-to-center spacing of the two AMS 307*i* devices with respect to one another can be calculated as a function of the maximum measurement distance.

To define the minimum parallel spacing between two AMS 307*i*, it is necessary to distinguish between three different arrangements of AMS 307*i* and reflectors.

The AMS 307i are mounted stationary and in parallel on one plane.
Both reflectors move independently of one another at different distances to the AMS 307i.

Minimum parallel spacing X of the two laser light spots:

X = 100 mm + (max. measurement distance in mm x 0.01)

The AMS 307i are mounted stationary and in parallel on one plane.
Both reflectors move in parallel at the same distance to the AMS 307i.

Measurement distance **up to 120 m**: minimum parallel spacing **X ≥ 600 mm**

The reflectors are mounted stationary and in parallel on one plane.
Both AMS 307*i* move independently of one another at different or the same distances to the reflectors.

Measurement distance **up to 120 m**: minimum parallel spacing **X** ≥ **600 mm**

Notice!

*Please note that when the AMS 307*i* are mounted in a mobile manner, travel tolerances could cause the two laser light spots to move towards each other.*
*Take the travel tolerances of the vehicle into account when defining the parallel spacing of adjacent AMS 307*i*.*

5.2.3 Parallel mounting of AMS 307*i* and DDLS optical data transmission

The optical data transceivers of the DDLS series and the AMS 307*i* do not interfere with one another. Depending on the size of the used reflector, the DDLS can be mounted with a minimum parallel spacing of 100 mm to the AMS 307*i*. The parallel spacing is independent of the distance.

5.3 Mounting the AMS 307*i* with laser beam deflector unit

General information

The two available deflector units are used for the 90° deflection of the laser beam, see "Accessory deflector unit" on page 61.

Attention!

The deflector units are designed for a maximum range of 40 m.
Longer distances on request.

5.3.1 Mounting the laser beam deflector unit with integrated mounting bracket

The AMS 307*i* is screwed onto the mechanism of the US AMS 01 deflector unit. The mirror can be mounted for three deflection directions:

1. Upward beam deflection
2. Beam deflection to the left
3. Beam deflection to the right

The deflector unit is mounted on plane-parallel, flat walls or plant components. For error-free position measurement, there must be an interruption-free line-of-sight between the AMS 307*i*… and the deflection mirror as well as between the mirror and the reflector.

Use the M5 screws to mount the deflector unit. Secure the screws with a toothed lock washer to protect against loosening caused by vibrations.

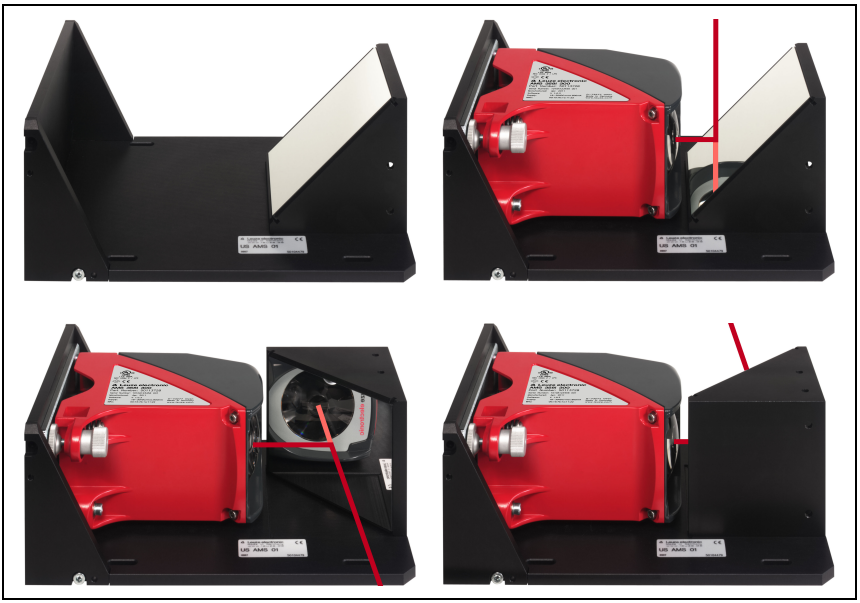

Figure 5.5: Mounting variants of the US AMS 01 laser beam deflector unit

5.3.2 Dimensioned drawing of US AMS 01 deflector unit

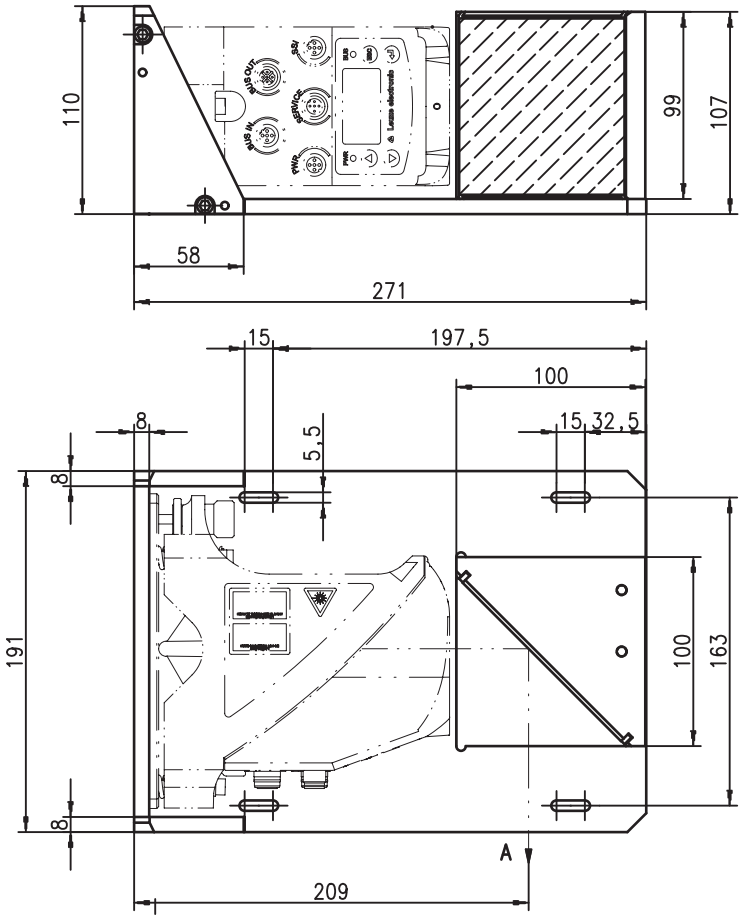

A Laser beam

Figure 5.6: Dimensioned drawing of US AMS 01 deflector unit

5.3.3 Mounting the US 1 OMS deflector unit without mounting bracket

The US 1 OMS deflector unit and the AMS 307*i* are mounted separately.

Notice!

When mounting, make certain that the laser light spot of the AMS 307i is aligned in the center of the deflection mirror.

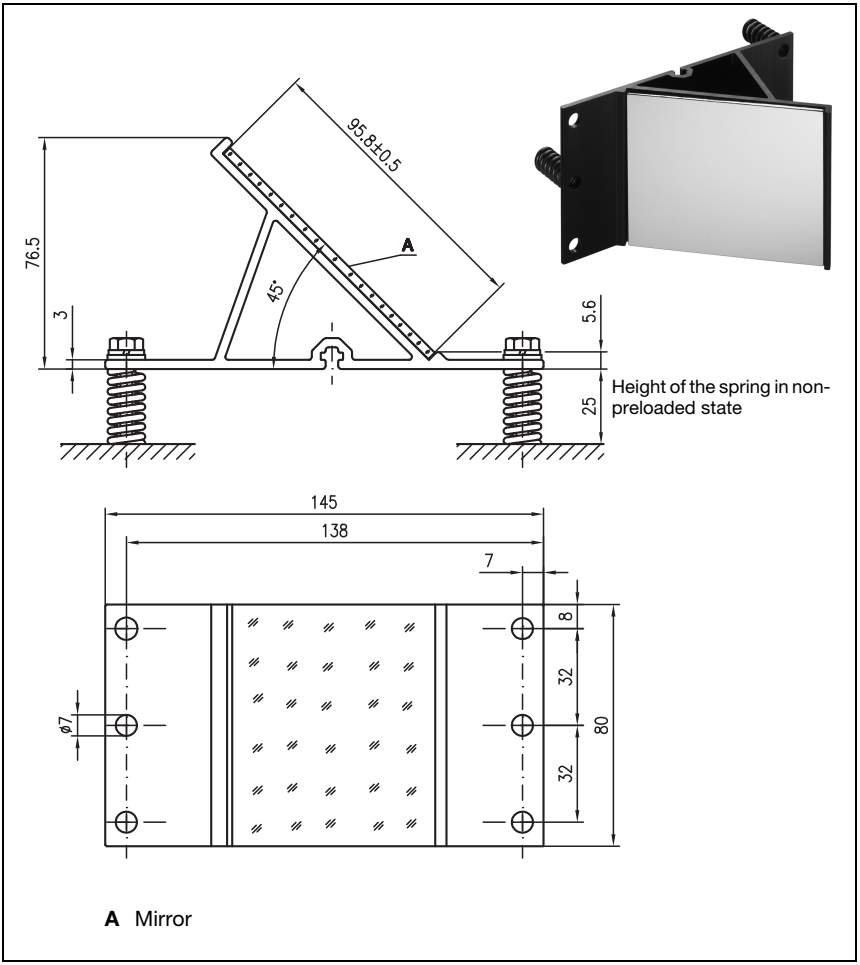

Figure 5.7: Photo and dimensioned drawing of the US 1 OMS deflector unit

Alignment of the laser light spot on the reflector is performed as described in chapter 5.2.

ПРОМЭЛЕКТРОНИКА / sales@prom-elec.com

6 Reflectors

6.1 General information

The AMS 307*i* measures distances against a reflective tape specified by Leuze electronic. All provided specifications for the AMS 307*i*, such as the operating range or accuracy, can only be achieved with the reflective tape specified by Leuze electronic.

The reflective tapes are available as adhesive tapes, affixed to a metal plate and with an integrated heater especially for use at low temperatures. Reflective tapes with heating have the designation "**Reflective tape ...x...-H**", where "**H**" is an abbreviation for the heating variant.

The reflective tapes/reflectors must be ordered separately. The choice of size is left to the user. In chapter 6.3, recommendations on reflector size are provided as a function of the distance that is to be measured. In any case, the user must check to determine whether the recommendation is suitable for the respective application.

6.2 Description of the reflective tape

The reflective tape consists of a white, microprism-based reflective material. The microprisms are protected with a highly transparent, hard protective layer.

Under certain circumstances, the protective layer may lead to surface reflections. The surface reflections can be directed past the AMS 307*i* by positioning the reflective tape at a slight incline. The inclination of the reflective tape/reflectors is described in chapter 6.4.2. The required pitch can be found in table 6.1 "Reflector pitch resulting from spacer sleeves" on page 35.

The reflective tapes are provided with a protective foil that can easily be pulled off. This must be removed from the reflector before the complete system is put into operation.

6.2.1 Specifications of the self-adhesive foil

	Part		
Type designation	**Reflective tape 200x200-S**	**Reflective tape 500x500-S**	**Reflective tape 914x914-S**
Part no.	50104361	50104362	50108988
Foil size	200x200mm	500x500mm	914x914mm
Recommended application temperature for adhesive tape	+5°C … +25°C		
Temperature resistance, affixed	-40°C … +80°C		
Mounting surface	The mounting surface must be clean, dry and free of grease.		
Cutting the tape	Cut with a sharp tool, always on the side of the prism structure.		
Cleaning	Do not use any agents that act with a grinding effect. A conventional household detergent can be used as a cleaning agent. Rinse with clear water and dry the surface.		
Storing the foil	Store in a cool and dry place.		

6.2.2 Specifications of the reflective tape on a support plate

The reflective tape is affixed to a support plate. Included with the support plate are spacers for positioning at an incline - for avoiding surface reflections - (see chapter 6.4.2 "Mounting the reflector").

	Part		
Type designation	**Reflective tape 200x200-M**	**Reflective tape 500x500-M**	**Reflective tape 914x914-M**
Part no.	50104364	50104365	50104366
Foil size	200x200mm	500x500mm	914x914mm
Outer dimensions of the support plate	250x250mm	550x550mm	964x964mm
Weight	1.2kg	2.8kg	25kg
Cleaning	Do not use any agents that act with a grinding effect. A conventional household detergent can be used as a cleaning agent. Rinse with clear water and dry the surface.		
Storing the reflector	Store in a cool and dry place.		

6.2.3 Dimensioned drawing of reflective tape on a support plate

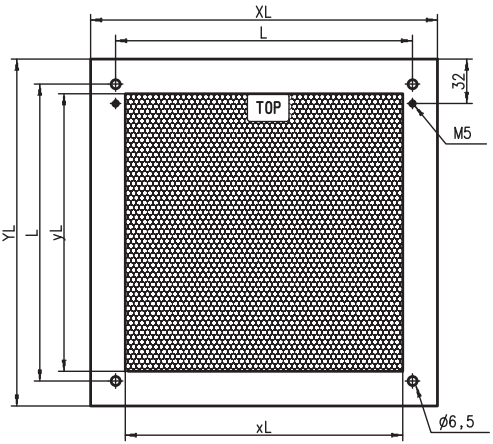

Always align the **TOP** marking with the AMS connections! (chapter 6.4.2)

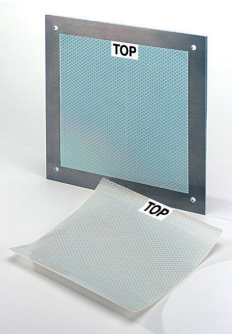

Figure 6.1: Dimensioned drawing of reflectors

Part	Reflective tape (mm)		Reflector plate (mm)		
	xL	yL	XL	YL	L
Reflective tape 200x200-M	200	200	250	250	214
Reflective tape 500x500-M	500	500	550	550	514
Reflective tape 914x914-M	914	914	964	964	928

6.2.4 Specifications of heated reflectors

The reflective tape is affixed to a heated, thermally insulated base. The insulation results in a very high energetic efficiency.

Only the reflective tape is kept at the specified temperature by the integrated heater. Through the insulation on the back, the generated heat cannot be transferred via the steel construction. Energy costs are greatly reduced in the case of continuous heating.

	Part		
Type designation	**Reflective tape 200x200-H**	**Reflective tape 500x500-H**	**Reflective tape 914x914-H**
Part no.	50115020	50115021	50115022
Voltage supply	230VAC		
Power	100W	600W	1800W
Current consumption	~ 0.5A	~ 3A	~ 8A
Length of the supply line	2 m		
Size of the reflective tape	200x200mm	500x500mm	914x914mm
Outer dimensions of the base material	250x250mm	550x550mm	964x964mm
Weight	0.5kg	2.5kg	12kg
Temperature control	Controlled heating with the following switch-on and switch-off temperatures, measured at the reflector surface.		
Switch-on temperature	~ 5°C		
Switch-off temperature	~ 20°C		
Operating temperature	-30°C … +70°C		
Storage temperature	-40°C … +80°C		
Air humidity	Max. 90%, non-condensing.		
Cleaning	Do not use any agents that act with a grinding effect. A conventional household detergent can be used as a cleaning agent. Rinse with clear water and dry the surface.		
Storing the reflector	Store in a cool and dry place.		

6.2.5 Dimensioned drawing of heated reflectors

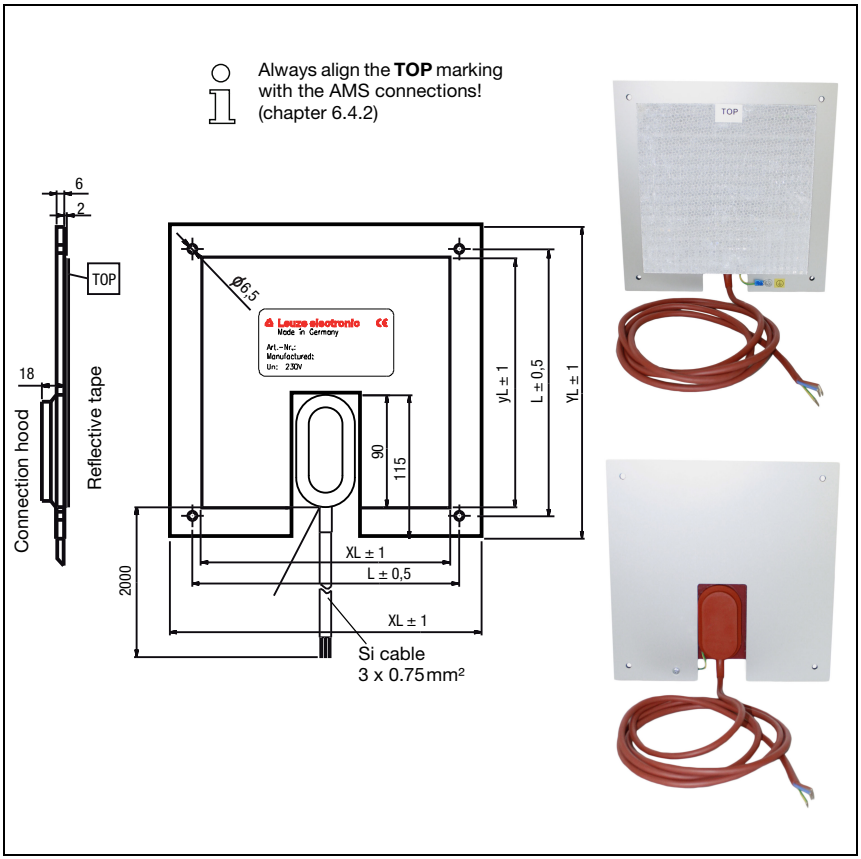

Figure 6.2: Dimensioned drawing of heated reflectors

Part	Reflective tape (mm)		Insulated base plate (mm)		
	xL	yL	XL	YL	L
Reflective tape 200x200-H	200	200	250	250	214
Reflective tape 500x500-H	500	500	550	550	514
Reflective tape 914x914-H	914	914	964	964	928

6.3 Selecting reflector sizes

Depending on system design, the reflector can be mounted so that it travels on the vehicle or it can be mounted at a fixed location.

Attention!

The reflector sizes shown below are a recommendation from Leuze electronic for on-vehicle mounting of the AMS 307i. For stationary mounting of the AMS 307i, a smaller reflector is generally sufficient for all measurement distances.
On the basis of the system planning and design, always check whether mechanical travel tolerances may require the use of a reflector larger than that which is recommended. This applies, in particular, when the laser measurement system is mounted on a vehicle. During travel, the laser beam must reach the reflector without interruption. For on-vehicle mounting of the AMS 307i, the reflector size must accommodate any travel tolerances that may arise and the associated "wandering" of the light spot on the reflector.

Overview of reflector types

Recommended reflector sizes			
AMS 307*i* selection (Operating range in m)	**Recommended reflector size (H x W)**	**Type designation …-S = Self-adhesive …-M = support plate …-H = heating**	**Part no.**
AMS 307*i* 40 (**max. 40m**)	200x200mm	Reflective tape 200x200-S Reflective tape 200x200-M Reflective tape 200x200-H	50104361 50104364 50115020
AMS 307*i* 120 (**max. 120m**)	500x500mm	Reflective tape 500x500-S Reflective tape 500x500-M Reflective tape 500x500-H	50104362 50104365 50115021

6.4 Mounting the reflector

6.4.1 General information

Self-adhesive reflective tapes

The reflective tapes of the "Reflective tape …x…**-S**" self-adhesive series must be affixed to a flat, clean and grease-free surface. We recommend using a separate metal plate, which is to be provided on-site.

As described in table 6.1, the reflective tape must be angled.

Reflective tapes on support plate

The reflective tapes of the "Reflective tape …x…**-M**" series are provided with corresponding mounting holes. Spacer sleeves are provided in the packet for achieving the necessary pitch angle. For further information see table 6.1.

Heated reflectors

The reflective tapes of the "Reflective tape ...x...**-H**" series are provided with corresponding mounting holes. Due to the voltage supply affixed on the rear, the reflector cannot be mounted flat. Included in the package are four distance sleeves in two different lengths. Use the distance sleeves to achieve a base separation to the wall as well as the necessary pitch for avoiding surface reflection. For further information see table 6.1.

The reflector is provided with a 2m-long connection cable for supplying with 230VAC. Connect the cable to the closest power outlet. Observe the current consumptions listed in the specifications.

Attention!

Connection work must be carried out by a certified electrician.

6.4.2 Mounting the reflector

The combination of laser measurement system and reflective tape/reflector is mounted so that the laser light spot hits the tape as centered as possible and without interruption.

For this purpose, use the alignment elements provided on the AMS 307*i*… (see chapter 5.2 "Mounting the AMS 307i"). If necessary, remove the protective foil from the reflector.

Attention!

The "TOP" label mounted on the reflectors should be aligned the same as the connections of the AMS 307*i*.

Example:

If the AMS 307i is mounted so that the M12 connections are on the top, the "TOP" label of the reflector is also on the top. If the AMS 307i is mounted so that the M12 connections are on the side, the "TOP" label of the reflector is also on the side.

Notice!

The reflector must be angled. To do this, use the spacer sleeves. Angle the reflectors so that the ***surface reflections of the foil seal are deflected to the left, right, upwards or downwards****. chapter 6.4.3 gives the correct pitch with respect to the reflector size and, thus, the length of the spacers.*

Reflective tapes …-S and …-M

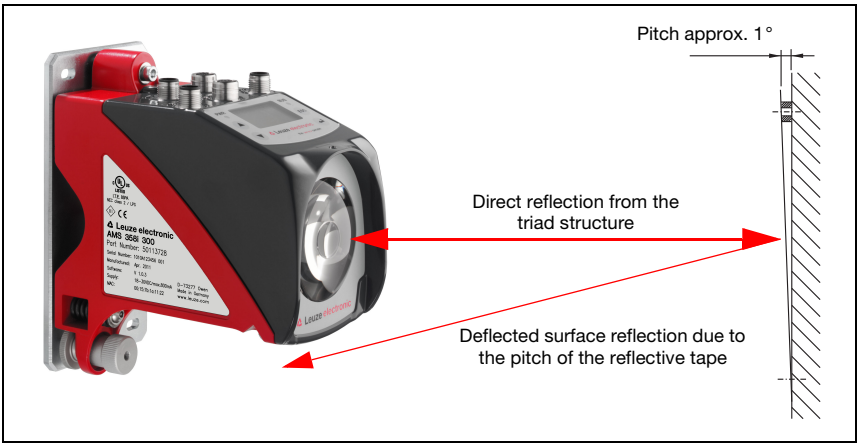

Figure 6.3: Mounting the reflector

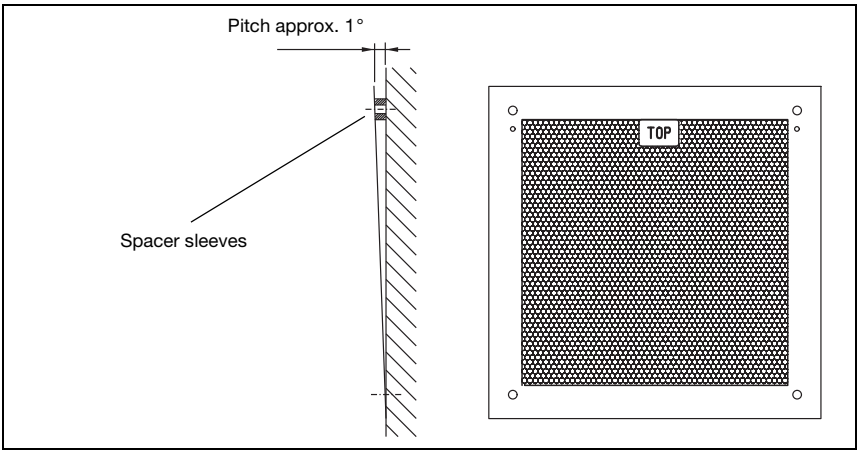

Figure 6.4: Pitch of the reflector

Reflective tapes …-H

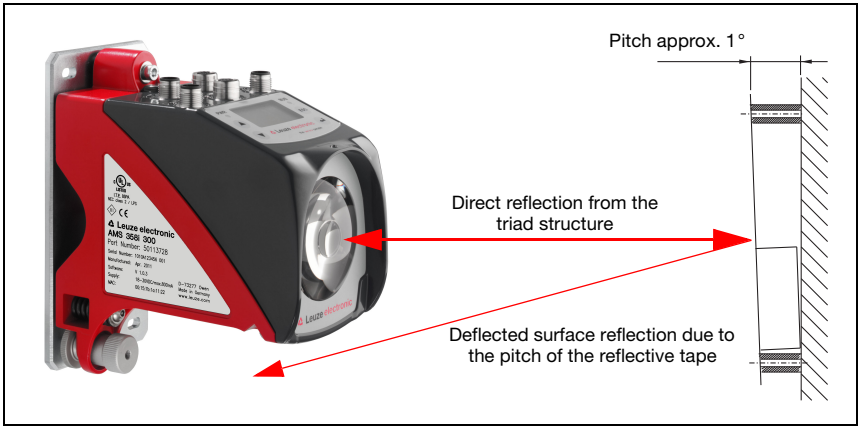

Figure 6.5: Mounting of heated reflectors

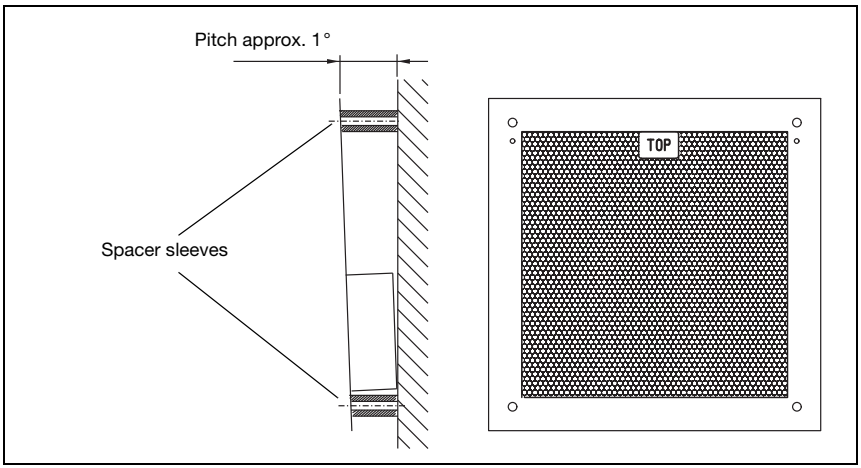

Figure 6.6: Pitch of the heated reflector

6.4.3 Table of reflector pitches

Reflector type	Pitch resulting from spacer sleeves [1]	
Reflective tape 200x200-S Reflective tape 200x200-M	**2 x 5mm**	
Reflective tape 200x200-H	**2 x 15mm**	**2 x 20mm**
Reflective tape 500x500-S Reflective tape 500x500-M	**2 x 10mm**	
Reflective tape 500x500-H	**2 x 15mm**	**2 x 25mm**
Reflective tape 749x914-S	**2 x 20mm**	
Reflective tape 914x914-S Reflective tape 914x914-M	**2 x 20mm**	
Reflective tape 914x914-H	**2 x 15mm**	**2 x 35mm**

1) Spacer sleeves are included in the delivery contents of reflective tape …-**M** and …-**H**

Table 6.1: Reflector pitch resulting from spacer sleeves

Notice!

Reliable function of the AMS 307i and, thus, max. operating range and accuracy can only be achieved with the reflective tape specified by Leuze electronic. No function can be guaranteed if other reflectors are used!

7 Electrical connection

The AMS 307*i* laser measurement systems are connected using variously coded M12 connectors. This ensures unique connection assignments.

Notice!

The corresponding mating connectors and ready-made cables are available as accessories for all cables. For further information, see chapter 11 "Type overview and accessories".

Figure 7.1: Connections of the AMS 307*i*

7.1 Safety notices for the electrical connection

Attention!

Before connecting the device, be sure that the supply voltage agrees with the value printed on the name plate.
The device may only be connected by a qualified electrician.
Ensure that the functional earth (FE) is connected correctly. Unimpaired operation is only guaranteed when the functional earth is connected properly.
If faults cannot be corrected, the device should be removed from operation and protected against possible use.

Attention!

For UL applications, use is permitted exclusively in Class 2 circuits according to NEC (National Electric Code).

The laser measurement systems are designed in accordance with safety class III for supply by PELV (protective extra-low voltage with reliable disconnection).

Notice!

Degree of protection IP65 is achieved only if the connectors and caps are screwed into place!

Described in detail in the following are the individual connections and pin assignments.

7.2 PWR – voltage supply / switching input/output

PWR (5-pin plug, A-coded)			
PWR	**Pin**	**Name**	**Remark**
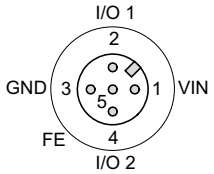 **M12 plug (A-coded)**	1	VIN	Positive supply voltage +18 … +30VDC
	2	I/O 1	Switching input/output 1
	3	GND	Negative supply voltage 0VDC
	4	I/O 2	Switching input/output 2
	5	FE	Functional earth
	Thread	FE	Functional earth (housing)

Table 7.1: PWR pin assignment

Further information on configuring the input/output can be found in display menu structure level 2, menu item "I/O" in the appendix of the manual.

7.3 SSI

SSI (5-pin plug, B-coded)			
SSI	**Pin**	**Name**	**Remark**
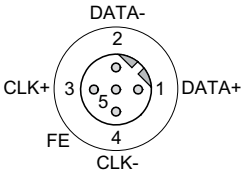 **M12 connector (B-coded)**	1	DATA+	**+** Data line SSI (output)
	2	DATA-	**-** Data line SSI (output)
	3	CLK+	**+** Clock line SSI (input electrically insulated)
	4	CLK-	**-** Clock line SSI (input electrically insulated)
	5	FE	Functional earth
	Thread	FE	Functional earth (housing)

Table 7.2: SSI pin assignment

7.4 Service

Service (5-pin socket, A-coded)			
SERVICE 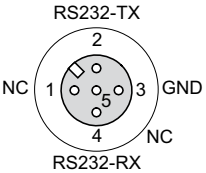 **M12 socket (A-coded)**	**Pin**	**Name**	**Remark**
	1	NC	Not used
	2	RS232-TX	Transmission line RS 232/service data
	3	GND	Voltage supply 0VDC
	4	RS232-RX	Receiving line RS 232/service data
	5	NC	Not used
	Thread	FE	Functional earth (housing)

Table 7.3: Service pin assignment

Notice!

The service interface is designed only for use by Leuze electronic!

8 Display and control panel AMS 307*i*

8.1 Structure of the control panel

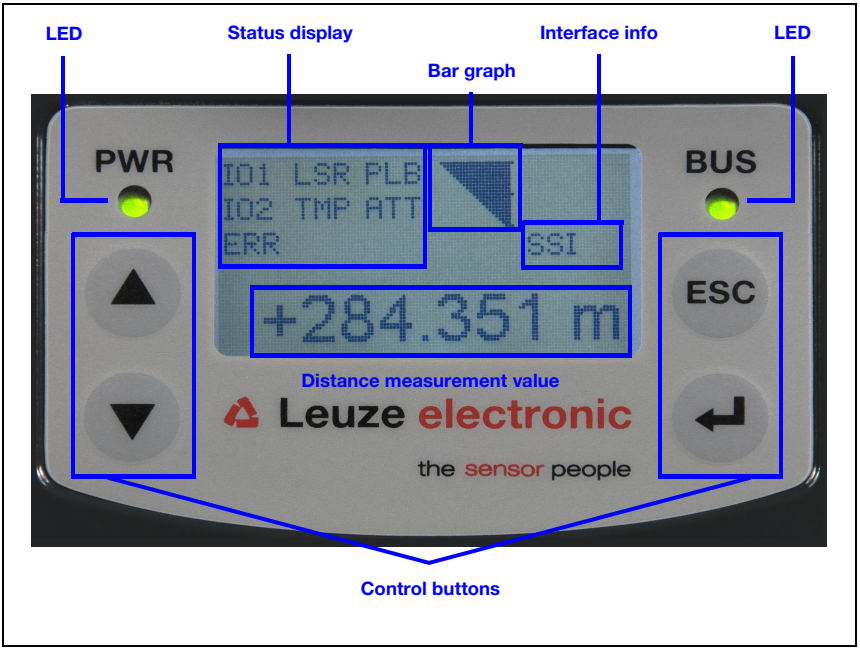

Figure 8.1: Structure of the control panel

8.2 Status display and operation

8.2.1 Indicators in the display

Status and warning messages in the display

IO1 **Input 1 or output 1 active:**
Function depending on configuration.

IO2 **Input 2 or output 2 active:**
Function depending on configuration.

LSR **Warning - laser prefailure message:**
Laser diode old, device still functional, exchange or have repaired.

TMP **Warning - temperature monitoring:**
Permissible internal device temperature exceeded / not met.

PLB **Plausibility error:**
Implausible measurement value. Possible causes: light beam interruption, outside of measurement range, permissible internal device temperature considerably exceeded or traverse rate >10m/s.

Depending on the configuration, either zero or the last valid measurement value is output at the interfaces.

ATT **Warning received signal:**
Laser outlet window or reflector soiled or fogged by rain, water vapor or fog. Clean or dry surfaces.

ERR **Internal hardware error:**
The device must be sent in for inspection.

Bar graph

Indicates the **strength of the received laser light**.

The center bar represents the **ATT** warning threshold. The distance value remains valid and is output at the interfaces.

If no bar graph is available, the **PLB** status information appears at the same time.

The measurement value has thus been assessed as being implausible. Depending on the configuration, either zero or the last valid measurement value is output at the interfaces.

Interface info

The abbreviation "SSI" stands for the activated SSI interface.

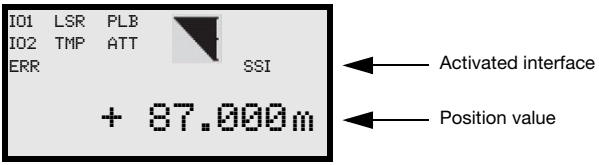

Position value

The measured position value is displayed in the configured unit of measurement.

+87.000m With the **metric** setting, the measurement value is always displayed in meters with **three decimal places**.

+87.0in With the **inch** setting, the measurement value is always displayed in inches with **one decimal place**.

8.2.2 LED status displays

PWR LED

PWR	**Off**	**Device OFF** - No supply voltage
PWR	**Flashing green**	**Power LED flashes green** - No measurement value output - Voltage connected - Self test running - Initialization running - Parameter download running - Boot process running
PWR	**Green continuous light**	**Power LED green** - AMS 307*i* ok - Measurement value output - Self test successfully finished - Device monitoring active
PWR	**Red flashing**	**Power LED flashes red** - Device ok but warning message (ATT, TMP, LSR) set in display - Light beam interruption - Plausibility error (PLB)
PWR	**Red continuous light**	**Power LED red** - No measurement value output; for details, see Display
PWR	**Orange continuous light**	**Power LED orange** - Parameter enable active - No data on the host interface

BUS LED

BUS	**Off**	**BUS LED off** - No supply voltage (Power) - SSI interface deactivated

BUS	**Green continuous light**	**BUS LED green** - SSI interface is activated
BUS	**Flashing green**	**BUS LED flashes green** - SSI interface is being initialized

8.2.3 Control buttons

▲	**Up**	Navigate upward/laterally.
▼	**Down**	Navigate downward/laterally.
ESC	**ESC**	Exit menu item.
↵	**ENTER**	Confirm/enter value, change menu levels.

Navigating within the menus

The menus within a level are selected with the up/down buttons ▲ ▼.

The selected menu item is activated with the enter button ↵.
Press the ESC button ESC to move up one menu level.
When one of the buttons is actuated, the display illumination is activated for 10 min.

Setting values

If input of a value is possible, the display looks like this:

```
100
        <-l0123456789  save
    Default ---------------- unit
126          |    |
```

← + ↵	Delete character
0...9 + ↵	Enter digit
save + ↵	Save

Use the ▲ ▼ and ↵ buttons to set the desired value. An accidental, incorrect entry can be corrected by selecting <-l and then pressing ↵.
Then use the ▲ ▼ buttons to select Save and save the set value by pressing ↵.

Selecting options

If options can be selected, the display looks like this:

```
o OFF
  ON
   Default ---------------- unit
  OFF        |    |
```

Select the desired option with the ▲ ▼ buttons. Activate the option by pressing ↵.

8.3 Menu description

8.3.1 The main menus

After voltage has been applied to the laser, device information is displayed for several seconds. The display then shows the measurement window with all status information.

```
AMS 307i 120
Leuze electronic
          GmbH & Co. KG
SW: V 1.3.0   HW:1
SN: --------------
```

▲ ▼

Device information - main menu

This menu item contains detailed information on

- Device model,
- Manufacturer,
- Software and hardware version,
- Serial number.

No entries can be made via the display.

```
IO1  LSR  PLB
IO2  TMP  ATT
ERR                SSI

        + 87.000m
```

▲ ▼

Status and measurement data - main menu

- Display of status-, warning-, and error messages.
- Status overview of the switching inputs/outputs.
- Bar graph for the reception level.
- Measurement value.

No entries can be made via this mask.

See "Indicators in the display" on page 39.

```
Parameter
  Parameter handling
  SSI
  Position value
  I/O
  Other
```

▲ ▼

Parameter - main menu

- Configuration of the AMS.

See "Parameter menu" on page 44.

Language selection - main menu

- Selection of the display language.

See "Language selection menu" on page 48.

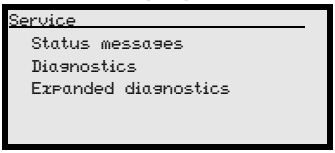

Service - main menu

- Display of status messages.
- Display of diagnostic data.

No entries can be made via the display.
See "Service menu" on page 48.

Notice!

***The rear cover** of this manual includes a **fold-out page** with the complete **menu structure**. It describes the menu items in brief.*

8.3.2 Parameter menu

Parameter handling submenu

The following functions can be called up in the Parameter handling submenu:

- Lock and enable parameter entry
- Set up a password
- Reset the AMS 307*i* to default settings.

Table 8.1: Parameter handling submenu

Level 3	Level 4	Level 5	Selection/configuration option Description	Standard
Parameter enabling			ON / OFF The standard setting (OFF) prevents unintended parameter changes. With parameter enabling activated (ON), the display is inverted. In this state, it is possible to change parameters manually.	OFF
Password	Activate password		ON / OFF To enter a password, parameter enabling must be activated. If a password is assigned, changes to the AMS 307*i* can only be made after the password is entered. The master password 2301 bridges the individually set password.	OFF
	Password entry		Configuration option of a four-digit numerical password	
Parameters to default			By pressing the enter button ↵ after selecting Parameters to default, all parameters are reset to their standard settings without any further security prompts. In this case, English is selected as the display language.	

Additional important information on parameter handling can be found at the end of the chapter.

SSI submenu

Table 8.2: SSI submenu

Level 3	Level 4	Level 5	Selection/configuration option Description	Standard
Activation			ON / OFF Activates or deactivates the AMS 307*i* as an SSI participant.	ON
Coding			Binary/gray Specifies the output format of the measurement value.	Gray
Number of data bits			24-bit/25-bit/26-bit The measurement value can be displayed on the SSI interface in this data width.	24 bit
SSI resolution			0.001 mm / 0.01 mm / 0.1 mm / 1 mm / 10 mm / free resolution The measurement value can be displayed in these resolutions.	0.1 mm
Error bit			ON/OFF This parameter determines whether an error bit is also attached to the "number of data bits". The error bit is the LSB and is not converted in the case of gray representation of the measurement value.	ON
Error bit function			The error bit can be set with the following status messages: Overflow / intensity (ATT) / temperature (TMP) /laser (LSR) / plausibility (PLB) / hardware (ERR) In the case of multiple namings, the individual states in the error bit are processed in an OR function.	Plausibility (PLB) Hardware (ERR)
Update rate			1.7 / 0.2 ms	1,7
Clock frequency			50 - 79 kHz / 80 - 800 kHz Selection of the clock frequency.	80 - 800 kHz

Position value submenu

Table 8.3: Position value submenu

Level 3	Level 4	Level 5	Selection/configuration option Description	Standard
Measurement unit			Metric/Inch Specifies the units of the measured distances	Metric
Count direction			Positive/Negative Positive: The measurement value begins at 0 and increases with increasing distance. Negative: The measurement value begins at 0 and decreases with increasing distance. Negative distance values may need to be compensated with an offset or preset.	Positive
Offset			Output value=measurement value+offset The resolution of the offset value is independent of the selected "Resolution position" and is entered in mm or inch/100. The offset value is effective immediately following entry. If the preset value is activated, this has priority over the offset. Preset and offset are not offset against each other.	0 mm
Preset			The preset value is accepted by means of teach pulse. The teach pulse can be applied to a hardware input of the M12 PWR connector. The hardware input must be appropriately configured. See also configuration of the I/Os.	0 mm

Table 8.3: Position value submenu

Level 3	Level 4	Level 5	Selection/configuration option Description	Standard
Error delay			ON / OFF Specifies whether, in the event of an error, the position value immediately outputs the value of the "Position value in the case of error" parameter or the last valid position value for the configured error delay time.	ON/100 ms
Position value in the case of error			Last valid value / zero Specifies which position value is output after the error delay time elapses.	Zero

I/O submenu

Table 8.4: I/O submenu

Level 3	Level 4	Level 5	Selection/configuration option Description	Standard
I/O 1	Port configuration		Input/Output Defines whether I/O 1 functions as an output or input.	Output
	Switching input	Function	No function/preset teach/laser ON/OFF	No function
		Activation	Low active/High active	Low active
	Switching output	Function	Pos. limit value 1 / Pos. limit value 2 / Velocity / Intensity (ATT) / Temp. (TMP) / Laser (LSR) / Plausibility (PLB) / Hardware (ERR) The individual functions are "ORed" on the selected switching output.	Plausibility (PLB), hardware (ERR)
		Activation	Low active/High active	Low active
I/O 2	Port configuration		Input/Output Defines whether I/O 2 functions as an output or input.	Output
	Switching input	Function	No function/preset teach/laser ON/OFF	No function
		Activation	Low active/High active	Low active
	Switching output	Function	Pos. limit value 1 / Pos. limit value 2 / Velocity / Intensity (ATT) / Temp. (TMP) / Laser (LSR) / Plausibility (PLB) / Hardware (ERR) The individual functions are "ORed" on the selected switching output.	Intensity (ATT), Temp. (TMP), Laser (LSR)
		Activation	Low active/High active	Low active
Limit values	Upper pos. limit 1	Activation	ON / OFF	OFF
		Limit value input	Value input in mm or inch/100	0
	Lower pos. limit 1	Activation	ON / OFF	OFF
		Limit value input	Value input in mm or inch/100	0
	Upper pos. limit 2	Activation	ON / OFF	OFF
		Limit value input	Value input in mm or inch/100	0
	Lower pos. limit 2	Activation	ON / OFF	OFF

Table 8.4: I/O submenu

Level 3	Level 4	Level 5	Selection/configuration option Description	Standard
		Limit value input	Value input in mm or inch/100	0
	Max. velocity	Activation	ON / OFF	OFF
		Max. velocity	Value input in mm/s or inch/100s	0

Other submenu

Table 8.5: Other submenu

Level 3	Level 4	Level 5	Selection/configuration option Description	Standard
Display illumination			10 minutes/ON Display illumination is switched off after 10 minutes or, if the parameter is set to "ON", illumination is always on.	10 min.
Display contrast			Weak/Medium/Strong The display contrast may change at extreme temperature values. The contrast can subsequently be adapted using the three levels.	Medium
Service RS232	Baud rate		57.6 kbit/s / 115.2 kbit/s The service interface is only available to Leuze internally.	115.2 kbit/s
	Format		8,e,1 / 8,n,1 The service interface is only available to Leuze internally.	8,n,1

8.3.3 Language selection menu

```
Language
selection
o Deutsch
● English
o Español
o Français
```

5 display languages are available:

- German
- English
- Spanish
- French
- Italian

The AMS 307*i* is delivered from the factory with the display preset to English.

To change the language, no password needs to be entered nor must password enabling be activated. The display language is a passive operational control and is, thus, not a function parameter, per se.

8.3.4 Service menu

```
Service
 Status messages
 Diagnostics
 Expanded diagnostics
```

A more detailed description of the individual functions can be found in chapter 10.

8.4 Operation

Described here is an operating process using parameter enabling as an example.

Parameter enabling

During normal operation parameters can only be viewed. If parameters are to be changed, the ON menu item in the Parameter -> Parameter handling -> Parameter enable menu must be activated. To do this, proceed as follows:

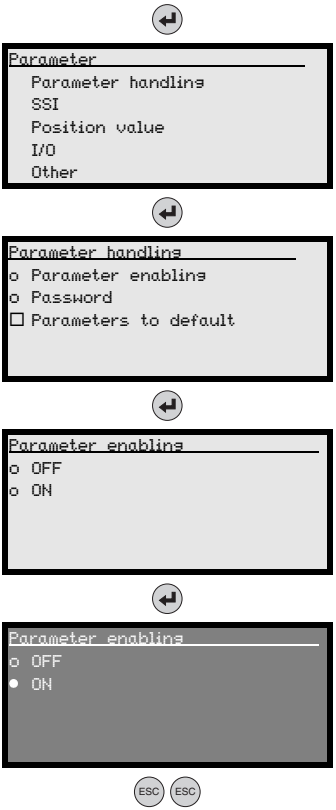

In the main menu, press the enter button to enter the Parameter menu.

Use the ▲ ▼ buttons to select the Parameter handling menu item.

Press the enter button to enter the Parameter handling menu.

In the Parameter handling menu, use the ▲ ▼ buttons to select the Parameter enabling menu item.

Press the enter button to enter the Parameter enabling menu.

In the Parameter enabling menu, use the ▲ ▼ buttons to select the ON menu item.

Press the enter button to switch on parameter enabling.

The PWR LED illuminates orange; the display is inverted. You can now set the individual parameters on the display.

Press the ESC button twice to return to the Parameter menu.

Viewing and editing parameters

As long as parameter enabling is activated, the entire AMS 307*i* display is inverted.

Notice!

If a password was stored, parameter enabling is not possible until this password is entered, see "Password for parameter enabling" below.

For the SSI interface, the communication between the control and the AMS 307*i* is also active the case of parameter enabling.

Notice!

Changes to the SSI parameters via display entry have immediate effect.

Password for parameter enabling

Parameter entry on the AMS 307*i* can be protected with a password.

If a password is assigned, parameter enabling must be activated via the password. If parameter enabling has been activated after successfully entering the password, parameters can be changed via the display.

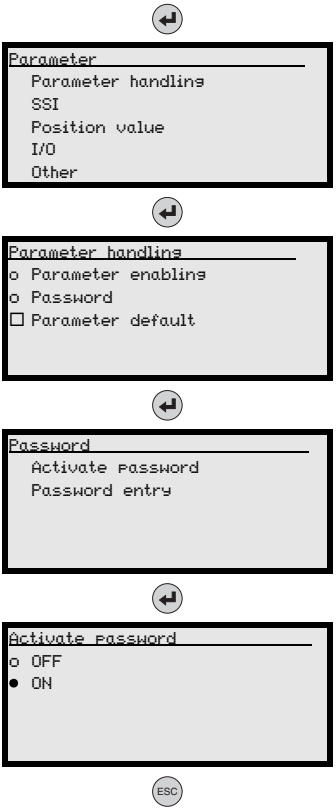

In the main menu, press the enter button to enter the Parameter menu.

Use the ▲▼ buttons to select the Parameter handling menu item.

Press the enter button to enter the Parameter handling menu.

In the Parameter handling menu, use the ▲▼ buttons to select the Password menu item.

Press the enter button to enter the Password menu.

In the Password menu, use the ▲▼ buttons to select the Activate password menu item.

Press the enter button to enter the Password menu.

In the Activate password menu, use the ▲▼ buttons to select the ON menu item and press the enter button

Press the ESC button to return to the Password menu.

In the Password menu, use the ▲ ▼ buttons to select the Password entry menu item.

Press the enter button to enter the Password menu.

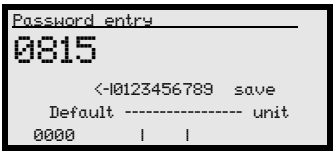

Now enter the password (digits).
See "Setting values" on page 42.

Press the ESC button twice to return to the Parameter menu.

Notice!

*The **master password 2301** can enable the AMS 307i at any time.*

9 SSI interface

9.1 Principle functionality of the SSI interface

Data communication of the SSI interface is based on differential transmission as is used for RS 422 interfaces. Transmission of the position value, beginning with the MSB (most significant bit), is thus synchronised with a clock cycle (CLOCK) specified by the control.

In the quiescent state, both the clock line as well as the data line are at HIGH level. At the first HIGH-LOW edge (point ① in figure 9.1) the data in the internal register are stored. This ensures that the data are not changed during serial transfer of the value.

When the next clock signal change from LOW to HIGH level (point ② in figure 9.1) occurs transmission of the position value begins with the most significant bit (MSB). With each subsequent change of the clock signal from LOW to HIGH level, the next least-significant bit is transmitted on the data line. After the least significant bit (LSB) has been output, the clock signal switches from LOW to HIGH for one last time and the data line switches to LOW level (end of transmission).

A monoflop retriggered by the clock signal determines the time span before the SSI interface can be called for the next transmission. This results in the minimum pause time between two successive clock cycles. If time tm = 20µs has elapsed, the data line is returned to the quiescent level (HIGH) (point ③ in figure 9.1). This signals completed data communication and that the device is again ready for transmission.

Notice!

If the off-cycle of data transmission is interrupted for longer than t_m = 20µs, the next cycle will begin with a completely new transmission cycle with a newly calculated value.

If a new transmission cycle is started before time t_m has elapsed, the previous value is output again.

Attention!

The SSI interface can only represent positive distance values. If negative output values are ascertained due to the offset or count direction, a zero value is output at the SSI interface! In the event of a number overflow, all data bits are set to "1".

9.1.1 SSI sequence diagram

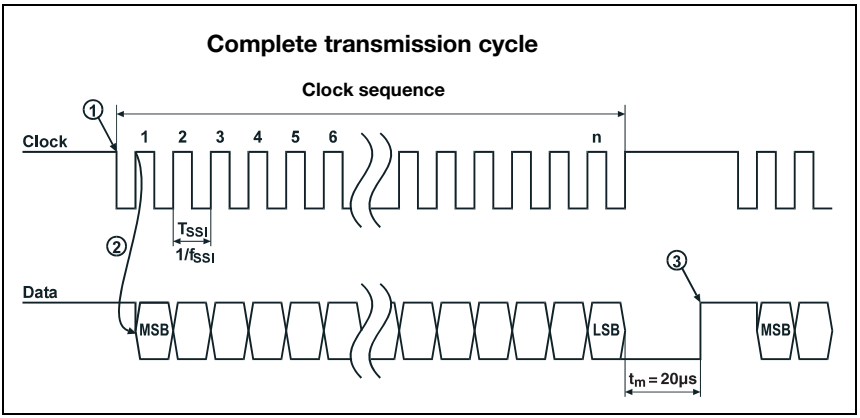

Figure 9.1: SSI data transmission sequence diagram

Notice!

*In the default setting the **LSB** bit is the error bit.*

Attention!

***Significance of the error bit**:*
By default a 25th error bit (LSB) is appended to the 24-bit measurement value.
The error bit is not included in the Gray encoding of the measurement value.
The error bit is 1 = active, 0 = not active.

Notice!

The data can be read out with a clock rate between 80kHz and 800kHz.

Attention!

***Updating the measurement values on the SSI interface of the** AMS 307**i**:*
*The measurement value on the SSI interface of the AMS 307**i** is updated every 1.7ms (default) independent of the clock frequency.*
The update rate on the interface can be reduced to 0.2ms via the display under the SSI menu item.

9.1.2 Cable length as a function of the data rate

Only shielded and twisted pair lines (pin 1 with 2 and pin 3 with 4) are permitted as data lines for the SSI interface (see chapter 9.2 "SSI - electrical connection").

- *The shielding must be connected at both ends.*
- *Do not lay the cable parallel to power cables.*

The maximum possible cable length is dependent on the cable used and the clock rate:

Data rate	80kBit/s	100kBit/s	200kBit/s	300kBit/s	400kBit/s	500kBit/s	1,000kBit/s
Max. cable length (typical)	500m	400m	200m	100m	50m	25m	10m

Table 9.1: Max. cable length as a function of the clock rate

9.2 SSI - electrical connection

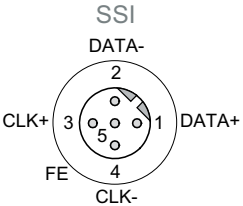

SSI connector (5-pin plug, B-coded)		
Pin	**Name**	**Remark**
1	**DATA+**	+ Data line SSI (output)
2	**DATA-**	- Data line SSI (output)
3	**CLK+**	+ Clock line SSI (input electrically insulated)
4	**CLK-**	- Clock line SSI (input electrically insulated)
5	**FE**	Functional earth
Thread	**FE**	Functional earth (housing)

Figure 9.2: SSI - electrical connection

Notice!

To connect the SSI interface we recommend our ready-made SSI cables, see chapter 11.4.5.

9.3 Default settings of the SSI interface

Default parameters of the SSI interface	
SSI activation	ON
Measurement value coding	Gray
Transmission mode	24-bit measurement value + 1-bit error (error: 1 = active), error bit = LSB
Resolution	0.1 mm
Default error bit	Plausibility error or hardware error
Update rate	1.7 ms
Measurement unit	Metric
Count direction	Positive (the SSI interface cannot represent negative values)
I/O 1	Output – plausibility error or hardware error
I/O 2	Output – temperature error, intensity error or laser prefailure message
Static preset	+000.000
Dynamic preset	+000.000
Position limit value range 1	Lower limit and upper limit: both 0
Position limit value range 2	Lower limit and upper limit: both 0
Error handling procedures	Position output: 0
	Suppress position status: active
	Position suppression time: 100 ms
Display language	English
Display illumination	OFF after 10 min.
Display contrast	Medium
Password protection	Off
Password	0000

Table 9.2: Default settings of the SSI interface

9.3.1 Changing the SSI settings via the display

Notice!

For basic operation of the display please refer to chapter 8.2.3.
In order to change the parameters please activate parameter enabling.
The SSI interface remains active even during parameter enabling. Changes to parameters have an immediate effect.

10 Diagnostics and troubleshooting

10.1 Service and diagnostics in the display of the AMS 307*i*

In the main menu of the AMS 307*i*, expanded "Diagnostics" can be called up under the Service heading.

```
Service
 Status messages
 Diagnostics
 Expanded diagnostics
```

From the Service main menu, press the enter button ↵ to access the underlying menu level.

Use the up/down buttons ▲ ▼ to select the corresponding menu item in the selected level; use the enter button ↵ to activate the selection.

Return from any sub-level to the next-higher menu item by pressing the ESC button ESC.

10.1.1 Status messages

The status messages are written in a ring memory with 25 positions. The ring memory is organized according to the FIFO principle. No separate activation is necessary for storing the status messages. Power OFF clears the ring memory.

```
Status messages
1: - / - / -
2: - / - / -
3: - / - / -
```

Basic representation of the status messages

n: Type / No. / 1

Meaning:

n: memory position in the ring memory

Type: type of message:
I = info, **W** = warning, **E** = error, **F** = severe system error.

No: internal error detection

1: frequency of the event (always "1", since no summation occurs)

The status messages within the ring memory are selected with the up/down buttons ▲ ▼. The enter button ↵ can be used to call up **detailed information** on the corresponding status messages with the following details:

Detailed information about a status message

Type: type of message + internal counter

UID: Leuze internal coding of the message

ID: description of the message

Info: not currently used

Within the detailed information, the enter button ↵ can be pressed again to activate an **action menu** with the following functions:

- Acknowledge message
- Delete message
- Acknowledge all
- Delete all

10.1.2 Diagnostics

The diagnostics function is activated by selecting the `Diagnostics` menu item. The ESC button (ESC) deactivates the diagnostics function and clears the contents of the recordings.

The recorded diagnostic data are displayed in 2 fields. In the upper half of the display, status messages of the AMS 307*i* and the bar graph are displayed. The lower half contains information that assists in a Leuze-internal evaluation.

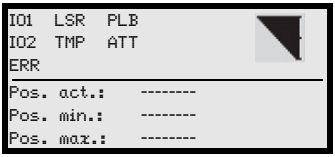

Use the up/down buttons (▲) (▼) to scroll in the bottom half between various displays. The contents of the scrollable pages are intended solely for Leuze for internal evaluation.

The diagnostics have no influence on the communication to the host interface and can be activated during operation of the AMS 307*i*.

10.1.3 Expanded diagnostics

The `Expanded diagnostics` menu item is used for Leuze-internal evaluation.

10.2 General causes of errors

10.2.1 Power LED

See also chapter 8.2.2.

Error	Possible error cause	Measure
PWR LED "OFF"	No supply voltage connected	Check supply voltage.
	Hardware error	Send in device.
PWR-LED "flashes red"	Light beam interruption	Check alignment.
	Plausibility error	Traverse rate >10m/s.
PWR-LED "static red"	Hardware error	For error description, see display, It may be necessary to send in the device.

Table 10.1: General causes of errors

10.3 Interface errors

10.3.1 BUS LED

Error	Possible error cause	Measure
BUS LED "OFF"	No supply voltage connected	Check supply voltage.
	Incorrect wiring	Check wiring.
	SSI deactivated	Activate SSI interface in the AMS 307*i*.

Table 10.2: Bus error

10.4 Status display in the display of the AMS 307*i*

Display	Possible error cause	Measure
PLB (implausible measurement values)	Laser beam interruption	Laser spot must always be incident on the reflector.
	Laser spot outside of reflector	Traverse rate < 10 m/s?
	Measurement range for maximum distance exceeded	Restrict traversing path or select AMS with larger measurement range.
	Velocity greater than 10 m/s	Reduce velocity.
	Ambient temperature far outside of the permissible range (TMP display; PLB)	Provide cooling.
ATT (insufficient received signal level)	Reflector soiled	Clean reflector or glass lens.
	Glass lens of the AMS soiled	
	Performance reduction due to snow, rain, fog, condensing vapor, or heavily polluted air (oil mist, dust)	Optimize usage conditions.
	Laser spot only partially on the reflector	Check alignment.
	Protective foil on the reflector	Remove protective foil from reflector.
TMP (operating temperature outside of specification)	Ambient temperatures outside of the specified range	In case of low temperatures, remedy may be an AMS with heating. If temperatures are too high, provide cooling or change mounting location.
LSR Laser diode warning	Laser diode prefailure message	Send in device at next possible opportunity to have laser diode replaced. Have replacement device ready.
ERR Hardware error	Indicates an uncorrectable error in the hardware	Send in device for repair.

Notice!

*Please use **chapter 10 as a master copy** should servicing be required.*
Cross the items in the "Measures" column which you have already examined, fill out the following address field and fax the pages together with your service contract to the fax number listed below.

Customer data (please complete)

Device type:	
Company:	
Contact person / department:	
Phone (direct dial):	
Fax:	
Street / No:	
ZIP code/City:	
Country:	

Leuze Service fax number:

+49 7021 573 - 199

11 Type overview and accessories

11.1 Part number code

AMS 3xx *i* yyy

Range	40	Max. operating range in m
	120	Max. operating range in m
	i =	Integrated fieldbus technology
Interface	07	SSI interface
	AMS	**A**bsolute **M**easuring **S**ystem

11.2 Type overview AMS 307*i* (SSI)

Type designation	Description	Part no.
AMS 307*i* 40	40 m operating range, SSI interface	50137593
AMS 307*i* 120	120 m operating range, SSI interface	50137594

Table 11.1: Type overview AMS 307*i*

11.3 Overview of reflector types

Type designation	Description	Part no.
Reflective tape 200x200-S	Reflective tape, 200 x 200 mm, self-adhesive	50104361
Reflective tape 500x500-S	Reflective tape, 500 x 500 mm, self-adhesive	50104362
Reflective tape 914x914-S	Reflective tape, 914 x 914 mm, self-adhesive	50108988
Reflective tape 200x200-M	Reflective tape, 200 x 200 mm, affixed to aluminum plate	50104364
Reflective tape 500x500-M	Reflective tape, 500 x 500 mm, affixed to aluminum plate	50104365
Reflective tape 914x914-M	Reflective tape, 914 x 914 mm, affixed to aluminum plate	50104366
Reflective tape 200x200-H	Heated reflective tape, 200 x 200 mm	50115020
Reflective tape 500x500-H	Heated reflective tape, 500 x 500 mm	50115021
Reflective tape 914x914-H	Heated reflective tape, 914 x 914 mm	50115022

Table 11.2: Overview of reflector types

11.4 Accessories

11.4.1 Accessory mounting bracket

Type designation	Description	Part no.
MW OMS/AMS 01	Mounting bracket for mounting the AMS 307*i* to horizontal surfaces	50107255

Table 11.3: Accessory mounting bracket

11.4.2 Accessory deflector unit

Type designation	Description	Part no.
US AMS 01	Deflector unit with integrated mounting bracket for the AMS 307*i*. Variable 90° deflection of the laser beam in various directions	50104479
US 1 OMS	Deflector unit without mounting bracket for simple 90° deflection of the laser beam	50035630

Table 11.4: Accessory deflector unit

11.4.3 Accessory M12 connector

Type designation	Description	Part no.
KD 02-5-BA	M12 connector, B-coded socket, SSI	50038538
KD 095-5A	M12 connector, A-coded socket, Power (PWR)	50020501

Table 11.5: Accessory M12 connector

11.4.4 Accessory ready-made cables for voltage supply

Contact assignment/wire color of PWR connection cable

PWR connection cable (5-pin socket, A-coded)			
PWR 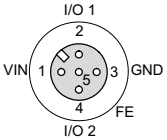 **M12 socket (A-coded)**	**Pin**	**Name**	**Core color**
	1	VIN	**brown**
	2	I/O 1	**white**
	3	GND	**blue**
	4	I/O 2	**black**
	5	FE	**gray**
	Thread	FE	**bare**

Specifications of the cables for voltage supply

Operating temperature range in rest state: -30°C … +70°C
in motion: -5°C … +70°C

Material sheathing: PVC

Bending radius > 50 mm

Order codes of the cables for voltage supply

Type designation	Description	Part no.
KD U-M12-5A-V1-050	M12 socket, A-coded, axial plug outlet, open cable end, cable length 5 m	50132079
KD U-M12-5A-V1-100	M12 socket, A-coded, axial plug outlet, open cable end, cable length 10 m	50132080

11.4.5 Accessory ready-made cables for the SSI interface

General

- **KB SSI…** cable for connecting to the SSI M12 connector
- Standard cables available in lengths from 2 … 30m
- Special cables on request.

Contact assignments of SSI connection cable

SSI/IBS connection cable (5-pin socket, B-coded)			
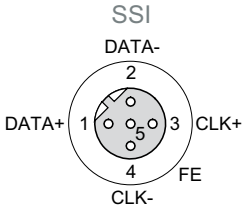 **M12 socket (B-coded)**	**Pin**	**Name**	**Core color**
	1	DATA+	**yellow**
	2	DATA-	**Green**
	3	CLK+	**gray**
	4	CLK-	**pink**
	5	FE	**brown**
	Thread	FE	**bare**

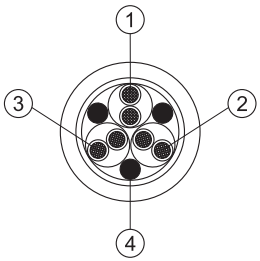

1 Conductor pair with **white/brown** insulation
2 Conductor pair with **green/yellow** insulation
3 Conductor pair with **gray/pink** insulation
4 Filler (polyester threads)

All conductor pairs stranded,
colors in accordance with DIN 47100

Specifications of the SSI connection cable

Operating temperature range	in rest state: -40°C … +80°C in motion: -5°C … +80°C
Material	free of halogens, silicone and PVC
Bending radius	> 80mm, suitable for drag chains

Order codes for SSI connection cables

Type designation	Remark	Part no.
KB SSI/IBS-2000-BA	M12 socket, B-coded, for SSI/Interbus, axial connector, open cable end, cable length 2m	50104172
KB SSI/IBS-5000-BA	M12 socket, B-coded, for SSI/Interbus, axial connector, open cable end, cable length 5m	50104171
KB SSI/IBS-10000-BA	M12 socket, B-coded, for SSI/Interbus, axial connector, open cable end, cable length 10m	50104170
KB SSI/IBS-15000-BA	M12 socket, B-coded, for SSI/Interbus, axial connector, open cable end, cable length 15m	50104169
KB SSI/IBS-20000-BA	M12 socket, B-coded, for SSI/Interbus, axial connector, open cable end, cable length 20m	50104168
KB SSI/IBS-25000-BA	M12 socket, B-coded, for SSI/Interbus, axial connector, open cable end, cable length 25m	50108447
KB SSI/IBS-30000-BA	M12 socket, B-coded, for SSI/Interbus, axial connector, open cable end, cable length 30m	50108446

12 Maintenance

12.1 General maintenance information

With normal use, the laser measurement system does not require any maintenance by the operator.

Cleaning

In the event of dust build-up or if the (ATT) warning message is displayed, clean the device with a soft cloth; use a cleaning agent (commercially available glass cleaner) if necessary.

Also check the reflector for possible soiling.

Attention!

Do not use solvents and cleaning agents containing acetone. Use of such solvents could blur the reflector, the housing window and the display.

12.2 Repairs, servicing

Attention!

Access to or changes on the device, except where expressly described in this operating manual, are not authorized.
The device must not be opened. Failure to comply will render the guarantee void. Warranted features cannot be guaranteed after the device has been opened.

Repairs to the device must only be carried out by the manufacturer.

↳ *Contact your Leuze distributor or service organization should repairs be required. The addresses can be found on the inside of the cover and on the back.*

Notice!

When sending the laser measurement systems to Leuze electronic for repair, please provide an accurate description of the error.

12.3 Disassembling, packing, disposing

Repacking

For later reuse, the device is to be packed so that it is protected.

Notice!

Electrical scrap is a special waste product! Observe the locally applicable regulations regarding disposal of the product.

A
Accessories 60
Accessory deflector unit 61
Accessory mounting bracket 61
Accessory ready-made cables 62
Accuracy 13
Air humidity 14
Alignment 19

B
BUS LED 41

C
Cleaning 65
Connections
PWR IN 37
Service 38
SSI 37
contouring error calculation 13
Control buttons 42
Control panel 39

D
Declaration of conformity 4
Deflector unit
Maximum ranges 23
With integrated mounting bracket 23
Without mounting bracket 25
Deflector unit US 1 OMS
Dimensioned drawing 25
Deflector unit US AMS 01
Dimensioned drawing 24
Description of functions 5
Diagnostics 56
Dimensioned drawing of AMS 3xxi 15
Display 39

E
Electrical connection 36
Safety notices 36
Expanded diagnostics 57
Explanation of symbols 4

F
Fast commissioning 11

G
General causes of errors 58

H
Heated reflectors
Dimensioned drawing 30
Technical data 29

I
Installation 17
Interface errors 58
Interface info in display 40
Internal hardware error 40

L
LSR status display 59

M
Main menu
Device information 43
Language selection 44
Parameter 43
Service 44
Maintenance 65
Measurement range 13
Menus
Language selection menu 48
Main menu 43
Parameter menu 44
Service menu 48
Mounting 18
with laser beam deflector unit 23
Mounting bracket(optional) 20

N
Name plates 17

O
Operating principle 11
Operating temperature 14
Operation 39, 49
Output time 13
Overview of reflector types 60

P
Packaging 17
Parallel mounting 21
Parameter enabling 49, 50
Parameter menu
I/O 46
Other 47
Parameter handling 44
Position value 45
SSI 45
Plausibility error 40
Prefailure message 39
PWR LED 41

Q
Quality assurance 4

R
Range 60
Received signal 40
Reflective tape
Dimensioned drawing 28
Technical data 27
Reflector 26
Mounting 32
Pitch 35
Size 31
Type overview 31
Repair 65
Response time 13

S
Servicing 65
SSI 52
Default settings 55
Electrical connection 54
Status and measurement data - main menu 43
Status- and warning messages 39
Status display 39
ATT 59
ERR 59
PLB 59
TMP 59
Status display in the display 59
Status displays 41
Status messages 56
Storage 17
Storage temperature 14
Supply voltage 13
Surface reflections 33
Symbols 4

T
Technical data 13
Dimensioned drawing 15
General specifications 13
Reflective tapes 26
Temperature monitoring 39
Transport 17
Troubleshooting 56
Type overview 16, 60

Level 1 ▲▼ : selection	Level 2 ▲▼ : selection ESC : back	Level 3 ▲▼ : selection ESC : back	Level 4 ▲▼ : selection ESC : back	Level 5 ▲▼ : selection ESC : back	Selection/configuration option ▲▼ : selection ↵ : activate ESC : back	Detailed information on
Device information						page 43
Network information						page 43
Status- and measurement data						page 43
Parameter ↵	Parameter handling	↵ Parameter enabling			ON / OFF	page 44
		↵ Password	↵ Activate password		ON / OFF	
			↵ Password entry		Configuration option of a four-digit numerical password	
		↵ Parameters to default			All parameters are reset to their factory settings	
	↵ SSI	↵ Activation			ON / OFF	page 45
		↵ Coding			Binary/gray	
		↵ Number of data bits			24-bit/25-bit/26-bit	
		↵ SSI resolution			0.001 mm / 0.01 mm / 0.1 mm / 1 mm / 10 mm / free resolution	
		↵ Error bit			ON / OFF	
		↵ Error bit function			overflow, intensity (ATT) temp. (TMP) laser (LSR) plausibility (PLB) hardware (ERR)	
		↵ Update rate			1.7 ms / 0.2 ms	
		↵ Clock frequency			80 kHz - 800 kHz, 20 us / 50 kHz - 79 kHz, monoflop time 30 us	
	↵ Position value	↵ Measurement unit			Metric/Inch	page 45
		↵ Count direction			Positive/Negative	
		↵ Offset			Value input:	
		↵ Preset			Value input	
		↵ Error delay			ON / OFF	
		↵ Position value in the case of error			Last valid value / zero	
	↵ I/O	↵ I/O 1	↵ Port configuration		Input/Output	page 46
			↵ Switching input	↵ Function	No function/preset teach/laser ON/OFF	
				↵ Activation	Low active/High active	
			↵ Switching output	↵ Function	Pos. limit value 1 / Pos. limit value 2 / Velocity / Intensity (ATT) / Temp. (TMP) / Laser (LSR) / Plausibility (PLB) / Hardware (ERR)	
				↵ Activation	Low active/High active	
		↵ I/O 2	↵ Port configuration		Input/Output	
			↵ Switching input	↵ Function	No function/preset teach/laser ON/OFF	
				↵ Activation	Low active/High active	
			↵ Switching output	↵ Function	Pos. limit value 1 / Pos. limit value 2 / Velocity / Intensity (ATT) / Temp. (TMP) / Laser (LSR) / Plausibility (PLB) / Hardware (ERR)	
				↵ Activation	Low active/High active	

			Limit values	Upper pos. limit 1	Activation	ON / OFF	
					Limit value input	Value input in mm or inch/100	
				Lower pos. limit 1	Activation	ON / OFF	
					Limit value input	Value input in mm or inch/100	
				Upper pos. limit 2	Activation	ON / OFF	
					Limit value input	Value input in mm or inch/100	
				Lower pos. limit 2	Pos limit value active.	ON / OFF	
					Position value	Value input in mm or inch/100	
				Max. velocity	Activation	ON / OFF	
					Max. velocity	Value input in mm/s or inch/100s	
		Other	Display background			10 minutes/ON	page 47
			Display contrast			Weak/Medium/Strong	
			Service RS232	Baud rate		57.6 kbit/s / 115.2 kbit/s	
				Format		8,e,1 / 8,n,1	
Language selection						Deutsch / English / Español / Français / Italiano	page 48
Service		Status messages				Number of readings, reading gates, reading rate / non-reading rate etc.	page 48
		Diagnostics				Exclusively for service purposes by Leuze electronic	
		Expanded diagnostics				Exclusively for service purposes by Leuze electronic	