Leuze

Ultrasonic label fork

GSU 12

ПРОМЭЛЕКТРОНИКА / sales@prom-elec.com

We reserve the right to make changes – 2020/03/17 – 50143644

Leuze electronic GmbH + Co. KG
In der Braike 1 73277 Owen Tel.: +49 7021 573-0
info@leuze.com • www.leuze.com

1

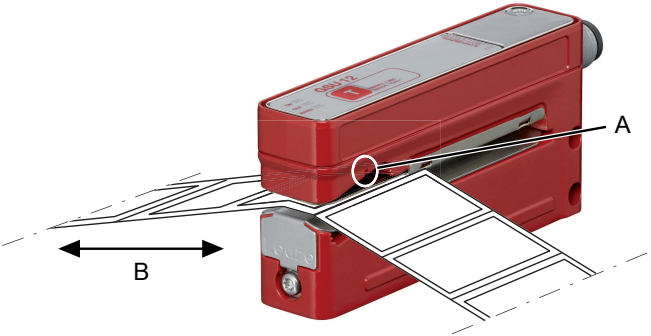

2

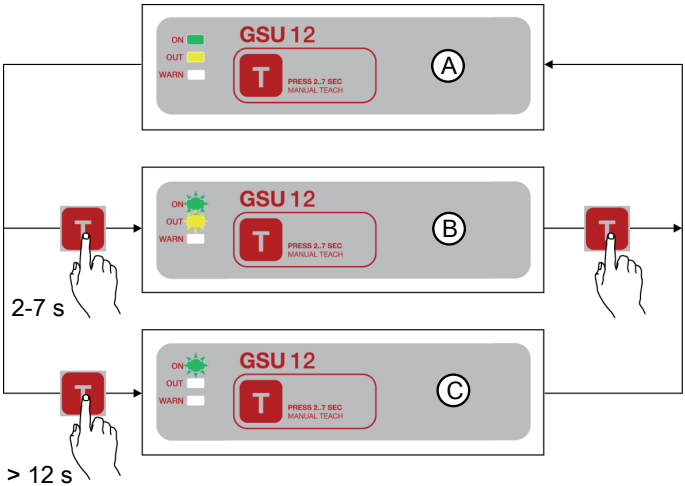

3

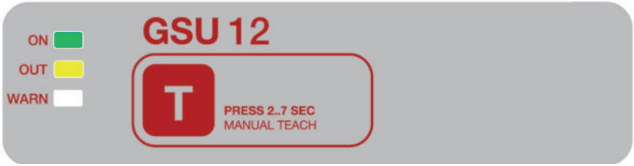
ON
OUT
WARN
GSU 12
T
PRESS 2..7 SEC
MANUAL TEACH

4

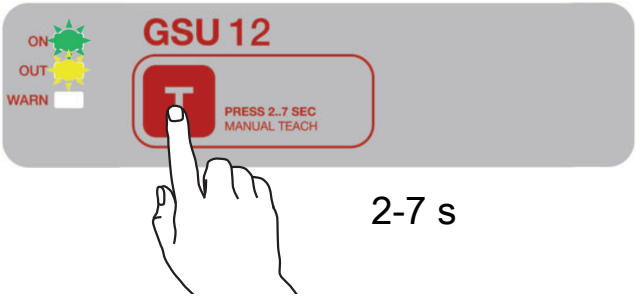
ON
OUT
WARN
GSU 12
T
PRESS 2..7 SEC
MANUAL TEACH
2-7 s

5

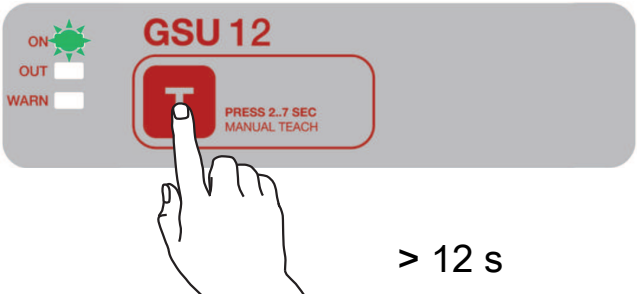
ON
OUT
WARN
GSU 12
T
PRESS 2..7 SEC
MANUAL TEACH
> 12 s

ПРОМЭЛЕКТРОНИКА / sales@prom-elec.com

Intended use

The ultrasonic label forks are ultrasonic sensors for contactless detection of the gap between two consecutive labels on a carrier tape.

	NOTICE
!	**Observe intended use!** This product is not a safety sensor and is not intended as personnel protection. ↳ Only allow competent persons to put the product into operation. ↳ Only use the product in accordance with its intended use.

Function and device operation

The label material used determines the achievable precision and the reliability of gap detection between labels.

- Light switching: signal in the label gap.
- Dark switching: signal on the label.

1

A	Label center position
B	Label run

↳ To achieve a high switching accuracy, place the label tape on the lower fork with slight tension.

↳ Align the label tape with the "Label center position" marking.

Overview of operating structure

2

A	Standard function Normal operation after switch-on
B	Manual teach Can be executed as dynamic teach
C	Set switching behavior (light/dark switching)

Standard function

During operation the sensor is always in this function.
The sensor detects label gaps with high precision and speed.
This is indicated by the yellow OUT LED and the switching output.

3

ON LED green	Constantly ON when operating voltage is applied.
OUT LED yellow	Indicates the switching signal. LED is ON if the sensor detects label gaps. The display is independent of the output setting.
WARN LED continuous red light	OFF: error-free operation. ON: teaching error caused by unfavorable label material.

Manual teach while the label tape is passing through (dynamic)

Sensor setting via teach button

Preparation: Insert label tape into the sensor.

4

- Press the teach button until the green ON LED and the yellow OUT LED flash synchronously.
- Release the teach button.
- Allow the label tape to advance through the sensor at a maximum speed of 50 m/min. The sensor indicates the belt transport by a more rapid synchronous flashing of the green ON LED and yellow OUT LED.
- Briefly press the teach button to end the manual teach. The sensor switches to the standard function.

Approx. 3 … 7 labels should be advanced through the sensor in order to achieve stable switching points. The number of labels to be transported is always based on the material combination.

If the teach event is faulty (e.g. unfavorable material combination, uneven transport, jittering during transport), the red WARN LED illuminates.

- Repeat the teach event.

If the fault cannot be rectified, the label material cannot be detected with the device.

	NOTICE
i	During the manual teach process, a 2-point calibration is performed on the carrier and the label.

Adjusting the switching behavior of the switching output (light/dark switching)

5

- Press the teach button until only the green ON LED flashes.
- Release the teach button.

The green ON LED flashes for another 2 seconds and the yellow OUT LED indicates the changed switching behavior for 2 seconds:

- Yellow OUT LED ON: switching output, light switching (signal in the label gap)
- Yellow OUT LED OFF: switching output, dark switching (signal on the label)