SMART
SENSOR
BUSINESS

Leuze electronic

the sensor people

BCL 8

Bar code reader with integrated decoder

EN 2020/02/04 50127073
We reserve the right to make technical changes

Original operating instructions

ПРОМЭЛЕКТРОНИКА / sales@prom-elec.com

© 2020
Leuze electronic GmbH + Co. KG
In der Braike 1
D-73277 Owen / Germany
Phone: +49 7021 573-0
Fax: +49 7021 573-199
http://www.leuze.com
info@leuze.de

1 General information ... 4

1.1 Explanation of symbols ... 4

1.2 Declaration of Conformity ... 4

2 Safety ... 5

2.1 Intended use ... 5

2.2 Foreseeable misuse ... 6

2.3 Competent persons ... 6

2.4 Exemption of liability ... 7

2.5 Laser safety notices ... 7

3 Description ... 11

3.1 The BCL 8 bar code reader ... 11

3.2 Stand alone operation ... 12

3.3 Daisy chain network ... 12

4 Technical data ... 13

4.1 General specifications BCL 8 ... 13

4.2 LED indicators ... 14

4.3 Dimensioned and connection drawings ... 15

4.4 Optical data ... 17

4.4.1 Type overview ... 17

4.4.2 Reading fields ... 18

5 Accessories/order codes ... 20

5.1 Accessories overview ... 20

5.2 MA 8.1 connection unit ... 21

5.2.1 Electrical connection MA 8.1 ... 22

5.2.2 MA 8.1 - PWR IN HOST/RS232 - voltage supply and RS 232 ... 23

5.2.3 MA 8.1 - SW IN/OUT – switching input and switching output ... 23

5.2.4 MA 8.1 - BCL - connecting the BCL 8 to the MA 8.1 ... 25

5.3 Connection unit MA 8-01 ... 26

5.3.1 MA 8-01 - PWR IN HOST/RS485 - Voltage supply and RS 485 ... 27

5.3.2 MA 8-01 - SW IN/OUT - switching input and switching output ... 28

5.3.3 MA 8-01 - BCL - connecting the BCL 8 to the MA 8-01 ... 29

5.3.4 Termination of the RS 485 interface ... 30

5.4 Mounting accessories ... 31

6 Installation ... 32

6.1 Storage, transportation ... 32

6.2 Mounting ... 33

6.2.1 Device arrangement ... 33

6.3 Connection ... 35

6.3.1 Connecting the BCL 8 35
6.3.2 Connecting the switching input/output 36
6.3.3 Cable lengths 38
6.4 Disassembling, packing, disposing 38

7 Commissioning 39

7.1 Measures to be performed prior to the initial commissioning 39
7.2 Function Test 39
7.3 Setting the parameters 40
7.3.1 Parameter sets 40
7.3.2 Service operating mode 41

8 Operation 42

8.1 Display elements 42
8.2 Error handling 43

9 Communication with the device 44

9.1 Installing the BCLConfig software 44

10 Important parameters 46

10.1 Decode tab 46
10.1.1 Properties window – Decode tab 47
10.2 Output tab 48
10.3 Control tab 49
10.4 Host interface tab 51
10.4.1 Properties window – Host interface tab 52
10.5 Reference code tab 53
10.6 Switching input tab 54
10.7 Laser tab 55
10.8 Switch tab 57

11 Online commands 58

11.1 Overview of commands and parameters 58
11.1.1 General online commands 59
11.1.2 Online commands for system control 65
11.1.3 ’Online’ commands for parameter set operations 66

12 Maintenance 70

12.1 General maintenance information 70
12.2 Repairs, servicing 70
12.3 Diagnostics and troubleshooting 71
12.4 Example bar code label types 72

Figure 2.1: Laser apertures, laser warning signs ... 9
Figure 2.2: Laser warning and information signs – supplied stick-on labels ... 10
Figure 3.1: Device construction of the BCL 8 ... 11
Table 4.1: Technical data ... 13
Table 4.2: LED indicators ... 14
Figure 4.1: Dimensioned drawing BCL 8 S M …0, BCL 8 S N …0 with lateral beam exit ... 15
Figure 4.2: Dimensioned drawing BCL 8 S M …2, BCL 8 S N …2 with front beam exit ... 16
Table 4.3: Type overview - M optics ... 17
Table 4.4: Type overview - N optics ... 17
Figure 4.3: Reading field of BCL 8 S M … with M optics (medium density) ... 18
Figure 4.4: Reading field of BCL 8 S N … with N optics (high density) ... 19
Table 5.1: Accessories/order codes ... 20
Figure 5.1: Photo and dimensioned drawing of the MA 8.1 connection unit ... 21
Figure 5.2: Electrical connection MA 8.1 ... 22
Figure 5.1: MA 8.1 - Pin assignment PWR IN HOST/RS232 ... 23
Figure 5.1: MA 8.1 - Pin assignment SW IN/OUT ... 23
Figure 5.2: Connection of the switching input/output of the MA 8.1 ... 24
Figure 5.1: MA 8.1 - Pin assignment BCL ... 25
Figure 5.2: Pin assignment - MA 8-01 ... 26
Figure 5.1: MA 8-01 - Pin assignment PWR IN HOST/RS485 ... 27
Figure 5.1: MA 8-01 - Pin assignment SW IN/OUT ... 28
Figure 5.2: Electrical connection MA 8-01 ... 29
Figure 5.1: MA 8-01 - Pin assignment BCL ... 29
Figure 5.2: Termination of the RS 485 interface in the MA 8-01 ... 30
Figure 5.3: Universal rod mounting system for BCL 8 ... 31
Figure 6.1: BCL 8 device name plate ... 32
Figure 6.2: Definition of the BCL 8 reading angles ... 34
Figure 6.3: BCL 8 pin assignment ... 35
Table 6.1: Wiring description BCL 8 ... 35
Figure 6.4: Switching input for BCL 8 connection version 1 (standard setting) ... 36
Figure 6.5: Switching input for BCL 8 connection version 2 (setting "inverted") ... 36
Figure 6.6: Switching output BCL 8 ... 37
Table 6.2: Cable lengths ... 38
Figure 7.1: Bar code label "Service" ... 41
Figure 7.2: Connecting the RS 232 interface to a PC or terminal ... 41
Figure 9.1: Installation window ... 44
Figure 9.2: Installation directory ... 45
Figure 9.3: BCL 8 configuration software ... 45
Figure 10.1: Decode tab ... 46
Figure 10.2: Standard settings for the Properties window – Decode tab ... 47
Figure 10.3: Output tab ... 48
Figure 10.4: Control tab ... 49
Figure 10.5: Host interface tab ... 51
Figure 10.6: Standard settings for the Properties window – Host interface tab ... 52
Figure 10.7: Reference code tab ... 53
Figure 10.8: Switching input tab ... 54
Figure 10.9: Laser tab ... 55
Figure 10.10: AutoReflAct Wizard ... 56
Figure 10.11: Switch tab ... 57
Figure 12.1: Example bar code label types ... 72

1 General information

1.1 Explanation of symbols

The symbols used in this technical description are explained below.

⚠ ATTENTION!	
	This symbol precedes text messages which must strictly be observed. Failure to observe the provided instructions could lead to personal injury or damage to equipment.

⚠ ATTENTION, LASER RADIATION – CLASS 2 LASER PRODUCT	
	This symbol warns of possible danger caused by hazardous laser radiation.

NOTE	
	This symbol indicates text passages containing important information.

1.2 Declaration of Conformity

The BCL 8 bar code reader and the optional MA 8.1 connection unit have been developed and produced in accordance with the applicable European standards and directives.

NOTE	
	The corresponding declaration of conformity can be requested from the manufacturer.

The manufacturer of the product, Leuze electronic GmbH & Co. KG in D-73277 Owen, possesses a certified quality assurance system in accordance with ISO 9001.

2 Safety

This sensor was developed, manufactured and tested in line with the applicable safety standards. It corresponds to the state of the art.

2.1 Intended use

The BCL 8 bar code reader is designed as a stationary scanner with integrated decoder for all common bar codes used for automatic object detection.

The optional MA 8.1 connection unit is intended for the easy connection of a bar code reader of type BCL 8.

Areas of application

The BCL 8 bar code reader with optional MA 8.1 connection unit is designed especially for the following fields of application:

- Labeling and packaging machines
- Automatic analyzers
- For space-critical bar code reading tasks
- Material flow
- Pharmaceutical industry
- Robotics and automation technology

CAUTION!

Observe intended use!

- Only operate the device in accordance with its intended use.
  The protection of personnel and the device cannot be guaranteed if the device is operated in a manner not complying with its intended use.
  Leuze electronic GmbH + Co. KG is not liable for damages caused by improper use.
- Read the technical description before commissioning the device.
  Knowledge of this technical description is an element of proper use.

NOTE

Comply with conditions and regulations!

- Observe the locally applicable legal regulations and the rules of the employer's liability insurance association.

ATTENTION!

For UL applications, use is only permitted in Class 2 circuits in accordance with the NEC (National Electric Code).

2.2 Foreseeable misuse

Any use other than that defined under "Intended use" or which goes beyond that use is considered improper use.

In particular, use of the device is not permitted in the following cases:

- in rooms with explosive atmospheres
- as stand-alone safety component in accordance with the machinery directive [1)]
- for medical purposes

NOTE	
	Do not modify or otherwise interfere with the device! ↳ Do not carry out modifications or otherwise interfere with the device. The device must not be tampered with and must not be changed in any way. The device must not be opened. There are no user-serviceable parts inside. Repairs must only be performed by Leuze electronic GmbH + Co. KG.

2.3 Competent persons

Connection, mounting, commissioning and adjustment of the device must only be carried out by competent persons.

Prerequisites for competent persons:

- They have a suitable technical education.
- They are familiar with the rules and regulations for occupational safety and safety at work.
- They are familiar with the technical description of the device.
- They have been instructed by the responsible person on the mounting and operation of the device.

Certified electricians

Electrical work must be carried out by a certified electrician.

Due to their technical training, knowledge and experience as well as their familiarity with relevant standards and regulations, certified electricians are able to perform work on electrical systems and independently detect possible dangers.

In Germany, certified electricians must fulfill the requirements of accident-prevention regulations DGUV V3 (e.g. electrician foreman). In other countries, there are respective regulations that must be observed.

1) Use as safety-related component within the safety function is possible, if the component combination is designed correspondingly by the machine manufacturer.

2.4 Exemption of liability

Leuze electronic GmbH + Co. KG is not liable in the following cases:

- The device is not being used properly.
- Reasonably foreseeable misuse is not taken into account.
- Mounting and electrical connection are not properly performed.
- Changes (e.g., constructional) are made to the device.

2.5 Laser safety notices

ATTENTION, LASER RADIATION – CLASS 2 LASER PRODUCT

Do not stare into beam

The device satisfies the requirements of IEC/EN 60825-1:2014 safety regulations for a product of laser class 2 and complies with 21 CFR 1040.10 except for conformance with IEC 60825-1 Ed. 3., as described in Laser Notice No. 56, dated May 8, 2019.

- Never look directly into the laser beam or in the direction of reflected laser beams!
  If you look into the beam path over a longer time period, there is a risk of injury to the retina.
- Do not point the laser beam of the device at persons!
- Interrupt the laser beam using a non-transparent, non-reflective object if the laser beam is accidentally directed towards a person.
- When mounting and aligning the device, avoid reflections of the laser beam off reflective surfaces!
- CAUTION! Use of controls or adjustments or performance of procedures other than specified herein may result in hazardous light exposure.
- Observe the applicable statutory and local laser protection regulations.
- The device must not be tampered with and must not be changed in any way.
  There are no user-serviceable parts inside the device.
  Repairs must only be performed by Leuze electronic GmbH + Co. KG.
- If the scanner motor fails during the emission of laser radiation, the limit value of laser class 2 in accordance with IEC 60825-1:2014 could be exceeded. The device has safeguards to prevent this occurrence.
- If the emitted laser beam is at a standstill, immediately disconnect the faulty bar code reader from the voltage supply.
- The BCL8 emits scanned optical radiation at a wavelength of 655 nm (red).
- Looking at the device's mirror and operating at the lowest scanning rate (500 scans/s) at a viewing distance of 100 mm results in pulses with a pulse duration shorter than 420 µs on the retina of the eye. The total pulse peak power at the exit window is less than 1.7 mW.
- The average laser power is less than 1 mW in accordance with laser class 2 acc. to IEC 60825-1:2014

	NOTE
	Affix laser information and warning signs! Laser warning and laser information signs are affixed to the device (see Figure 2.1). In addition, self-adhesive laser warning and information signs (stick-on labels) are supplied in several languages (see Figure 2.2). ↳ Affix the laser information sheet to the device in the language appropriate for the place of use. When using the device in the US, use the stick-on label with the "Complies with 21 CFR 1040.10" notice. ↳ Affix the laser information and warning signs near the device if no signs are attached to the device (e.g., because the device is too small) or if the attached laser information and warning signs are concealed due to the installation position. Affix the laser information and warning signs so that they are legible without exposing the reader to the laser radiation of the device or other optical radiation.

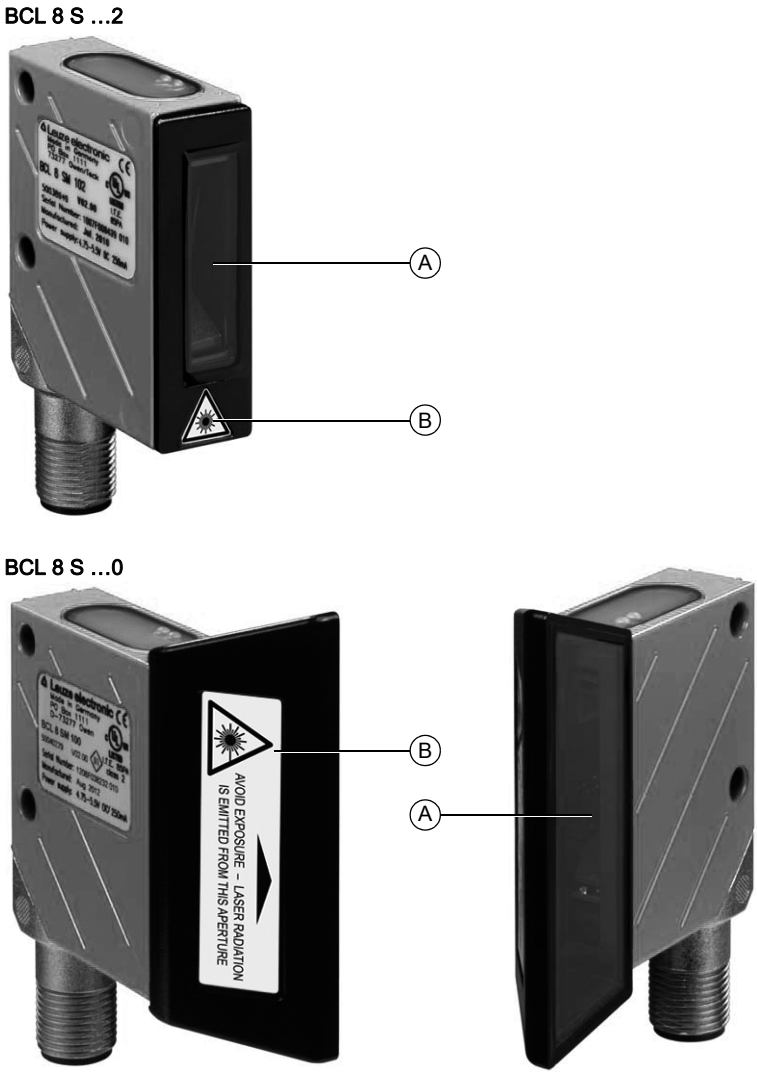

A Laser aperture
B Laser warning sign

Figure 2.1: Laser apertures, laser warning signs

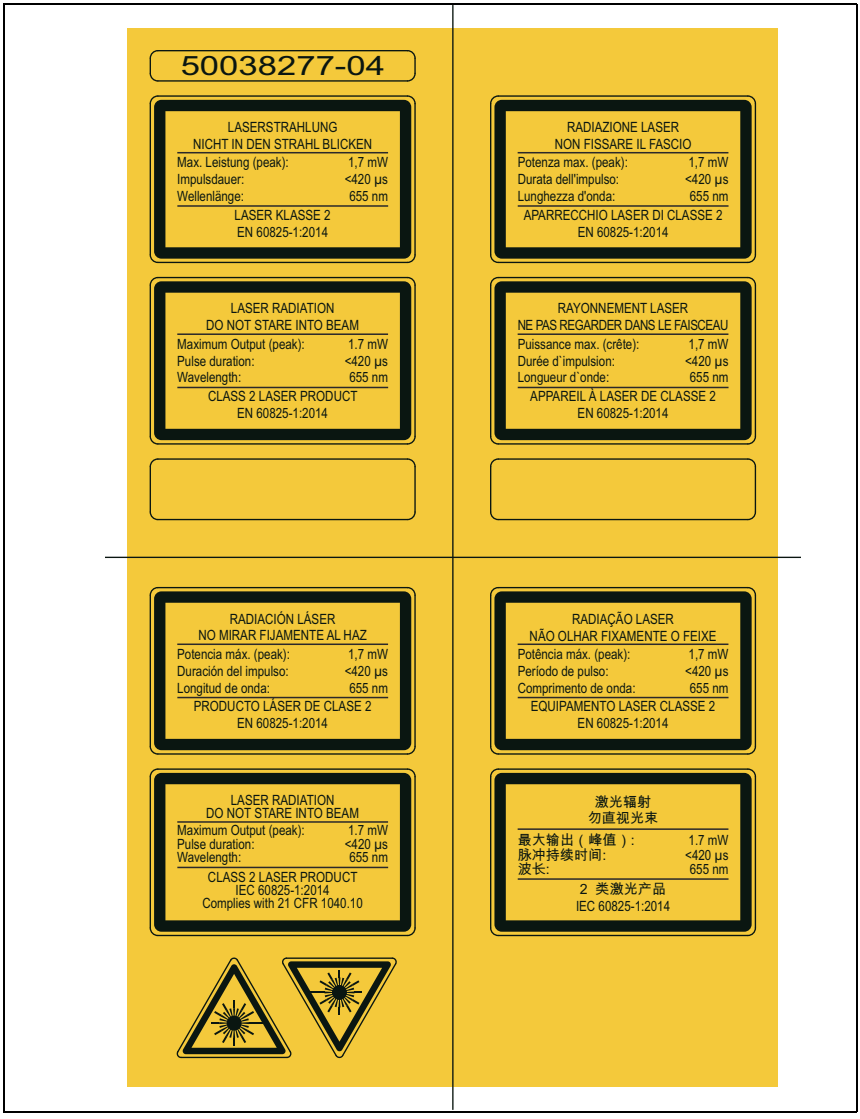

Figure 2.2: Laser warning and information signs – supplied stick-on labels

3 Description

Device construction of the BCL 8

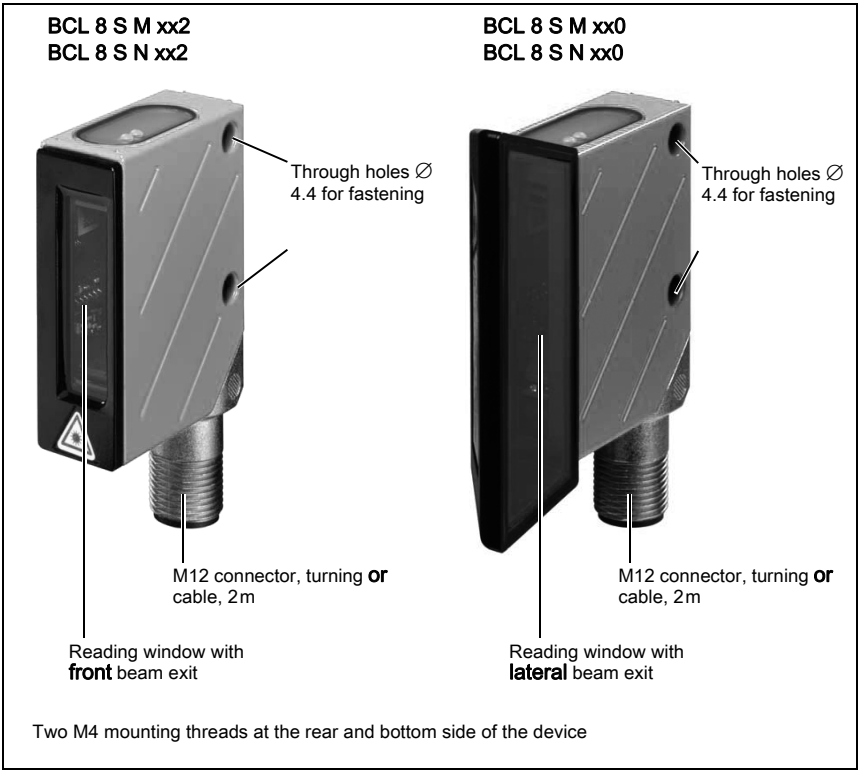

Figure 3.1: Device construction of the BCL 8

3.1 The BCL 8 bar code reader

The BCL 8 bar code reader is a laser scanner with integrated decoder for all commonly used bar codes, e.g. 2/5 Interleaved, Code 39, Code 128, EAN etc., with an extremely small housing.

The many possible configurations of the device allow it to be adapted to a multitude of reading tasks. Due to the small dimensions of the unit and its large reading field, the BCL 8 may also be used in highly constrained spaces.

For information on technical data and characteristics, refer to Chapter 4.

3.2 Stand alone operation

The BCL 8 bar code reader is operated as a "stand-alone" device. It is equipped with a 5-wire cable with open ends or a 5-pin M12 connector for the electrical connection of the supply voltage, the interface and the switching input.

With MA 8.1 connection unit

The MA 8.1 connection unit simplifies the electrical installation of the bar code reader in stand-alone operation with an **RS 232 interface**.

For details on the connection units, see Chapter 5.

With MA 8-01 connection unit

The MA 8-01 connection unit simplifies the electrical installation of the bar code reader in stand-alone operation with an **RS 485 interface**.

For details on the connection units, see Chapter 5.

3.3 Daisy chain network

A daisy chain is a network based on the RS 232 interface. All devices, which consist of a transmitter and a receiver, are connected to one another to form a ring. The transmitter of one device is directly connected to the receiver of the next device until all devices are connected together to form a ring. One device performs the task of the host system.

Ideally, all BCL 8 devices are to be connected to one another with MA 8.1 connection units so that:

- the voltage supply of the BCL 8/MA 8.1 is ensured.
- TxD to RxD of the RS 232 is established from one BCL 8 to the next (host).
- the switching outputs and inputs are connected (optional).

A maximum of seven BCL 8 devices may be operated in the daisy chain together with one host. Further information is available from your Leuze sales office.

4 Technical data

4.1 General specifications BCL 8

Optical data	
Light source	Laser diode
Laser class	2 acc. to IEC/EN 60825-1:2014 and U.S. 21 CFR 1040.10 with Laser Notice No. 56
Wavelength	655 nm
Max. output power (peak)	≤ 1.7 mW
Impulse duration	≤ 420 µs
Scanning rate	M optics: 600 scans/s N optics: 500 scans/s
Resolution	M optics: m = 0.150 … 0.500 mm / 6 … 20 mil N optics: m = 0.127 … 0.400 mm / 5 … 16 mil
Beam deflection	Via rotating polygon wheel
Beam exit	Front, alternatively on the side with deflection mirror (105°)
Reading distance	See reading fields
Reading field opening	See reading fields
Code types	2/5 Interleaved, Code 39, Code 128, EAN 128, EAN/UPC, EAN Addendum, Codabar, Pharma Code, Code 93
Software features	Selectable output format, autoConfig, autoReflAct, reference code comparison, multiple read, real time decoding, adjustment mode, control of switching input or switching output, etc.
Electrical data	
Interface type	RS 232, freely configurable
Baud rate	4800 … 57600 Bd
Data formats	Data bits: 7, 8 Parity: none, even, odd Stop bit: 1, 2
Protocols	Framing protocol with/without acknowledgment Software handshake X ON / X OFF
Service interface	RS 232 with fixed data format, 9600 Bd, 8 data bits, no parity, 1 stop bit <STX> <data> <CR><LF>
Ports	1 switching input 5 VDC **or** 1 switching output 5 … 30 V, 20 mA
LEDs	1 device status 1 read status
Operating voltage	4.75 … 5.5 VDC, protection class III - PELV [1)] (Protective Extra Low Voltage)

Table 4.1: Technical data

Current consumption	Max. 250 mA (2 W power supply unit recommended)
Mechanical data	
Degree of protection	IP 67
Connection type	M12 connector, 5-pin, turnable or Fixed cable, 2 m long, 5 x 0.25 mm^2
Weight	70 g
Dimensions (H x W x D)	Front beam exit: 48 x 40.3 x 15 mm Lateral beam exit: 48 x 58 x 17.4 mm
Housing	Metal (diecast zinc)
Environmental data	
Ambient temp. (operation/storage)	0 °C … +40 °C/-20 °C … +60 °C
Air humidity	Max. 90 % rel. humidity, non-condensing
Vibration	IEC 60068-2-6, test Fc
Shock	IEC 60068-2-27, test Ea
Electromagnetic compatibility	EN 55022, IEC 61000-4-2, -3, -4 and -6,
Conformity	CE, FCC Class B, CDRH
Certifications	UL 60950-1, C22.2 No. 60950-1 [1) 2)]

Table 4.1: Technical data

1) For UL applications: use is permitted exclusively in Class 2 circuits according to NEC
2) These bar code readers shall be used with UL Listed Cable assemblies rated 30 V, 0.5 A min, in the field installation, or equivalent (categories: CYJV/CYJV7 or PVVA/PVVA7)

4.2 LED indicators

Two, 3-color LEDs on the top of the housing indicate the device and read status:

LED	Color	Meaning
Status LED	Green, flashing	Initialization phase
	Green, continuous	Operational readiness
	Red, flashing (200 ms)	Warning
	Red, continuous	Error, no function
	Orange, flashing (200 ms)	Service operation
Decode LED	Green (200 ms on)	Reading successful
	Red (200 ms off)	No read result
	Orange, continuous	Reading gate active

Table 4.2: LED indicators

4.3 Dimensioned and connection drawings

BCL 8 S M …0, BCL 8 S N …0 with lateral beam exit

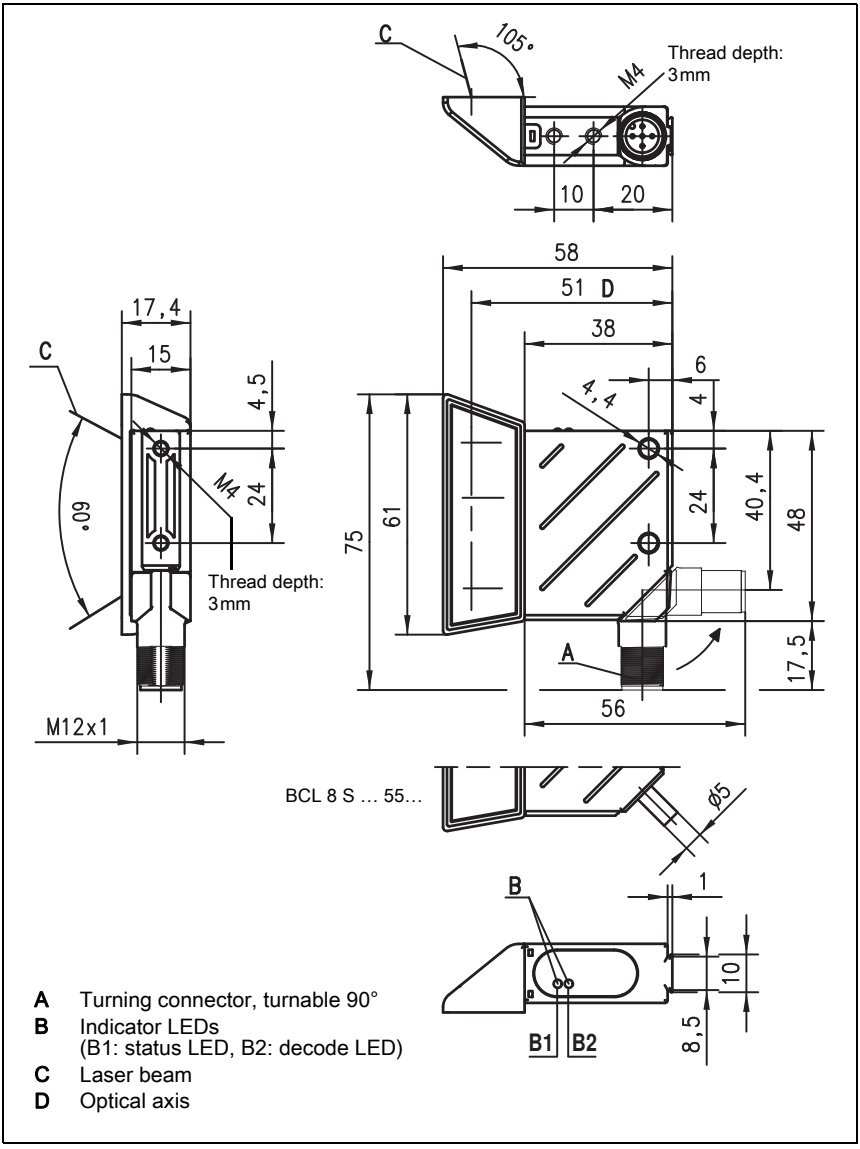

Figure 4.1: Dimensioned drawing BCL 8 S M …0, BCL 8 S N …0 with lateral beam exit

BCL 8 S M …2, BCL 8 S N …2 with front beam exit

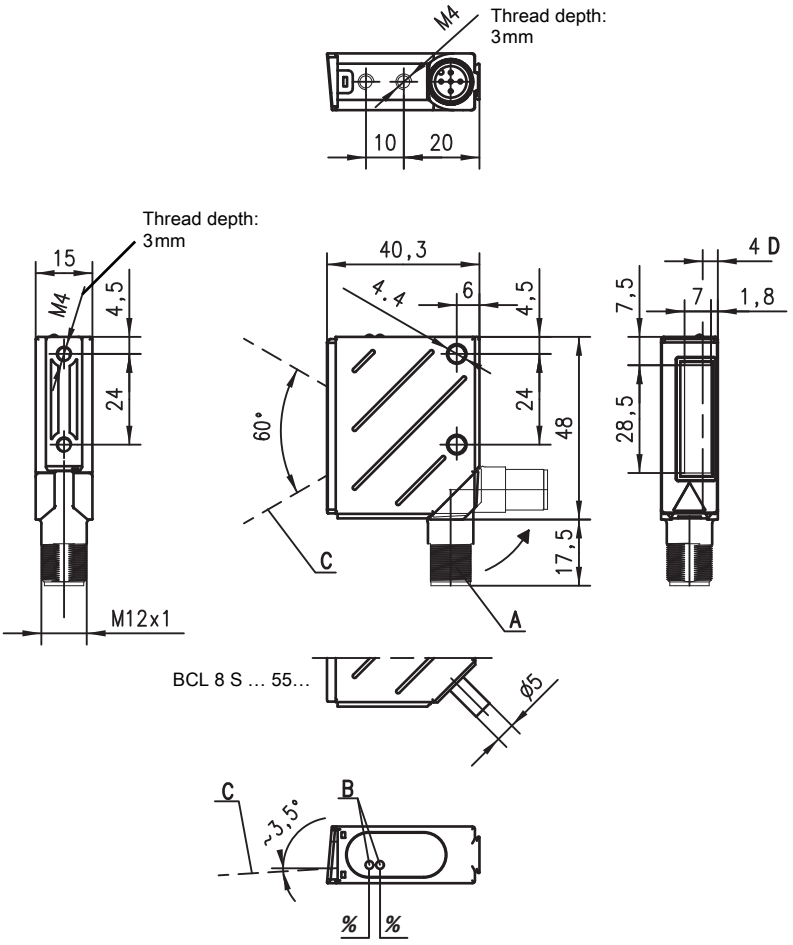

A Turning connector, turnable 90°
B Indicator LEDs (B1: status LED, B2: decode LED)
C Laser beam
D Optical axis

Figure 4.2: Dimensioned drawing BCL 8 S M …2, BCL 8 S N …2 with front beam exit

4.4 Optical data

NOTE	
	Please note that the size of the bar code module influences the maximum reading distance and the width of the reading field. Therefore, when selecting a mounting location and/or the bar code label, take into account the different reading characteristics of the scanner with various bar code modules.

For different reading task and connection requirements, the BCL 8 is available in various models (see chapter 4.4.1 "Type overview").

4.4.1 Type overview

BCL 8 with M optics

Type	Operating range	Module/ resolution [mm]	Connection	Scanner type/ Beam exit	Part no.
BCL 8 S M 100	Up to 160 mm	0.15 … 0.5	M12 connector	Single line/ Lateral	50040229
BCL 8 S M 102				Single line/ Front	50038949
BCL 8 S M 550			Fixed cable (2 m)	Single line/ Lateral	50040230
BCL 8 S M 552				Single line/ Front	50038948

Table 4.3: Type overview - M optics

BCL 8 with N optics

Type	Operating range	Module/ resolution [mm]	Connection	Scanner type/ Beam exit	Part no.
BCL 8 S N 100	Up to 120 mm	0.125 … 0.4	M12 connector	Single line/ Lateral	50105417
BCL 8 S N 102				Single line/ Front	50105418
BCL 8 S N 550			Fixed cable (2 m)	Single line/ Lateral	50105419
BCL 8 S N 552				Single line/ Front	50105420

Table 4.4: Type overview - N optics

4.4.2 Reading fields

NOTE	
	Please note that the actual reading fields are also influenced by factors such as labeling material, printing quality, scanning angle, printing contrast etc., and may thus deviate from the reading fields specified here. The origin of the read distance always refers to the front edge of the housing of the beam exit.

Reading field of BCL 8 with M optics

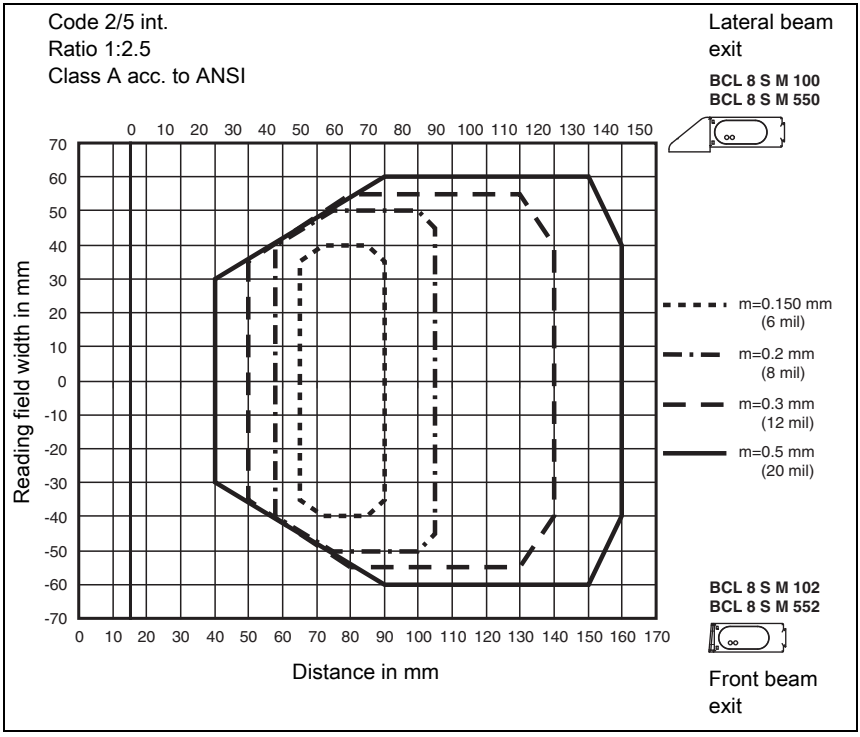

Figure 4.3: Reading field of BCL 8 S M … with M optics (medium density)

Reading field of BCL 8 with N optics

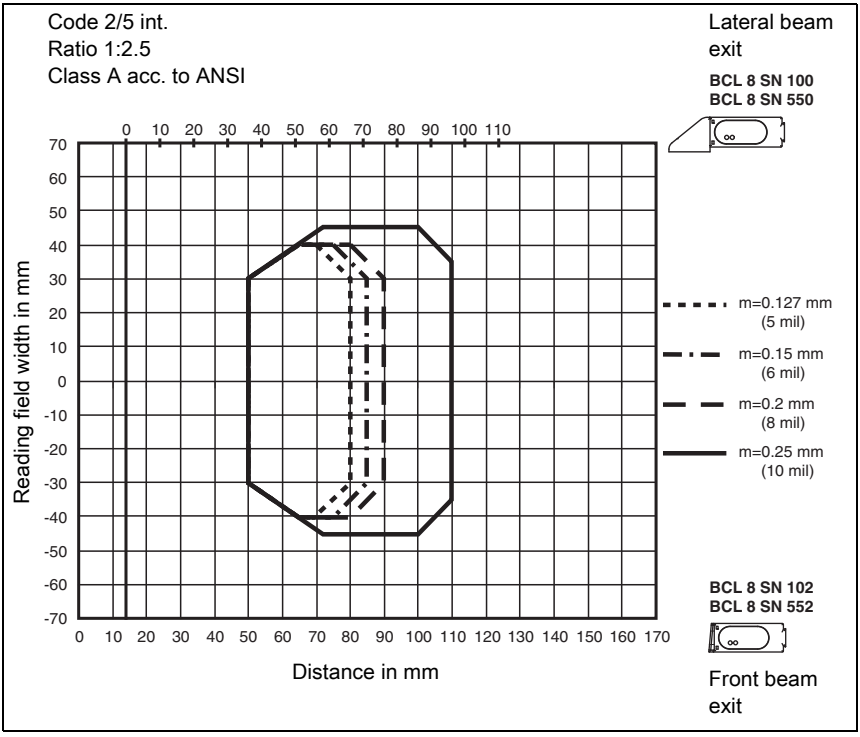

Figure 4.4: Reading field of BCL 8 S N … with N optics (high density)

5 Accessories/order codes

5.1 Accessories overview

Designation	Part no.	Short description
MA 8.1	50101699	MA 8.1 connection unit for BCL 8, **RS 232** point-to-point connection, 1 switching input **and** 1 switching output, 24 V DC
MA 8-01	50104790	MA 8-01 connection unit for BCL 8, **RS 485** point-to-point connection, 1 switching input **and** 1 switching output, 24 V DC
BT 8-0	50036196	Mounting device with dovetail
BT 300M.5	50118543	Mounting bracket, stainless steel
BTU 300M-D10	50117253	Sensor mounting bracket for rod ∅ 10 mm or cheek 1.5 … 4 mm
BTU 300M-D12	50117252	Sensor mounting bracket for rod ∅ 12 mm or cheek 1.5 … 4 mm
BTU 300M-D14	50117251	Sensor mounting bracket for rod ∅ 14 mm or cheek 1.5 … 4 mm
BTU D12M.5-150	50119323	Rod ∅ 12 mm, length 150 mm, stainless steel
BTU D12M.5-250	50119324	Rod ∅ 12 mm, length 250 mm, stainless steel
BTU D12M-D12-A090	50119323	90°-connector for 2 rods ∅ 12 mm
BTU D12M-D12-B090	50119333	Mounting bracket for rods ∅ 12 mm, system-side mounting bracket 2 x M6, hole spacing 27 mm … 45 mm, diecast aluminum
BTP 300M-D10	50117827	Sensor protective cover for rod ∅ 10 mm or cheek 1.5 … 4 mm
BTP 300M-D12	50117826	Sensor protective cover for rod ∅ 12 mm or cheek 1.5 … 4 mm
BTP 300M-D14	50117825	Sensor protective cover for rod ∅ 14 mm or cheek 1.5 … 4 mm
Reflective tape no. 4 100 x 100 mm	50106119	Reflective tape as reflector for AutoReflAct operation (see Chapter 10.7 on Page 55)
BCLConfig	Download at www.leuze.com	Configuration software

Table 5.1: Accessories/order codes

5.2 MA 8.1 connection unit

The MA 8.1 connection unit is used to simplify the electrical installation of the BCL 8. The connection unit offers the following advantages over the installation of the BCL 8 as a stand-alone device:

- M12 socket for switching input and switching output
- M12 connector for RS 232 interface and voltage supply 24 V DC
- M12 socket for connection of the BCL 8

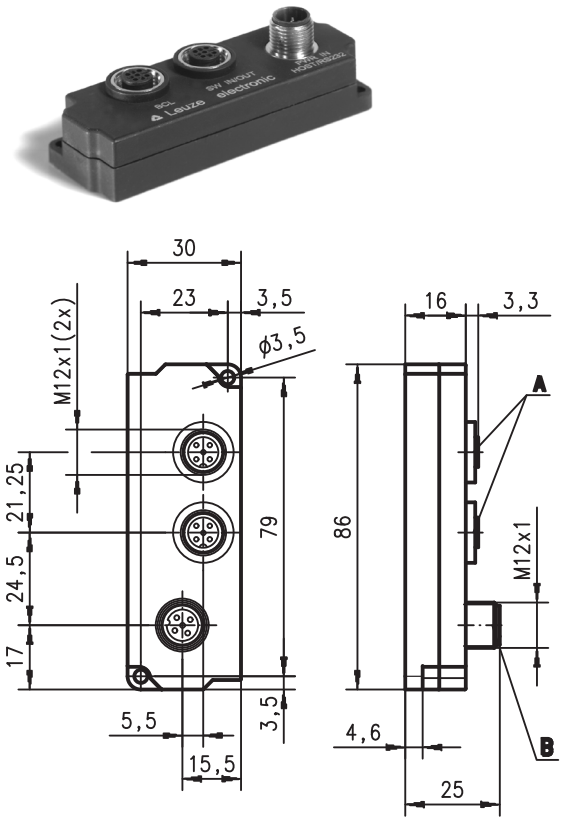

A M12 socket, 5-pin
B M12 connector, 5-pin

Figure 5.1: Photo and dimensioned drawing of the MA 8.1 connection unit

5.2.1 Electrical connection MA 8.1

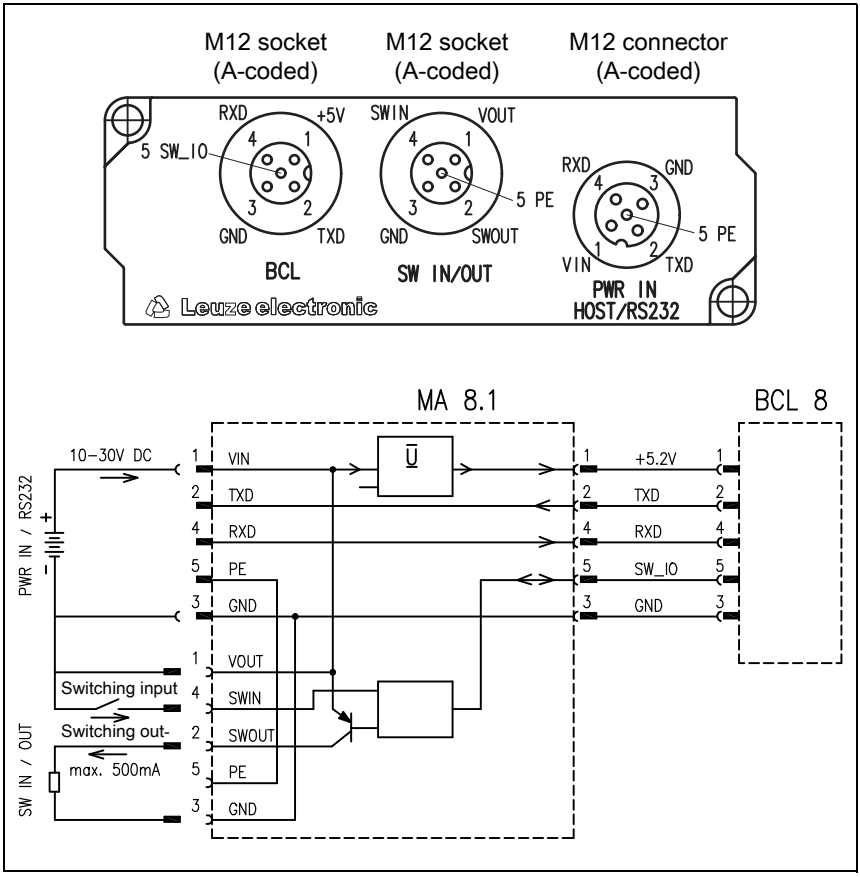

Figure 5.2: Electrical connection MA 8.1

5.2.2 MA 8.1 - PWR IN HOST/RS232 - voltage supply and RS 232

PWR IN HOST/RS232 (5-pin connector, A-coded)			
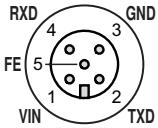 PWR IN HOST/RS232 M12 connector (A-coded)	Pin	Name	Comment
	1	VIN	Positive supply voltage: +10 … +30VDC
	2	TXD	RS 232 transmit data from the BCL 8 to the host
	3	GND	Supply voltage: 0VDC
	4	RXD	RS 232 receive data from the host to the BCL 8
	5	FE	Functional earth
	Thread	FE	Functional earth (housing)

Figure 5.1: MA 8.1 - Pin assignment PWR IN HOST/RS232

⚠ ATTENTION!	
	Degree of protection IP 67 is achieved only if the connectors and caps are screwed into place!

5.2.3 MA 8.1 - SW IN/OUT – switching input and switching output

SW IN/OUT (5-pin socket, A-coded)			
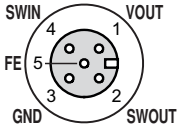 SW IN/OUT M12 socket (A-coded)	Pin	Name	Comment
	1	VOUT	Voltage supply for sensor system (VOUT identical to VIN at PWR IN)
	2	SWOUT	Switching output
	3	GND	GND for the sensor system
	4	SWIN	Switching input
	5	FE	Functional earth
	Thread	FE	Functional earth (housing)

Figure 5.1: MA 8.1 - Pin assignment SW IN/OUT

⚠ ATTENTION!	
	Degree of protection IP 67 is achieved only if the connectors and caps are screwed into place!

ПРОМЭЛЕКТРОНИКА / sales@prom-elec.com

NOTE	
	The switching input/switching output are programmed via the **BCLconfig** configuration software. For more information, see also chapter 10.6 and chapter 10.8, page 59 et seq.

ATTENTION!	
	If you use a sensor with a standard M12 connector, then please note the following: Use **only sensors** on which the **switching output does not lie on pin 2** or **sensor cables on which pin 2 is not assigned**. Otherwise, the switching output is not protected against feedback on the switching input. If the inverted sensor output lies on pin 2, erroneous behavior of the switching output will result.

Connecting the switching input / switching output

The MA 8.1 is provided with a switching input and a switching output. The connection of switching input / switching output is carried out in accordance with Figure 5.2.

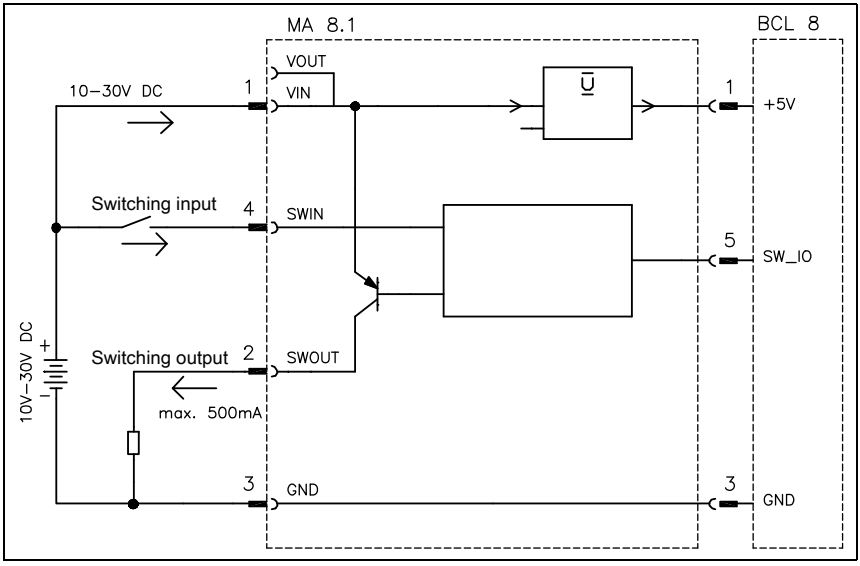

Figure 5.2: Connection of the switching input/output of the MA 8.1

5.2.4 MA 8.1 - BCL - connecting the BCL 8 to the MA 8.1

BCL (5-pin socket, A-coded)			
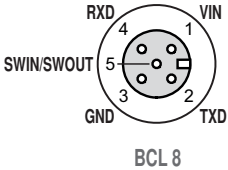 M12 socket	Pin	Name	Comment
	1	VIN	Supply voltage for BCL 8 +4.9 … +5.4 VDC
	2	TXD	RS 232 transmission line
	3	GND	Supply voltage: 0 VDC
	4	RXD	RS 232 receiving line
	5	SWIN/ SWOUT	Programmable switching input/output of the BCL 8
	Thread	FE	Functional earth (housing)

Figure 5.1: MA 8.1 - Pin assignment BCL

⚠ ATTENTION!	
⚠	Degree of protection IP 67 is achieved only if the connectors and caps are screwed into place!

The BCL 8 is connected to the MA 8.1 via the connection cable KB 008-1000/2000/3000 (AA/AR). The voltage supply is connected via the **PWR IN HOST/RS232** socket.

⚠ ATTENTION!	
⚠	It is absolutely necessary to connect the functional earth, since all electrical interference (EMC coupling) is discharged via the functional earth connection.

5.3 Connection unit MA 8-01

The modular connection unit is an optional accessory when connecting a BCL 8 to an RS 485 interface. The RS 485 interface, the switching input and the switching output are all connected to the MA 8-01. It also supplies voltage to the BCL 8. The MA 8-01 connection unit offers the following advantages over the installation of the BCL 8 as a stand-alone device:

- M12 socket for switching input and switching output
- M12 connector for RS 485 interface and voltage supply 24 VDC
- M12 socket for connection of the BCL 8

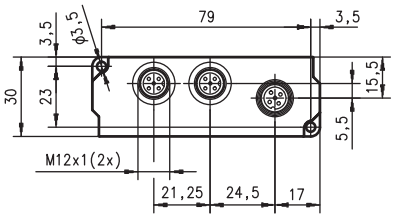

all dimensions in mm

PWR IN HOST/RS485	= Voltage supply/RS 485 host interface
SW IN/OUT	= Switching input/output
BPS	= Connection to BCL 8/BPS 8

Note!

The SW IN/OUT connection is sealed with a thread plug upon delivery.

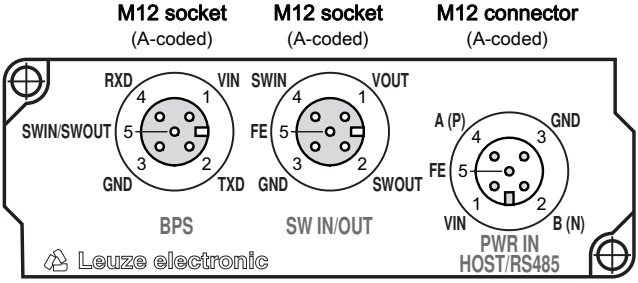

Figure 5.2: Pin assignment - MA 8-01

ATTENTION!

Degree of protection IP 67 is achieved only if the connectors and caps are screwed into place!

Electrical connection MA 8-01

Electrical data

Interface type	RS 485
Service interface	**No MA 8-01 connected**: RS 232 with default data format, 9600 Bd, 8 data bits, no parity, 1 stop bit **With MA 8-01 connected**: RS 485 replaces RS 232
Switching input/output	1 switching input, 1 switching output, each is programmable Switching input: 10 … 30 VDC Switching output: I_{max} = 500 mA output voltage = operating voltage
Operating voltage	10 … 30 VDC
Power consumption	Max. 0.5 W

5.3.1 MA 8-01 - PWR IN HOST/RS485 - Voltage supply and RS 485

PWR IN HOST/RS485 (5-pin connector, A-coded)

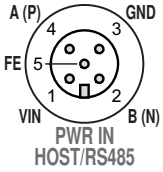

M12 connector

Pin	Name	Comment
1	VIN	Positive supply voltage: +10 … +30 VDC
2	B (N)	RS 485 receive/transmit data B-line (N)
3	GND	Supply voltage: 0 VDC
4	A (P)	RS 485 receive/transmit data A-line (P)
5	FE	Functional earth
Thread	FE	Functional earth (housing)

Figure 5.1: MA 8-01 - Pin assignment PWR IN HOST/RS485

⚠ ATTENTION!

Degree of protection IP 67 is achieved only if the connectors and caps are screwed into place!

5.3.2 MA 8-01 - SW IN/OUT - switching input and switching output

SW IN/OUT (5-pin socket, A-coded)			
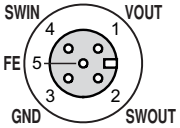 SW IN/OUT M12 socket	Pin	Name	Comment
	1	VOUT	Voltage supply for sensor system (VOUT identical to VIN at PWR IN)
	2	SWOUT	Switching output
	3	GND	GND for the sensor system
	4	SWIN	Switching input
	5	FE	Functional earth
	Thread	FE	Functional earth (housing)

Figure 5.1: MA 8-01 - Pin assignment SW IN/OUT

ATTENTION!

Degree of protection IP 67 is achieved only if the connectors and caps are screwed into place!

NOTE

The switching input/switching output are programmed via the parameters in the **BCLconfig** configuration software. For more information see also Chapter 10.6 and Chapter 10.8, Page 54 et seq.

ATTENTION!

If you use a sensor with a standard M12 connector, then please note the following:

↳ Use **only sensors** on which the **switching output does not lie on pin 2** or **sensor cables on which pin 2 is not assigned**. Otherwise, the switching output is not protected against feedback on the switching input. If the inverted sensor output lies on pin 2, erroneous behavior of the switching output will result.

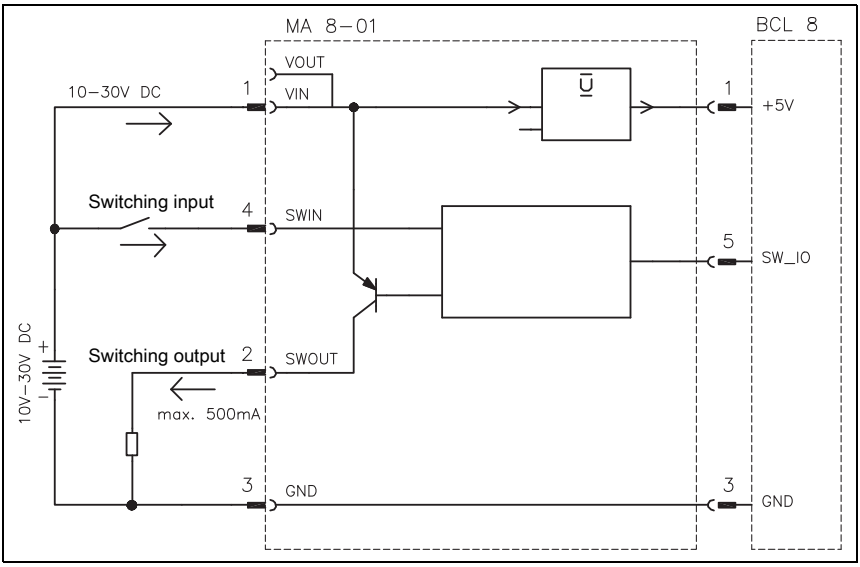

Figure 5.2: Electrical connection MA 8-01

5.3.3 MA 8-01 - BCL - connecting the BCL 8 to the MA 8-01

BPS (5-pin socket, A-coded)			
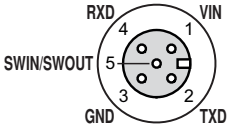 BPS M12 socket	Pin	Name	Comment
	1	VIN	Supply voltage for BCL 8 approx. +5.2VDC
	2	TXD	RS 232 transmission line
	3	GND	Supply voltage: 0VDC
	4	RXD	RS 232 receiving line
	5	SWIN/ SWOUT	Programmable switching input/output of the BCL 8
	Thread	FE	Functional earth (housing)

Figure 5.1: MA 8-01 - Pin assignment BCL

⚠ ATTENTION!	
⚠	Degree of protection IP 67 is achieved only if the connectors and caps are screwed into place!

The BCL 8 is connected to the MA 8-01 via the connection cable KB 008-1000/2000/3000 (AA/AR). The voltage supply is connected via the **PWR IN HOST/RS485** socket.

⚠ ATTENTION!	
⚠	It is absolutely necessary to connect the functional earth, since all electrical interference (EMC coupling) is discharged via the functional earth connection.

5.3.4 Termination of the RS 485 interface

A permanently installed termination network is present in the MA 8-01. The network terminates the outgoing RS 485 data interface, as shown in Figure 5.2, and cannot be switched off.

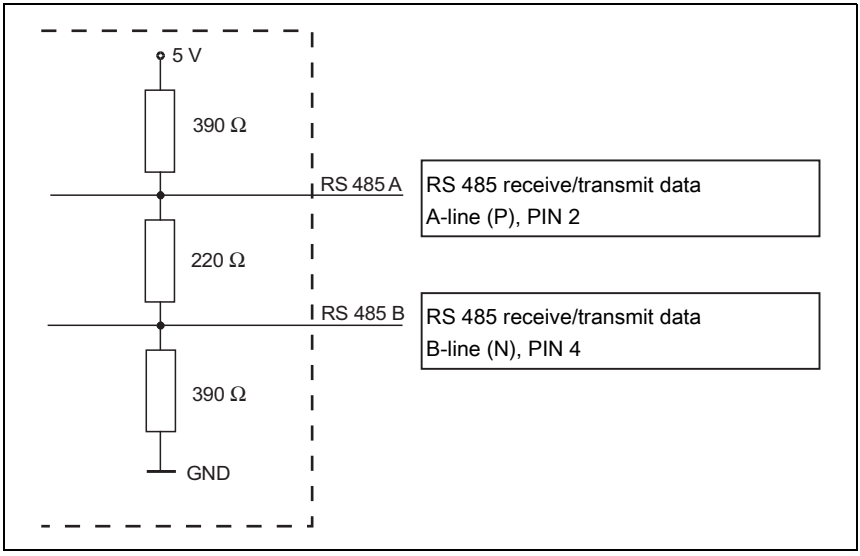

Figure 5.2: Termination of the RS 485 interface in the MA 8-01

5.4 Mounting accessories

A variety of mounting devices are available for mounting the BCL 8. These are designed for rod or screw mounting (see also the Leuze Catalog, Series 8 Accessories).

Universal rod mounting system

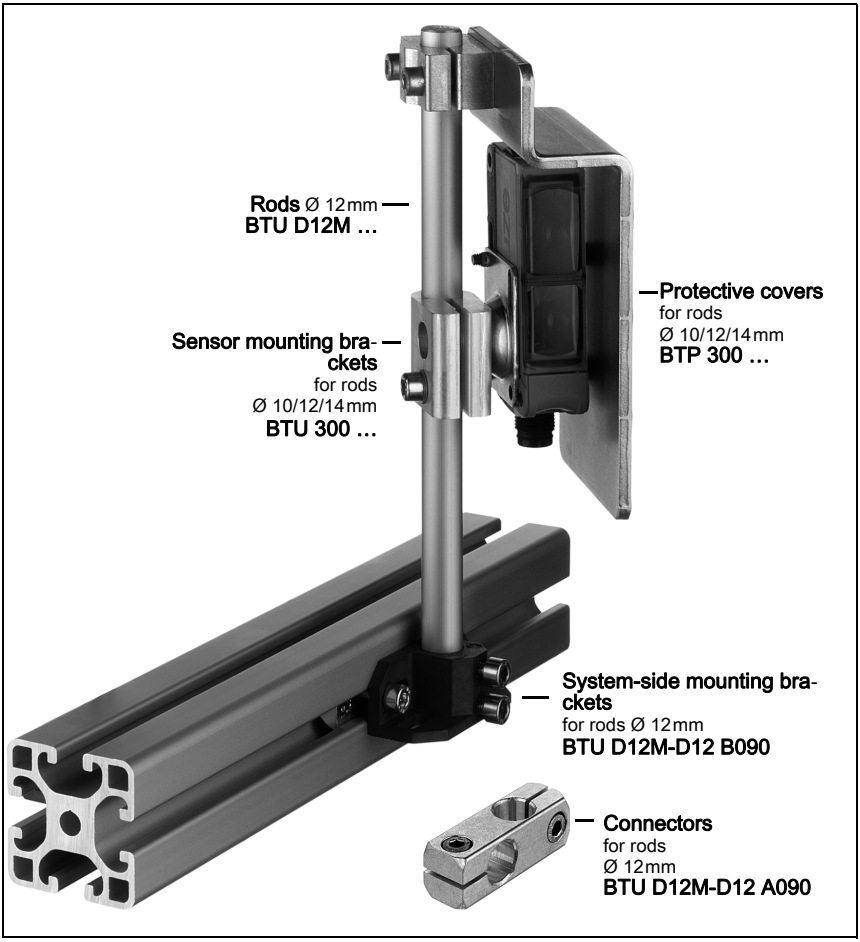

Figure 5.3: Universal rod mounting system for BCL 8

6 Installation

6.1 Storage, transportation

⚠ ATTENTION!	
	Package the device for transport and storage in such a way that is protected against shock and humidity. Optimum protection is achieved when using the original packaging. Ensure compliance with the approved environmental conditions listed in the specifications.

Unpacking

- Check the packaging content for any damage. If damage is found, notify the post office or shipping agent as well as the supplier.
- Check the delivery contents using your order and the delivery papers:
  - Delivered quantity
  - Device type and model as indicated on the nameplate
  - Laser warning signs
  - Brief manual

The name plates provide information as to what BCL type your device is. For specific information, please refer to Chapter 4.4.1.

BCL 8 name plate

BCL 8 type designation

Figure 6.1: BCL 8 device name plate

- Save the original packaging for later storage or shipping.

If you have any questions concerning your shipment, please contact your supplier or your local Leuze electronic sales office.

- Observe the applicable local regulations when disposing of the packaging materials.

Cleaning

- Clean the glass window of the BCL 8 with a soft cloth before mounting. Remove all packaging remains, e.g. carton fibers or Styrofoam balls.

⚠ ATTENTION!	
	Do not use aggressive cleaning agents such as thinner or acetone for cleaning the device.

6.2 Mounting

ATTENTION, LASER RADIATION – CLASS 2 LASER PRODUCT	
	Follow the safety notices in Chapter 2.5 on Page 7!

Accessories

A variety of mounting systems are available which you can order separately from Leuze electronic (see Chapter 5.1 and Chapter 5.4).

Mounting the BCL 8

There are three basic mounting arrangements for the BCL 8 (see Chapter 4.3):

- using the dovetail strips and the corresponding mounting accessories BT 8-0.
- using the mounting threads on the back- and underside of the devices.
- using the two ∅ 4.4 mm through holes.

Mounting the MA 8.1 connection unit

You can mount the MA 8.1 connection unit according to your needs by using the two bore holes. Subsequently, connect the BCL 8 with the connection unit via the respective cable (see separate data sheet for MA 8.1).

6.2.1 Device arrangement

Selecting a mounting location

In order to select the right mounting location, several factors must be considered:

- size, orientation, and position tolerance of the bar codes on the objects to be scanned.
- the reading field of the BCL 8 in relation to the bar code module width.
- the resulting minimum and maximum read distance from the respective reading field (for specific information, please refer to Chapter 4.4).
- alignment of the bar code reader for avoiding reflections.
- distance between BCL 8 and host system with respect to the interface.

NOTE	
	The best read results are obtained when • the reading distance lies in the middle area of the reading field. • there is no direct sunlight and extraneous light is avoided. • the bar code labels are of good print quality and have good contrast ratios. • you do not use high-gloss labels. • the bar code is moved past the reading window with an angle of rotation > approx. 15°. • the laser beam is narrowed down for its respective reading task in order to avoid reflections on shiny components.

NOTE	
	With front beam exit, the beam exit on the BCL 8 is nearly vertical to the reading window; with lateral beam exit, the beam exit is at 15° from vertical. The bar code label must be rotated by > 10° to avoid a total reflection of the laser beam in the case of glossy labels.

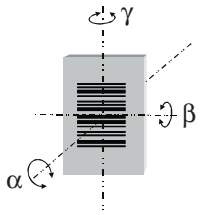

α = azimuth angle
β = angle of inclination
γ = angle of rotation

Recommended angle of rotation:
γ > 10°

Figure 6.2: Definition of the BCL 8 reading angles

Mounting location

When choosing the mounting location, observe the following:

- maintaining the required environmental conditions (temperature, humidity).
- possible soiling of the reading window due to liquids, abrasion by boxes, or packaging material residues.
- lowest possible chance of damage to the scanner by mechanical collision or jammed parts.
- possible extraneous light influence (no direct sunlight).

6.3 Connection

ATTENTION!	
	The BCL 8 bar code reader is completely sealed and cannot be opened. Do not try to open the device under any circumstances, as this avoids both degree of protection IP 67 and the warranty. ➪ Before connecting the device, be sure that the supply voltage agrees with the value printed on the name plate. ➪ Connection of the device and maintenance work while under voltage must only be carried out by a qualified electrician. ➪ The power supply unit for the generation of the supply voltage for the BCL 8 and the corresponding connection units must have a secure electrical insulation according to IEC 60742 (PELV). For UL applications: only for use in class 2 circuits according to NEC. ➪ Take care to connect the protective conductor correctly to the housing screen. Fault-free operation is only guaranteed when the device is properly earthed. ➪ If faults cannot be cleared, the device should be switched off and protected against accidental use.

6.3.1 Connecting the BCL 8

BCL 8 pin assignment

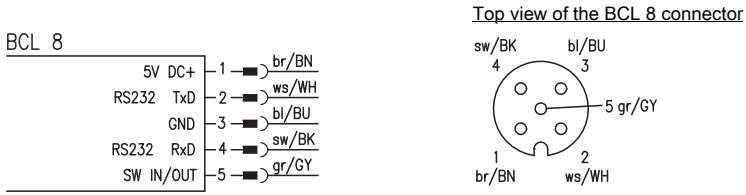

Figure 6.3: BCL 8 pin assignment

Connection description

Pin 1	+5V DC	Operating voltage 5VDC
Pin 2	RS 232 TxD	TxD signal line of the RS232 interface
Pin 3	GND	Operating voltage 0VDC / reference ground
Pin 4	RS 232 RxD	RxD signal line of the RS232 interface
Pin 5	SW IN/OUT	Switching input **or** switching output

Table 6.1: Wiring description BCL 8

6.3.2 Connecting the switching input/output

The BCL 8 is provided with a switching input **or** a switching output. You can configure the respective function (input or output) according to your requirements using the supplied BCLConfig software.

Switching input (default)

By means of the SW IN/OUT combined switching input/output connection, you can trigger a read process **in the standard setting** (low = active) with the connection SW IN/OUT (pin 5) and GND (pin 3). The 2.2 kΩ "pull-up" resistor must be connected externally (**connection version 1**, Figure 6.4).

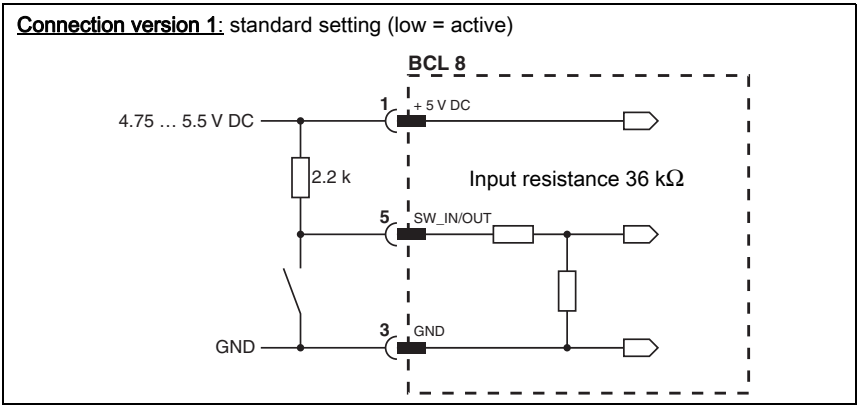

Figure 6.4: Switching input for BCL 8 connection version 1 (standard setting)

With the **"inverted" setting** (high = active), you can trigger a read process by applying a voltage of +5 V DC (pin 1) at SW IN/OUT (pin 5) (**connection version 2**, Figure 6.5).

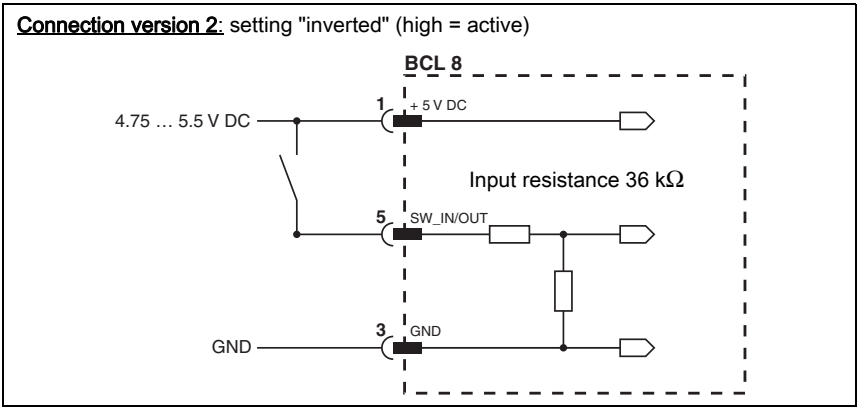

Figure 6.5: Switching input for BCL 8 connection version 2 (setting "inverted")

Switching output

The switching output connection between SW IN/OUT (pin 5) and GND (pin 3) can be activated in the scanner setup.
In the basic setting, the SW IN/OUT switching output is switched to GND (pin 3) if a code is recognized.

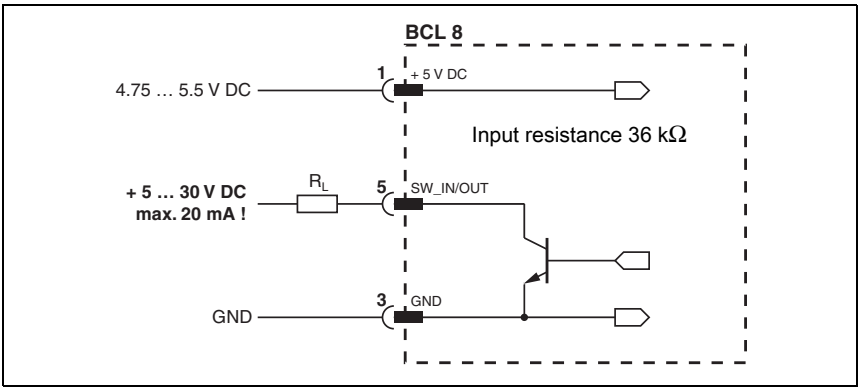

Figure 6.6: Switching output BCL 8

ATTENTION!

Do not load the respective switching output of the BCL 8 with more than 20 mA at +5 … 30 VDC!

NOTE

You can configure the switching input/output according to your needs using the supplied BCLConfig program.

6.3.3 Cable lengths

The following maximum line lengths to be used must be observed:

Connection	Interface	Max. cable length	Shielding
BCL 8 direct	RS 232	< 3m	required
BCL 8 – MA 8.1	RS 232	< 3m	required
BCL 8 – MA 8-01	RS 232	< 3m	required
MA 8.1 – host	RS 232	< 10m	required
MA 8-01 – host	RS 485	< 25m	required
Switching input/output		< 10m	Not necessary

Table 6.2: Cable lengths

NOTE

The **RS 232 connection** between BCL 8 and host must not **exceed a total of** 10m.

6.4 Disassembling, packing, disposing

Repacking

For later re-use, the device is to be packed so that it is protected against shocks and humidity. Optimum protection is achieved when using the original packaging.

NOTE

Electrical scrap is a special waste product!

↳ Observe the locally applicable regulations regarding disposal of the product.

7 Commissioning

⚠ ATTENTION, LASER RADIATION – CLASS 2 LASER PRODUCT	
	Follow the safety notices in Chapter 2.5 on Page 7!

7.1 Measures to be performed prior to the initial commissioning

- Before commissioning, familiarize yourself with the operation and configuration of the device(s).
- Before connecting the supply voltage, recheck all connections and ensure that they have been properly made.

7.2 Function Test

"Power On" test

After connecting the operating voltage, the BCL 8 performs an automatic "Power On" function test. Afterward, the green status LED on the top side of the BCL 8 lights up. Only then are any saved customer-specific settings active.

Interface

Proper function of the interface can be tested easiest in service operation using the service interface with the "BCLConfig" programming software and a notebook computer.

Online commands

Using the online commands, important device functions can be checked, e.g. proper functioning of the laser.

Problems

Should problems occur during device commissioning, refer first to Chapter 8.2. If a problem occurs that cannot be rectified even after checking all electrical connections and settings on the devices and on the host, please contact the closest Leuze service organization (see back page of this operating manual).

7.3 Setting the parameters

You have now commissioned the BCL 8. Usually, you will have to configure it before you can use it. Using the parameter options made available by the BCL 8, you may configure the bar code reader to suit your individual area of application. For instructions regarding the various setting options, refer to Chapter 9 or the online help of the BCLConfig program.

To operate the BCL 8, it is normally sufficient to set code type and code length in accordance with the bar codes that are to be read. However, depending on the application, you will additionally activate the autoReflAct function and configure the switching inputs and outputs according to your requirements.

The setting of code type and code length is usually accomplished by using the BCLConfig program, see "Installing the BCLConfig software" on page 44.

The various parameter sets are explained briefly in the following Chapter 7.3.1, to understand what is happening during parameter setting.

The setting of the parameters then takes place in the "service" operating mode, which is described in Chapter 7.3.2.

7.3.1 Parameter sets

Factory default parameter set

This parameter set contains the default settings made ex works for all BCL 8 parameters. It is permanently stored in the ROM of the BCL 8. The parameter set with the factory settings is loaded into the memory of the BCL 8,

- the first time the device is commissioned after delivery;
- following the command "Factory Default" in the configuration program (online command ’PC20’);
- if the check sums of the current parameter set are invalid.

Current parameter set

In this parameter set, the current settings for all device parameters are stored. When the BCL 8 is in operation, the parameter set is stored in the EEPROM of the BCL 8. The current set can be stored:

- by copying a valid parameter set from the host computer to the BCL 8;
- by an off-line setup using the BCLConfig configuration software and then subsequently copying to the BCL 8.

The current parameter set is loaded into the memory of the BCL 8:

- each time the supply voltage is connected;
- following a software reset (online command ’H’).

The current parameter set is overwritten by the parameter set with the factory settings:

- by a parameter reset, see Page 67.

7.3.2 Service operating mode

Setting the required parameters is carried out easiest in the 'Service' operating mode. The operating mode Service provides the following defined operating parameters on the RS 232 interface, no matter how the BCL 8 is configured for standard operation:

- Transmission rate: 9600 baud
- No parity
- 8 data bits
- 1 stop bit
- Prefix: STX
- Postfix: CR, LF

Activate service interface

The service interface can be activated by holding a defined bar code label ("Service", see Figure 7.1) in front of the reading window during power-up (initialization phase).

Figure 7.1: Bar code label "Service"

While the laser switches on for approx. 1 s after power-up, the "Service" label is to be held up in front of the bar code reader at a suitable read distance. When the device is in service mode, the status LED flashes orange.

Connection

You can connect a PC or a terminal to the BCL 8 via the serial interface and configure the BCL 8 through this connection. The connection is made using an RS 232 connection cable that establishes the RxD, TxD and GND connections between PC and BCL 8.

If the BCL 8 is connected to a connection unit, you can establish the connection in the same way in front of the connection unit. For the respective pin assignments, please refer to the data sheet of the connection unit.

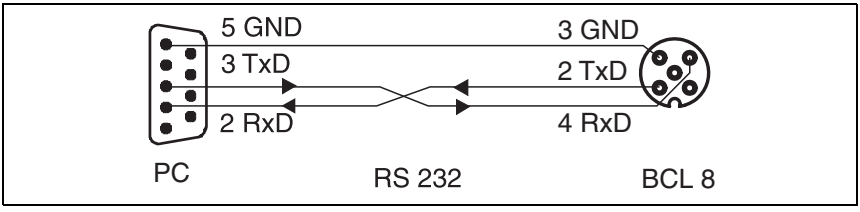

Figure 7.2: Connecting the RS 232 interface to a PC or terminal

8 Operation

ATTENTION, LASER RADIATION – CLASS 2 LASER PRODUCT	
	Follow the safety notices in Chapter 2.5 on Page 7!

NOTE	
	↳ Please observe the notices for device arrangement in Chapter 6.2.1. ↳ If possible, always trigger the laser scanner with the aid of commands, an external signal transmitter (photoelectric sensor) or the integrated AutoReflAct function. Only then can you be certain whether a code has been read. If read, the code contents are transmitted; if not, the NoRead character is transmitted at the end of the reading gate).

8.1 Display elements

On the BCL 8, you will find two LEDs that show the operational readiness and the reading state of the bar code reader (see Table 4.2 on page 14).

8.2 Error handling

Error, warning and status messages of the BCL 8 are transmitted via the RS 232 interface.

Types of errors

Errors are divided up into the following types:

- Warnings
- Serious errors

Warnings

Warnings indicate temporary operating faults which do not affect the proper functioning of the device.

Serious errors

Serious errors impair the proper functioning of the device. The device must be reinitialized.

Troubleshooting

Isolated warnings can be ignored, since the BCL 8 will continue to function properly.

Following a serious error, you should reinitialize the BCL 8. It will then usually again function properly. If a hardware problem is present, the BCL 8 will not reinitialize.

Warnings and errors which occur frequently can be corrected easiest using the BCLConfig software.

If you cannot correct faults and errors with the software, please contact a Leuze electronic sales office or service facility. For addresses, please refer to the back page of this operating manual.

NOTE	
	Please also observe the notices for diagnostics and troubleshooting in Chapter 12.3.

9 Communication with the device

Device parameters can be set using the automatic configuration "autoConfig", with commands via the serial interface or using the easy-to-use BCLConfig control software.

9.1 Installing the BCLConfig software

- Insert the installation CD into your drive
  (also available on the Internet under www.leuze.de).
- Call up the installation file (e.g. Setup.exe).
- Select the installation language.

The following window appears:

Installation window

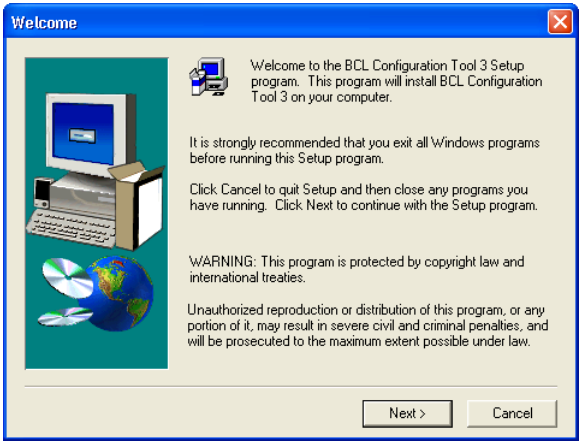

Figure 9.1: Installation window

- Confirm the following licence agreement and select the installation path in the following window.

Installation directory

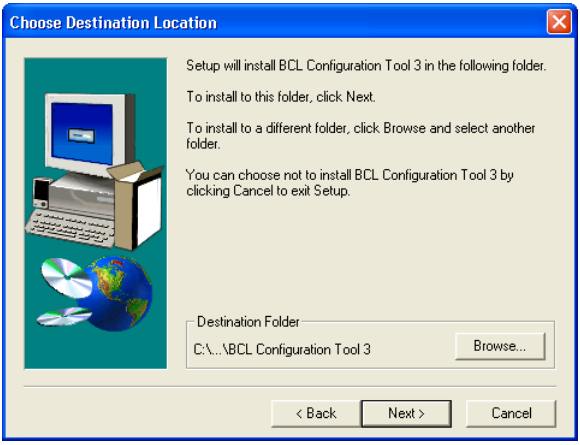

Figure 9.2: Installation directory

- Confirm your entry with Next, then follow the installation routine.

For further details please refer to online help of the "BCLConfig" software.

- After the successful installation, double-click on the file "BCLconfig.exe" to activate the configuration program.

Select the **BCL 8** from the list at the left. The following window for the graphical configuration is displayed:

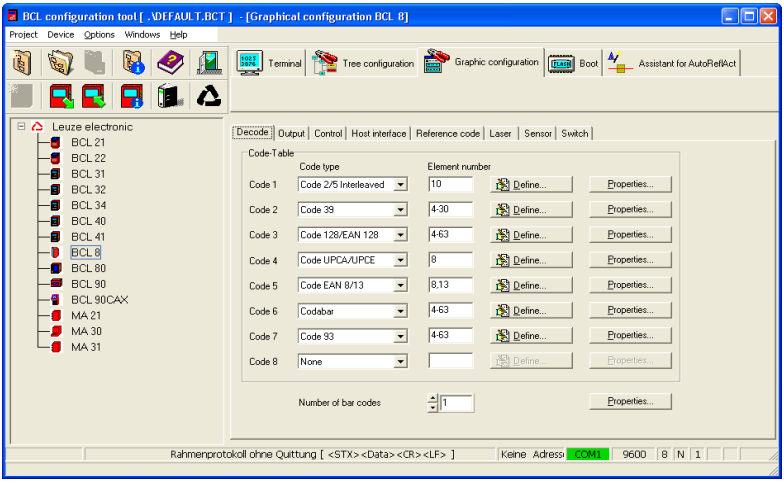

Figure 9.3: BCL 8 configuration software

10 Important parameters

10.1 Decode tab

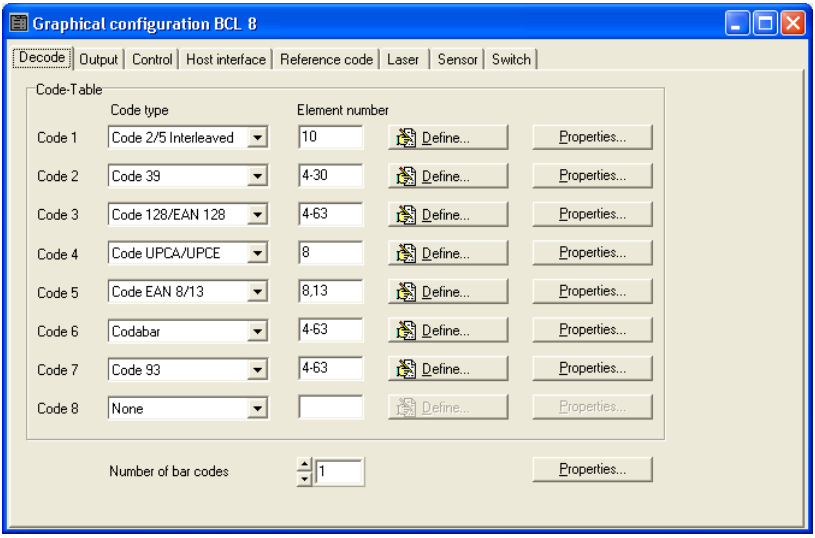

Figure 10.1: Decode tab

Code table

Here, the codes which are to be decoded are set. We recommend enabling only the code types which are to actually be read with the corresponding element numbers. Codes which are not enabled are not decoded!

Number of digits

In the field Element number, up to 3 element entries may be entered.

An area is represented by a dashed line:	e.g. 4-40 digits.
With 2 or 3 different element entries by a comma:	e.g.: 8,13 digits
The combination is also possible, but the range must be specified first:	e.g.: 4-10,20 digits

NOTE	
	If the code EAN128 is to be read, 3 additional characters are to be set for the code identifier.

Features

Behind the "Properties" button, to the right of the respective code, the code-specific settings, such as the check digit, can be selected.

Labels to be decoded

Here, the number of the bar codes to be decoded within a read cycle (one reading gate) is set.

10.1.1 Properties window – Decode tab

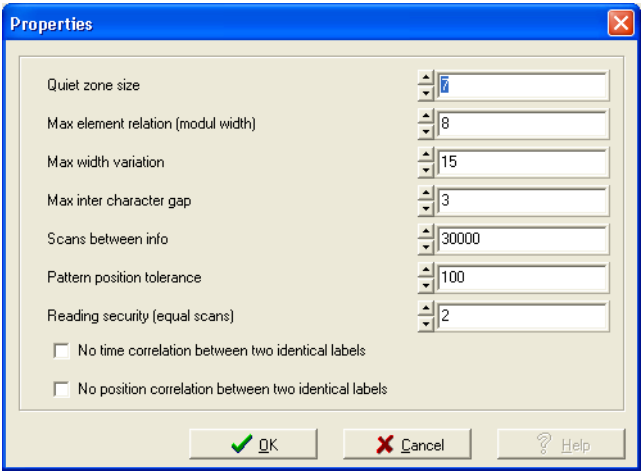

Figure 10.2: Standard settings for the Properties window – Decode tab

Quiet zone minimum size (in module widths)

Quiet zone: the area to the left and right of the bar code
Module: width of the narrowest line in the bar code
According to code specifications, each bar code must have a quiet zone that is 10x as wide as the module of the bar code.
Ex: for a code having a module of 0.5 mm, 5 mm blank space must be present at both the left and right of the code.
By default, the scanner checks a quiet zone that is 7x greater than the module. This means 7x or greater is acceptable for the scanner.

Reading reliability (equal scans)

Specifies how often a code must be decoded before the result is valid and output. This value should only be increased for test purposes or for codes with low security.

No time correlation between two identical scans

If this parameter is set, a gap between two identical labels is ignored and they are treated as a single label.

No position correlation between two identical scans

If this parameter is set, then the position of a bar code label in the reading beam is not taken into account. Identical labels are treated as a single label.

NOTE	
	In general, the remaining parameters must not be changed. In the worst case, this could corrupt the read result!

10.2 Output tab

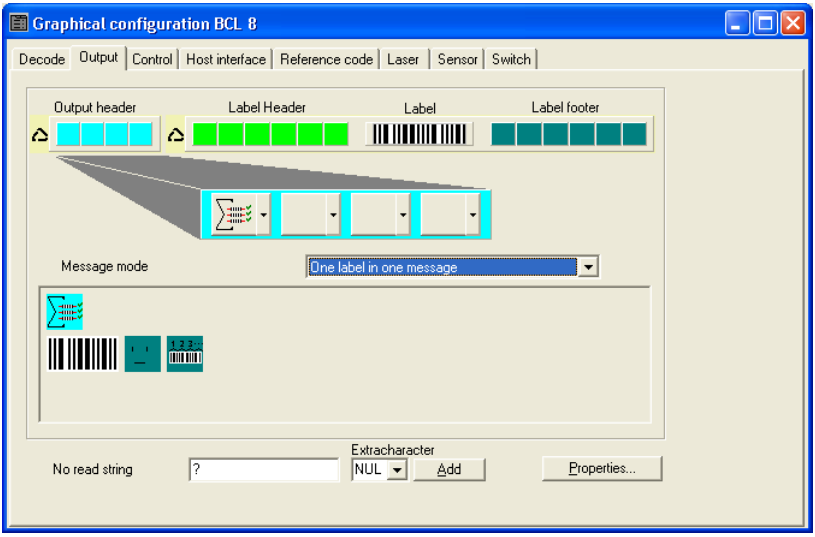

Figure 10.3: Output tab

Output header Select from the options listed below. The output header is sent in a separate message before the read result.

Label header The label header is set directly before the code data.

Label footer The label footer is appended directly to the code data.

Distribution of label information Selects whether the bar codes read are sent in concatenation or separately as individual strings.

NOTE	
	The structure of this message string is depicted symbolically in the preview window.

Text in the case of misreading

This character is set for each unrecognized bar code. Multiple characters (=string) may be entered here. Up to 20 characters are possible.

Features

Set the desired formatting modes and formatting characters as necessary.

10.3 Control tab

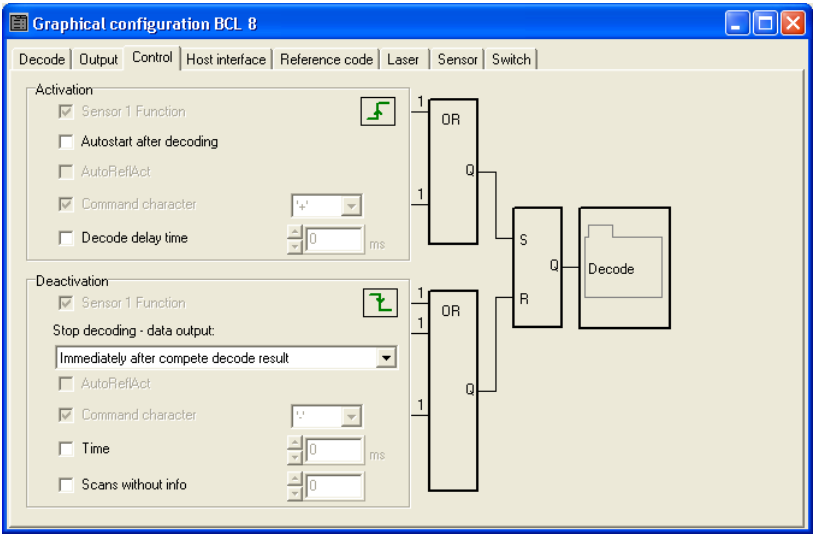

Figure 10.4: Control tab

Activation

Switching input 1 function	See menu "switching input"
Auto-start after decoding	In this mode, the scanner reads via an internal trigger signal with maximum performance. Attention: Up to 100 codes per second may be transmitted.
Command character	The standard online character for the trigger start is the ´+´ character. This character can be changed only via the tree structure.
Decode delay time	This point is usually used only for test purposes. After the time set here has passed, the scanner automatically reactivates itself following a reading gate end (e.g. in combination with "Autostart after decoding").

Deactivation

Switching input 1 function	See menu "switching input"
Immediately after the complete decoding result is available	If this item is activated, the read result is output immediately after the bar code is decoded. If the item is deactivated, the read result is sent only after the trigger signal is returned (=end of reading gate).
Command character	The standard online character for the trigger end is the ´-´ character. This character can be changed only via the tree structure.
Time	If the scanner is activated, the reading gate is automatically closed by the scanner after this preset time has elapsed (e.g. for test purposes).
Scans without info	Following a successful read, the scanner waits for this number of scans (sequential scans with no read result) before it automatically deactivates itself.

10.4 Host interface tab

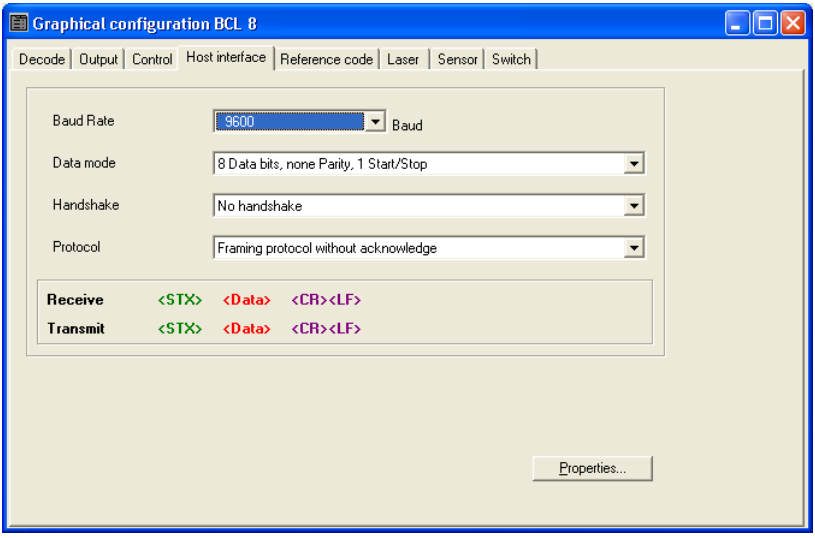

Figure 10.5: Host interface tab

Select the desired baud rate, the stop bits, the data bits, the parity and various transmission modes here. These parameters are not active until following the automatic "Power-On" test after the BCL 8 is switched on.

10.4.1 Properties window – Host interface tab

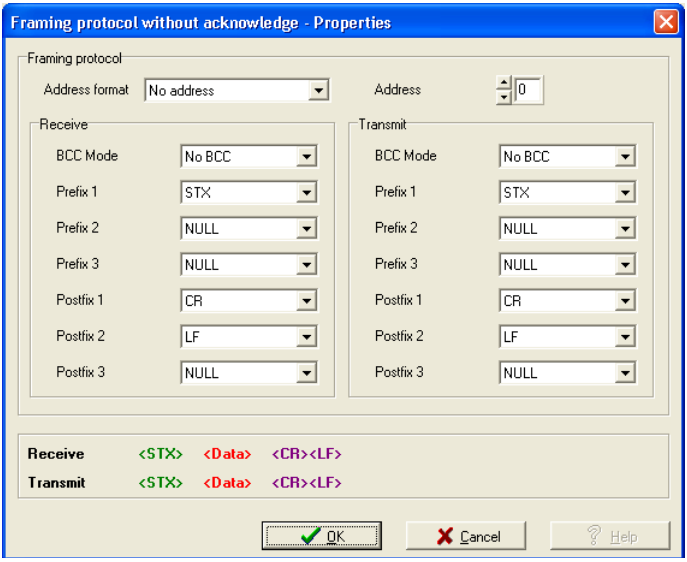

Figure 10.6: Standard settings for the Properties window – Host interface tab

Here, you can change the address settings and the protocol for sending and receiving.

To be able to continue to communicate with a BCL 8 following a parameter transfer, it may be necessary to make appropriate adjustments to the communication properties of the device in the **BCL Configuration Tool**.

10.5 Reference code tab

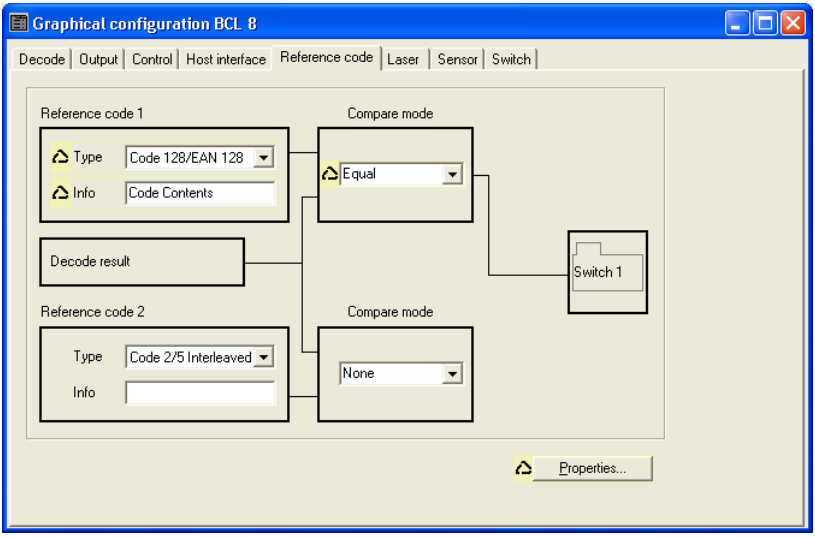

Figure 10.7: Reference code tab

A reference code is bar code information which is stored in the memory of the scanner.

This reference code can be compared with the current decoded bar code in various modes and, thus, the switching output be set appropriately. To do this, the switching output must still be set to "By comparison of reference code X" in the "Switch" menu.

One possibility to save the reference code is to manually enter the value in this menu. You can find further options of the reference code teach-in in the chapter on online commands.

Type Selection of code type.

Contents Contents of the reference code.

Comparison mode Select here how the internally stored reference code is to be compared with the decoded result.
-> For additional comparison possibilities, please select the "Properties" menu

10.6 Switching input tab

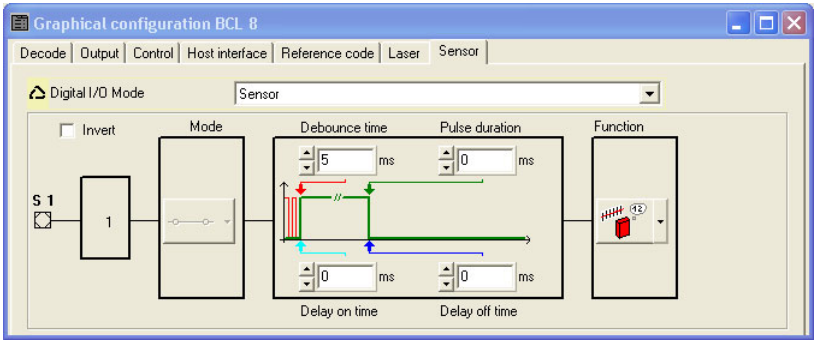

Figure 10.8: Switching input tab

Inverted Here, the input level can be inverted

Release Switching input enabled or disabled

Debounce time This time period must lapse until the trigger signal is regarded as valid.

Switch-on delay The trigger signal is passed on delayed by the specified time period.

Pulse duration If the value is higher than "0": duration of the activation, regardless of how long the trigger signal has been present.

Switch-off delay After the end of the trigger signal, the pulse is extended internally by this time period.

NOTE	
	If the switch-off delay is activated, the parameter "pulse duration" should be "0".

Function Event that is started when the switching input is activated.

ATTENTION!	
	Depending on wiring, either a switching input or a switching output is available on the BCL 8.

10.7 Laser tab

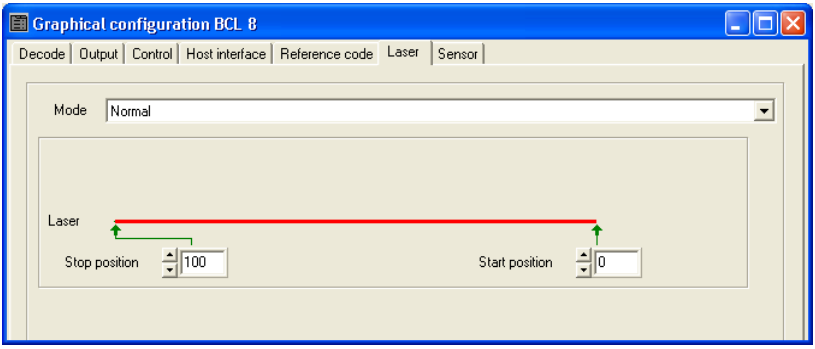

Figure 10.9: Laser tab

Start position and stop position Here, you can narrow down the reading field width of the laser beam.

Mode

- **Normal** – mode (1) with optional laser beam narrowing
  This is the standard mode without the reflector polling function.
- **Reflector polling with auto activation reading gate** – mode (2)
  In this mode, the decoding of the label is automatically started after the scanning beam to the reflector has been interrupted. Following successful decoding or renewed detection of the reflector, the reading gate is automatically closed. If the reflector is covered, the reading gate is automatically opened for decoding.
- **Reflector polling without auto activation reading gate, send an 'AR' command** – mode (3)
  In this mode, the decoding does not start automatically. Starting must be activated via a control or via a switching input. This mode is of interest if a programmable logic controller (PLC) wants to know whether or not the scanning beam to the reflector is currently interrupted. If this is the case, the PLC can start the decoding by sending the + command. The BCL sends an 'AR=1' command (freely configurable) if a reflector was detected or it sends an 'AR=0' command (freely configurable) if no reflector is present.
- **Reflector polling without auto activation reading gate, set the switch** – mode (4)

  Same as mode (3), except that the detection of whether or not a reflector is present is passed on via the switching output. As in mode 3, decoding is not activated automatically; this is the task of the control.
- **Reflector polling without auto activation reading gate, send an 'AR' command and set the switch** – mode (5)
  Combination of mode (3) and mode (4). In this mode, the BCL sends a message to the control and simultaneously activates the switching output.

Reflector polling

Reflector polling (**autoReflAct**) is an operating mode in which no external sensor is required for triggering. The scanner is activated and deactivated with the aid of a reflector (see Accessories) which must be mounted in the scanning range of the BCL 8.

For simple alignment in **autoReflAct** mode, please select the **AutoReflAct** Wizard.

Once called up, the wizard attempts to establish a connection to the connected BCL 8. If this is successfully, please select one of the four reflector polling modes under "Mode" from the menu which then appears. A screen similar to the following appears:

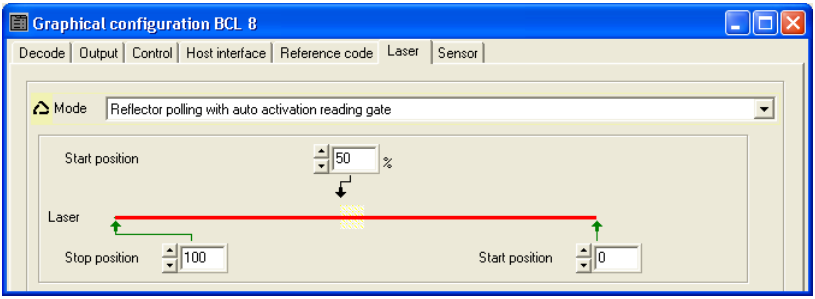

Figure 10.10: AutoReflAct Wizard

Upon activation of the "Search" button, the BCL 8 scans its reading field and attempts to find a reflector. To do this, the reflector must be positioned in the reading field of the scanner.

After a reflector has been detected, it passes on the start position of the reflector in its reading field.

By clicking "OK", the values are stored in the scanner and in BCLConfig.

The scanner is now ready for the AutoReflAct operating mode.

⚠ ATTENTION!	
⚠	If other reflective objects are located in the reading window of the scanner besides the reflector, the application is to be checked carefully, because these reflective parts could possibly cause a mistrigger in the scanner!

NOTE	
ℹ	The reflector should be mounted at a distance of max. 300 mm from the BCL 8.

10.8 Switch tab

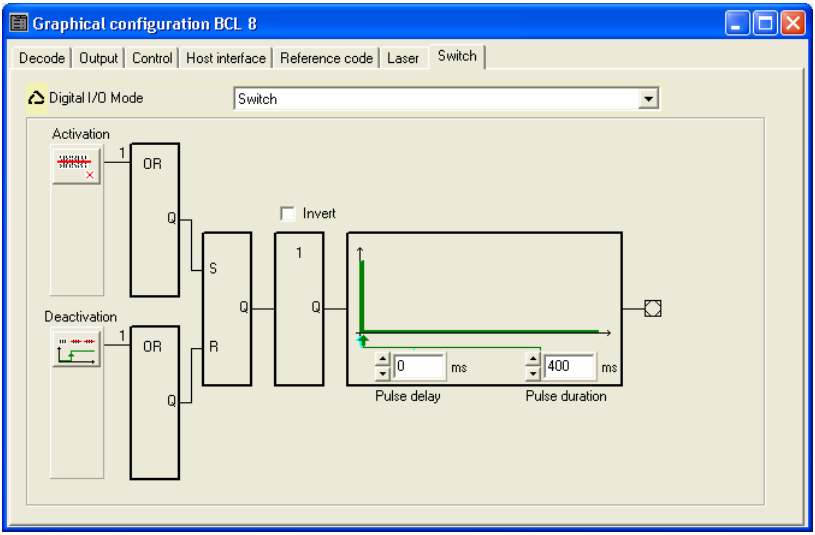

Figure 10.11: Switch tab

Activation Select the desired event which is to initiate the switching of the switching output here. Multiple events can also be simultaneously activated.

Deactivation Shown here is the event which results in the switching output being reset if the set pulse duration has not yet expired. Multiple events can also be simultaneously activated.

Inverted Level inverted.

Pulse duration Duration of the switching output impulse.

ATTENTION!	
⚠	Depending on wiring, either a switching input or a switching output is available on the BCL 8. By using an MA 8.1 or MA 8-01 connection unit, switching input and switching output can be used simultaneously.

11 Online commands

11.1 Overview of commands and parameters

Online commands can be used to send commands directly to the device for control and configuration. For this, the BCL 8 has to be connected to computer (host) via the serial interface.

For information on the transmission protocol, please see Chapter 7.3.2.

Using the **online commands** you can:

- control/decode the reading gate.
- read/write/copy parameters.
- carry out an automatic configuration.
- teach/set a reference code.
- call up error messages.
- call up statistical device information.
- carry out a software reset in order to reinitialize the device.

Syntax

Online commands consist of one or two ASCII characters followed by command parameters.

No separation characters may be entered between the command and the command parameter(s). Both small and capitalized letters can be used.

Example:

Command **'CA'**:	autoConfig function
Parameter **'+'**:	Activation
Transmitted is:	**'CA+'**

Notation

Commands, command parameters and returned data are enclosed between single quotation marks **' '** in the text of this manual.

Most online commands are acknowledged by the BCL 8 and any requested data returned. For commands that are not acknowledged, command execution can be observed or monitored directly on the device.

11.1.1 General online commands

Software version number

Command	'V'
Description	Requests device version information
Parameter	None
Acknowledg-ment	Ex.: **'BCL 8 V 01.10 05.10.2006'** The device type appears in the first line followed by the device's version number and date. The data which is actually displayed may vary from the values given here.

NOTE	
	You can use this command to check whether the communication to the connected computer is functional. If you do not receive an acknowledgment, please check the interface connections or the protocol.

Software reset

Command	'H'
Description	Carries out a software reset. The device is restarted and reinitialized, leaving it in the same state as when the supply voltage is switched on.
Parameter	No
Acknowledg-ment	**'S'** (start signal)

autoConfig

Command	'CA'
Description	Activates or deactivates the 'autoConfig' function. Certain label reading parameters are programmed automatically in the setup by the labels which the BCL 8 reads while the 'autoConfig' function is active.
Parameter	'+' Activates 'autoConfig' '/' Rejects the last code read '-' Deactivates 'autoConfig' and stores the decoded data in the current parameter set
Acknowledg-ment	'CSx' x Status '0' Valid 'CA' command '1' Invalid command '2' autoConfig could not be activated '3' autoConfig could not be deactivated '4' Result could not be deleted
Description	'xx yy zzzzzz' xx Code type of the read code '01' 2/5 Interleaved '02' Code 39 '06' UPC (A, E) '07' EAN '08' Code 128, EAN 128 '09' Pharmacode '10' EAN/UPC '11' Codabar '12' Code 93 yy No. of digits of the read code zzzzzz Contents of the decoded label. The – appears if the label was not correctly read.

Manual definition of the reference code

Command	'RS'
Description	This command can be used to define a new reference code in the BCL 8 by means of direct input via the serial interface. The data is saved in the parameter set according to your input under reference code 1 or 2 and stored in the working buffer for direct further processing.
Parameter	'RSyvxxzzzzzzzz' **y**, **v, x** and **z** are placeholders (variables) for the actual input. **y** Def. reference code no. '1' (Code 1) '2' (Code 2) **v** Storage location for reference code: '0' RAM+EEPROM '3' RAM only **xx** Def. code type (see Command 'CA') **z** Def. code information (1 … 30 characters)
Acknowledg-ment	'RSx' **x** Status '0' Valid 'Rx' command '1' Invalid command '2' Insufficient memory for reference code '3' Reference code has not been saved '4' Reference code invalid
Example	Entry = 'RS130678654331' (Code 1 (1), RAM only (3), UPC (06), code information)

Teach-in

Command	'RT'
Description	This command enables a reference code to be defined quickly by reading an example label.
Parameter	**'RTy'** **y** Function **'1'** Defines reference code 1 **'2'** Defines reference code 2 **'+'** Activates the definition of reference code 1 or 2 **'-'** Ends the teach event
Acknowledg-ment	The BCL 8 first responds with the command **'RS'** and corresponding sta-tus (see Command 'RS'). After a bar code has been read, it sends the result in the following format: **'RCyvxxzzzzz'** **y**, **v**, **x** and **z** are placeholders (variables) for the actual input. **y** Def. reference code no. **'1'** (Code 1) **'2'** (Code 2) **v** Storage location for reference code **'0'** RAM+EEPROM **'3'** RAM only **xx** Def. code type (see Command 'CA') **z** Def. code information (1 … 30 characters)

NOTE	
	With this function, only code types are recognized that are identified using the 'autoConfig' function or which were set in the set-up.

↳ After each reading via an 'RTy' command, explicitly switch off the function again since failure to do so will interfere with other commands as well as prevent execution of a new 'RTy' command.

Reading a reference code

Command	'RR'
Description	The command reads out the reference code defined in the BCL 8. If no parameters are specified, all defined codes are output.
Parameter	<Reference code number> '1' Reference code 1 '2' Reference code 2
Acknowledg-ment	If no reference codes are defined, the BCL 8 responds with the 'RS' command and corresponding status (see Command 'RS'). For valid codes, the output corresponds to the following format: RCyvxxzzzzzz y, v, x and z are placeholders (variables) for the actual input. y Def. reference code no. '1' (Code 1) '2' (Code 2) v Storage location for reference code '0' RAM+EEPROM '3' RAM only xx Def. code type (see Command 'CA') z Def. code information (1 … 30 characters)

Alignment mode

Command	'JP'
Description	This command is used for simplified mounting and alignment of the BCL 8 in static installation situations. After activating the function with **'JP+'**, the scanner continuously supplies status information to the serial interfaces. With this online command, the scanner is set to terminate the decoding after 100 successfully decoded labels and output the status information. Subsequently, the read process is reactivated automatically. As status, the output returns the following values: • scans which contain the valid label information on the basis of 100 scans, • the decoding result. These values can be used to determine the decoding quality. In addition to the output of the status information, the laser beam is used to display the reading quality. Depending on how many labels were able be extracted, the duration of the laser's "off" time increases. If the reading quality is high, the laser beam flashes in brief, regular intervals. The worse the decoder decodes, the longer the pauses become during which the laser is switched off.
Parameter	**'+'**: Starts the alignment mode. **'-'**: Ends the alignment mode.
Acknowledgment	**'xxxxx_yyyyy'** **xxxxx**: "Scans since reading gate release" (scans_with info): Number of scans that contain valid label information. The maximum value is 100. **yyyyy**: Bar code information.

11.1.2 Online commands for system control

Activating sensor input

Command	'+'
Description	The command activates decoding.
Parameter	None
Acknowledg-ment	None

Deactivating sensor input

Command	'-'
Description	The command activates decoding.
Parameter	None
Acknowledg-ment	None

Activate switching output

Command	'OA'
Description	The command activates a selected switching output.
Parameter	**'OAx'**: Activate switching output **x** Switching output No. **'1'** (output 1)
Acknowledg-ment	None

Deactivate switching output

Command	'OD'
Description	The command deactivates a selected switching output.
Parameter	**'ODx'**: Deactivate switching output **x** Switching output No. **'1'** (output 1)
Acknowledg-ment	None

11.1.3 ’Online’ commands for parameter set operations

Definitions

- **<BCC type>** Type of checksum calculation.
  ’0’: No checksum
  ’3’: XOR checksum (mode 3)
- **<PS type>** Parameter set type
  ’0’: Current parameter set (data stored in the EEPROM (non-volatile))
  ’1’: Reserved
  ’2’: Standard parameter set (not changeable)
  ’3’: Operating values (data in the RAM, will be lost after reset)
- **<Status>** Mode of parameter processing
  '0': Does not perform a reset following the write operation; no other parameters follow.
  '1': Does not perform a reset following the write operation; other parameters follow.
  '2': Subsequently performs a reset, no other parameters follow.
- **<Start address>** Relative address of the parameter within the parameter set
- **<Para0L> <Para0H>… <Para122L> <Para122H>**:
  Parameter set data of the message. The sequence of the data is arranged identically to the BCL 8, i.e. when a word is transmitted, first the low byte is sent then the high byte. The parameter set data is converted for transmission from HEX format to a 2-byte-ASCII format. During the conversion, two ASCII characters - representing the lower and higher nibbles - are created for each HEX value.
  Example:

Decimal	Hex	Transmission
4660	0x1234	**'1' '2' '3' '4'** = 31h 32h 33h 34h

- Para0H = 31h, Para0L = 32h, Para1H = 33h, Para1L = 34h
  Taking into consideration the maximum message length and the remaining command parameters, a maximum of 123 bytes of parameter data (246 bytes of message data) can be transmitted in a single operation.
  Valid values: '0' … '9', 'A' … 'F'
- **<Acknowledgement>**:
  Acknowledgment of the transmitted message
  '0' valid transmission
  '1' invalid message
  '2' invalid length of message
  '3' invalid block check type
  '4' invalid block check checksum
  '5' invalid data length
  '6' invalid message data
  '7' invalid start address
  '8' invalid parameter set
  '9' invalid parameter set type

Copy parameter set

Command	'PC'
Description	The command copies complete parameter sets.
Parameter	'03' Copy parameters from the EEPROM into the RAM and initialize all associated functions '20' Copy standard parameters from the FLASH into the EEPROM and RAM and initialize all relevant functions '30' Copy parameters from the RAM into the EEPROM
Acknowledg-ment	'PSx' x Status '0' valid transmission '1' invalid message '2' invalid length of message '3' invalid block check type '4' invalid block check checksum '5' invalid data length '6' invalid message data '7' invalid start address '8' invalid parameter set '9' invalid parameter set type
Example	'PC20' loads the default parameters

Request parameter set from the BCL 8

Command	'PR'
Description	The command requests parameter data from the BCL 8. The <PS type> parameter indicates from which parameter set the data are to be trans-ferred
Parameter	<BCC type> <PS type> <Start address> <Data length>
Acknowledg-ment	'PSx' x Status '0' valid transmission '1' invalid message '2' invalid length of message '3' invalid block check type '4' invalid block check checksum '5' invalid data length '6' invalid message data '7' invalid start address '8' invalid parameter set '9' invalid parameter set type
Example	'PR00102004' Beginning with address 102, four (004) bytes are read out and transmitted

Acknowledge parameter message

Command	'PS'
Description	The command acknowledges the received message and delivers an acknowledgment status which indicates whether the message was valid or invalid.
Parameter	'PSx' x Status '0' valid transmission '1' invalid message '2' invalid length of message '3' invalid block check type '4' invalid block check checksum '5' invalid data length '6' invalid message data '7' invalid start address '8' invalid parameter set '9' invalid parameter set type

Transfer parameters

Command	'PT'
Description	The command transmits parameter data starting from the defined address and stores them in an intermediate buffer. If the status indicates that further messages follow, these are also stored in the intermediate buffer before they are then stored under the corresponding parameter set type in the EEPROM. The transmission can optionally occur with a block check test of the message data.

Command	'PT'
Parameter	<BCC type> <PS type> <Status> <Start address> <Para0L> <Para0H> [… <Para122L>][<BCC>]
Acknowledg-ment	**'PSx'** **x** Status **'0'** valid transmission **'1'** invalid message **'2'** invalid length of message **'3'** invalid block check type **'4'** invalid block check checksum **'5'** invalid data length **'6'** invalid message data **'7'** invalid start address **'8'** invalid parameter set **'9'** invalid parameter set type
Example	**'PT03203305'** Address 33 (equal scans) is set to 5. Save in RAM with reset (immediate acceptance of the change and tempo-rary storage)

12 Maintenance

12.1 General maintenance information

Usually, the BCL 8 bar code reader does not require any maintenance by the operator.

Cleaning

Should it become soiled, clean the glass window of the BCL 8 with a soft cloth.

NOTE	
	Do not use aggressive cleaning agents such as thinner or acetone for cleaning the device.

12.2 Repairs, servicing

Repairs to the device must only be carried out by the manufacturer.

↳ Contact your Leuze distributor or service organization should repairs be required.
For addresses, please refer to the back page of this operating manual.

12.3 Diagnostics and troubleshooting

Error	Possible error cause	Measures
Status LED: off	No supply voltage connected to the device.	Check supply voltage.
Status LED: flashing red	There is a device warning.	Query diagnostic data in the device and carry out the resulting measures or reset.
Status LED: continuous red light	Serious error, no function possible.	Internal device error, send in device for testing.
Status LED: flashing orange	Service operation is active.	Reset service operation, e.g. by resetting or interrupting the supply voltage
Decode LED	No error, see Table 4.2 on page 14.	
No communication possible	Incorrect wiring.	Check wiring.
	Wrong interface selected.	Select correct interface in the BCLconfig tool.
	Different protocol settings.	Check protocol settings in the BCL 8 and BCLconfig tool or switch the BCL 8 to service mode.
No code reading possible	Code reading not possible (quality).	Improve code quality! Entire code in laser line?
	Code is not enabled.	Check entries in the code table (type and length).
	Excessive reflections.	Increase angle of the laser beam to > 10° with respect to vertical.

12.4 Example bar code label types

Code type 01: Interleaved 2 of 5

Module 0.3

1122334455

Code type 02: Code 39

Module 0.3

135AC

Code type 11: Codabar

Module 0.3

a121314a

Code 128

Module 0.3

abcde

Code type 08: EAN 128

Module 0.3

leuze

Code type 06: UPC-A

SC 2

1 23456 78901 2

Code type 07: EAN 8

SC 3

3456 7890

Code type 10: EAN 13 Add-on

SC 0 S

1 122334 455666

77889

Figure 12.1: Example bar code label types