IGSU 14D

Ultrasonic label fork

en 04-2018/10 50125952-03

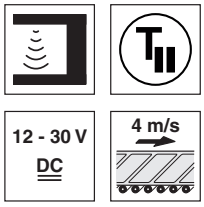

4mm

- Ultrasonic forked sensor for universal application
- Large mouth width, hence also suitable for booklets or fan-fold flyers
- *easyTeach* function:
  press button - dispense labels - done!
- ALC function (auto level control):
  maximum function reserve via automatic online optimization of the switching threshold
- Warning output for indicating teach or function errors
- **NEW** – static teach on base material, no loss of labels
- **NEW** – *easyTune* for fine adjustment of the switching threshold

Accessories:

(available separately)

- Short carriage (part no. 50114055)
  As replacement for the series part.
- Extended carriage (Part No. 50114056)
  For better guiding of oversized labels.
  The carriage can be shortened at any point.
- M12 connectors (KD …)
- Cables with M 12 connector (KD...)

Dimensioned drawing

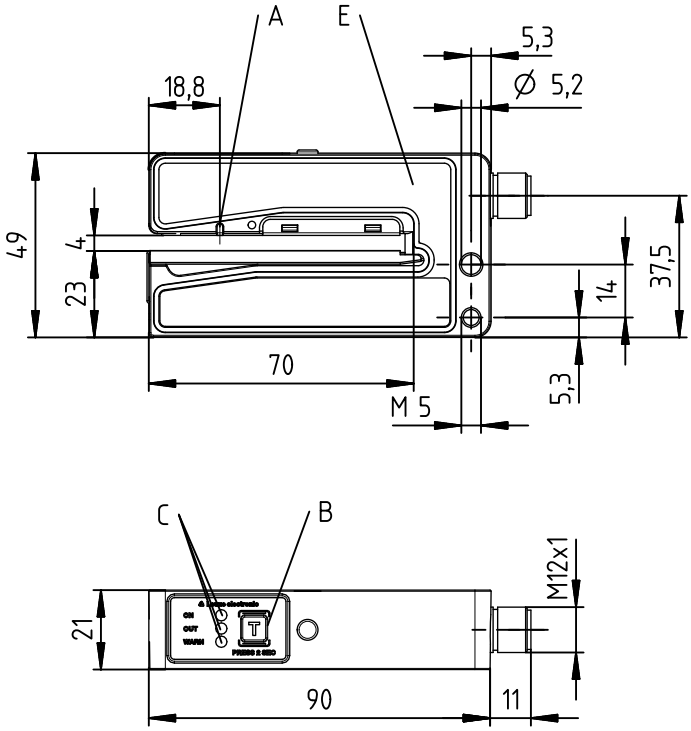

Dimensioned drawings for **extended carriage** and **tape guide**, see Mechanical accessories on Page 10

A Sensor marker (center of label tape)
B Teach-in button
C Indicator diodes (ON, OUT, WARN)
E Sensor

Electrical connection

IGSU14D…/**6.**…-S12

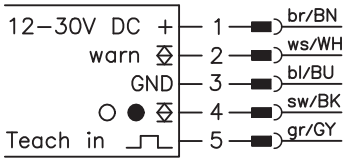

IGSU14D…/**6D.**…-S12

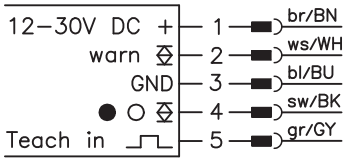

We reserve the right to make changes • PAL_IGSU14D_en_50125952_03.fm

ПРОМЭЛЕКТРОНИКА / sales@prom-elec.com

Technical data

Physical data

Mouth width		4mm
Mouth depth		68mm
Label length		≥ 5mm
Label width		≥ 10mm
Label gap		≥ 2mm
Conveyor speed		≤ 240m/min (4m/s)
Conveyor speed during teach-in		≤ 50m/min (0.83m/s)
Typ. response time		≤ 200µs
Repeatability [1]		± 0.2mm
Readiness delay		≤ 300ms acc. to IEC 60947-5-2

Electrical data

Operating voltage U_B [2]		12VDC (-5%) … 30VDC (incl. residual ripple)
Residual ripple		≤ 15% of U_B
Open-circuit current		≤ 80mA
Switching output [3]	…/6.	1 push-pull switching output Pin 4: PNP light switching, NPN dark switching
	…/6D.	1 push-pull switching output Pin 4: PNP dark switching, NPN light switching
Warning output [2]		1 push-pull switching output Pin 2: active low (normal operation high, event case low)
Function switching output IGSU		Light/dark switching, adjustable
Signal voltage high/low		≥ (U_B-2V)/≤ 2V
Output current		≤ 100mA
Capacitive load		≤ 0.5µF

Indicators

Green LED	Ready
Green LED flashing	Teach-in initiated
Yellow LED	Switching point in the label gap
Red LED	Teaching error / function error

Mechanical data

Housing	IGSU14D…	Diecast zinc, painted silver
	IGSU14DN…	Diecast zinc, chemically nickel-plated
Weight		270g
Ultrasonic transducer		Piezoceramic [4]
Connection type		M12 connector, 5-pin

Environmental data

Ambient temp. (operation/storage)	0°C … +60°C/-40°C … +70°C
Protective circuit [5]	1, 2
VDE protection class	III
Degree of protection	IP 65
Standards applied	IEC 60947-5-2, UL 508
Certifications	UL 508, C22.2 No.14-13 [2] [6]

Additional functions

Teach-in input

Active/Not active	≥ 8V/≤ 2V
Input resistance	15kΩ

1) Depending on conveyor speed, label length and spacing between labels
2) For UL applications: use is permitted exclusively in Class 2 circuits according to NEC
3) The push-pull switching outputs must not be connected in parallel
4) The ceramic material of the ultrasonic transducer contains lead zirconium titanate (PZT) and lead (Pb)
5) 1=polarity reversal protection, 2=short circuit protection for all outputs
6) These proximity switches shall be used with UL Listed Cable assemblies rated 30V, 0.5A min, in the field installation, or equivalent (categories: CYJV/CYJV7 or PVVA/PVVA7)

UL REQUIREMENTS

Ambient Temperature Rating: 50°C
Enclosure Type Rating: Type 1

Marking on the sensor

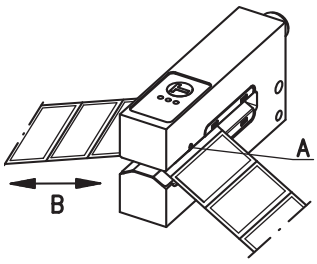

A Label center position
B Label run

Notes

Observe intended use!

- This product is not a safety sensor and is not intended as personnel protection.
- The product may only be put into operation by competent persons.
- Only use the product in accordance with its intended use.

- To achieve high repeatability, the label tape must be slightly under tension.
- Align the label tape according to the sensor's marker "Label center position" (see also marking on sensor).
- The label material used determines the achievable precision and the reliability of gap detection!
- Light switching: signal in the label gap.
- Dark switching: signal on the label.

Order guide

The sensors listed here are preferred types; current information at www.leuze.com.

	Designation	Part no.
With painted housing		
Pin 4: switching output PNP light switching; pin 2: warning output active low	IGSU14D/6.3-S12	50126784
Pin 4: switching output PNP dark switching; pin 2: warning output active low	IGSU14D/6D.3-S12	50126785
With painted housing and extended carriage		
Pin 4: switching output PNP light switching; pin 2: warning output active low	IGSU14D/6.31-S12	50126786
With chemically nickel-plated housing		
Pin 4: switching output PNP light switching; pin 2: warning output active low	IGSU14DN/6.3-S12	50126788
Pin 4: switching output PNP light switching; pin 2: warning output active low, customer-specific	IGSU14DN/6.3K-S12	50126789
With chemically nickel-plated housing and tape guide		
Pin 4: switching output PNP light switching; pin 2: warning output active low	IGSU14DN/6.3G-S12	50125790

Part number code

I	G	S	U	1	4	D	N	/	6	D	.	3	1	G	-	S	1	2

Outputs

I	Warning output (Pin 2)

Operating principle

GSU	Ultrasonic forked sensors

Series

14D	Series 14, generation D

Housing

N	Diecast zinc, chemically nickel-plated
Free	Diecast zinc, painted silver

Switching output type (pin 4)

6	Push-pull

Switching output function

D	Pin 4: PNP switching on the label, NPN switching in the gap
Free	Pin 4: PNP switching in the gap, NPN switching on the label

Teach-in

3	Teach-in by means of control button on the sensor

Equipment

1	With extended carriage
G	With tape guide
1G	With extended carriage and tape guide
K	Customer-specific design
YN	Customer-specific design

Connection technology

S12	M12 connector, 5-pin

Overview of operating structure for IGSU 14D

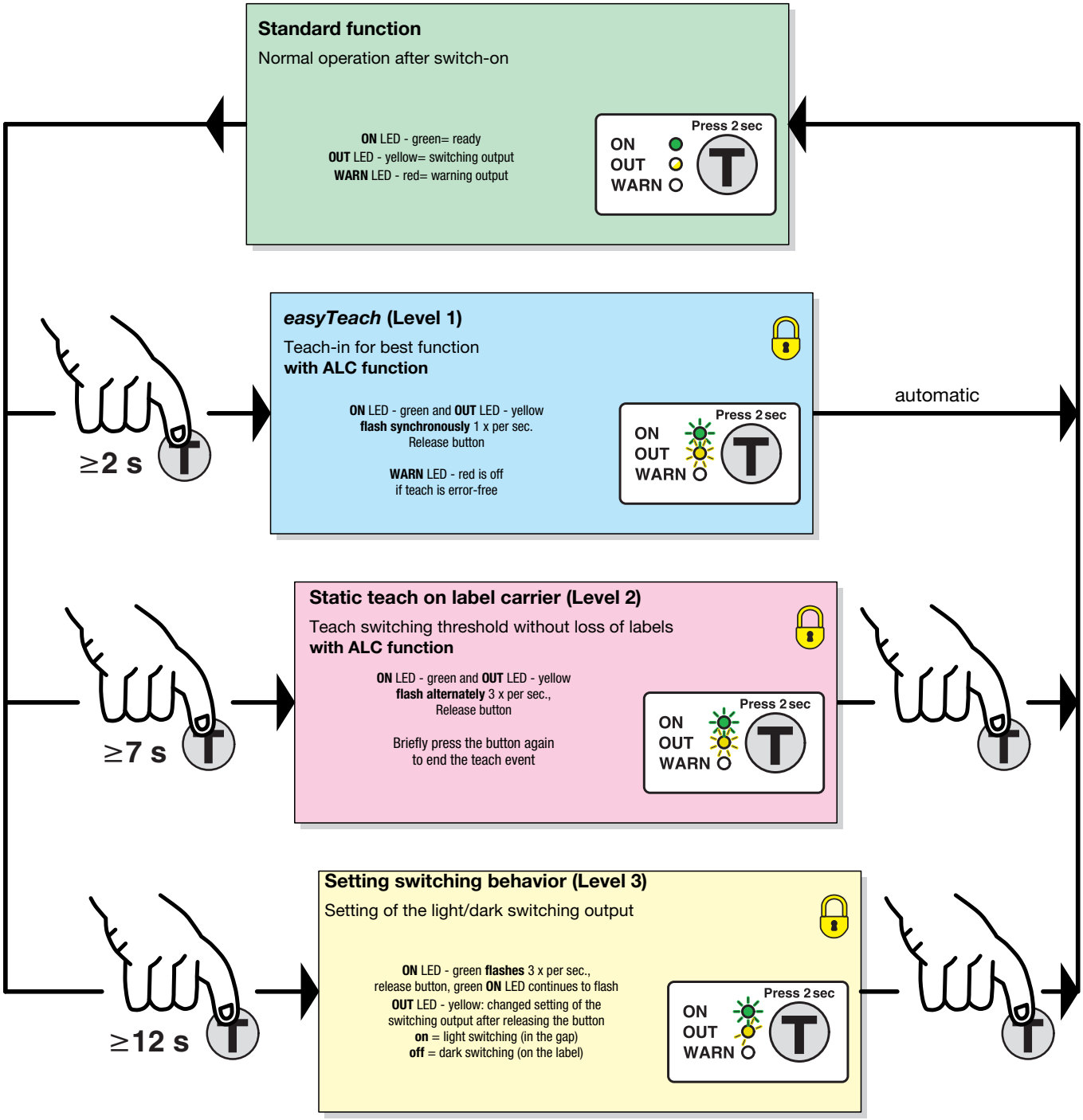

= function lockable through constant application of U_B on the teach input

IGSU 14D standard functions

During operation the sensor is always in this function. The sensor detects label gaps with high precision and speed. This is indicated by the yellow LED and the switching output.

Indicators:

ON LED - green	Constantly ON when operating voltage is applied.
OUT LED - yellow	Indicates the switching signal. LED is ON if the sensor detects label gaps. The display is independent of the output setting.
WARN LED - continuous red light	OFF: error-free operation. ON: teaching error caused by unfavorable label material, ALC function outside of the control window.
WARN LED - flashing red	Short-circuit at the switching output and/or warning output. All outputs are switched to tri-state until the error is rectified.

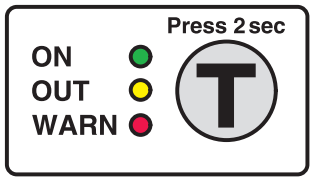

Operation:

The teach button must be pressed for at least 2 seconds to operate the device. The button can be electrically disabled to prevent accidental operation.

ALC function (auto level control):

In each teach event, the current signal values in the sensor are digitally determined, resulting in the optimum switching threshold being calculated for maximum function reserve. All values are saved and are non-volatile, retaining their validity as long as the dynamic parameters of the system remain unchanged and the material is not changed.

Signal changes can result each time the roll is changed, even with labels that are apparently the same. This is caused, for example, by material variations (material thickness, homogeneity, etc.) which affect the acoustic impedance of the system. Even changes of the dynamic parameters (e.g. tape tension, middle position, jitter, etc.) can have a negative affect on the function reserve of the sensor.

The ALC function now automatically corrects the switching threshold in such a way that the maximum function reserve is always available during operation - the sensor works absolutely reliably and free of errors.

Note

When changing to another type of label, a new adjustment must generally be carried out by carrying out a new teach-in event.

ПРОМЭЛЕКТРОНИКА / sales@prom-elec.com

Warning output

The warning output is activated if the red LED on the device is illuminated. This is the case for the following states:

- Teaching error (see description)
- "ALC function faulty" error (control limit reached: clean device, align and reteach)

Sensor adjustment (teach-in) via teach button

easy Teach while the label tape is passing through

Preparation: Insert label tape into the sensor.

- **Press the teach button until green and yellow LEDs flash synchronously.**
- **Release teach button.**
- **Advance the label tape through the sensor at a max. speed of 50 m/min. The sensor indicates the tape transport by faster simultaneous flashing of the green and yellow LED.**
- **Ready.**

If sufficient teach values are determined, the sensor automatically terminates the teach event and goes into standard mode. The transport of the label tape can be stopped immediately. The number of labels to be transported is always based on the material combination: from experience, the value is between 2 and 10 labels.

If the teach event is faulty (e.g. unfavorable material combination, uneven transport, jittering during transport), the red LED illuminates and the warning output is activated. Repeat teach event. If the fault cannot be rectified, the label material cannot be detected with the IGSU 14D.

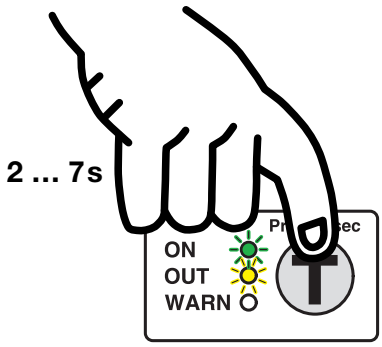

The **green** and the **yellow** LEDs flash **synchronously** approx. **1**x per sec.

Static teach on the label carrier without transport

Preparation: depending on the label size, pull off one or more labels from the carrier and transport the blank area into the sensor.

- **Press the teach button until green and yellow LEDs flash alternately.**
- **Release teach button.**
- **Briefly press the button again to end the teach event**

With this teach event, a one-point calibration is performed on the blank carrier. This process is particularly advantageous because there is no loss of labels during the teach.

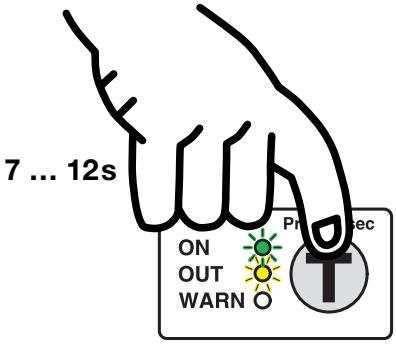

The **green** and the **yellow** LEDs flash **alternately** approx. **3**x per sec.

Note

With the *easy Teach* process, a two-point calibration is performed which, with respect to detection reliability, is generally to be preferred over the static teach.

easyTune – Manual fine tuning of the switching threshold

With **homogeneous label material**, the signal in the gap between two labels is much larger compared to the signal on the label. For the taught switching threshold, there is a high function reserve in both the gap as well as on the label, and the sensor functions reliably.

To achieve a better function reserve, it can be advantageous to change the taught switching threshold, especially for **inhomogeneous label material**. Used for this purpose is the *easyTune* function, which is similar in principle to a potentiometer. The switching threshold can be adjusted by pressing the button quickly or for a longer period of time.

Pressing the teach button quickly (2 ms … 200 ms) **reduces the switching threshold** slightly; **pressing the button for a longer period of time** (200 ms … 2 s) **increases the switching threshold** slightly. The change resulting from each press of the button is small. The button may need to be pressed several times in order to achieve a stable operating point. The sensor confirms each press of the button with short or long flash of the green LED. If the upper or lower end of the adjustment range is reached, the green and yellow LEDs flash at a considerably faster frequency and the red LED is illuminated for one second.

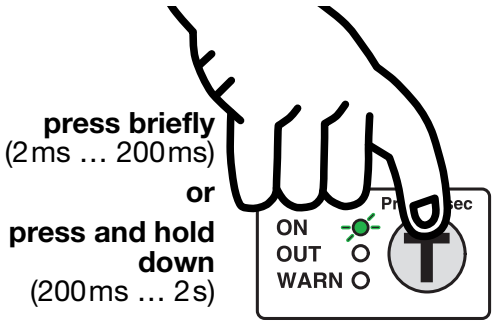

The **green** LED flashes **one time** quickly or for a longer period time after the button is pressed

Note

Please note:
easyTune deactivates the ALC function!

Example:

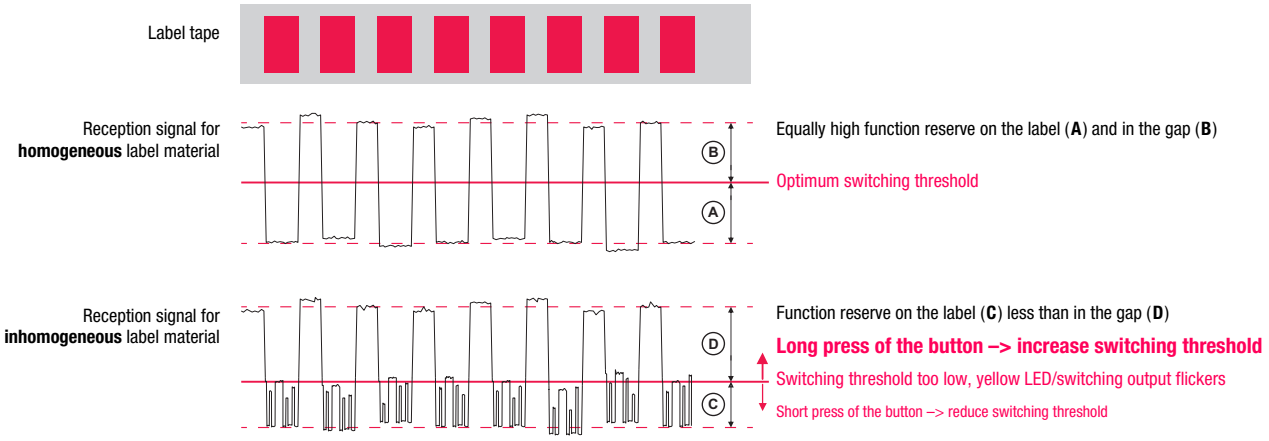

Recommended settings:

Observation	Change to the switching threshold	Measure
After teaching, the yellow LED and the switching output flicker if the label is moved through the sensor, i.e., the function reserve on the label ((**C**) in the example) is too low.	**Increase**	Repeatedly press the **teach button** for a **longer period of time** until the sensor detects the moving label stably and without interruption.
In **rare** cases, a highly inhomogeneous carrier tape can affect the functional reliability. The yellow LED and the switching output flicker if the blank carrier tape is moved through the sensor without labels, i.e., the function reserve on the carrier is insufficient.	**Decrease**	Repeatedly press the **teach button quickly** until the sensor detects the moving carrier tape without labels stably and without flickering.

Adjusting the switching behavior of the switching output (light/dark switching)

- **Press teach button until only the green LED flashes.**
- **Release the teach button - the green LED continues to flash, the yellow LED indicates the changed switching behavior after the button was released.**
- **Yellow LED ON = output switches on light (in the gap).**
  Yellow LED OFF = output switches on dark (on the label).
- **Ready.**

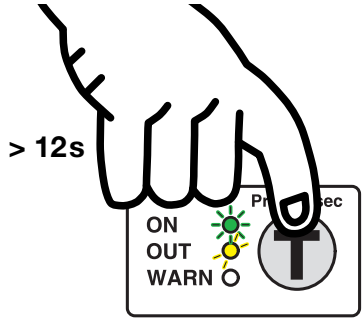

The **green** LED flashes approx. **3**x per sec.

Sensor adjustment (teach-in) via teach input

The following description applies to PNP switching logic!

U_{Teach}	**Not connected**	Internal pull-down resistor pulls the input down to zero	Teach button can be operated; all functions adjustable
$U_{Teach\ low}$	**≤ 2V**	Low level	Teach button can be operated; all functions adjustable
$U_{Teach\ high}$	**≥ (U_B-2V)**	High level	Teach button disabled; button has no function
U_{Teach}	**> 2V … < (U_B-2V)**	Not permitted	Level not defined; current state is retained

The device setting is stored in a fail-safe way. A reconfiguration following power failure or switch-off is thus not required.

easyTeach while label tape is passing through

Preparation: Insert the label tape in the correct position in the sensor (align the middle of the tape to the sensor marking).

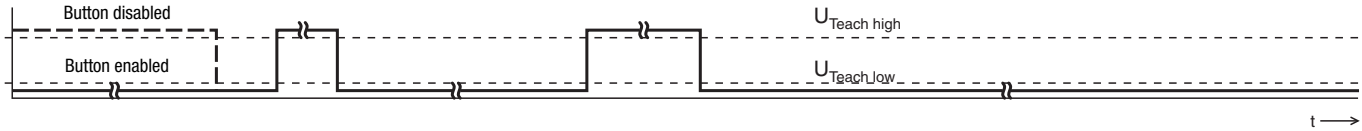

After switching on the supply voltage and after the delay before start-up has concluded (≤ 300 ms), the teach button on the device can be operated.	2 x 4 … 100 ms Only if the teach button was disabled before the teach.	The teach button is disabled after the 1st edge transition.	***easyTeach***: t_{Teach} = **4 … 900 ms**	4 … 100 ms	Teach event starts: The green and yellow LEDs flash simultaneously approx. 1x per second. Advance labels at a tape running speed of max. 50 m/min through the sensor until the teach event is automatically terminated by the sensor, i.e. the LEDs no longer flash. The number of labels which must be transported depends on the carrier and label material. During the event, the button on the device is disabled, it can be operated again after this.

The red LED illuminates if a teaching error occurs (e.g. the label cannot be reliably detected due to insufficient signals).

Regardless of the state, the green LED illuminates upon conclusion of the teach event; the yellow LED indicates the current switching state.

Static teach on the label carrier without transport

Preparation: Pull off one label from the tape and insert the empty spot into the fork (align the middle of the tape to the sensor marking).

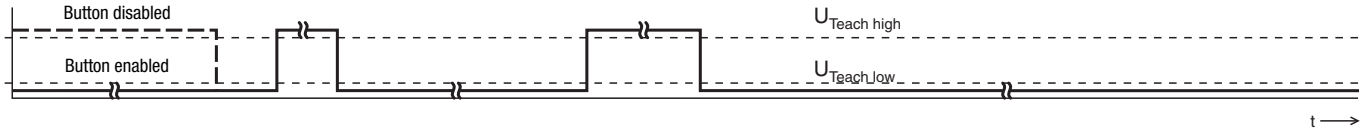

After switching on the supply voltage and after the delay before start-up has concluded (≤ 300 ms), the teach button on the device can be operated.	2 x 4 … 100 ms	Only if the teach button was disabled before the teach. The teach button is disabled after the 1st edge transition.	***Static teach***: t_{Teach} = **1,000 … 2,000 ms**	4 … 100 ms	Teach event starts: The green and yellow LEDs flash alternately approx. 1x per second. At the end of the teach event, the yellow LED illuminates. During the event, the button on the device is disabled, it can be operated again after this.

The red LED illuminates if a teaching error occurs (e.g. the label cannot be reliably detected due to insufficient signals).

Adjusting the switching behavior of the switching output – light/dark switching

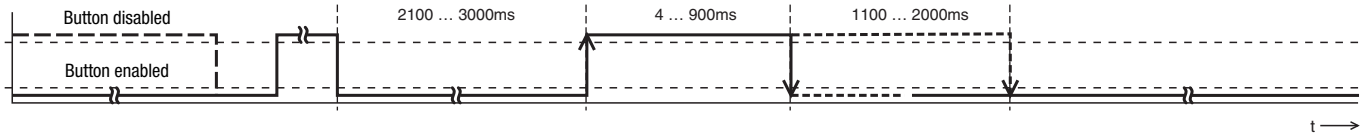

After switching on the supply voltage and after the delay before start-up has concluded (≤ 300 ms), the teach button on the device can be operated.	2 x 4 … 100 ms	The teach button is disabled after the 1st edge transition. The teach button is disabled after the 1st edge transition.	**Teach switching output:** t_{Teach} = **2,100 … 3,000 ms**	Switching output light switching (4 … 900 ms) Switching output dark switching (1100 … 2000 ms)	The teach button is enabled again.

Notices for integrating the sensor in a control concept

If the sensor is taught externally via a control, it may be necessary to receive acknowledgment from the sensor with respect to its current teach state. Use the following chart for this purpose:

Operating mode	Reaction from sensor
Dispensing mode	Dynamic output signal: alternates between gap and label
Teach	Static output signal: the state prior to the teach event is frozen (output in tri-state)
Teach OK	Output signal is dynamic again—warning output not active
Teach faulty	Output signal is dynamic again—warning output active; repeat teach event if necessary

Locking the teach button via the teach input

A **static high signal** (≥ 4 ms) at the teach input locks the teach button on the device if required, such that no manual operation is possible (e.g., protection from erroneous operation or manipulation).

If the teach input is not connected or if there is a static low signal, the button is unlocked and can be operated freely.

Mechanical accessories

Extended carriage

The extended carriage (part no. 50114056) can be replaced by the customer with the standard carriage (part no. 50114055).

The carriage can be shortened at any point.

Alternatively, the sensor can also be delivered in the version with factory-mounted carriage (see order guide).

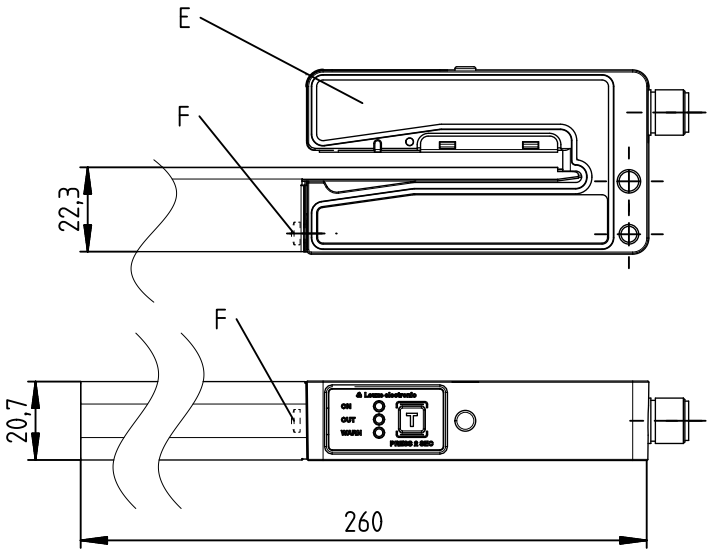

E Sensor
F Fastening screw for carriage

Tape guide

The correct transport of the label tape is decisive for the switching accuracy and the operational safety of the sensor.

To achieve an optimum result, a tape guide was developed for the sensor.

Adjusting the tape holder:

If correctly adjusted, the tape more or less follows the contour of the carriage and the label tape slides over the lower fork of the forked sensor (see also figure "Marking on the sensor" on page 2).

We recommend the use of forked sensors with factory-mounted tape guide (see order guide).

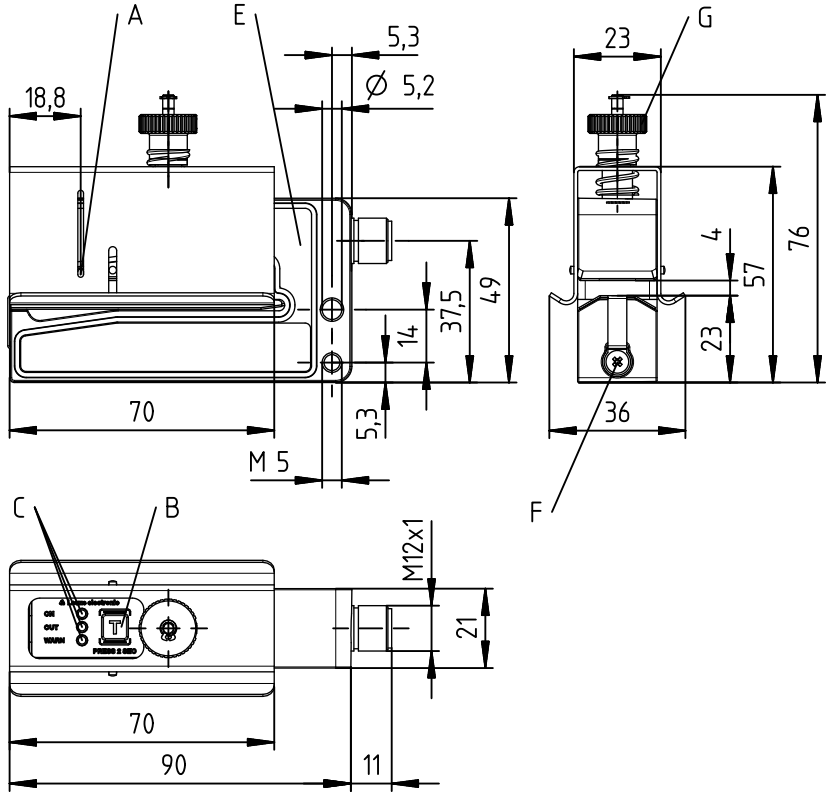

A Sensor marker (center of label tape)
B Teach-in button
C Indicator diodes (ON, OUT, WARN)
E Sensor
F Fastening screw for carriage
G Adjustment screw for height of tape holder