SMART
SENSOR
BUSINESS

Leuze electronic

the sensor people

BCL 148
Bar Code Reader

EN 2019/10/16 - 50132712
We reserve the right to make technical changes

Original operating instructions

ПРОМЭЛЕКТРОНИКА / sales@prom-elec.com

© 2019
Leuze electronic GmbH & Co. KG
In der Braike 1
D-73277 Owen / Germany
Phone: +49 7021 573-0
Fax: +49 7021 573-199
http://www.leuze.com
info@leuze.com

1 About this document ... 5
1.1 Used symbols and signal words ... 5
2 Safety ... 7
2.1 Intended use ... 7
2.2 Foreseeable misuse ... 8
2.3 Competent persons ... 8
2.4 Disclaimer ... 8
2.5 Laser safety notices ... 9
3 Device description ... 10
3.1 Device overview ... 10
3.1.1 The BCL 148 bar code reader ... 10
3.1.2 Stand-alone operation ... 10
3.2 Performance characteristics ... 10
3.3 Device construction ... 11
3.4 Connection technology ... 11
4 Mounting ... 12
4.1 Selecting a mounting location ... 12
5 Electrical connection ... 14
5.1 Operating voltage ... 14
5.2 Housing ground ... 14
5.3 Pin assignment ... 15
5.4 Switching input/addressing/protocol changeover ... 16
5.4.1 Switching input ... 16
5.4.2 Addressing ... 17
5.4.3 Protocol changeover ... 18
5.5 PC or terminal connection ... 18
6 Configuration and diagnostics software - Sensor Studio ... 19
6.1 System requirements ... 20
6.2 Installing Sensor Studio ... 20
6.2.1 Downloading configuration software ... 20
6.2.2 Installing the Sensor Studio FDT frame ... 21
6.2.3 Install the communication DTM and device DTM ... 21
6.2.4 Connecting device to PC ... 21
6.3 Starting Sensor Studio ... 22
6.4 Exiting Sensor Studio ... 23
6.5 Configuration parameters ... 24
6.5.1 Decode tab ... 25
6.5.2 Output tab ... 26
6.5.3 Control tab ... 28
6.5.4 Host interface tab ... 29
6.5.5 Switching input tab ... 31
6.5.6 System/scanner character tab ... 32

7 Starting up the device - Configuration ... 33
7.1 Measures to be performed prior to the initial commissioning ... 33
7.2 Starting the device ... 33
7.2.1 Power-on test ... 33
7.2.2 Interface ... 33
7.2.3 Online commands ... 33
7.2.4 Problems ... 33
7.3 Setting the configuration parameters ... 34
7.3.1 Service mode ... 34
7.3.2 Parameter sets ... 35
8 Online commands ... 36
8.1 Overview of commands and parameters ... 36
8.2 General online commands ... 37
8.3 Online commands for controlling decoding ... 39
8.4 Online commands for controlling the code reader ... 40
8.5 Online commands for the parameter set operations ... 44
9 Care, maintenance and disposal ... 48
10 Diagnostics and troubleshooting ... 49
11 Service and support ... 50
11.1 What to do should servicing be required? ... 50
12 Technical data ... 51
12.1 General specifications ... 51
12.2 Reading fields ... 53
12.3 Dimensioned drawings ... 55
13 Order guide and accessories ... 56
13.1 Type overview ... 56
13.2 Accessories ... 56
14 EC Declaration of Conformity ... 57
15 Appendix ... 58
15.1 Bar code samples ... 58

1 About this document

1.1 Used symbols and signal words

Tab. 1.1: Warning symbols and signal words

	Symbol indicating dangers to persons
	Symbol indicating dangers from harmful laser radiation
	Symbol indicating possible property damage
NOTE	Signal word for property damage Indicates dangers that may result in property damage if the measures for danger avoidance are not followed.
CAUTION	Signal word for minor injuries Indicates dangers that may result in minor injury if the measures for danger avoidance are not followed.
WARNING	Signal word for serious injury Indicates dangers that may result in severe or fatal injury if the measures for danger avoidance are not followed.

Tab. 1.2: Other symbols

	Symbol for tips Text passages with this symbol provide you with further information.
	Symbol for action steps Text passages with this symbol instruct you to perform actions.
⇨	Symbol for action results Text passages with this symbol describe the result of the preceding action.

Tab. 1.3: Terms and abbreviations

BCL	Bar code reader
DNC (Do Not Connect)	This PIN must not be connected
DTM (Device Type Manager)	Software device manager
EMC	Electromagnetic compatibility
EN	European standard
FDT (Field Device Tool)	Software frame for management of device managers (DTM)
FE	Functional earth
GUI	Graphical user interface
HID (Human Interface Device)	Device class for input devices with which users directly interact
NC (Not Connected)	This pin is not contacted at the device
SWI1	Switching input
PLC	Programmable Logic Control (corresponds to Programmable Logic Controller (PLC))

2 Safety

This bar code reader was developed, manufactured and tested in accordance with the applicable safety standards. It corresponds to the state of the art.

2.1 Intended use

The BCL 148 bar code reader is designed as a stationary compact scanner with integrated decoder for all common bar codes used for automatic object detection.

Areas of application

The bar code reader of type BCL 148 is intended especially for the following areas of application:

- Automatic analyzers
- Automation technology

CAUTION

Observe intended use!

The protection of personnel and the device cannot be guaranteed if the device is operated in a manner not complying with its intended use.

- This device is not a safety sensor and is not intended as personnel protection.
- The device may only be put into operation by competent persons.
- Only operate the device in accordance with its intended use.
- Leuze electronic GmbH + Co. KG is not liable for damages caused by improper use.
- Read these original operating instructions before commissioning the device. Knowledge of the original operating instructions is an element of proper use.

NOTICE

Comply with conditions and regulations!

- Observe the locally applicable legal regulations and the rules of the employer's liability insurance association.

2.2 Foreseeable misuse

Any use other than that defined under "Intended use" or which goes beyond that use is considered improper use.

In particular, use of the device is not permitted in the following cases:

- in rooms with explosive atmospheres
- in circuits which are relevant to safety
- for medical purposes

	NOTICE
	Do not modify or otherwise interfere with the device! ↳ Do not carry out modifications or otherwise interfere with the device. The device must not be tampered with and must not be changed in any way. ↳ The device must not be opened. There are no user-serviceable parts inside. ↳ Repairs must only be performed by Leuze electronic GmbH + Co. KG.

	NOTICE
	↳ To increase the decoding reliability, it is recommended that only the actually needed code types be enabled. ↳ If there are very high requirements on reading reliability, the use of additional processes is recommended, e.g.: ⇨ Device side: check digits, multiple evaluation by setting Equal Scans to min. ≥ 2 ⇨ Application side: reading moving codes ⇨ System side: plausibility checks of the bar code information

2.3 Competent persons

Connection, mounting, commissioning and adjustment of the device must only be carried out by competent persons.

Prerequisites for competent persons:

- They have a suitable technical education.
- They are familiar with the rules and regulations for occupational safety and safety at work.
- They are familiar with the operating instructions for the device.
- They have been instructed by the responsible person on the mounting and operation of the device.

Certified electricians

Electrical work must be carried out by a certified electrician.

Due to their technical training, knowledge and experience as well as their familiarity with relevant standards and regulations, certified electricians are able to perform work on electrical systems and independently detect possible dangers.

In Germany, certified electricians must fulfill the requirements of accident-prevention regulations DGUV (German Social Accident Insurance) provision 3 (e.g. electrician foreman). In other countries, there are respective regulations that must be observed.

2.4 Disclaimer

Leuze electronic GmbH + Co. KG is not liable in the following cases:

- The device is not being used properly.
- Reasonably foreseeable misuse is not taken into account.
- Mounting and electrical connection are not properly performed.
- Changes (e.g., constructional) are made to the device.

2.5 Laser safety notices

WARNING

LASER RADIATION – CLASS 1 LASER PRODUCT

The device satisfies the requirements of IEC/EN 60825-1:2014 safety regulations for a product of **laser class 1** and complies with 21 CFR 1040.10 except for conformance with IEC 60825-1 Ed. 3., as described in Laser Notice No. 56, dated May 8, 2019.

- Observe the applicable statutory and local laser protection regulations.
- The device must not be tampered with and must not be changed in any way.
  There are no user-serviceable parts inside the device.
- Repairs must only be performed by Leuze electronic GmbH + Co. KG.

NOTICE

Laser aperture!

The glass optics cover is the only aperture through which laser radiation may be observed on this product.

1 Laser warning sign
2 Laser aperture

Fig. 2.1: Laser aperture, laser warning sign

3 Device description

3.1 Device overview

3.1.1 The BCL 148 bar code reader

The bar code reader is a laser-based line scanner with integrated decoder and focus adjustment for all commonly used bar codes, e.g. 2/5 Interleaved, Code 39, Code 128, EAN etc.

- The many possible configurations of the device allow it to be adapted to a multitude of reading tasks.
- The focus adjustment enables reading of 1 - 15 rows of racks.
- Thanks to the high scanning rate of 750 scans per second, the bar code reader is ideally suited for instruments with manual insertion.
- Information on technical data and characteristics: see chapter 12 "Technical data".

3.1.2 Stand-alone operation

The bar code reader is operated as a "stand-alone" single device. The electrical connection of the operating voltage and of the RS 232/RS 485 interfaces is established via a 0.9 m long cable that is equipped with a 15-pin SUB-D connector plug.

3.2 Performance characteristics

- Compact scanner with lateral beam exit and integrated decoder
- High-resolution optics
- Focus adjustment
- Resolution 127 µm

  Reading of all common codes of module sizes 127 … 300 µm (5 … 12 mil) at a reading field height of ≥ 60 mm, even with a reading distance of 30 mm
- Reading distance 30 … 310 mm
- Scanning rate of 750 scans/s facilitates reliable reading, even while in motion
- Compact design for simple integration, even in constrained spaces
- Robust diecast zinc housing with 0.9 m cable and 15-pin SUB-D connection
- Process interface: RS 232 or RS 485
- Service interface: RS 232

3.3 Device construction

1 Reading window with lateral beam exit
2 M4 mounting thread, two on each of the opposing sides, 4 mm deep
3 Connection cable with 15-pin SUB-D connector plug

Fig. 3.1: Device construction of the BCL 148

3.4 Connection technology

Connection cable with 15-pin SUB-D connector plug:

- 1 switching input
- 1 pin for addressing
- Process interface: RS 232 or RS 485
- Service interface: RS 232

4 Mounting

- Observe the mounting instructions (see chapter 4.1 "Selecting a mounting location").
- Fasten the bar code reader on the M4 mounting threads on one side of the device (see chapter 3.3 "Device construction").

4.1 Selecting a mounting location

	NOTICE
	The size of the bar code module influences the maximum reading distance and the width of the reading field. ↳ When selecting a mounting location and/or the bar code label, take into account the different reading characteristics of the bar code reader with various bar code modules.

	NOTICE
	Observe when choosing the mounting location! ↳ Maintain the permissible environmental conditions (humidity, temperature). ↳ Avoid possible soiling of the reading window due to liquids, abrasion by boxes, or packaging material residues. ↳ Ensure that there is the lowest possible chance of damage to the bar code reader by mechanical collision or jammed parts. ↳ Avoid possible ambient light influence (no direct sunlight).

In order to select the right mounting location, several factors must be considered:

- Size, orientation, and position tolerance of the bar codes on the objects to be scanned.
- The reading field of the bar code reader in relation to the bar code module width.
- The resulting minimum and maximum reading distance from the respective reading field with the respective module width (see chapter 12.2 "Reading fields").
- alignment of the bar code reader for avoiding reflections.
- distance between bar code reader and host system with respect to the interface.

The best read results are obtained if the following prerequisites are fulfilled:

- The reading distance lies in the middle area of the reading field.
- There is no direct sunlight and ambient light influences are avoided
- The bar code labels are of good print quality and have good contrast ratios.
- You are not using glossy labels.
- The bar code is moved past the reading window with an angle of rotation of approx. 13°.

	NOTICE
	Avoid direct reflection of the laser beam! The beam exits the bar code reader nearly perpendicular to the reading window. ↳ The bar code label must be rotated by > 10 ° to avoid a reflection of the laser beam in the case of glossy labels.

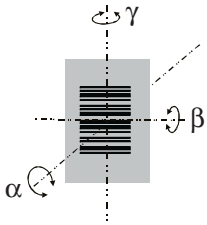

α Azimuth angle
β Angle of inclination
γ Angle of rotation
Recommended angle of rotation: γ > 10°

Fig. 4.1: Definition of the reading angles

5 Electrical connection

CAUTION

Safety notices!

- The bar code reader is completely sealed and must not be opened.
- Do not try to open the device under any circumstances, as this avoids both degree of protection IP 65 and the warranty.
- Do not try to open the device under any circumstances, as this avoids both degree of protection IP 54 and the warranty.
- Before connecting the device, be sure that the supply voltage agrees with the value printed on the name plate.
- Connection of the device and maintenance work while under voltage must only be carried out by a qualified electrician.
- The power supply unit for the generation of the supply voltage for the bar code reader and the corresponding connection units must have a secure electrical insulation according to IEC 60742 (PELV).
- If faults cannot be rectified, take the device out of operation and protect it from accidentally being started.

CAUTION

UL applications!

For UL applications, use is only permitted in Class 2 circuits in accordance with the NEC (National Electric Code).

NOTICE

Laying cables!

- Lay all connection cables and signal lines within the electrical installation space or permanently in cable ducts.
- Lay the cables and lines so that they are protected against external damages.
- For further information: see ISO 13849-2, Table D.4.

The electrical connection is established via the connection cable with 15-pin SUB-D connector plug (see chapter 5.3 "Pin assignment").

The bar code reader is equipped with the following ports and interfaces:

- 1 switching input
- 1 pin for addressing
- Process interface: RS 232 or RS 485
- Service interface: RS 232

You can configure the functions of the switching input and the addressing according to your requirements via the *Sensor Studio* configuration software (see chapter 6 "Configuration and diagnostics software - Sensor Studio").

5.1 Operating voltage

The bar code reader is designed for an operating voltage of 18 … 30 V. The operating voltage is fed in via pin 8 and pin 15 of the 15-pin SUB-D connector plug (see chapter 5.3 "Pin assignment").

5.2 Housing ground

To avoid electromagnetic interference, a low-impedance connection is necessary from the housing to the machine ground.

5.3 Pin assignment

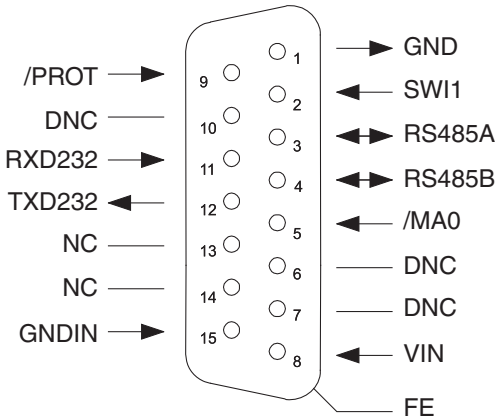

Fig. 5.1: Pin assignment

NOTICE

The functional earth (FE) is connected to the metal flange of the SUB-D connector plug.

Pin	Signal	Description	
1	GND	0 V DC Reference ground bridged with pin 15	for IN/OUT
2	SWI1	Switching input	IN
3	RS485A	A signal line of the RS 485 interface	IN/OUT
4	RS485B	B signal line of the RS 485 interface	IN/OUT
5	/MA0	Address for selecting the device in Host mode	IN
6	DNC	Do not connect - for internal use only	
7	DNC	Do not connect - for internal use only	
8	VIN	Operating voltage +18 … 30 V DC	IN
9	/PROT	Protocol changeover	IN
10	DNC	Do not connect - for internal use only	
11	RXD232	RxD signal line of the RS 232 interface	IN
12	TXD232	TxD signal line of the RS 232 interface	OUT
13	NC	Not connected	---
14	NC	Not connected	---
15	GNDIN	0 V DC Reference ground	IN

5.4 Switching input/addressing/protocol changeover

The bar code reader is equipped with a switching input (**SWI1**), a pin for addressing (**/MA0**) (see chapter 5.3 "Pin assignment") and a pin for protocol changeover (**/PROT**) (see chapter 5.4.3 "Protocol changeover").

- The switching input can be used to trigger the reading.
- You can make the address setting via the pin for addressing if two bar code readers are operated on one interface.
  - **/MA0** not active: device address=0
  - **/MA0** active: device address=1

  If pin **/MA0** is inactive on device startup, the device uses the device address from the parameter set (default device address=0).
- You can make a hardware-controlled switch to Service mode via the pin for protocol changeover.

You can configure the functions of the switching input according to your requirements via the *Sensor Studio* configuration software (see chapter 6 "Configuration and diagnostics software - Sensor Studio").

5.4.1 Switching input

Via switching input connection SWI1, you can trigger a read process in the standard setting (high = active).

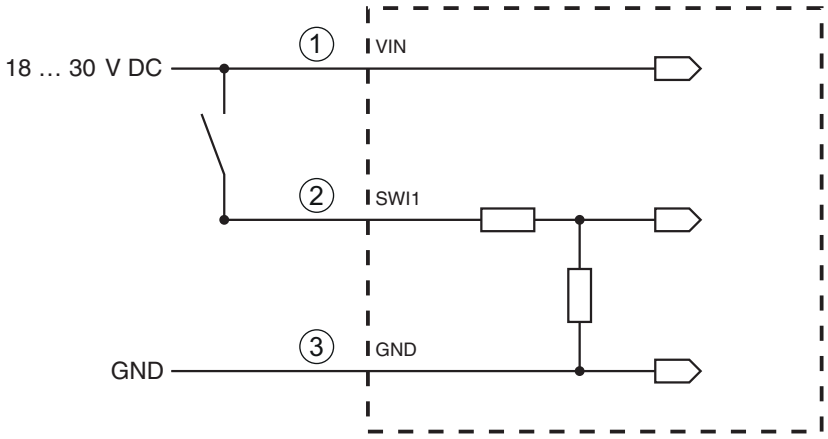

1 Operating voltage UB 18 … 30 V DC
2 SWI1
3 GND
Input resistance: approx. 6 kΩ

Fig. 5.2: Switching input (standard setting)

5.4.2 Addressing

The cable for addressing (pin **/MA0**) is only used during device startup. If multiple devices are operated on an RS 485 interface, the device address of the bar code reader is defined via pin **/MA0**. Bit flags 0 and 1 are set for the device address.

- **/MA0** not active: device address=0

  (Level on **/MA0** = high or not assigned)
- **/MA0** active: device address=1

  (Level on **/MA0** = low or GND)

If pin **/MA0** is inactive on device startup, the device uses the device address from the parameter set (default device address=0).

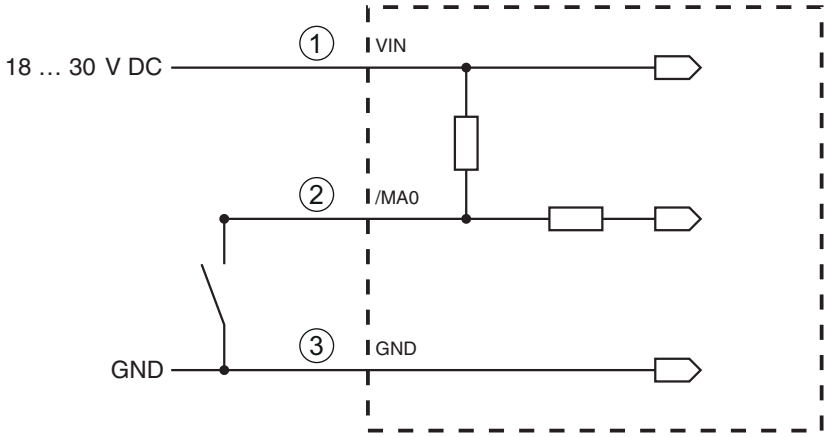

1 Operating voltage UB 18 … 30 V DC
2 /MA0
3 GND

Fig. 5.3: Circuit diagram example: addressing

5.4.3 Protocol changeover

Via the input for protocol changeover (**/PROT**), it is alternatively possible to make a hardware-controlled switch to the Service mode protocol.

- **/PROT** inactive: Host mode protocol
  (Level on **/PROT=** high or not assigned)
- **/PROT** active: Service mode protocol
  (Level on **/PROT=** low or GND)

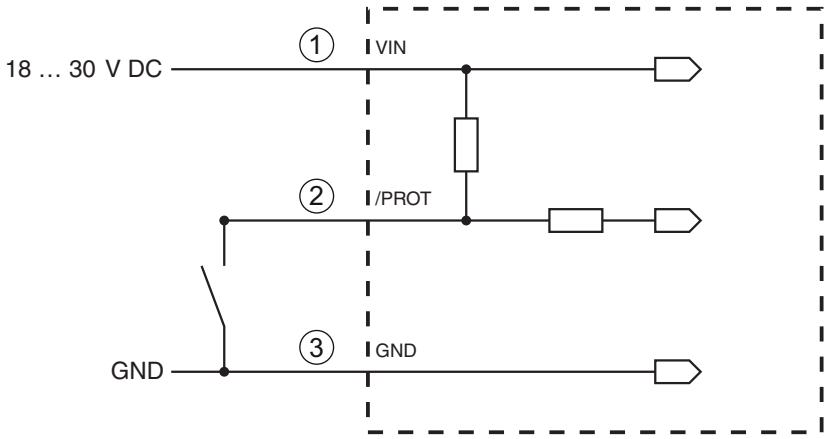

1 Operating voltage UB 18 … 30 V DC
2 /PROT
3 GND

Fig. 5.4: Circuit diagram example: protocol changeover

5.5 PC or terminal connection

Via the RS 232 service interface, you can configure the bar code reader by means of a PC or a terminal program. For this, you need an RS 232 connection that establishes the RxD, TxD and GND connections between PC and bar code reader (see chapter 5.3 "Pin assignment").

6 Configuration and diagnostics software - Sensor Studio

The *Sensor Studio* configuration software provides a graphical user interface for the operation, configuration and diagnostics of the device via the RS 232 service interface.

A device that is not connected to the PC can be configured offline.

Configurations can be saved and reopened as projects for transferring back to the device at a later time.

	NOTICE
	Only use the *Sensor Studio* configuration software for products manufactured by Leuze electronic. The *Sensor Studio* configuration software is offered in the following languages: German, English, French, Italian and Spanish. The FDT frame application of the *Sensor Studio* supports all languages; all languages may not be supported in the device DTM (Device Type Manager).

The *Sensor Studio* configuration software is designed according to the FDT/DTM concept:

- You make the individual configuration settings for the bar code reader in the Device Type Manager (DTM).
- The individual DTM configurations of a project can be called up via the frame application of the Field Device Tool (FDT).
- Communication DTM for bar code readers: *LeCommInterface*
- Device DTM for the BCL 148 bar code reader

Procedure for the installation of the software and hardware:

- Install the *Sensor Studio* configuration software on the PC.
- Install the communication and device DTM. Communication and device DTM are included in the *LeAnalysisCollectionSetup* installation package.
- Create device DTM for BCL 148 in the project tree of the *Sensor Studio* FDT frame.
- Connect bar code reader to PC (see chapter 5.5 "PC or terminal connection").
- Activate service interface on bar code reader (see chapter 7.3.1 "Service mode").

6.1 System requirements

To use the *Sensor Studio* configuration software, you need a PC or laptop with the following specifications:

Tab. 6.1: System requirements for *Sensor Studio* installation

Operating system	Windows XP or higher (32 bit, 64 bit) Windows Vista Windows 7 Windows 8
Computer	Processor type: 1 GHz or higher Serial COM interface CD-ROM drive Main memory (RAM): at least 64 MB Keyboard and mouse or touchpad
Graphics card	At least 1024 x 768 pixels
Required hard disk capacity for *Sensor Studio* and communication DTM	35 MB

NOTICE

Administrator privileges on the PC are necessary for installing *Sensor Studio*.

6.2 Installing Sensor Studio

NOTICE

The installation files of the *Sensor Studio* configuration software must be downloaded from the Internet at **www.leuze.com.** For subsequent updates, you can find the most recent version of the *Sensor Studio* installation software on the Internet at **www.leuze.com**.

6.2.1 Downloading configuration software

- Call up the Leuze home page: **www.leuze.com**
- Enter the type designation or part number of the device as the search term.
- The configuration software can be found on the product page for the device under the *Downloads* tab.

6.2.2 Installing the Sensor Studio FDT frame

NOTICE	
	First install the software! ↳ Do not yet connect the device to the PC. ↳ First install the software.

NOTICE	
	If FDT frame software is already installed on your PC, you do not need the *Sensor Studio* installation. You can install the communication DTM and the device DTM in the existing FDT frame. Communication DTM and device DTM are included in the *LeAnalysisCollectionSetup* installation package.

↳ Start the PC.

↳ Download the configuration software from the Internet to the PC (see chapter 6.2.1 "Downloading configuration software"). Unpack the installation package.

↳ Start the *SensorStudioSetup.exe* file.

↳ Follow the instructions on the screen.

6.2.3 Install the communication DTM and device DTM

Prerequisites:

✓ An FDT frame is installed on the PC.

↳ Start the *LeAnalysisCollection.exe* file from the installation package and follow the instructions on the screen.

6.2.4 Connecting device to PC

The device is connected to the PC via the RS 232 interface.

You need an RS 232 connection that establishes the RxD, TxD and GND connections between PC and device (see chapter 5.5 "PC or terminal connection").

6.3 Starting Sensor Studio

Prerequisites:

✓ The device has been mounted (see chapter 4 "Mounting") and connected (see chapter 5 "Electrical connection") correctly.

✓ The device is connected to the PC via the RS 232 interface (see chapter 6.2.4 "Connecting device to PC").

✓ The Sensor Studio configuration software is installed on the PC (see chapter 6.2 "Installing Sensor Studio").

↳ Start the *Sensor Studio* configuration software by double-clicking the [*Sensor Studio*] icon ( ).

⇨ The **mode selection** of the Project Wizard is displayed.

↳ Select the **Device selection without communication connection (offline)** configuration mode and click on [Next].

⇨ The Project Wizard displays the device selection list of the configurable devices.

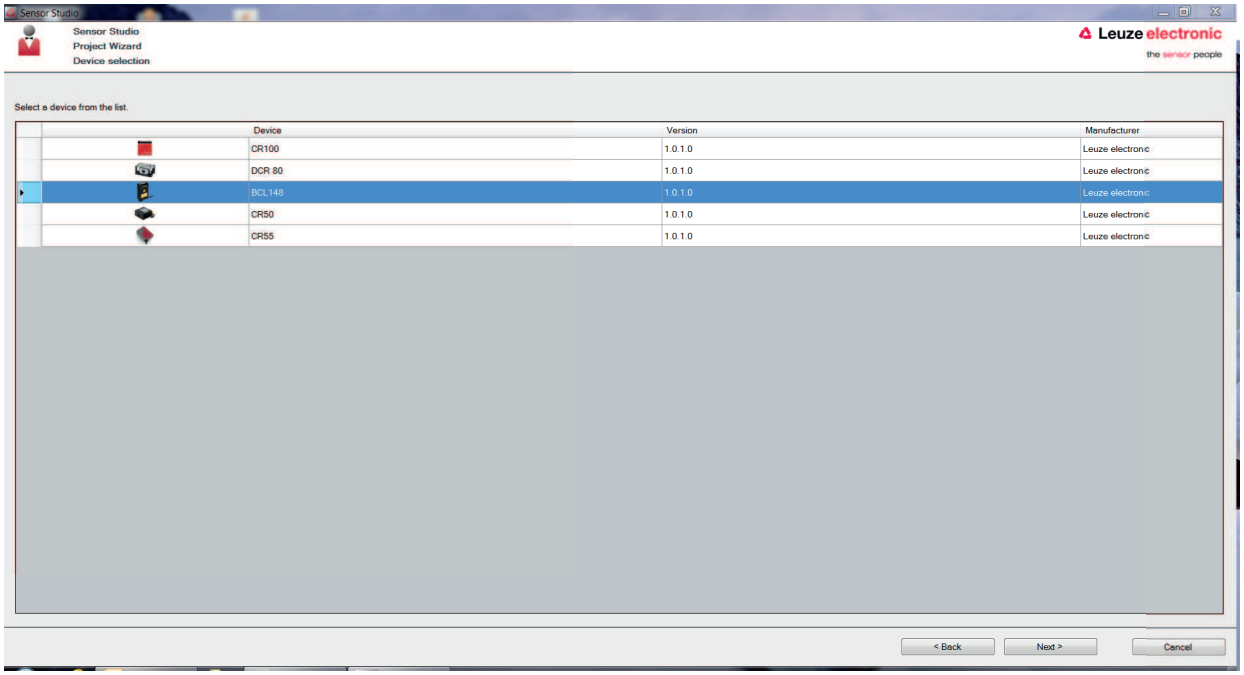

Fig. 6.1: Device selection for the BCL 148

↳ Select **BCL 148** in the **device selection** and click on [Next].

⇨ The device manager (DTM) of the connected bar code reader starts with the offline view for the *Sensor Studio* configuration project.

↳ Establish the online connection to the connected bar code reader.

  ⇨ In the *Sensor Studio* FDT frame, click on the [Establish connection with device] button ( ).

  ⇨ In the *Sensor Studio* FDT frame, click on the [Upload parameters to device] button ( ).

⇨ The current configuration data is displayed in the device manager (DTM).

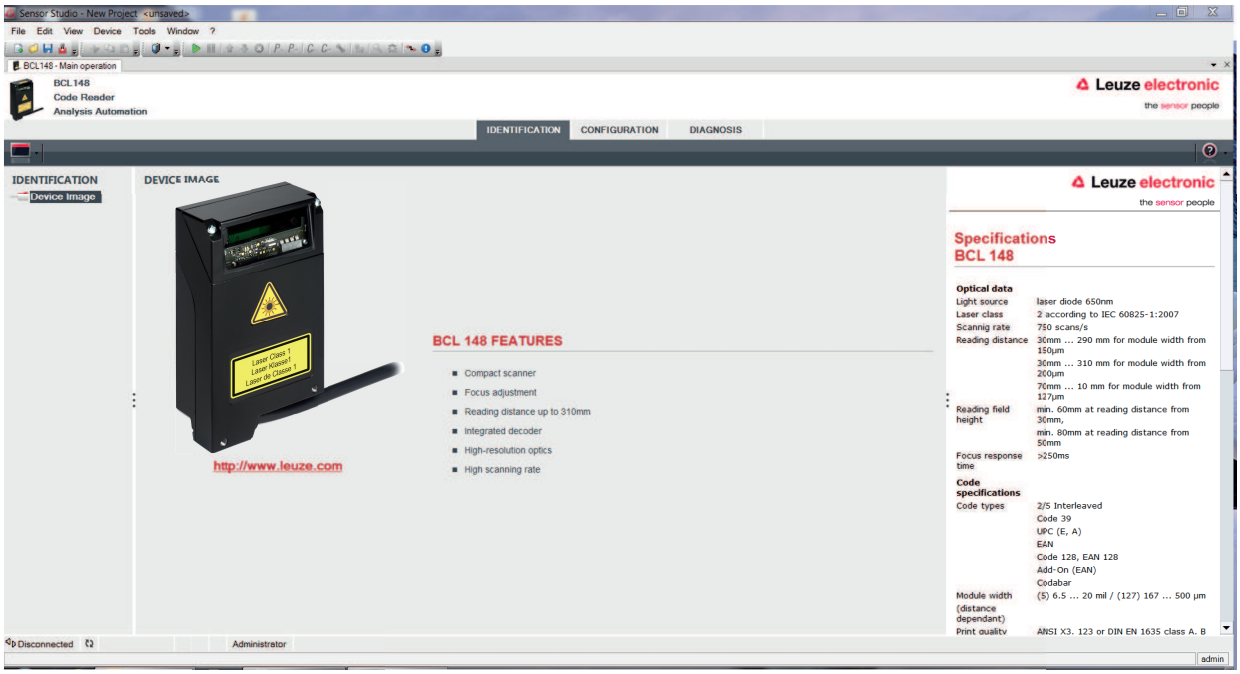

Fig. 6.2: Configuration project: device manager for BCL 148

- The menus of the *Sensor Studio* device manager (DTM) can be used to change or read out the configuration of the connected device.
  - ⇨ The user interface of the *Sensor Studio* device manager (DTM) is largely self-explanatory.
  - ⇨ The online help system provides information on the menu items and adjustment parameters. Select the **Help** menu item in the menu [?].
- Transfer the modified configuration parameters to the device.
  - ⇨ If a connection exists, click on the [Download parameters to device] ( ) button on the task bar.

6.4 Exiting Sensor Studio

After completing the configuration settings, close the *Sensor Studio* configuration software.

- Exit the program via **File > Exit**.
- Save the configuration settings as a configuration project on the PC.

6.5 Configuration parameters

In this chapter, you will find information and explanations on the configuration parameters of the device manager (DTM) for the bar code reader.

	NOTICE
	This chapter does not include a complete description of the *Sensor Studio* configuration software. Complete information on the FDT frame menu and on the functions in the device manager (DTM) can be found in the online help system.

The device manager (DTM) for BCL 148 bar code readers of the *Sensor Studio* configuration software offers the following configuration functions:

- Decode (see chapter 6.5.1 "Decode tab")
- Output (see chapter 6.5.2 "Output tab")
- Control (see chapter 6.5.3 "Control tab")
- Host Interface (see chapter 6.5.4 "Host interface tab")
- Switching input (sensor) (see chapter 6.5.5 "Switching input tab")
- System/scanner character (system properties) (see chapter 6.5.6 "System/scanner character tab")

	NOTICE
	The online help system displays information on the menu items and configuration parameters for each function. Select the **Help** menu item in the menu [?]

The *Sensor Studio* configuration software offers the following buttons in the **CONFIGURATION** menu:

- : [Export Parameter Command File …]

  Saves the currently set parameter data as text file in a selectable directory.
- : [Reset all parameters in the GUI to their factory default settings]

  Resets all parameters in the graphical user interface to the factory settings.

6.5.1 Decode tab

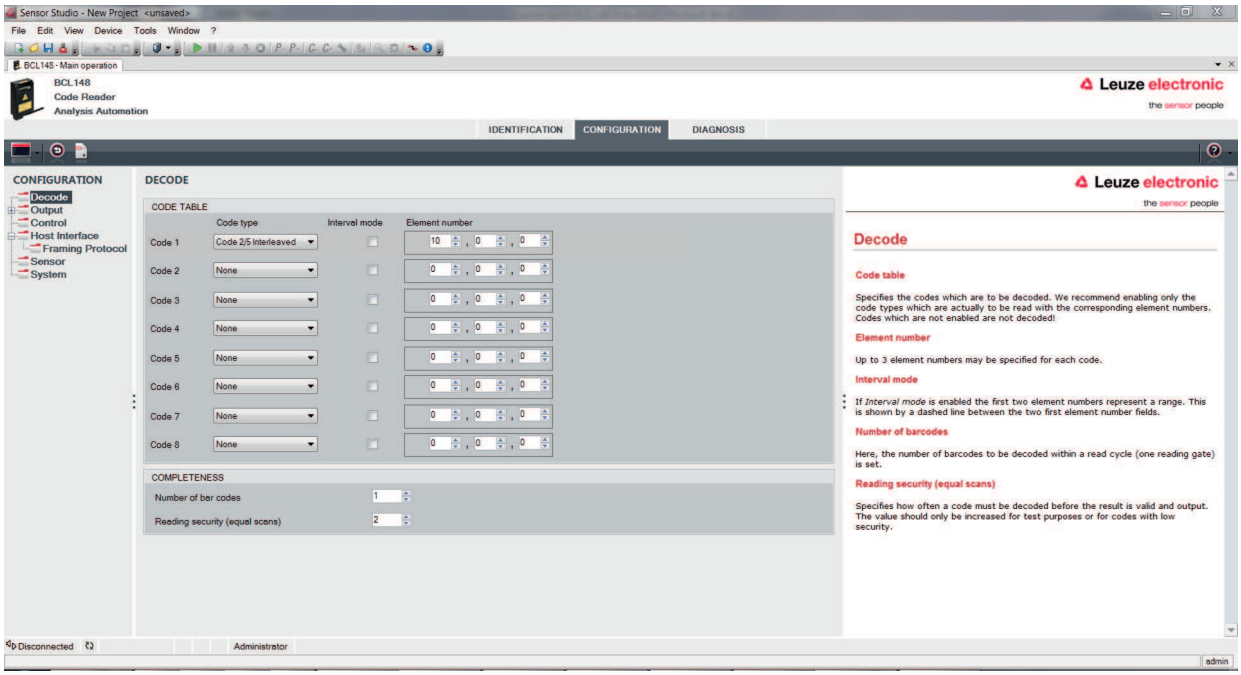

Fig. 6.3: Decode tab

Code table (CODE TABLE)	Here, the codes which are to be decoded are set. **We recommend enabling only the code types which are to actually be read with the corresponding element numbers**. Codes which are not enabled are not decoded!
Element number	In the field Element number, up to 3 element entries may be entered. A range of permissible elements is indicated by a dash: e.g., 4-40 elements. To select a range, set the check mark beneath Interval mode. Up to 3 fixed element numbers with comma: e.g.: 8,13 elements Both are also possible, but the range must be specified first (select Interval mode): e.g.: 4-10,20 elements
Labels to be decoded Reading security (equal scans) (COMPLETENESS)	Here, the number of the bar codes to be decoded within a read cycle (one reading gate) is set. Under reading reliability (Equal Scans), it is possible to select how often a code must be decoded before the result is valid and output.

6.5.2 Output tab

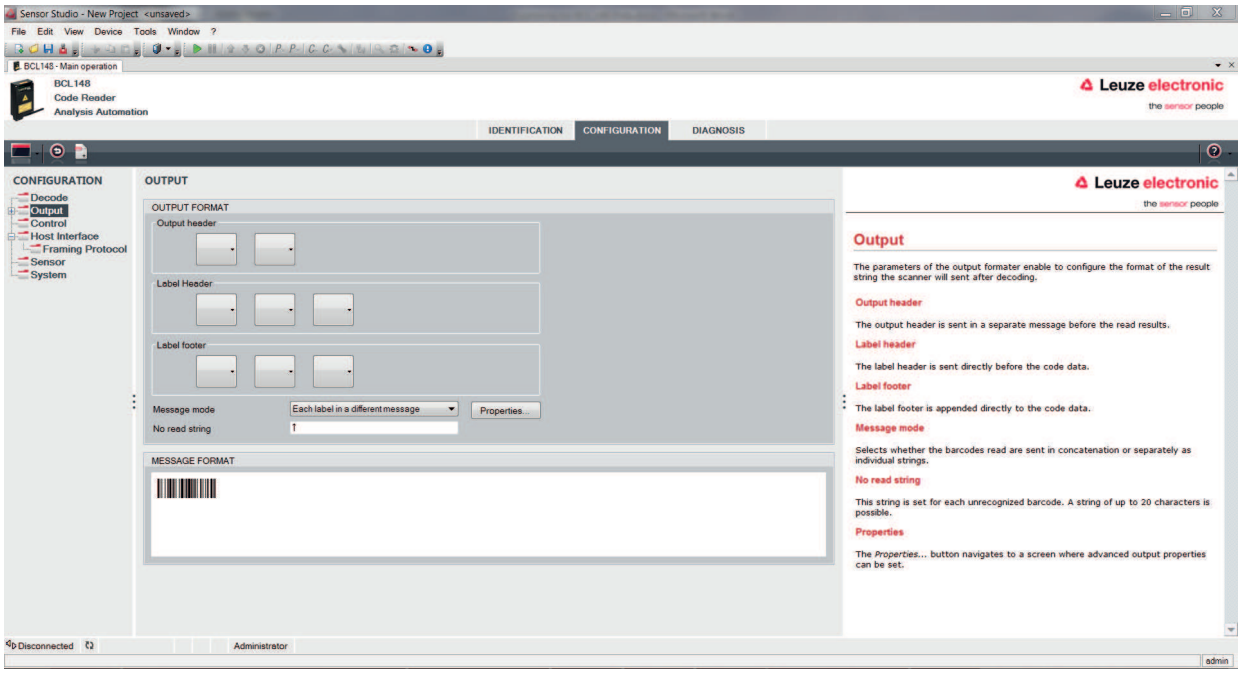

Fig. 6.4: Output tab

Output header	Select from the options listed below. The output header is sent in a separate message before the read result.
Label header	The label header is set directly before the code data.
Label footer	The label footer is appended directly to the code data.
Message mode	Selects whether the bar codes read are sent in concatenation or separately as individual strings.

	NOTICE
	The structure of this message string is depicted symbolically in the preview window.

Text in the case of misreading (No read string)	This character is set for each unrecognized bar code. Multiple characters (=string) may be entered here. Up to 20 characters are possible.
Properties (Output Properties)	Set the desired formatting modes and formatting characters as necessary.

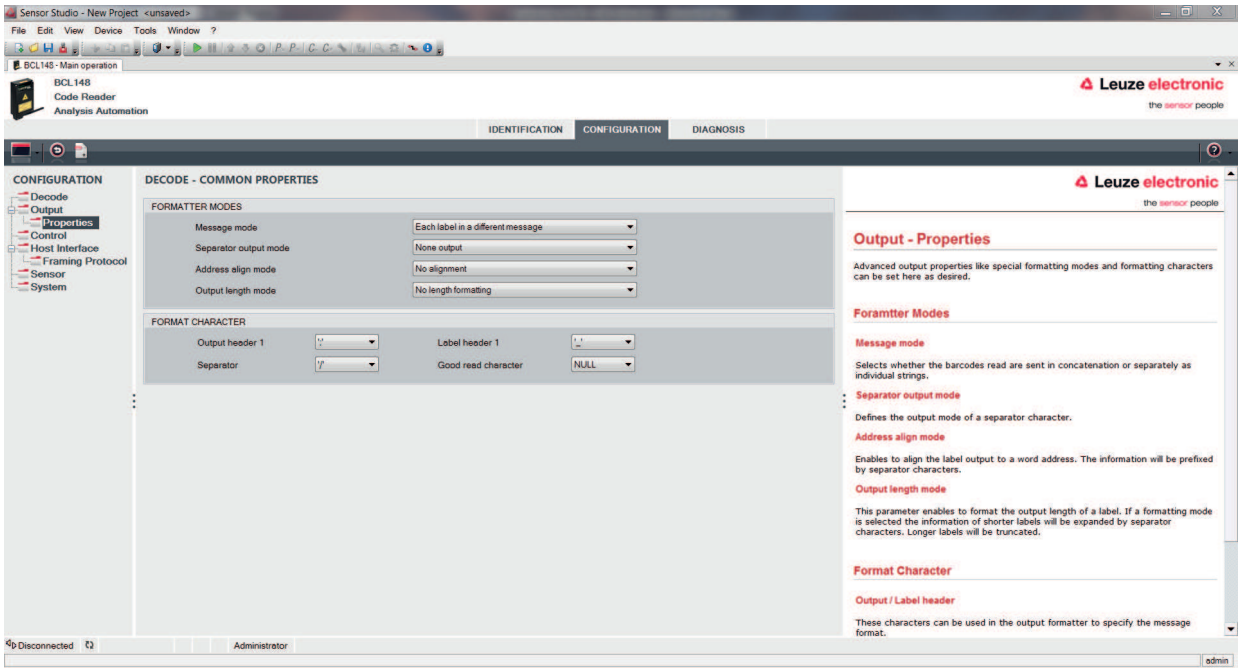

Fig. 6.5: Standard settings for the **Properties** window – *Output* tab

6.5.3 Control tab

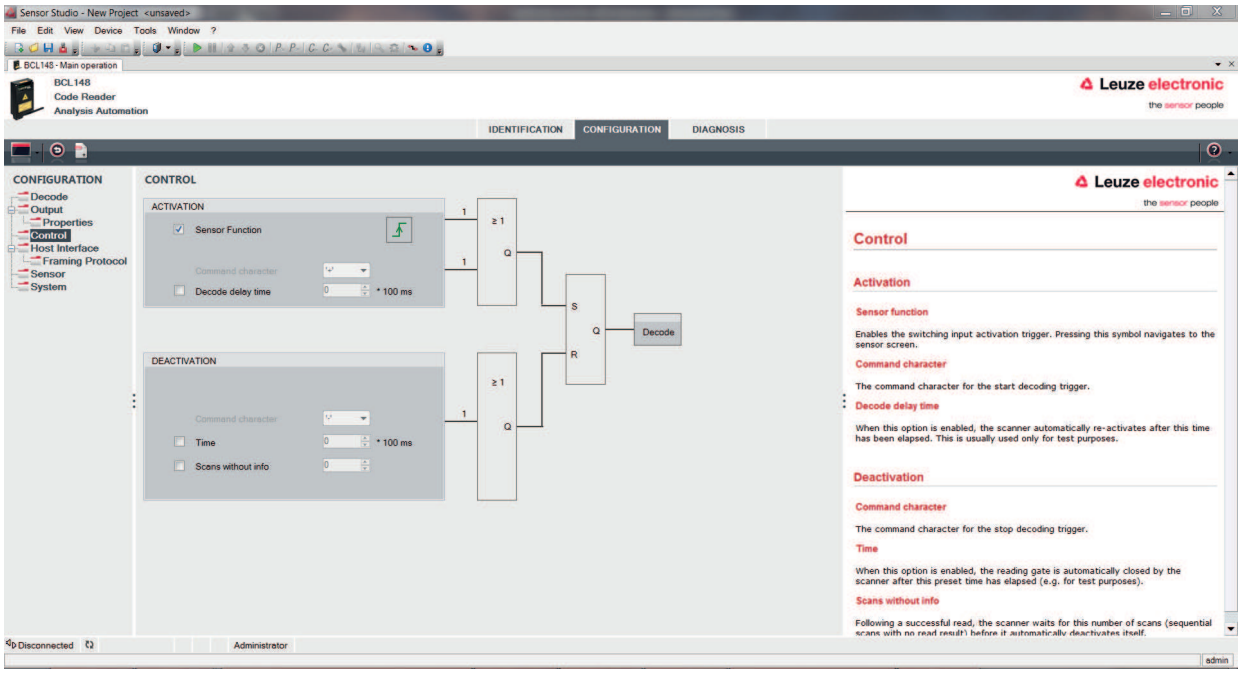

Fig. 6.6: Control tab

Activation

Switching input 1 Function	See menu switching input
Sensor function	The function of the switching input as trigger input is activated or deactivated.
Command character	The standard online character for the trigger start is the ´+´ character. The character cannot be changed.
Delay until scanner reads (Decode delay time)	Time delay after the trigger signal by the switching input until the actual code reading is triggered.

Deactivation

Switching input 1 Function	See menu switching input
Command character	The standard online character for the trigger end is the ´-´ character. The character cannot be changed.
Time	If the code reader is activated, the reading gate is automatically closed by the code reader after this preset time has elapsed (e.g. for test purposes).
Scans without info	Following a successful read, the code reader waits for this number of scans (sequential scans with no read result) before it automatically deactivates itself.

6.5.4 Host interface tab

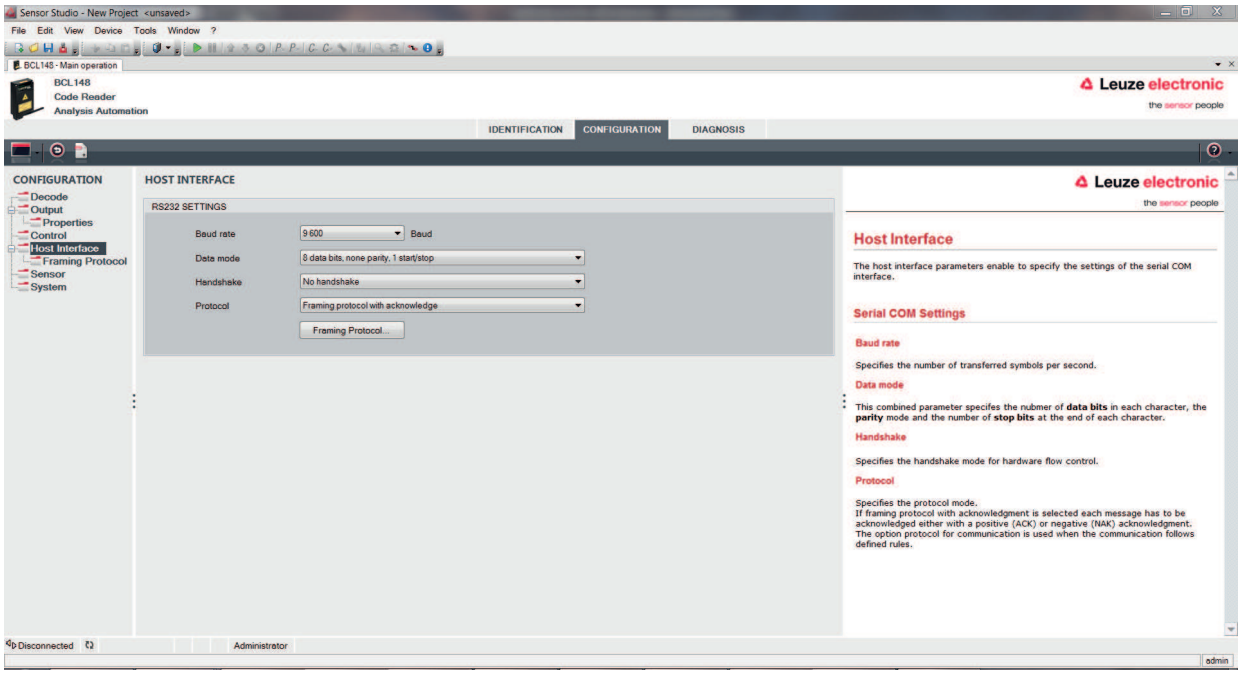

Fig. 6.7: Host interface tab

Select the desired baud rate, the stop bits, the data bits, the parity and various transmission modes here. The parameters are not active until these settings have been transferred to the code reader (standard procedure).

The desired acknowledgment settings are also to be set in this selection window.

Properties dialog box (Framing Protocol)

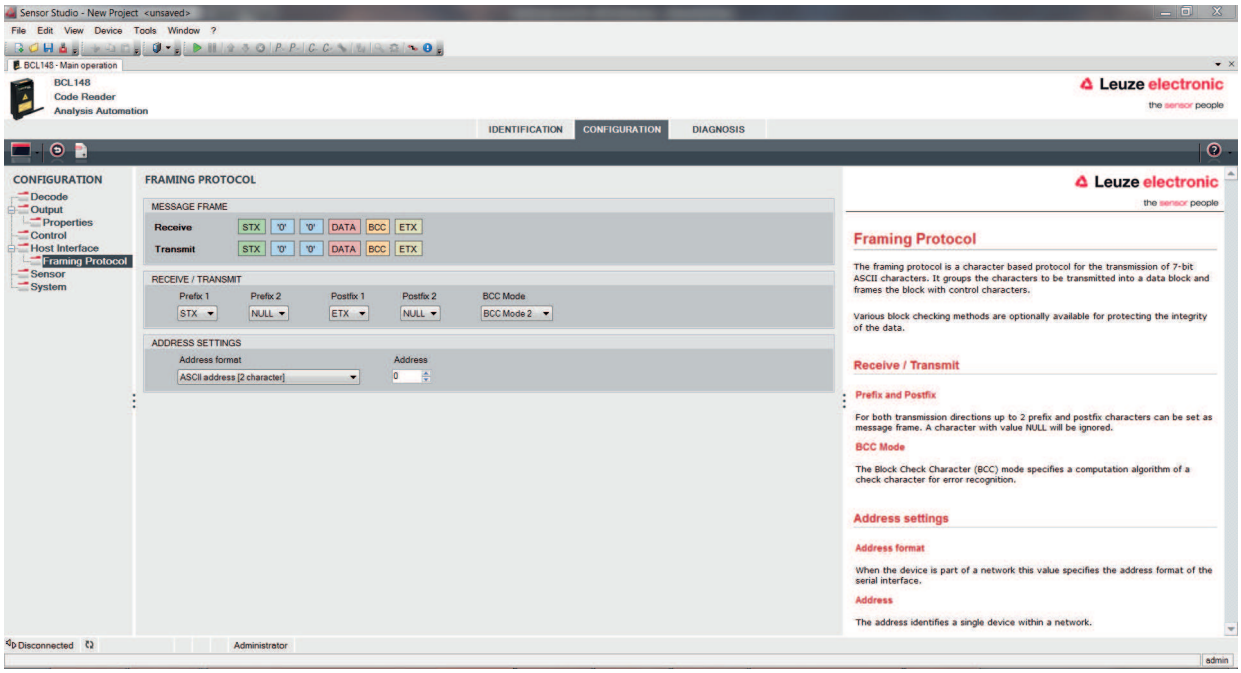

Fig. 6.8: Standard settings of the Properties dialog box (Framing Protocol)

Here, you can change the address settings and the protocol for sending and receiving.

	NOTICE
	To be able to continue to communicate with a device following a parameter transfer, you may need to make appropriate adjustments to the communication properties of the device in the *Sensor Studio* configuration software.

6.5.5 Switching input tab

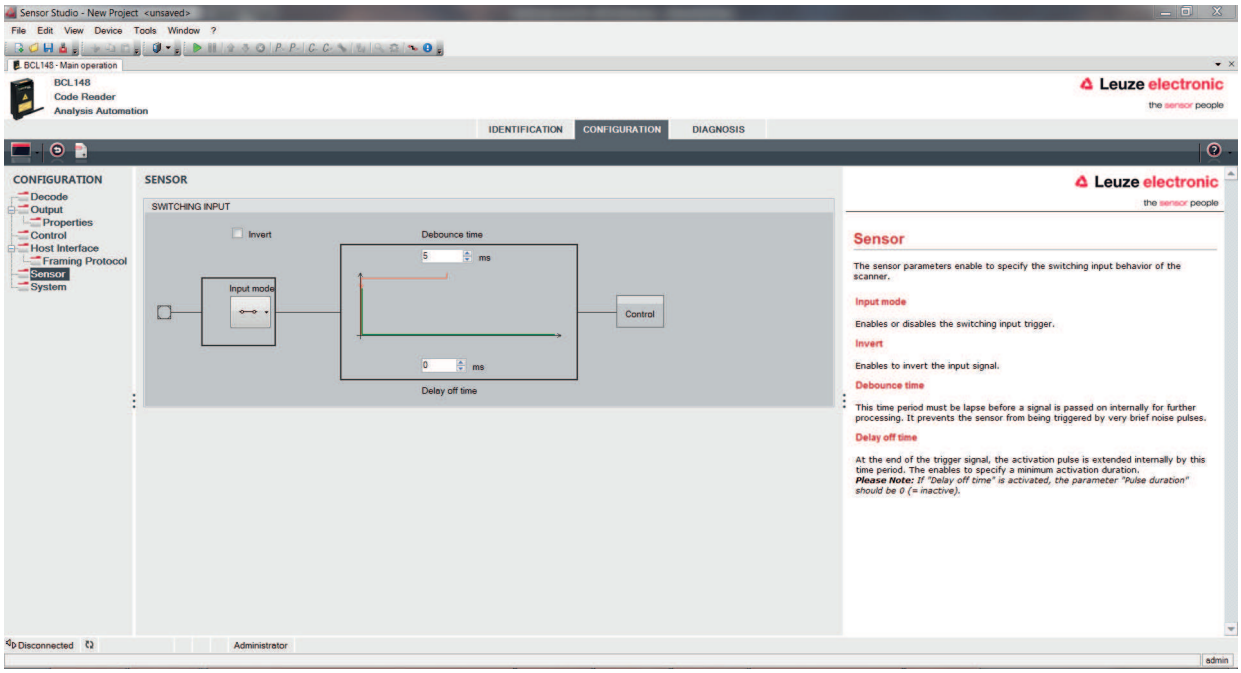

Fig. 6.9: Switching input tab

Inverted	Here, the input level can be inverted
Debounce time	This time period must lapse until the trigger signal is regarded as valid.
Switch-off delay (Delay off time)	After the end of the trigger signal, the pulse is extended internally by this time period.
Function (Control)	Event that is started when the switching input is activated.

6.5.6 System/scanner character tab

With the system parameters, you can define the general behavior of the code reader.

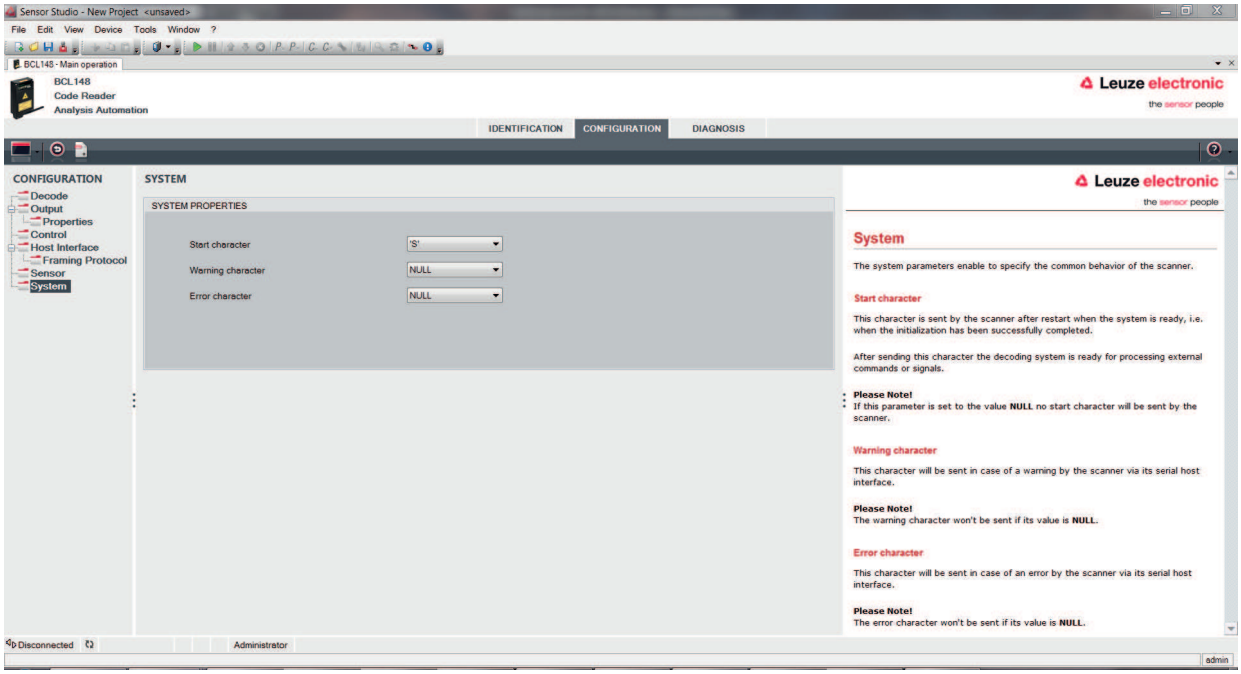

Fig. 6.10: SYSTEM PROPERTIES / scanner character

Start character	Start character The code reader sends the start character if the system is ready; i.e., once initialization has been successfully completed. Default start character: ‘S’ After the code reader has sent the start character, the decoder system can process external commands or signals. **Note**: If this parameter is set to value *zero*, the code reader does not send a start character.
Warning character	Warning character To output a warning, the code reader sends the warning character via the serial host interface. **Note**: If this parameter is set to the value *zero*, the start character does not send a warning character.
Error character	Error character In the event of an error, the code reader sends the error character via the serial host interface. **Note**: If this parameter is set to the value *zero*, the code reader does not send an error character.

	NOTICE
	After the code reader is configured via the *Sensor Studio* configuration software, you can generate and save a file with the parameter data, e.g., to configure further code readers (see chapter 8.5 "Online commands for the parameter set operations").

7 Starting up the device - Configuration

7.1 Measures to be performed prior to the initial commissioning

	NOTICE
!	↳ Observe the notices for device arrangement (see chapter 4.1 "Selecting a mounting location")**)**. ↳ If possible, always trigger the bar code reader with the aid of commands or an external transducer (photoelectric sensor). ⇨ Only then can you be certain whether a code has been read (code contents are transmitted) or not (the **NoRead** character is transmitted at the end of the reading gate). ↳ Before commissioning, familiarize yourself with the operation and configuration of the device. ↳ Before connecting the operating voltage, recheck all connections and ensure that they have been properly made.

7.2 Starting the device

7.2.1 Power-on test

After connecting the operating voltage, the bar code reader performs an automatic "Power On" function test.

After the switch-on phase, the bar code reader responds with the start message via the interface.

- The start message is preset to ‘S’.
- If the start message has been transferred, the bar code reader is ready.

7.2.2 Interface

Proper function of the interface can most easily be tested in service operation using the RS 232 interface with the *Sensor Studio* configuration software.

7.2.3 Online commands

Using the online commands, important device functions can be checked, e.g. reading activation (see chapter 8 "Online commands").

You can use online commands to directly send control and configuration commands to the device.

You can send online commands with a terminal program or with the *Sensor Studio* configuration software (see chapter 6 "Configuration and diagnostics software - Sensor Studio").

7.2.4 Problems

For information on how to proceed in the event of problems during commissioning of the devices, see chapter 10 "Diagnostics and troubleshooting".

If a problem occurs that cannot be rectified even after checking all electrical connections and settings on the devices and on the host, contact your responsible Leuze electronic subsidiary or Leuze electronic customer service (see chapter 11 "Service and support").

7.3 Setting the configuration parameters

You commissioned the device. Usually, you will have to configure it before you can use it. With the configuration possibilities offered by the *Sensor Studio* configuration software or the device DTM, you can individually adapt the device to your specific application. For instructions regarding the various setting options, refer to the online help or to the see chapter 6.5 "Configuration parameters".

- To operate the bar code reader, it is normally sufficient to set code type and code length in accordance with the bar codes that are to be read.
- Depending on the application, you can configure the switching input according to your requirements.

Configuration settings

The configuration settings are stored in the memory of the bar code reader in parameter sets. The various parameter sets are explained to understand what is happening during configuration parameter setting (see chapter 7.3.2 "Parameter sets").

- The setting of code type and code length is usually accomplished by using the *Sensor Studio* configuration software (see chapter 6 "Configuration and diagnostics software - Sensor Studio").
- You can set other configuration parameters as follows:
  - Via the *Sensor Studio* configuration software with the buttons located under **CONFIGURATION**.
  - Via the internal setup of the bar code reader (start with the online command **CS**; see chapter 7.3.2 "Parameter sets")
  - Via online commands (see chapter 8.5 "Online commands for the parameter set operations").

7.3.1 Service mode

You can connect a PC or a terminal to the device via the RS 232 interface and configure the device through this connection (see chapter 5.5 "PC or terminal connection").

	NOTICE
	↳ To enter Service mode, you must connect pin 9 (**/PROT**) on the connector plug to GND. ⇨ You can then access the device under permanently defined interface settings.

Setting the required parameters is carried out easiest in the 'Service' operating mode.

The Service mode provides the following defined operating parameters on the RS 232 interface, no matter how the device is configured for process mode:

- Transmission rate: 9600 baud
- No parity
- 8 data bits
- 1 stop bit
- Prefix: STX
- Postfix: CR, LF

	NOTICE
	The bar code reader has various command sets! The command set of the bar code reader in Service mode differs in some respects from the bar code reader in Host mode.

7.3.2 Parameter sets

The configuration settings are stored in the memory of the bar code reader in parameter sets.

- Factory default parameter set
- Current parameter set

Factory default parameter set

This parameter set contains the factory-set default settings for all parameters of the bar code reader. It is permanently stored in the FLASH ROM of the bar code reader.

The parameter set with the default settings is loaded into the memory of the bar code reader:

- Prior to delivery
- With the *Sensor Studio* configuration software via the [Factory Default] button in the **DIAGNOSTICS** menu.
- After the online command **PC20** (see chapter 8.5 "Online commands for the parameter set operations")

Current parameter set

In this parameter set, the current settings for all device parameters are stored. When the bar code reader is in operation, the parameter set is stored in the EEPROM of the bar code reader.

8 Online commands

You can use online commands to directly send control and configuration commands to the device. To do this, connect the bar code reader to a computer (host) (see chapter 5.5 "PC or terminal connection").

	NOTICE
	You can send online commands with a terminal program or with the *Sensor Studio* configuration software (see chapter 6 "Configuration and diagnostics software - Sensor Studio").

Information about the transmission protocol: see chapter 6.5.4 "Host interface tab".

Using the online commands you can:

- control/decode the reading gate.
- read/write/copy parameters.
- call up status information.
- carry out a software reset in order to reinitialize the device.

	NOTICE
	For diagnostics, you can send online commands to the device via the *Sensor Studio* configuration software (**DIAGNOSIS > Terminal**).

8.1 Overview of commands and parameters

	NOTICE
	The following chapters describe the input of online commands via a terminal program. To input online commands via the *Sensor Studio* configuration software see chapter 6 "Configuration and diagnostics software - Sensor Studio"

Syntax

Online commands consist of one or two ASCII characters followed by command parameters.

No separation characters may be entered between the command and the command parameter(s). Both small and capitalized letters can be used.

Example:

Command:	<ESC> ‘f+‘ ‘<aaa>’
<ESC>:	ESC character; hex 0x1B
f+:	Command, start focusing/decoding
<aaa>:	Parameter, focus position in mm

Notation

Commands, parameters and returned data are enclosed between single quotation marks ’ ’ in the text of this manual.

	NOTICE
	Most online commands are acknowledged by the device and any requested data returned. For commands that are not acknowledged, command execution can be observed or monitored directly on the device.

8.2 General online commands

Software version number

Command	’V’
Description	Requests device version information
Parameter	None
Acknowledgment	Example: ’BCL 148 V 60.18 17.11.2014’ The first line contains the device type of the bar code reader, followed by the device version number and version date. The data which is actually displayed may vary from the values given here.
Operating mode	Service mode, Host mode

NOTICE

You can use this command to check whether the communication between PC and bar code reader is functional. If you do not receive an acknowledgment, please check the interface connections or the protocol.

Software reset

Command	’H’
Description	Carries out a software reset. The device is restarted and reinitialized, leaving it in the same state as when the supply voltage is switched on.
Parameter	None
Acknowledgment	’S’ (start signal)
Operating mode	Service mode, Host mode

Device status

Command	’Z’
Description	The command queries the device status.

Answer	<a><b><c><d><e>’		
	<a>	General status	
		’0’	No error
		’1’	Read result exists
		’2’	Output buffer not available
		’3’	Focus command has wrong length
		’4’	Impermissible reading distance
		’5’	Invalid data format for the reading distance
		’6’	Device temperature too high
		’7’	Motor speed too high
	<b>	Device status	
		’0’	Scanner OFF
		’1’	Scanner ON
		’2‘	Scan active
	<c>	Motor status	
		’0’	Motor OFF
		’1’	Motor is switched on and accelerating, but not yet ready
		’2‘	Motor maintaining nominal rotational speed
	<d>	Laser status	
		’0’	Laser OFF
		’1’	Laser ON (laser starting up)
		’2‘	Laser ON (laser at rated power)
	<e>	Status of focusing	
		’0’	Lens at reference position
		’1’	Lens moves from the reference position to the desired position
		’2‘	Lens at the desired position
Operating mode	Service mode, Host mode		

Start setup program

Command	’E’
Description	The command starts the internal setup program of the device. In the menu for the internal setup program, you can change certain defined configuration parameters of the current parameter set.
Operating mode	Service mode, Host mode

Navigate in the setup program

- [E] button: start setup program
- [ESC] button: back one menu item
- [X] button: exit menu

  Dialog: with or without saving
- [Enter] button: if you have entered a parameter, you must conclude the entry by – depending on the terminal program – pressing the [Enter] button once or twice.

8.3 Online commands for controlling decoding

Start focusing/decoding

Command	<ESC>‘f+‘ ‘<aaa>‘	
Description	The command starts decoding. The laser switches on, the motor runs at the correct speed, etc.	
	<ESC>	ESC (cancel) character; hex 0x1B
	‘<aaa>‘	Focus position in mm
Answer	‘>’ on successful start, otherwise none	
Operating mode	Service mode	

Stop focusing/decoding

Command	<ESC>‘f-‘	
Description	The command stops decoding. The laser switches off and the lens returns to the reference position.	
	<ESC>	ESC (cancel) character; hex 0x1B
Answer	None	
Operating mode	Service mode	

8.4 Online commands for controlling the code reader

To activate the scanner in Host mode, you must enter the online commands in a certain sequence – and with a certain device status – as shown in the following image.

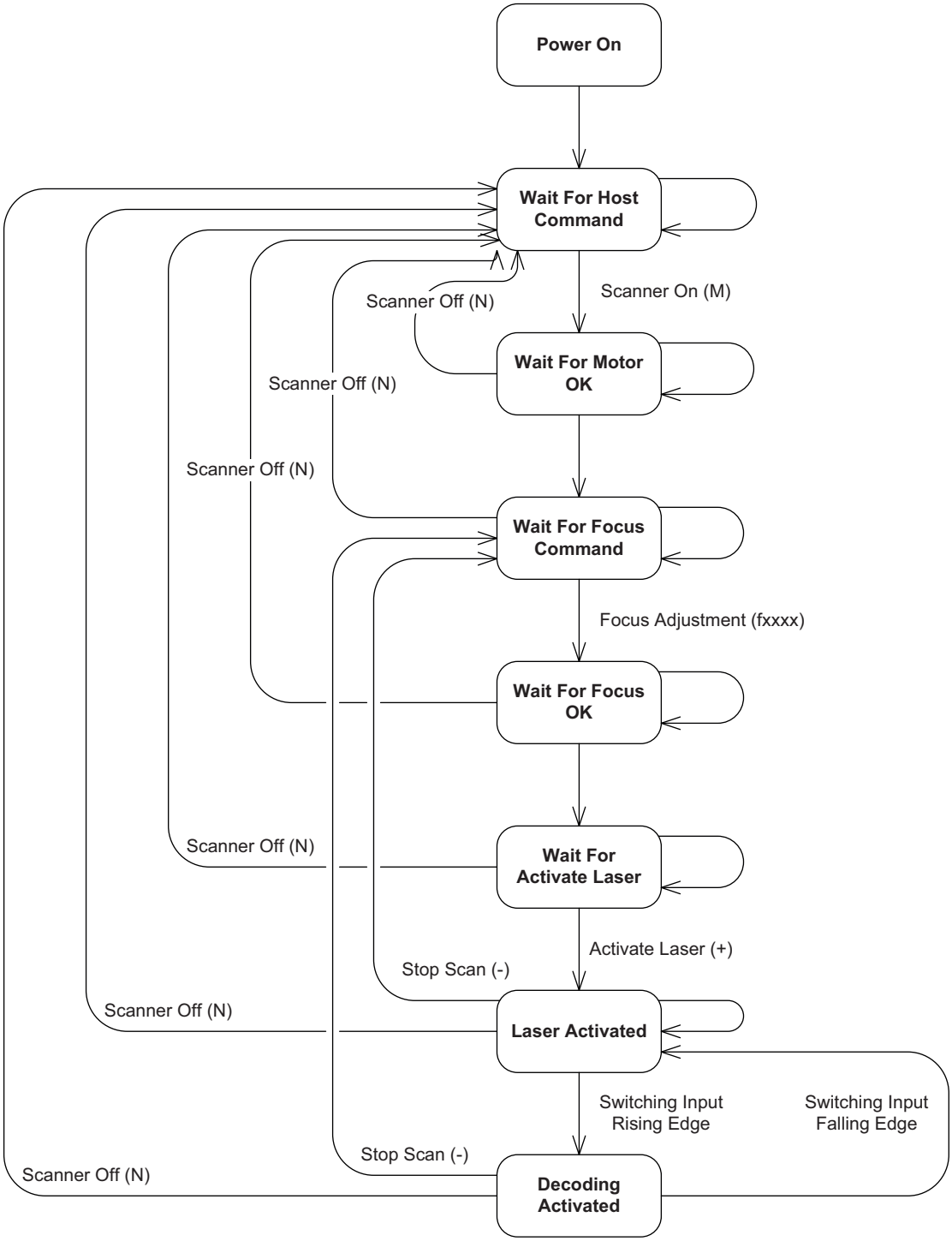

Scanner Code reader

Fig. 8.1: Flow chart: software command status

NOTICE

Do not use <CR> and <LF> characters in the framing protocol when in host mode!

In host mode, <CR> and <LF> characters must not be used in the framing protocol in order for a read result to be output after a read result request via the 'L' command.

↳ If you work in Host mode, set your terminal program so that, if necessary, <CR> and <LF> characters are **not** used. Use, e.g., <STX>*message*<ETX>.

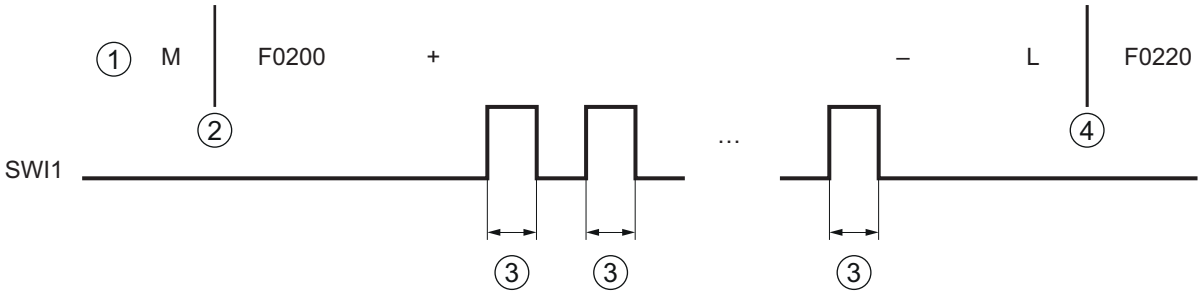

1	Commands
2	Focus adjustment: 200 mm
3	Read
4	New focus adjustment: 220 mm

Fig. 8.2: Flow chart: code reader in Host mode

NOTICE

The processing status of the ‘M’, ‘F’, ‘+’ and ‘-’ commands can be monitored with the ‘Z’ command (status query).

Start code reader

Command	’M’
Answer	None
Operating mode	Host mode

Stop code reader

Command	’N’
Answer	None
Operating mode	Host mode

NOTICE

↳ Refer to the flow chart for the correct sequence of command input.

Focusing the code reader

Command	’f“’<aaaa>’	
Description	Command adjusts the focus position..	
	‘<aaaa>‘	Focus position in mm Example for a focus distance of 200 mm: ‘f0200‘
Answer	None	

Start sensor (start reading)

Command	’+’
Parameter	None
Answer	None
Operating mode	Host mode

NOTICE

- Refer to the flow chart for the correct sequence of command input.
- To start a reading, the switching input must be set after the ‘+’ command.

Stop sensor (end reading)

Command	’-’
Parameter	None
Answer	None
Operating mode	Host mode

NOTICE

- Refer to the flow chart for the correct sequence of command input.
- Before the ‘-’ command, the switching input must be reset.

Request read result

Command	’L’		
Description	The command requests the output of the read result.		
	<ESC>	ESC (cancel) character; hex 0x1B	
	‘<aaa>‘	Focus position in mm	
Answer	String (without carriage return): ‘<n_index><status><CR><LF>’ ‘01<timer_l1><timer_h1><ncode_1><cl11><barcode 11><mr11> <cl12>…<CR> <LF>’ ‘02<timer_l1><timer_h1><ncode_1><cl11><barcode 11><mr11><cl12>… <CR> <LF>…’ ‘<n_index><timer_ln><timer_hn><ncode_n><cln1><barcode n1><mrn1><cln2>… <CR> <LF>‘ If multiple codes are detected in a reading gate, the decoded content is displayed in the same line.		
	‘<n_index>‘	Number of reading gates (00 … 99)	
	‘<status>‘	Status code	
		‘0‘	Read results exist
		‘1‘	No read results exist
		‘2‘	Scan active
		‘3‘	Overflow of the communication buffer
		‘4‘	Overflow of the decoder buffer
	‘<timer_li>‘	Time frame before the read impulse (duration of the index marking; (0000 … 9999)	
	‘<timer_hi>‘	Time frame of the read impulse (0000 … 9999)	
	‘<ncode_i>‘	Number of codes per read impulse (0 … 9) 1: Without error	
	‘<clix>‘	Length of the xth code in the ith read impulse (00 … 99)	
	‘<barcode ix>‘	Content of the bar code (ASCII character)	
	‘<MRix>‘	Number of identical readings of the code (00 … 99)	
	‘<CR>‘	ASCII code for carriage return; hex 0x0D	
	‘<LF>‘	ASCII code for line feed; hex 0x0A	
Operating mode	Host mode		

NOTICE

The result string contains <CR> and <LF> characters

- <CR> and <LF> characters may **not** be used in the framing protocol. Use, e.g., <STX>*message*<ETX>.
- If you work in Host mode, set your terminal program so that, if necessary, <CR> and <LF> characters are **not** used.

8.5 Online commands for the parameter set operations

Transferring parameters to parameter set

Command	’PT <a><b><c><ddd><ee_0>…<ee_n><f>’		
Description	The command transmits parameter data beginning with the start address.		
Parameter	‘<a>‘	BCC mode for sending the data to the code reader	
		’0’	No BCC
		’3’	BCC mode
	‘<b>‘	Memory location for the parameter set	
		’0’	Save parameter set in EEPROM
		’3’	Save parameter set in RAM
	‘<c>‘	Additional messages	
		’0’	No additional messages – write immediately
		’3’	Additional messages follow
	‘<ddd>‘	Offset for the start of transfer; decimal number Value range: 000 … 510	
	‘<ee_n>‘	The nth byte (in hex format) that is written in the parameter set, counting from the start of the transfer (<ddd>)	
	‘<f>‘	Block check test (ASCII), optional.	
Answer	’PS<aa>’		
	‘<aa>‘	Status	
		’00’	Transfer successful
		’01’	Invalid message
		’02’	Invalid message length
		’03’	Invalid BCC type
		’04’	Invalid BCC
		’05’	Invalid data length
		’06’	Invalid message data
		’07’	Invalid start address
		’08’	Invalid parameter set
		’09’	Invalid parameter type
Operating mode	Service mode, Host mode		

Requesting parameter data from parameter set

Command	’PR <a><b><ccc>ddd>’		
Description	The command requests parameter data from a parameter set.		
Parameter	‘<a>‘	BCC mode for sending the data to the host	
		’0’	No BCC
		’3’	BCC mode
	‘<b>‘	Parameter set for reading	
		’0’	Parameter set in EEPROM
		’3’	Parameter set in RAM
	‘<ccc>‘	Offset for the start of reading; decimal number Value range: 000 … 510	
	<ddd>	Number of answer bytes	
Answer	‘PT<a><b>0<ccc><dd_0><dd_1>…<dd_n><e>’		
	‘<dd_n>‘	The nth byte (in hex format) of the parameter set, counting from the <start address>.	
	‘<e>‘	Block check test (ASCII) for <BCC type> ‘3’	
	’PS<aa>’		
	‘<aa>‘	Status	
		’01’	Invalid message
		’02’	Invalid message length
		’03’	Invalid BCC type
		’05’	Invalid data length
		’07’	Invalid start address
		’08’	Invalid parameter set
		’09’	Invalid parameter type
	None, if no intermediate buffer is available for the parameter set.		
Operating mode	Service mode, Host mode		

Copying parameter set

Command	’PC‘ ‘<a>‘ ‘b>‘	
Description	The command copies complete parameter sets. **Note: Only command ‘PC20’ is valid. This command copies the parameter set with the factory settings to the current parameter set.**	
Parameter	‘<a>‘	Output parameter set
	‘<b>‘	Target parameter set
Answer	None, if the command was successfully executed (code reader restarts).	
	’PS‘ ‘<aa>‘	
	‘<aa>‘	Status
	’02’	Invalid message length
	’08’	Invalid parameter set
	’09’	Invalid parameter type
Operating mode	Service mode, Host mode	

Analyzing parameter set

Command	’PA‘ ‘<a>>‘		
Description	The command analyzes the checksum calculation for the selected parameter set.		
Parameter	‘<a>‘	Parameter set for analyzing the checksum calculation	
		0	Parameter set that is stored in the EEPROM
		1	Customer-specific parameter set
		2	Parameter set with factory settings
		3	Parameter set currently stored in RAM
Answer	’PS‘ ‘<aa>‘		
	‘<aa>‘	Status	
		’00	Transfer successful
		’02’	Invalid message length
		’08’	Invalid parameter set (checksum)
		’09’	Invalid parameter type
Operating mode	Service mode, Host mode		

NOTICE

The *Sensor Studio* configuration software offers an [Export Parameter Command File…] button ( ) in the **CONFIGURATION** menu via which the currently set parameter data is written to a text file in such a way that it can again be directly copied from the text file back into the code reader.

Application example: Within the scope of series production, copy a parameter set to many code readers.

NOTICE

On request, Leuze electronic will be happy to provide you with additional information on the topic of online commands. Please contact Leuze electronic customer service (see chapter 11 "Service and support").

Application example

Within the scope of series production, copy a parameter set to other code readers.

After the code reader is configured via the *Sensor Studio* configuration software, you can use the [ ] button to generate a file with the parameter data and save it in the desired directory.

Example configuration:

- File name: **BCL148_ParameterCMD.txt**
- File type: **txt files (*.txt)**

File **BCL148_ParameterCMD.txt** contains the following data string:

```
PT301000010a000002422000084220000b422000000000000000000000000000000000000102000
002000003000000180000000000000000000000000000000000000000000100070000000000000000
00000000002000c081c08005000000000000030000"
PT3010960607050001000302020000030000c8002a1100000000d-
c00260240000a000500060704000100010002000000d0a00c8001027000000000000000000000000000
0000000001000003b485f4c2f00530000002b2d2c2e3f00000000000000000000000W
PT301192000000000000000000000000000000000000000000000000000000000000000000000000000
000000000000000000000000000000000000000000000000000000000000500000000000500000000
000000000102000100900 12c010100010090012c01.
PT301288000000000000000000000000000000000000000000000000000000000000000000000000000
000000000320000002100000000000001002a000000000000000000000000000000000000000000000
00000000000000000000000000000000000000000000\
PT300480000000000000000000000000000000000000000000000000000000000000000000e8bdP
H
```

To load this configuration data string for use in multiple code readers (e.g., series production), this data must be loaded in the code readers as individual PT sequences (PT = **P**arameter **T**ransmit).

- Command from the control to the code reader:

```
PT301000010a000002422000084220000b422000000000000000000000000000000000000102000
002000003000000180000000000000000000000000000000000000000000100070000000000000000
00000000002000c081c08005000000000000030000"
```

Answer from the code reader:

```
PS0
```

- Command from the control to the code reader:

```
PT3010960607050001000302020000030000c8002a1100000000d-
c00260240000a000500060704000100010002000000d0a00c800102700000000000000000000000000
00000000001000003b485f4c2f00530000002b2d2c2e3f00000000000000000000000W
```

Answer from the code reader:

```
PS0
```

- Command from the control to the code reader:

```
PT301192000000000000000000000000000000000000000000000000000000000000000000000000
00000000000000000000000000000000000000000000000000000000000500000000000500000000
00000000010200010090012c010100010090012c01.
```

Answer from the code reader:

```
PS0
```

- Command from the control to the code reader:

```
PT301288000000000000000000000000000000000000000000000000000000000000000008000000000
00000000032000000210000000000001002a000000000000000000000000000000000000000000000
000000000000000000000000000000000000000000000\\
```

Answer from the code reader:

```
PS0
```

- Command from the control to the code reader:

```
PT3013842d2e20242f2b250000000000000000000000000000000000000000000000000001000110
10000000000004000000000000000000000000000000000000000000000000000000000000000000000
000000000000000000000000000000000000000000+
```

Answer from the code reader:

```
PS0
```

- Command from the control to the code reader:

```
PT300480000000000000000000000000000000000000000000000000000000000000000e8bdP
```

Answer from the code reader:

```
PS0
```

- Command from the control to the code reader:

```
'H'
```

Answer from the code reader:

```
'S'
```

The parameter set is thereby loaded in the code reader and ready.

9 Care, maintenance and disposal

Cleaning

Clean the glass window of the bar code reader with a soft, lint-free cloth before mounting if necessary.

Maintenance

Usually, the bar code reader does not require any maintenance by the operator.

Repairs to the device must only be carried out by the manufacturer.

- For repairs, contact your responsible Leuze electronic subsidiary or Leuze electronic customer service (see chapter 11 "Service and support").

Disposing

- For disposal observe the applicable national regulations regarding electronic components.

10 Diagnostics and troubleshooting

Status messages from the device can be transferred via the interface.

Troubleshooting

Please contact your responsible Leuze electronic subsidiary or Leuze electronic customer service if you cannot rectify faults and errors with the configuration software (see chapter 11 "Service and support").

Tab. 10.1: Errors, causes of errors and measures

Error	Possible error cause	Measures
No communication possible	Incorrect wiring.	Check wiring.
	Wrong interface selected.	Select the correct interface via the *Sensor Studio* configuration software.
	Different protocol settings.	Check protocol settings in the device and in the *Sensor Studio* configuration software or switch device to the *Service* operating mode.
No code reading possible	Code reading not possible (quality).	Improve code quality! Entire code in laser line?
	Code is not enabled.	Check entries in the code table (type and length).
	Excessive reflections.	Increase angle of rotation of the laser beam to > 10° with respect to vertical.

ПРОМЭЛЕКТРОНИКА / sales@prom-elec.com

11 Service and support

24-hour on-call service at:

+49 7021 573-0

Service hotline:

+49 7021 573-123

Monday to Friday 8.00 a.m. to 5.00 p.m. (UTC+1)

E-mail:

service.identify@leuze.de

Repair service and returns:

Procedure and Internet form can be found at

www.leuze.com/repair

Return address for repairs:

Service center

Leuze electronic GmbH + Co. KG

In der Braike 1

D-73277 Owen / Germany

11.1 What to do should servicing be required?

NOTICE

Please use this chapter as a master copy should servicing be required!

- Enter the contact information and fax this form together with your service order to the fax number given below.

Customer data (please complete)

Device type:	
Serial number:	
Firmware:	
Error description:	
Company:	
Contact person/department:	
Phone (direct dial):	
Fax:	
Street/No:	
ZIP code/City:	
Country:	

Leuze Service fax number:

+49 7021 573-199

12 Technical data

12.1 General specifications

Tab. 12.1: Optics

Light source	Laser diode
Wavelength	650 nm (visible red light)
Beam exit	Lateral
Impulse duration	110 µs
Max. output power (peak)	1.3 mW
Laser class	1 acc. to IEC/EN 60825-1:2014 and 21 CFR 1040.10 with Laser Notice No. 56
Scanning rate	750 scans/s
Focus setting time	<250 ms
Reading distance / reading field width	see chapter 12.2 "Reading fields"
Reading field	30 mm … 290 mm for module width up to 200 µm 30 mm … 310 mm for module width from 200 µm 70 mm … 110 mm for module width of 127 µm
Reading field height	Min. 60 mm at reading distance from 30 mm Min. 80 mm at reading distance from 50 mm
Software features	Selectable output format, multiple read, real time decoding, control of the switching input

Tab. 12.2: Code specifications

Code types	2/5 Interleaved, Code 39 (number of digits 2 … 63), 2/5 IATA, 2/5 Industrial, UPC (A/E) Code 128, EAN 128 (number of digits 2 … 63), Pharmacode, Add-On (EAN), Codabar
Module width (distance dependent)	5 mil, 6.5 … 20 mil 127 µm, 167 … 500 µm
Print quality	ANSI X3, 123 DIN EN 1635 class A, B
Angle of rotation	> 10°

Tab. 12.3: Interfaces

Process interface	RS 232 or RS 485
Baud rate	110 … 57600 baud
Data formats	Data bits: 7, 8, 9 Parity: none, even, odd Stop bit: 1, 2
Service interface	RS 232 with fixed data format 8 data bits, no parity, 1 stop bit <STX> <data> <CR><LF>
Protocols	application specific
Ports	1 switching input (SWI1) 1 addressing input (/MA0) 1 changeover input for Service mode protocol / Host mode protocol (/PROT)

Tab. 12.4: Electrical equipment

Operating voltage	+18 … 30 V DC, protection class III - PELV (Protective Extra Low Voltage) **Note:** For UL applications: use is permitted exclusively in Class 2 circuits according to NEC
Power consumption	Max. 9 W
Switching input	+18 … 30 V DC depending on operating voltage, $I_{max.}$= 8 mA

Tab. 12.5: Mechanical data

Degree of protection	IP 65
Connection type	Connection cable, 0.9 m long with 15-pin SUB-D connector plug
Weight	615 g
Dimensions (H x W x D)	119 x 71 x 38 mm
Fastening	4 M4 mounting threads, 4 mm deep
Housing	Diecast zinc
Optics cover	Glass

Tab. 12.6: Environmental data

Ambient temperature (operation)	+5 °C … +40 °C
Air humidity	10 % … 85 % rel. humidity, non-condensing
Electromagnetic compatibility	EN 61326-1:2013-01 FCC15 - CFR 47 Part 15 (July 18, 2014)
Certifications	UL 60950-1 For UL applications: use is permitted exclusively in Class 2 circuits according to NEC CSA C22.2 No. 60950-1-07
Conformity	CE, FCC

12.2 Reading fields

NOTICE	
	Please note that the actual reading fields are also influenced by factors such as labeling material, printing quality, scanning angle, printing contrast etc., and may thus deviate from the reading fields specified here. The origin of the read distance always refers to the front edge of the housing of the beam exit.

Reading curve for module m=127 µm

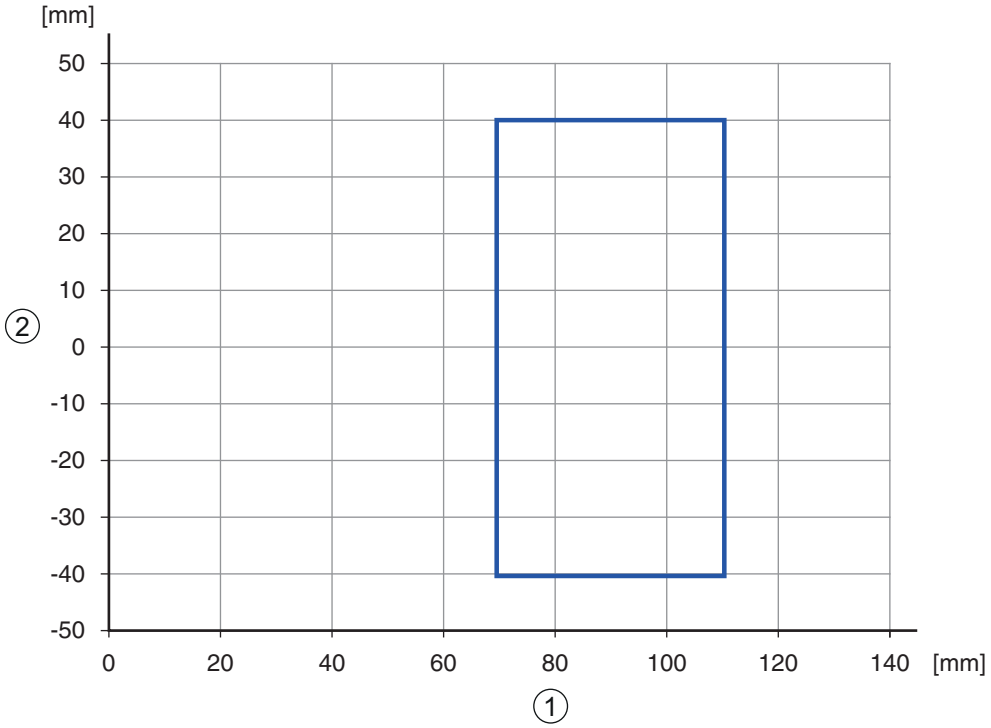

1 Reading distance [mm]
2 Reading field width [mm]

Fig. 12.1: Reading curve for module m=127 µm

Reading curve for module m=167 … 200 µm

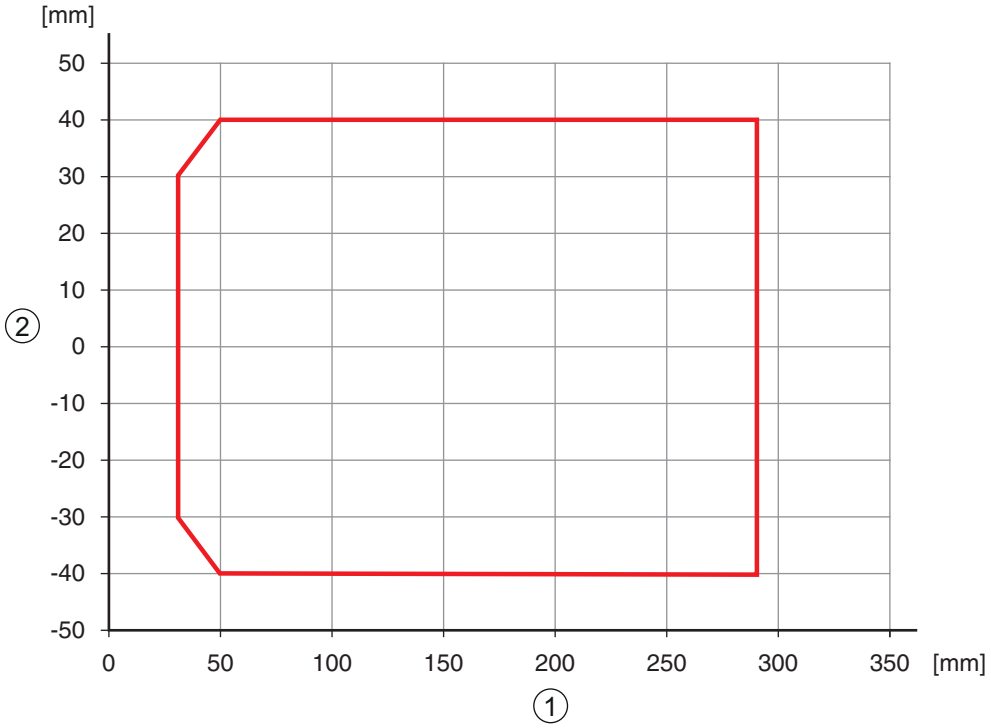

1 Reading distance [mm]
2 Reading field width [mm]

Fig. 12.2: Reading curve for module m=167 … 200 µm

Reading curve for module m=200 … 300 µm

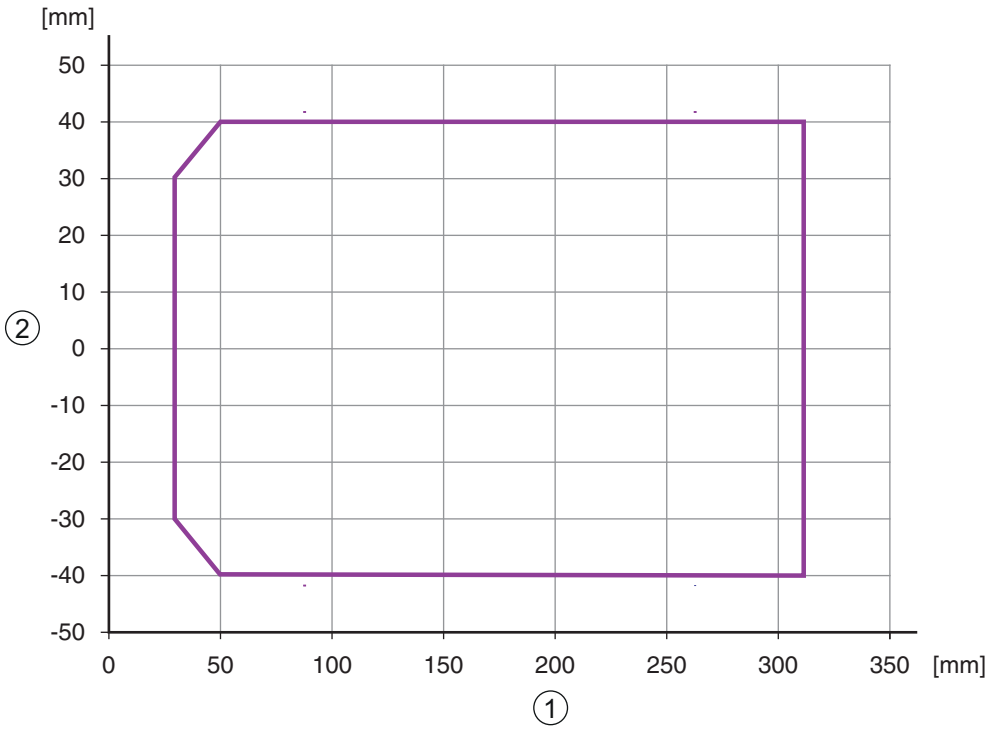

1 Reading distance [mm]
2 Reading field width [mm]

Fig. 12.3: Reading curve for module m=200 … 300 µm

12.3 Dimensioned drawings

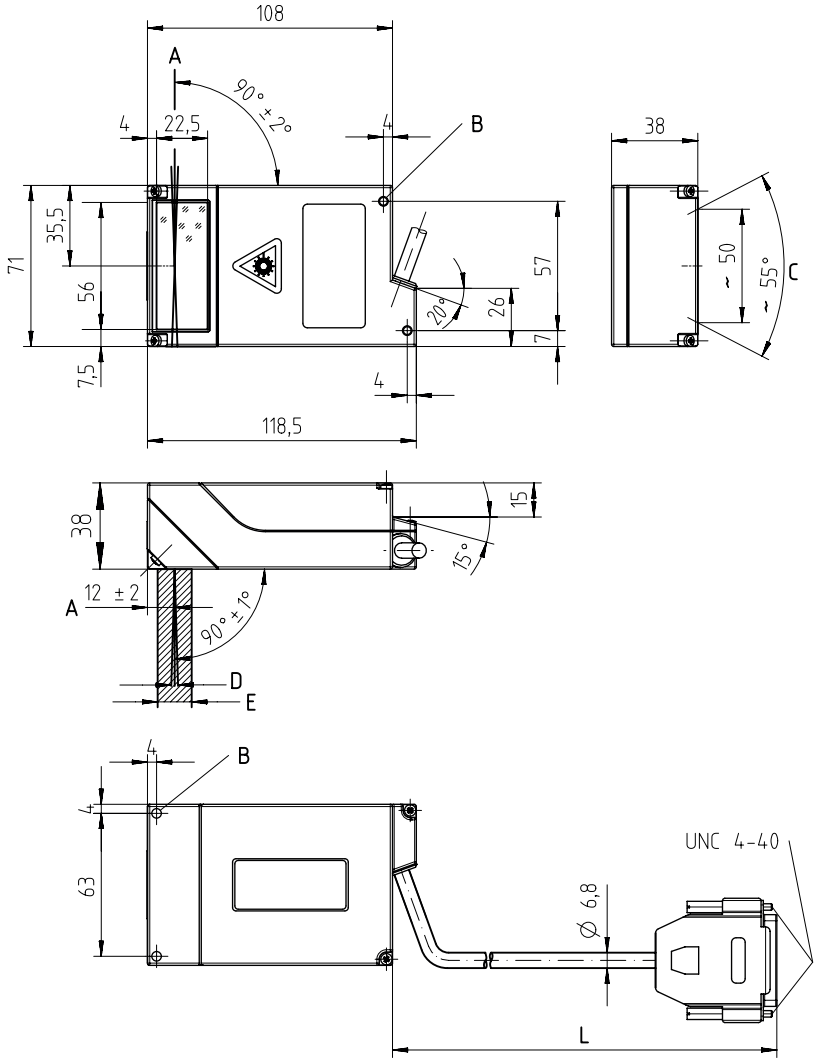

all dimensions in mm

A	Optical axis
B	M4 mounting thread, 4 mm deep (4x)
C	Laser beam
D	Rastering max. 3 mm at a distance of 200 mm
E	Optical beam path (for received light), approx. 15 mm wide
L	Cable length approx. 0.9 m

Fig. 12.4: Dimensioned drawing BCL 148

13 Order guide and accessories

13.1 Type overview

Tab. 13.1: Part numbers

Part no.	Part designation	Description
50131538	BCL 148 V 340 B	Single line scanner, RS 232 or RS 485 interface, 310 mm reading distance

13.2 Accessories

Tab. 13.2: Accessories

Sensor Studio configuration software Download at www.leuze.com (see chapter 6.2.1 "Downloading configuration software")	*Sensor Studio* designed according to the FDT/DTM concept. Contains: communication DTM and device DTM

	NOTICE
	On request, Leuze electronic can make available the *BCL Configuration Tool* editor program.

14 EC Declaration of Conformity

The bar code readers of the BCL 148 series have been developed and manufactured in accordance with the applicable European standards and directives.

15 Appendix

15.1 Bar code samples

1122334455

Module 0.3

Fig. 15.1: Code type 01: Interleaved 2 of 5

135AC

Module 0.3

Fig. 15.2: Code type 02: Code 39

a121314a

Module 0.3

Fig. 15.3: Code type 11: Codabar

abcde

Module 0.3

Fig. 15.4: Code 128

leuze

Module 0.3

Fig. 15.5: Code type 08: EAN 128

1 23456 78901 2

SC 2

Fig. 15.6: Code type 06: UPC-A

SC 3

Fig. 15.7: Code type 07: EAN 8