Leuze electronic

the sensor people

AMS 308*i*

Optical Laser Measurement System
Ethernet TCP/IP

en 03-2014/12 50113366
We reserve the right to
make technical changes

TECHNICAL DESCRIPTION

ПРОМЭЛЕКТРОНИКА / sales@prom-elec.com

© 2014
Leuze electronic GmbH + Co. KG
In der Braike 1
D-73277 Owen - Teck / Germany
Phone: +49 7021 573-0
Fax: +49 7021 573-199
http://www.leuze.com
info@leuze.de

The main menus

```
AMS 308i 120
Leuze electronic
        GmbH & Co. KG
SW: V 1.0.6   HW:1
SN: ----------------------
```

Device information - main menu

This menu item contains detailed information on
- Device model,
- Manufacturer,
- Software and hardware version,
- Serial number.

No entries can be made via the display.

```
Network information
Address:    ---.---.---.---
Net mask:   ---.---.---.---
Gateway:    ---.---.---.---
MAC ID:     --.--.--.--.--.--
```

Network information - main menu

Under this menu item, you will find detailed information on the network addresses.
No entries can be made via the display.

```
IO1 LSR PLB        LNK0
IO2 TMP ATT        LNK1
ERR

+ 87.000m
```

Status- and measurement data - main menu

- Display of status-, warning-, and error messages.
- Status overview of the switching inputs/outputs.
- Bar graph for the reception level.
- Activated interface.
- Measurement value.

No entries can be made via the display.
See "Indicators in the display" on page 39.

```
Parameter
  Parameter handling
  Ethernet
  Maximum position value
  I/O
  Other
```

Parameter - main menu

- Configuration of the AMS.

See "Parameter menu" on page 45.

```
Language selection
o Deutsch
● English
o Español
o Français
o Italiano
```

Language selection - main menu

- Selection of the display language.

See "Language selection menu" on page 49.

```
Service
  Status messages
  Diagnostics
  Expanded diagnostics
```

Service - main menu

- Display of status messages.
- Display of diagnostic data.

No entries can be made via the display.
See "Service menu" on page 50.

Device buttons:

- Navigate **upward/laterally**
- Navigate **downward/laterally**
- ESC **ESCAPE** leave
- **ENTER** confirm

Input of values

```
100
 <-0123456789     save
Standard ----- Unit
   126  |     |
```

- ◄ + ↵ **Delete character**
- 0...9 + ↵ **Enter digit**
- save + ↵ **Save input**

1 General information 4
1.1 Explanation of symbols 4
1.2 Declaration of conformity 4
1.3 Description of functions AMS 308*i* 5

2 Safety 6
2.1 Intended use 6
2.2 Foreseeable misuse 7
2.3 Competent persons 7
2.4 Disclaimer 8
2.5 Laser safety notices 8

3 Fast commissioning / operating principle 11
3.1 Mounting the AMS 308*i* 11
3.1.1 Mounting the device 11
3.1.2 Mounting the reflector 11
3.2 Connecting the voltage supply 12
3.3 Display 12
3.4 AMS 308*i* on the Ethernet TCP/IP 12
3.5 Commissioning of the AMS 308*i* 13
3.5.1 Manually setting the IP address 13
3.5.2 Automatically setting the IP address 13
3.5.3 Defining Ethernet host communication 13

4 Specifications 15
4.1 Specifications of the laser measurement system 15
4.1.1 General specifications AMS 308*i* 15
4.1.2 Dimensioned drawing AMS 308*i* 17
4.1.3 Type overview AMS 308*i* 18

5 Installation and mounting 19
5.1 Storage, transportation 19
5.2 Mounting the AMS 308*i* 20
5.2.1 Optional mounting bracket 22
5.2.2 Parallel mounting of the AMS 308*i* 23
5.2.3 Parallel mounting of AMS 308*i* and DDLS optical data transmission 24
5.3 Mounting the AMS 308*i* with laser beam deflector unit 25

5.3.1 Mounting the laser beam deflector unit With integrated mounting bracket 25
5.3.2 Dimensioned drawing of US AMS 01 deflector unit 26
5.3.3 Mounting the US 1 OMS deflector unit without mounting bracket 27

6 Reflectors 28

6.1 General information 28

6.2 Description of the reflective tape 28
6.2.1 Specifications of the self-adhesive foil 29
6.2.2 Specifications of the reflective tape on a metal plate 29
6.2.3 Dimensioned drawing of reflective tape on a metal plate 30
6.2.4 Specifications of heated reflectors 31
6.2.5 Dimensioned drawing of heated reflectors 32

6.3 Selecting reflector sizes 33

6.4 Mounting the reflector 34
6.4.1 General information 34
6.4.2 Mounting the reflector 34
6.4.3 Table of reflector pitches 37

7 Electrical connection 38

7.1 Safety notices for the electrical connection 38

7.2 PWR – voltage supply / switching input/output 39

7.3 Ethernet TCP/IP BUS IN 39

7.4 Ethernet TCP/IP BUS OUT 40

7.5 Service 40

8 Display and control panel AMS 308*i* 41

8.1 Structure of the control panel 41

8.2 Status display and operation 41
8.2.1 Indicators in the display 41
8.2.2 LED status displays 43
8.2.3 Control buttons 45

8.3 Menu description 46
8.3.1 The main menus 46
8.3.2 Parameter menu 47
8.3.3 Language selection menu 52
8.3.4 Service menu 52

8.4 Operation 52

9 Ethernet TCP/IP interface 54
9.1 General information on Ethernet 54
9.1.1 Ethernet – star topology 54
9.1.2 Ethernet with linear topology 55
9.2 Electrical connection of the 56
9.3 Ethernet - Commissioning of the AMS 308*i* 57
9.3.1 Manually setting the IP address 57
9.3.2 Automatically setting the IP address 58
9.4 Communication protocol (Leuze binary protocol via TCP/IP) 59
9.4.1 Query telegram on the AMS 308*i* 59
9.4.2 Answer telegram of the AMS 308*i* 60

10 Diagnostics and troubleshooting 62
10.1 Service and diagnostics in the display of the AMS 308*i* 62
10.1.1 Status messages 62
10.1.2 Diagnostics 63
10.1.3 Expanded diagnostics 63
10.2 General causes of errors 63
10.2.1 Power LED 65
10.3 Interface errors 65
10.3.1 BUS LED 65
10.4 Status display in the display of the AMS 308*i* 65

11 Type overview and accessories 67
11.1 Type key 67
11.2 Type overview AMS 308*i* (Ethernet TCP/IP) 67
11.3 Overview of reflector types 68
11.4 Accessories 68
11.4.1 Accessory mounting bracket 68
11.4.2 Accessory deflector unit 68
11.4.3 Accessory M12 connector 68
11.4.4 Accessory ready-made cables for voltage supply 69
11.4.5 Accessory ready-made cables for Ethernet 70

12 Maintenance 72
12.1 General maintenance information 72
12.2 Repairs, servicing 72
12.3 Disassembling, packing, disposing 72

1 General information

1.1 Explanation of symbols

The symbols used in this operating manual are explained below.

Attention!

This symbol precedes text messages which must strictly be observed. Failure to comply with this information results in injuries to personnel or damage to the equipment.

Attention Laser!

This symbol warns of possible danger caused by hazardous laser radiation.

Notice!

This symbol indicates text passages containing important information.

1.2 Declaration of conformity

The AMS 308*i* absolute measuring optical laser measurement system was designed and manufactured in accordance with applicable European directives and standards.

The AMS series is "UL LISTED" according to American and Canadian safety standards and fulfills the requirements of Underwriter Laboratories Inc. (UL).

Notice!

The Declaration of Conformity for these devices can be requested from the manufacturer.

The manufacturer of the product, Leuze electronic GmbH + Co. KG in D-73277 Owen/Teck, possesses a certified quality assurance system in accordance with ISO 9001.

1.3 Description of functions AMS 308*i*

The AMS 308*i* optical laser measurement system calculates distances to fixed as well as moving system parts. The distance to be measured is calculated according to the principle of the propagation time of radiated light. Here, the light emitted by the laser diode is reflected by a reflector onto the receiving element of the laser measurement system. The AMS 308*i* uses the "propagation time" of the light to calculate the distance to the reflector. The high absolute measurement accuracy of the laser measurement system and the fast integration time are designed for position control applications.

With the AMS 3xx*i* product series, Leuze electronic makes available a range of internationally relevant interfaces. Note that each interface version listed below corresponds to a different AMS 3xx*i* model.

PROFIBUS, SSI	**AMS 304*i***
PROFINET	**AMS 348*i***
DeviceNet	**AMS 355*i***
EtherNet/IP	**AMS 358*i***
CANopen	**AMS 335*i***
EtherCAT	**AMS 338*i***
Ethernet	**AMS 308*i***
INTERBUS	**AMS 384*i***
RS485	**AMS 301*i***
RS232, RS422	**AMS 300*i***

2 Safety

This sensor was developed, manufactured and tested in line with the applicable safety standards. It corresponds to the state of the art.

2.1 Intended use

The AMS is an absolute measuring optical laser measurement system which allows distance measurement of up to 300 m against a reflector.

Areas of application

The AMS is designed for the following areas of application:

- Positioning of automated, moving plant components
- Travel and lifting axes of high-bay storage devices
- Repositioning units
- Gantry crane bridges and their trolleys
- Lifts
- Electroplating plants

CAUTION

Observe intended use!

- Only operate the device in accordance with its intended use. The protection of personnel and the device cannot be guaranteed if the device is operated in a manner not complying with its intended use.
  Leuze electronic GmbH + Co. KG is not liable for damages caused by improper use.
- Read the technical description before commissioning the device. Knowledge of this technical description is an element of proper use.

NOTICE

Comply with conditions and regulations!

- Observe the locally applicable legal regulations and the rules of the employer's liability insurance association.

Attention

For UL applications, use is permitted exclusively in Class 2 circuits according to NEC (National Electric Code).

2.2 Foreseeable misuse

Any use other than that defined under "Intended use" or which goes beyond that use is considered improper use.

In particular, use of the device is not permitted in the following cases:

- Rooms with explosive atmospheres
- Circuits relevant to safety
- For medicinal purposes

NOTICE
Do not modify or otherwise interfere with the device. Do not carry out modifications or otherwise interfere with the device. The device must not be tampered with and must not be changed in any way. The device must not be opened. There are no user-serviceable parts inside. Repairs must only be performed by Leuze electronic GmbH + Co. KG.

2.3 Competent persons

Connection, mounting, commissioning and adjustment of the device must only be carried out by competent persons.

Prerequisites for competent persons:

- They have a suitable technical education.
- They are familiar with the rules and regulations for occupational safety and safety at work.
- They are familiar with the technical description of the device.
- They have been instructed by the responsible person on the mounting and operation of the device.

Certified electricians

Electrical work must be carried out by a certified electrician.

Due to their technical training, knowledge and experience as well as their familiarity with relevant standards and regulations, certified electricians are able to perform work on electrical systems and independently detect possible dangers.

In Germany, certified electricians must fulfill the requirements of accident-prevention regulations BGV A3 (e.g. electrician foreman). In other countries, there are respective regulations that must be observed.

2.4 Disclaimer

Leuze electronic GmbH + Co. KG is not liable in the following cases:

- The device is not being used properly.
- Reasonably foreseeable misuse is not taken into account.
- Mounting and electrical connection are not properly performed.
- Changes (e.g., constructional) are made to the device.

2.5 Laser safety notices

ATTENTION LASER RADIATION – LASER CLASS 2

Never look directly into the beam!

The device satisfies the requirements of IEC 60825-1:2007 (EN 60825-1:2007) safety regulations for a product in **laser class 2** as well as the U.S. 21 CFR 1040.10 regulations with deviations corresponding to "Laser Notice No. 50" from June 24th, 2007.

- Never look directly into the laser beam or in the direction of reflecting laser beams.
  If you look into the beam path over a longer time period, there is a risk of injury to the retina.
- Do not point the laser beam of the device at persons!
- Interrupt the laser beam using a non-transparent, non-reflective object if the laser beam is accidentally directed towards a person.
- When mounting and aligning the device, avoid reflections of the laser beam off reflective surfaces!
- CAUTION! The use of operating or adjusting devices other than those specified here or carrying out of differing procedures may lead to dangerous exposure to radiation.
- Adhere to the applicable legal and local regulations regarding protection from laser beams.
- The device must not be tampered with and must not be changed in any way.
  There are no user-serviceable parts inside the device.
  Repairs must only be performed by Leuze electronic GmbH + Co. KG.

NOTICE

Affix laser information and warning signs!

Laser information and warning signs are attached to the device (see figure 2.1):

In addition, self-adhesive laser warning and information signs (stick-on labels) are supplied in several languages (see figure 2.2).

- Affix the laser information sheet to the device in the language appropriate for the place of use.

  When using the device in the US, use the stick-on label with the "Complies with 21 CFR 1040.10" notice.
- Affix the laser information and warning signs near the device if no signs are attached to the device (e.g., because the device is too small) or if the attached laser information and warning signs are concealed due to the installation position.

  Affix the laser information and warning signs so that they are legible without exposing the reader to the laser radiation of the device or other optical radiation.

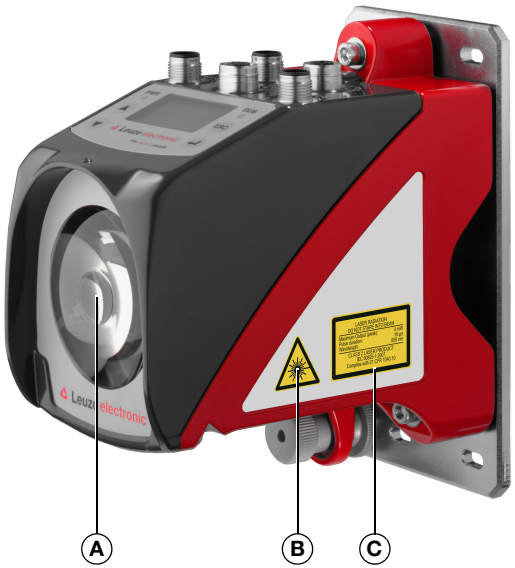

A Laser aperture
B Laser warning sign
C Laser information sign with laser parameters

Figure 2.1: Laser apertures, laser warning signs

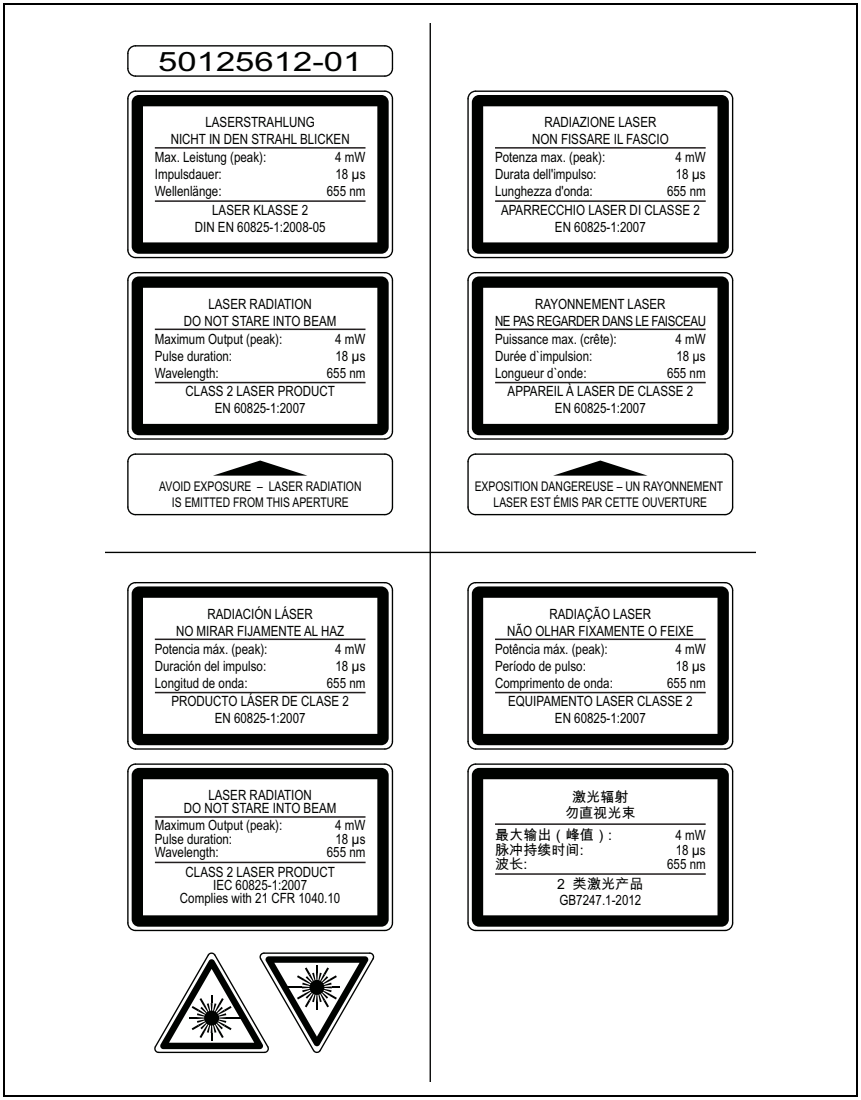

Figure 2.2: Laser warning and information signs – supplied stick-on labels

3 Fast commissioning / operating principle

Notice!

*Below, you will find a **short description for the initial commissioning** of the AMS 308i. Detailed explanations for the listed points can be found throughout the handbook.*

3.1 Mounting the AMS 308*i*

The AMS 308*i* and the corresponding reflector are mounted on two mutually opposing, plane-parallel, flat walls.

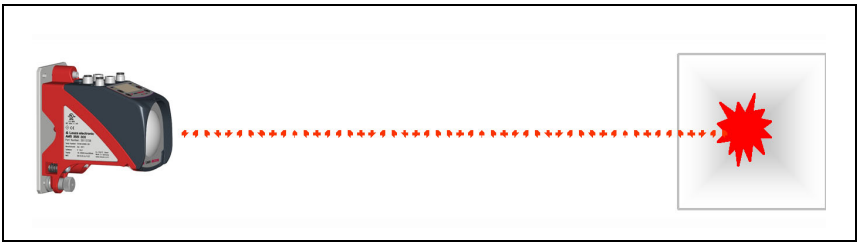

Figure 3.1: Schematic illustration of mounting

Attention!

For error-free position measurement, there must be an unobstructed line-of-sight between the AMS 308*i* *and the reflector.*

3.1.1 Mounting the device

The laser is mounted using 4 screws (M5).

Alignment is performed using 2 adjustment screws. Adjust so that the laser light spot is positioned at the center of the reflector. The alignment is to be secured with the knurled nut and locked with the M5 nut.

Further information can be found in chapter 5.2 and chapter 5.3.

3.1.2 Mounting the reflector

The reflector is mounted using 4 screws (M5). The reflector is angled using the spacer sleeves included. Incline the reflector by approx. 1°.

Detailed information can be found in chapter 6.4.

3.2 Connecting the voltage supply

The laser measurement system is connected using M12 connectors. The voltage supply is connected via the PWR M12 connection (18 … 30VDC). 2 freely adjustable switching inputs/outputs for individual adaptation to the respective application are also available here.

Detailed information can be found in chapter 7.

3.3 Display

Once the laser measurement system is supplied with voltage, the device status as well as the measured position values can be read on the display. The display automatically switches to the display of the measurement values.

Use the up/down buttons ▲ ▼ to the left of the display to read and change a wide range of data and parameters.

Detailed information can be found in chapter 8.

3.4 AMS 308*i* on the Ethernet TCP/IP

Notice!

The AMS 308i can communicate via TCP/IP or UDP. Standard is TCP/IP. If communication should be via UDP, the "UDP" protocol must be activated via the display in the "Ethernet" - "Host communication" submenu.

Standalone operation in Ethernet network

During stand-alone operation of the AMS 308*i*, the host interface of the primary system is connected to HOST/BUS IN. Thus, a star structure (Ethernet structure) is possible.

Network operation in Ethernet network

In network operation, the primary system (PC/PLC) is connected to the host interface of the AMS 308*i*. With the aid of the "switch" integrated in the AMS 308*i*, the bus connection to the next participant, e.g. a AMS 308*i*, can occur directly via the BUS OUT socket!

Notice!

The AMS 308i has a built-in DHCP client for automatically receiving assigned addresses. The addresses can be assigned either via DHCP or manually via the display. When assigning manually, make sure the IP addresses assigned are unique.
DHCP is deactivated by default.

3.5 Commissioning of the AMS 308*i*

3.5.1 Manually setting the IP address

Notice!

To set the network addresses, parameter enabling must be activated, as described in chapter 8.4.

If your system does not include a DHCP server or if the IP addresses of the devices are to be set permanently, proceed as follows:

- *Have the network administrator specify the data for IP address, net mask and gateway address of the AMS 308i.*
- *Set these values on the AMS 308i.*

The menu structure of the display entry can be found at the end of the manual. Call up the corresponding menu levels and enter the respective addresses.

3.5.2 Automatically setting the IP address

If your system includes a DHCP server that is to be used to assign the IP addresses, observe the following:

DHCP address assignment is deactivated by default. To activate DHCP address assignment, parameter enabling must first be activated, see chapter 8.4.

The menu structure of the display entry can be found at the end of the manual. Call up the corresponding menu levels to activate DHCP.

Further information on entering address data can be found in chapter 9.

3.5.3 Defining Ethernet host communication

The AMS 308*i* can communicate via TCP/IP or UDP. Standard is TCP/IP. If communication should be via UDP, the "UDP" protocol must be activated via the display in the "Ethernet" - "Host communication" submenu. UDP and TCP/IP can be activated simultaneously and used in parallel.

If you would like to use the TCP/IP protocol for your application, you must also define whether the AMS 308*i* is to operate as a TCP client or as a TCP server.

- *Contact your network administrator to determine which communication protocol is used.*

TCP/IP

Notice!

Nutzen Sie bei der Displayeingabe den Ausklapper auf der letzten Seite zur Orientierung in der Menüstruktur.

In **TCP client mode**, the AMS 308*i* actively establishes the connection to the primary host system (PC / PLC as server). The AMS 308*i* requires from the user the IP address of the server (host system) and the port number on which the server (host system) accepts a connection. In this case, the AMS 308*i* determines when and with whom a connection is established!

↳ *With a AMS 308i as TCP client, also set the following values:*

- IP address of the TCP server (normally the PLC/host computer)
- Port number of the TCP server
- Timeout for the wait time for an answer from the server
- Repetition time for renewed communication attempt following a timeout

In **TCP server mode**, the primary host system (PC / PLC) actively establishes the connection and the connected AMS 308*i* waits for the connection to be set up. The TCP/IP stack requires information from the user regarding the local port of the AMS 308*i* (port number) on which the connection requests of a client application (host system) are to be accepted. If there is a connection request and a connection is established by the primary host system (PC / PLC as client), the AMS 308*i* (server mode) accepts the connection. Data can then be sent and received.

↳ *With a AMS 308i as TCP server, also set the following values:*

- Port number for the communication of the AMS 308*i* with the TCP clients.

UDP

The AMS 308*i* requires from the user the IP address and the port number of the communication partner. Correspondingly, the host system (PC / PLC) requires the set IP address of the AMS 308*i* and the selected port number. By assigning these parameters, a socket is formed via which the data can be sent and received.

↳ *Activate the UDP protocol.*

↳ *Also set the following values:*

- IP address of the communication partner.
- Port number of the communication partner.

Notice!

The AMS 308i also offers the possibility of automatically accepting the address and port.

4 Specifications

4.1 Specifications of the laser measurement system

4.1.1 General specifications AMS 308*i*

Measurement data	AMS 308*i* 40 (H)	AMS 308*i* 120 (H)	AMS 308*i* 200 (H)	AMS 308*i* 300 (H)
Measurement range	0.2 … 40 m	0.2 … 120 m	0.2 … 200 m	0.2 … 300 m
Accuracy	± 2 mm	± 2 mm	± 3 mm	± 5 mm
Consistency [1]	0.3 mm	0.5 mm	0.7 mm	1.0 mm
Light spot diameter	≤ 40 mm	≤ 100 mm	≤ 150 mm	≤ 225 mm
Measurement value output	1.7 ms			
Integration time	8 ms			
Resolution	adjustable, see chapter of the individual interfaces			
Temperature drift	≤ 0.1 mm/K			
Ambient temperature sensitivity	1 ppm/K			
Air pressure sensitivity	0.3 ppm/hPa			
Traverse rate	≤ 10 m/s			
Electrical data				
Supply voltage Vin [2]	18 … 30 VDC			
Current consumption	without device heating: ≤ 250 mA / 24 VDC with device heating: ≤ 500 mA / 24 VDC			
Optical data				
Transmitter	laser diode, red light, wavelength 650 … 690 nm			
Laser class	2 acc. to EN 60825-1, CDRH			
Interfaces				
Interface type	2x Ethernet TCP/IP on 2x M12 (D)			
Protocol	Ethernet TCP/IP (Client/ Server) / UDP			
Baud rate	10/100 Mbit/s			
Operating and display elements				
Keyboard	4 buttons			
Display	monochromatic graphical display, 128 x 64 pixels			
LED	4 LEDs, 2 of which are used to display the Ethernet connection			

Inputs/outputs	
Quantity	2, programmable
Input	protected against polarity reversal
Output	max. 60 mA, short-circuit proof
Mechanical data	
Housing	cast zinc and aluminum
Optics	glass
Weight	approx. 2.45 kg
Protection class	IP 65 acc. to EN 60529 [3]
Environmental conditions	
Operating temperature	
without device heating	-5 °C … +50 °C
with device heating	-30 °C … +50 °C [4]
Storage temperature	-30 °C … +70 °C
Air humidity	max. 90 % rel. humidity, non-condensing
Mechanical/electrical loading capacity	
Vibrations	acc. to EN 60068-2-6
Noise	acc. to EN 60060-2-64
Shock	acc. to EN 60068-2-27
EMC	acc. to EN 61000-6-2 and EN 61000-6-4 [5]

1) Statistical error: 1 sigma; minimum switch-on time: 2 min.
2) For UL applications: only for use in "Class 2" circuits acc. to NEC.
3) With screwed-on M12 plugs or mounted caps.
4) With devices with heating, the switch on/off area of the internal heating can be extended to prevent condensation from forming. A 100% prevention of the formation of condensation cannot be guaranteed due to the limited heating capacity of the AMS 308*i*.
5) This is a Class A product. In a domestic environment this product may cause radio interference, in which case the operator may be required to take adequate measures.

The AMS 308*i* is designed in accordance with safety class III for supply with PELV (protective extra-low voltage).

4.1.2 Dimensioned drawing AMS 308*i*

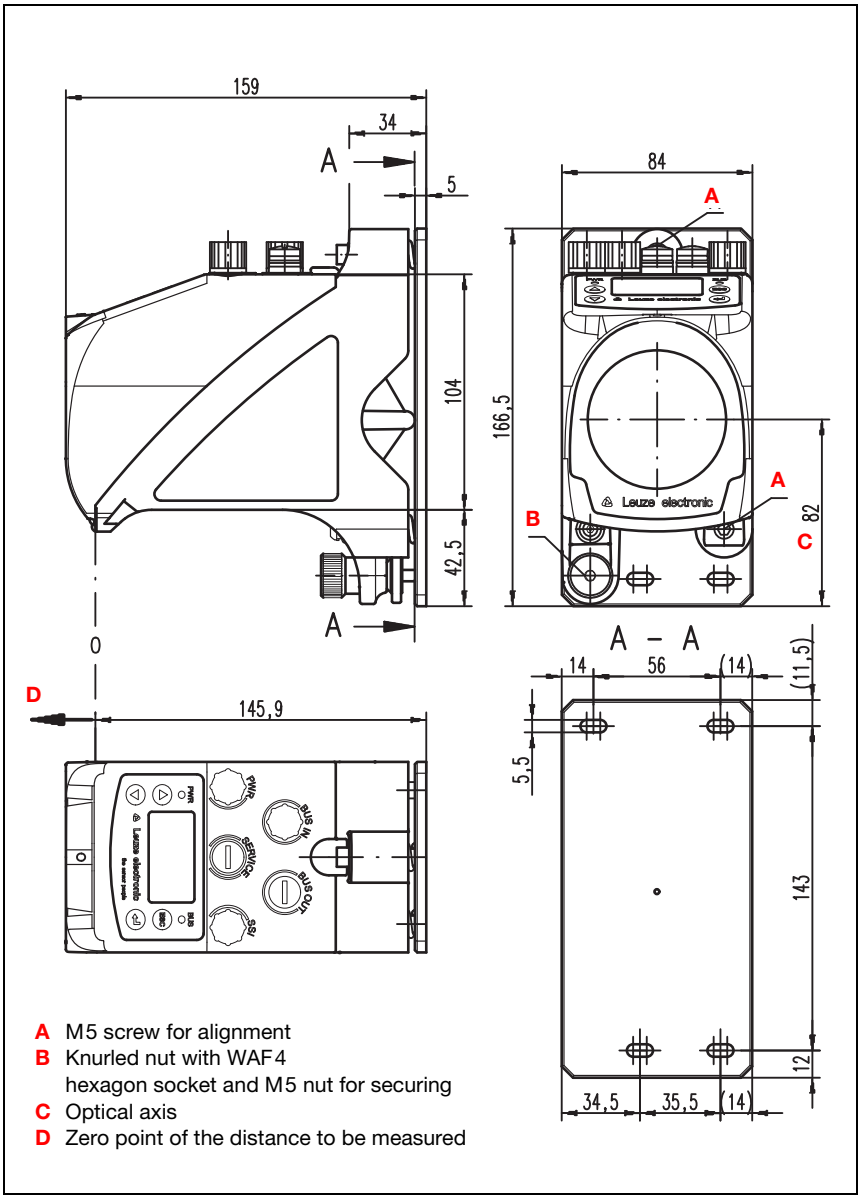

Figure 4.1: Dimensioned drawing AMS 308*i*

4.1.3 Type overview AMS 308*i*

AMS 308i (Ethernet TCP/IP)

Type designation	Description	Part no.
AMS 308*i* 40	40 m operating range, Ethernet TCP/IP interface	50113685
AMS 308*i* 120	120 m operating range, Ethernet TCP/IP interface	50113686
AMS 308*i* 200	200 m operating range, Ethernet TCP/IP interface	50113687
AMS 308*i* 300	300 m operating range, Ethernet TCP/IP interface	50113688
AMS 308*i* 40 H	40 m operating range, Ethernet TCP/IP interface, integrated heating	50113689
AMS 308*i* 120 H	120 m operating range, Ethernet TCP/IP interface, integrated heating	50113690
AMS 308*i* 200 H	200 m operating range, Ethernet TCP/IP interface, integrated heating	50113691
AMS 308*i* 300 H	300 m operating range, Ethernet TCP/IP interface, integrated heating	50113692

Table 4.1: Type overview AMS 308*i*

5 Installation and mounting

5.1 Storage, transportation

Attention!

When transporting or storing, package the device so that it is protected against collision and humidity. Optimum protection is achieved when using the original packaging. Heed the required environmental conditions specified in the technical data.

Unpacking

- *Check the packaging for any damage. If damage is found, notify the post office or shipping agent as well as the supplier.*
- *Check the delivery contents using your order and the delivery papers:*
  - Delivered quantity
  - Device type and model as indicated on the nameplate
  - Brief manual

The name plate provides information as to what AMS 308*i* type your device is. For specific information, please refer to chapter 11.2.

Name plates

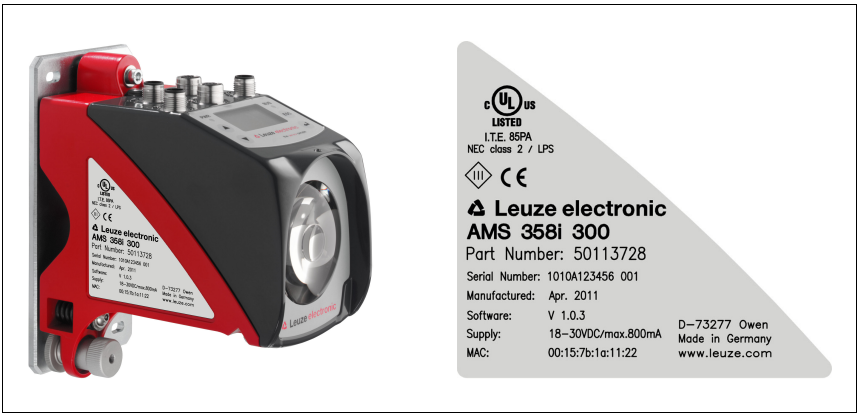

Figure 5.1: Device name plate using the AMS 300*i* as an example

Notice!

Please note that the shown name plate is for illustration purposes only; the contents do not correspond to the original.

- *Save the original packaging for later storage or shipping.*

If you have any questions concerning your shipment, please contact your supplier or your local Leuze electronic sales office.

Observe the applicable local regulations when disposing of the packaging materials.

5.2 Mounting the AMS 308*i*

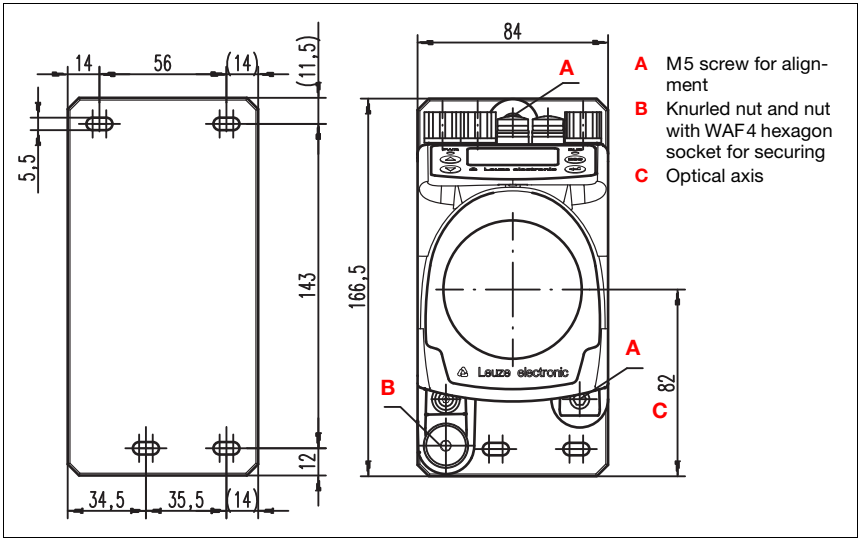

Figure 5.2: Mounting the device

The AMS 308*i* and the corresponding reflector are mounted on two mutually opposing, plane-parallel, flat walls or system parts. For error-free position measurement, there must be an unobstructed line-of-sight connection between the AMS 308*i* and the reflector.

Use M5 screws to fasten the laser measurement system. Secure the screws with a toothed lock washer to protect against loosening caused by vibrations.

Aligning the laser light spot in the center of the reflector

The laser light spot has to be aligned so that it always hits the center of the opposing reflector, both at close range as well as at the maximum measurement distance. **To align, use the two M5 Allen screws** ("**A**" in figure 5.2). When aligning please ensure that the knurled nut and the lock nut ("**B**" in figure 5.2) are opened wide.

Attention!

To prevent the laser measurement system from moving out of alignment during continuous operation, subsequently hand-tighten the knurled nut and counterlock with the nut with WAF4 hexagon socket ("B" in figure 5.2). Knurled nut and nut must not be tightened until alignment has been completed.

Attention!

The device must not be opened. Failure to comply will render the guarantee void. Warranted features cannot be guaranteed after the device has been opened.

5.2.1 Optional mounting bracket

A mounting bracket for mounting the AMS 308*i* on a flat, horizontal surface is available as an optional accessory.

Type designation:	MW OMS/AMS 01
Part no.:	50107255

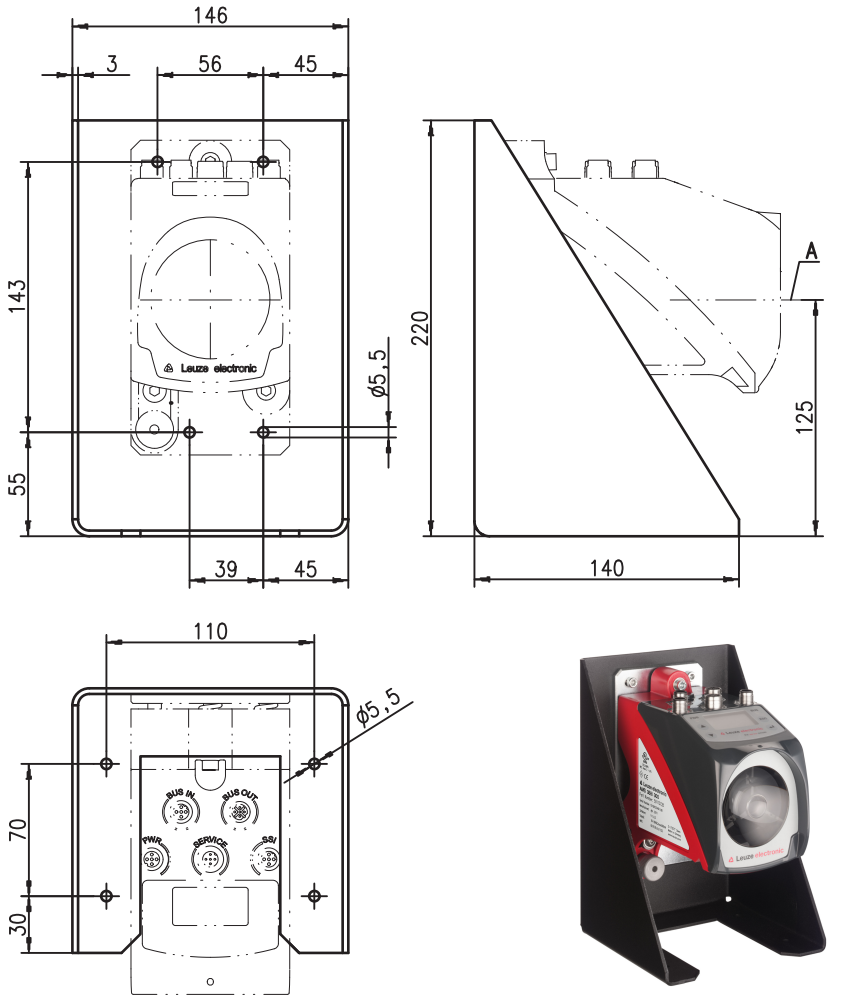

A Laser beam

Figure 5.3: Optional mounting bracket

5.2.2 Parallel mounting of the AMS 308*i*

Definition of the term "parallel spacing"

As shown in figure 5.4, dimension X describes the "parallel spacing" of the inner edges of the two laser light spots on the reflector.

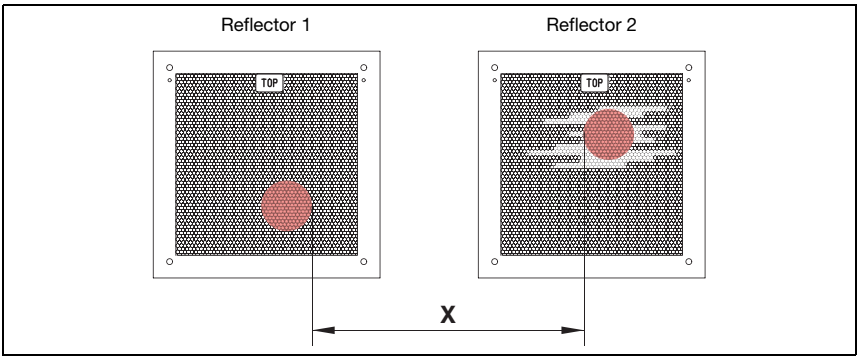

Figure 5.4: Minimum parallel spacing X between adjacent AMS 308*i*

The diameter of the light spot increases with distance.

	AMS 308*i* 40 (H)	AMS 308*i* 120 (H)	AMS 308*i* 200 (H)	AMS 308*i* 300 (H)
Max. measurement distance	40 m	120 m	200 m	300 m
Light spot diameter	≤ 40 mm	≤ 100 mm	≤ 150 mm	≤ 225 mm

Thus, the center-to-center spacing of the two AMS 308*i* devices with respect to one another can be calculated as a function of the maximum measurement distance.

To define the minimum parallel spacing between two AMS 308*i*, it is necessary to distinguish between three different arrangements of AMS 308*i* and reflectors.

The AMS 308*i* are mounted stationary and in parallel on one plane.
Both reflectors move independently of one another at different distances to the AMS 308*i*.

Minimum parallel spacing X of the two laser light spots:

X = 100 mm + (max. measurement distance in mm x 0.01)

The AMS 308*i* are mounted stationary and in parallel on one plane.
Both reflectors move in parallel at the same distance to the AMS 308*i*.

Measurement distance **up to 120 m**: minimum parallel spacing **X ≥ 600 mm**

Measurement distance **up to 200 m**: minimum parallel spacing **X ≥ 750 mm**

Measurement distance **up to 300 m**: minimum parallel spacing **X ≥ 750 mm**

The reflectors are mounted stationary and in parallel on one plane.
Both AMS 308*i* move independently of one another at different or the same distances to the reflectors.

Measurement distance **up to 120 m**: minimum parallel spacing **X ≥ 600 mm**

Measurement distance **up to 200 m**: minimum parallel spacing **X ≥ 750 mm**

Measurement distance **up to 300 m**: minimum parallel spacing **X ≥ 750 mm**

Notice!

*Please note that when the AMS 308*i* are mounted in a mobile manner, travel tolerances could cause the two laser light spots to move towards each other.*
*Take the travel tolerances of the vehicle into account when defining the parallel spacing of adjacent AMS 308*i*.*

5.2.3 Parallel mounting of AMS 308*i* and DDLS optical data transmission

The optical data transceivers of the DDLS series and the AMS 308*i* do not interfere with one another. Depending on the size of the used reflector, the DDLS can be mounted with a minimum parallel spacing of 100 mm to the AMS 308*i*. The parallel spacing is independent of the distance.

5.3 Mounting the AMS 308*i* with laser beam deflector unit

General information

The two available deflector units are used for the 90° deflection of the laser beam, see "Accessory deflector unit" on page 68.

Attention!

The deflector units are designed for a maximum range of 40 m.
Longer distances on request.

5.3.1 Mounting the laser beam deflector unit With integrated mounting bracket

The AMS 308*i* is screwed onto the mechanism of the US AMS 01 deflector unit. The mirror can be mounted for three deflection directions:

1. Upward beam deflection
2. Beam deflection to the left
3. Beam deflection to the right

The deflector unit is mounted on plane-parallel, flat walls or plant components. For error-free position measurement, there must be an interruption-free line-of-sight between the AMS 308*i*… and the deflection mirror as well as between the mirror and the reflector.

Use the M5 screws to mount the deflector unit. Secure the screws with a toothed lock washer to protect against loosening caused by vibrations.

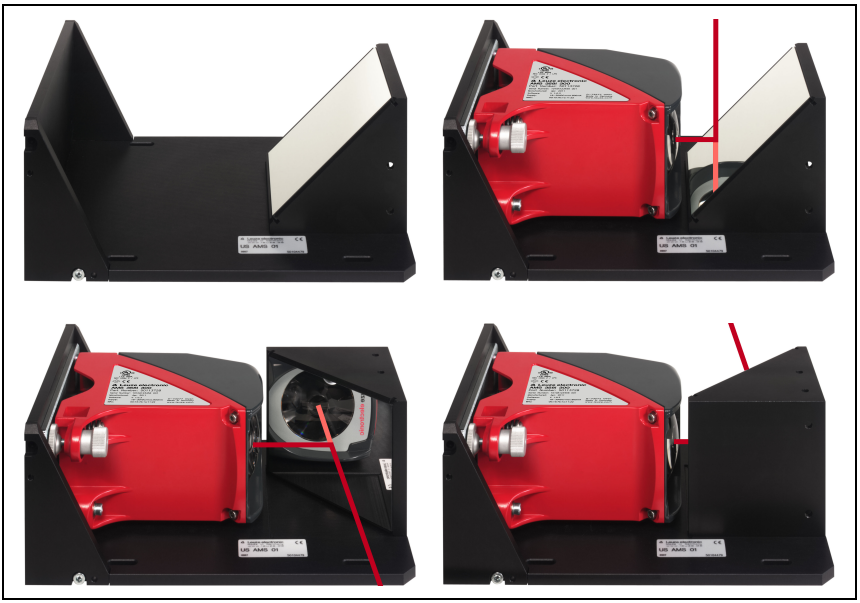

Figure 5.5: Mounting variants of the US AMS 01 laser beam deflector unit

5.3.2 Dimensioned drawing of US AMS 01 deflector unit

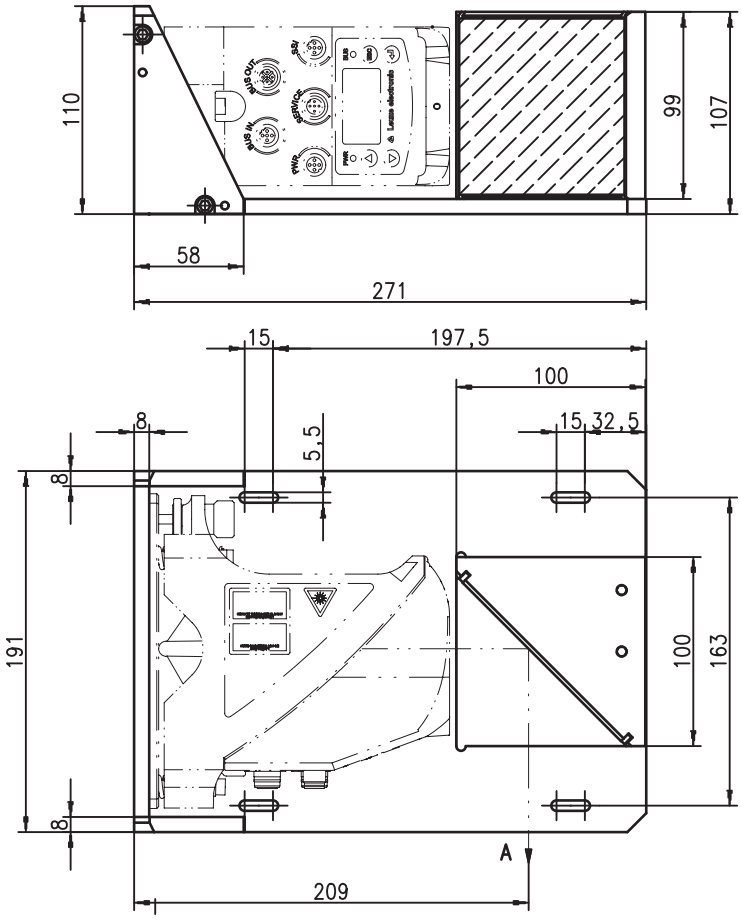

A Laser beam

Figure 5.6: Dimensioned drawing of US AMS 01 deflector unit

5.3.3 Mounting the US 1 OMS deflector unit without mounting bracket

The US 1 OMS deflector unit and the AMS 308*i* are mounted separately.

Notice!

When mounting, make certain that the laser light spot of the AMS 308i is aligned in the center of the deflection mirror.

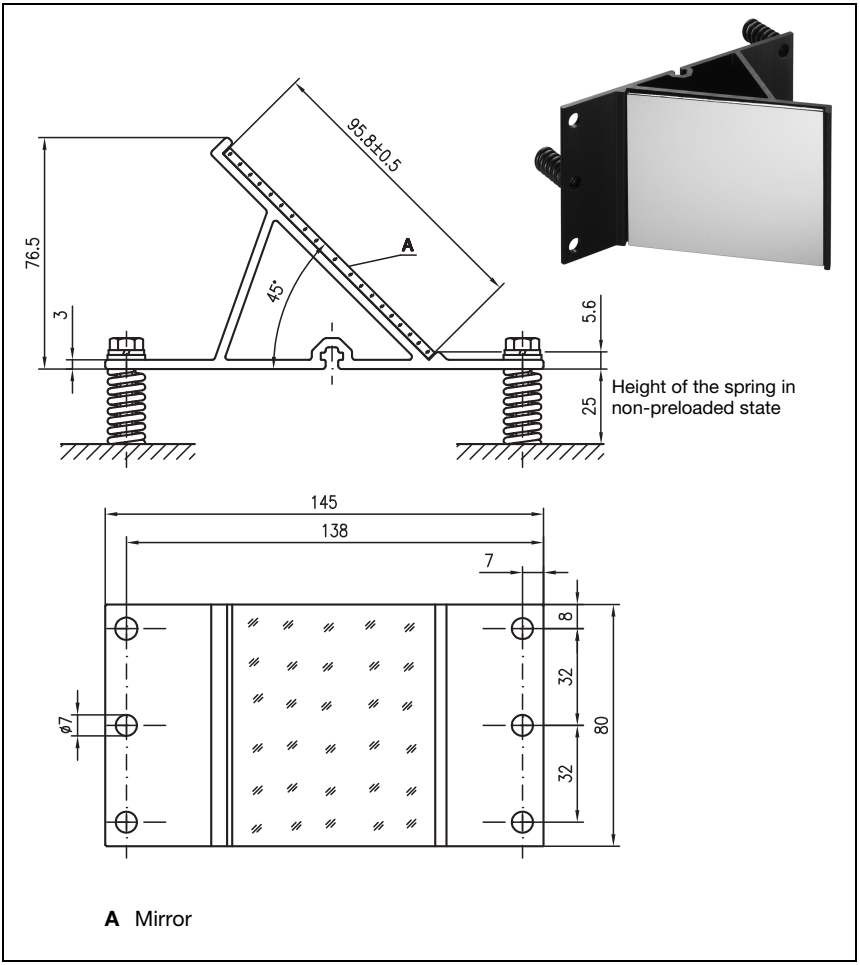

Figure 5.7: Photo and dimensioned drawing of the US 1 OMS deflector unit

Alignment of the laser light spot on the reflector is performed as described in chapter 5.2.

6 Reflectors

6.1 General information

The AMS 308*i* measures distances against a reflective tape specified by Leuze electronic. All provided specifications for the AMS 308*i*, such as the operating range or accuracy, can only be achieved with the reflective tape specified by Leuze electronic.

The reflective tapes are available as adhesive tapes, affixed to a metal plate and with an integrated heater especially for use at low temperatures. Reflective tapes with heating have the designation "**Reflective tape ...x...-H**", where "**H**" is an abbreviation for the heating variant.

The reflective tapes/reflectors must be ordered separately. The choice of size is left to the user. In chapter 6.3, recommendations on reflector size are provided as a function of the distance that is to be measured. In any case, the user must check to determine whether the recommendation is suitable for the respective application.

6.2 Description of the reflective tape

The reflective tape consists of a white, microprism-based reflective material. The microprisms are protected with a highly transparent, hard protective layer.

Under certain circumstances, the protective layer may lead to surface reflections. The surface reflections can be directed past the AMS 308*i* by positioning the reflective tape at a slight incline. The inclination of the reflective tape/reflectors is described in chapter 6.4.2. The required pitch can be found in table 6.1 "Reflector pitch resulting from spacer sleeves" on page 37.

The reflective tapes are provided with a protective foil that can easily be pulled off. This must be removed from the reflector before the complete system is put into operation.

6.2.1 Specifications of the self-adhesive foil

	Part		
Type designation	**Reflective tape 200x200-S**	**Reflective tape 500x500-S**	**Reflective tape 914x914-S**
Part no.	50104361	50104362	50108988
Foil size	200x200mm	500x500mm	914x914mm
Recommended application temperature for adhesive tape	+5°C … +25°C		
Temperature resistance, affixed	-40°C … +80°C		
Mounting surface	The mounting surface must be clean, dry and free of grease.		
Cutting the tape	Cut with a sharp tool, always on the side of the prism structure.		
Cleaning	Do not use any agents that act with a grinding effect. A conventional household detergent can be used as a cleaning agent. Rinse with clear water and dry the surface.		
Storing the foil	Store in a cool and dry place.		

6.2.2 Specifications of the reflective tape on a metal plate

The reflective tape is affixed to a metal plate. Included with the metal plate are spacers for positioning at an incline - for avoiding surface reflections - (see chapter 6.4.2 "Mounting the reflector").

	Part		
Type designation	**Reflective tape 200x200-M**	**Reflective tape 500x500-M**	**Reflective tape 914x914-M**
Part no.	50104364	50104365	50104366
Foil size	200x200mm	500x500mm	914x914mm
Outer dimensions of the metal plate	250x250mm	550x550mm	964x964mm
Weight	0.8kg	4kg	25kg
Cleaning	Do not use any agents that act with a grinding effect. A conventional household detergent can be used as a cleaning agent. Rinse with clear water and dry the surface.		
Storing the reflector	Store in a cool and dry place.		

6.2.3 Dimensioned drawing of reflective tape on a metal plate

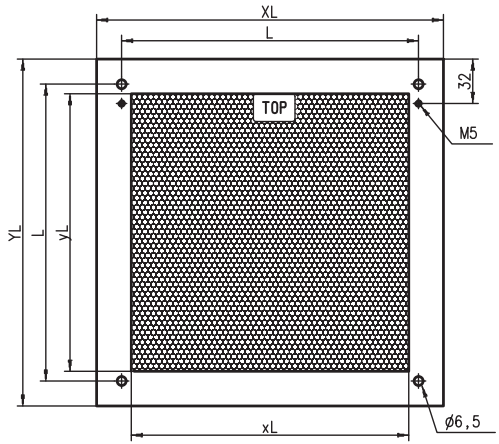

Always align the **TOP** marking with the AMS connections! (chapter 6.4.2)

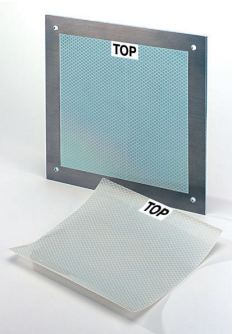

Figure 6.1: Dimensioned drawing of reflectors

Part	Reflective tape (mm)		Reflector plate (mm)		
	xL	yL	XL	YL	L
Reflective tape 200x200-M	200	200	250	250	214
Reflective tape 500x500-M	500	500	550	550	514
Reflective tape 914x914-M	914	914	964	964	928

6.2.4 Specifications of heated reflectors

The reflective tape is affixed to a heated, thermally insulated base. The insulation results in a very high energetic efficiency.

Only the reflective tape is kept at the specified temperature by the integrated heater. Through the insulation on the back, the generated heat cannot be transferred via the steel construction. Energy costs are greatly reduced in the case of continuous heating.

	Part		
Type designation	**Reflective tape 200x200-H**	**Reflective tape 500x500-H**	**Reflective tape 914x914-H**
Part no.	50115020	50115021	50115022
Voltage supply	230VAC		
Power	100W	600W	1800W
Current consumption	~ 0.5A	~ 3A	~ 8A
Length of the supply line	2 m		
Size of the reflective tape	200x200mm	500x500mm	914x914mm
Outer dimensions of the base material	250x250mm	550x550mm	964x964mm
Weight	0.5kg	2.5kg	12kg
Temperature control	Controlled heating with the following switch-on and switch-off temperatures, measured at the reflector surface.		
Switch-on temperature	~ 5°C		
Switch-off temperature	~ 20°C		
Operating temperature	-30°C … +70°C		
Storage temperature	-40°C … +80°C		
Air humidity	Max. 90%, non-condensing.		
Cleaning	Do not use any agents that act with a grinding effect. A conventional household detergent can be used as a cleaning agent. Rinse with clear water and dry the surface.		
Storing the reflector	Store in a cool and dry place.		

6.2.5 Dimensioned drawing of heated reflectors

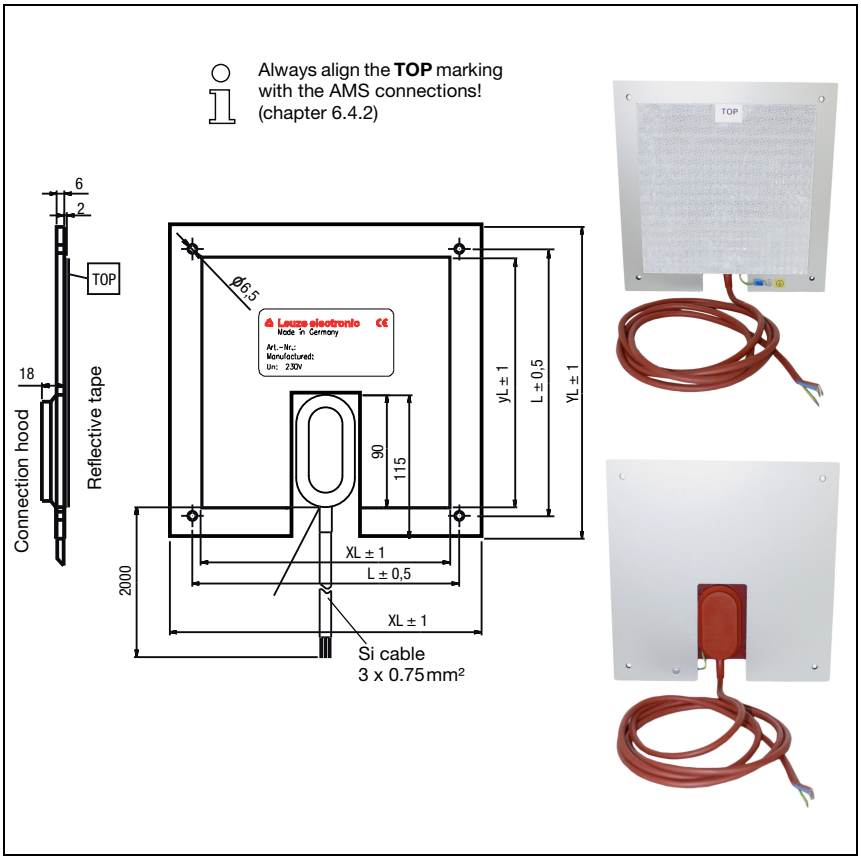

Figure 6.2: Dimensioned drawing of heated reflectors

Part	Reflective tape (mm)		Insulated base plate (mm)		
	xL	yL	XL	YL	L
Reflective tape 200x200-H	200	200	250	250	214
Reflective tape 500x500-H	500	500	550	550	514
Reflective tape 914x914-H	914	914	964	964	928

6.3 Selecting reflector sizes

Depending on system design, the reflector can be mounted so that it travels on the vehicle or it can be mounted at a fixed location.

Attention!

The reflector sizes shown below are a recommendation from Leuze electronic for on-vehicle mounting of the AMS 308i. For stationary mounting of the AMS 308i, a smaller reflector is generally sufficient for all measurement distances.
On the basis of the system planning and design, always check whether mechanical travel tolerances may require the use of a reflector larger than that which is recommended. This applies, in particular, when the laser measurement system is mounted on a vehicle. During travel, the laser beam must reach the reflector without interruption. For on-vehicle mounting of the AMS 308i, the reflector size must accommodate any travel tolerances that may arise and the associated "wandering" of the light spot on the reflector.

Overview of reflector types

Recommended reflector sizes			
AMS 308*i* selection (Operating range in m)	**Recommended reflector size (H x W)**	**Type designation …-S = Self-adhesive …-M = metal plate …-H = heating**	**Part no.**
AMS 308*i* 40 (**max. 40m**)	200x200mm	Reflective tape 200x200-S Reflective tape 200x200-M Reflective tape 200x200-H	50104361 50104364 50115020
AMS 308*i* 120 (**max. 120m**)	500x500mm	Reflective tape 500x500-S Reflective tape 500x500-M Reflective tape 500x500-H	50104362 50104365 50115021
AMS 308*i* 200 (**max. 200m**)	749x914mm 914x914mm	Reflective tape 749x914-S Reflective tape 914x914-M Reflective tape 914x914-S Reflective tape 914x914-H	50104363 50104366 50108988 50115022
AMS 308*i* 300 (**max. 300m**)	749x914mm 914x914mm	Reflective tape 749x914-S Reflective tape 914x914-M Reflective tape 914x914-S Reflective tape 914x914-H	50104363 50104366 50108988 50115022

6.4 Mounting the reflector

6.4.1 General information

Self-adhesive reflective tapes

The reflective tapes of the "Reflective tape …x…**-S**" self-adhesive series must be affixed to a flat, clean and grease-free surface. We recommend using a separate metal plate, which is to be provided on-site.

As described in table 6.1, the reflective tape must be angled.

Reflective tapes on metal

The reflective tapes of the "Reflective tape …x…**-M**" series are provided with corresponding mounting holes. Spacer sleeves are provided in the packet for achieving the necessary pitch angle. For further information see table 6.1.

Heated reflectors

The reflective tapes of the "Reflective tape ...x...**-H**" series are provided with corresponding mounting holes. Due to the voltage supply affixed on the rear, the reflector cannot be mounted flat. Included in the package are four distance sleeves in two different lengths. Use the distance sleeves to achieve a base separation to the wall as well as the necessary pitch for avoiding surface reflection. For further information see table 6.1.

The reflector is provided with a 2m-long connection cable for supplying with 230VAC. Connect the cable to the closest power outlet. Observe the current consumptions listed in the specifications.

Attention!

Connection work must be carried out by a certified electrician.

6.4.2 Mounting the reflector

The combination of laser measurement system and reflective tape/reflector is mounted so that the laser light spot hits the tape as centered as possible and without interruption.

For this purpose, use the alignment elements provided on the AMS 308*i*… (see chapter 5.2 "Mounting the AMS 308i"). If necessary, remove the protective foil from the reflector.

Attention!

The "TOP" label mounted on the reflectors should be aligned the same as the connections of the AMS 308*i*.

ПРОМЭЛЕКТРОНИКА / sales@prom-elec.com

Example:

If the AMS 308i is mounted so that the M12 connections are on the top, the "TOP" label of the reflector is also on the top. If the AMS 308i is mounted so that the M12 connections are on the side, the "TOP" label of the reflector is also on the side.

Notice!

The reflector must be angled. To do this, use the spacer sleeves. Angle the reflectors so that the ***surface reflections of the foil seal are deflected to the left, right or upwards****, chapter 6.4.3 gives the correct pitch with respect to the reflector size and, thus, the length of the spacers.*

Reflective tapes …-S and …-M

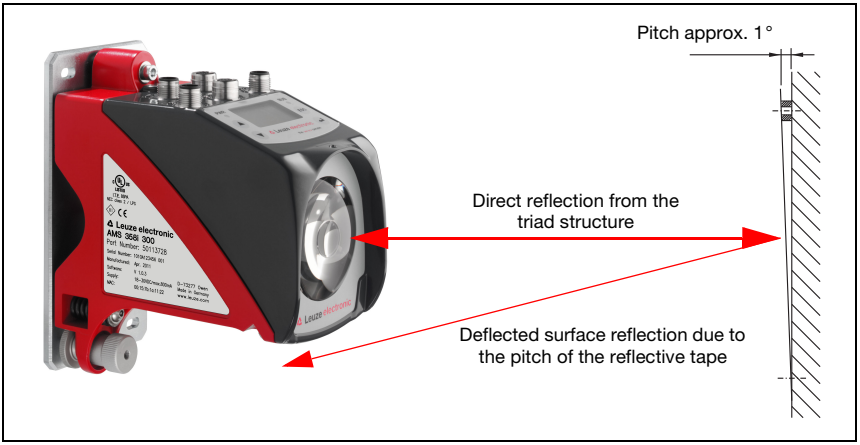

Figure 6.3: Reflector mounting

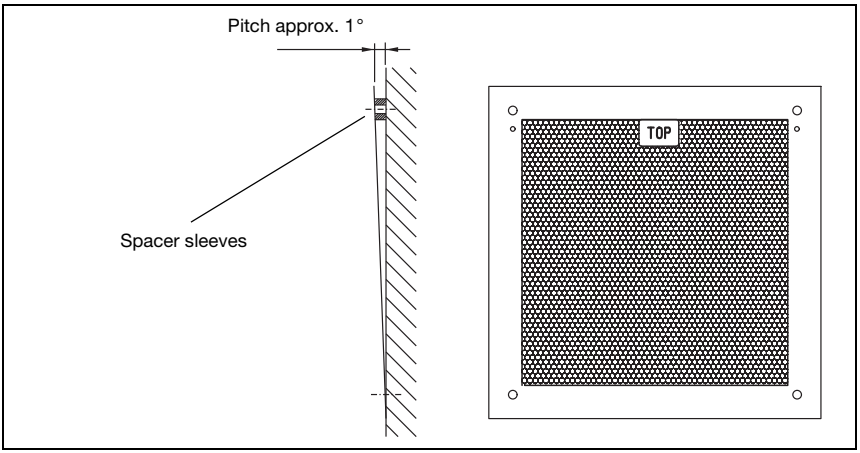

Figure 6.4: Pitch of the reflector

Reflective tapes ...-H

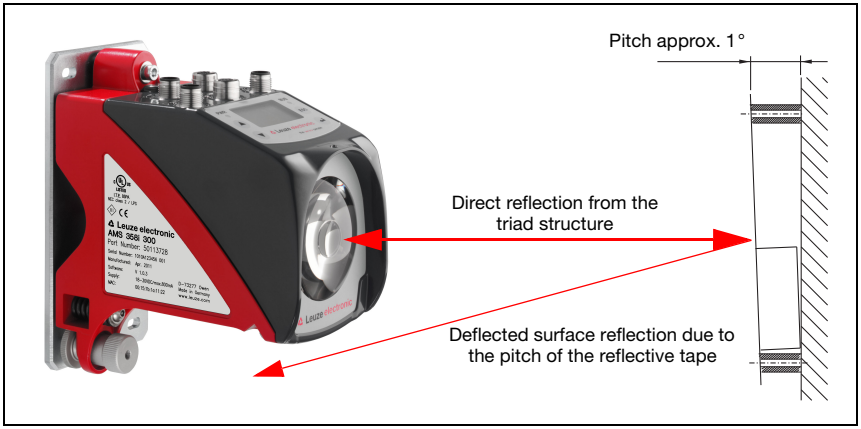

Figure 6.5: Mounting of heated reflectors

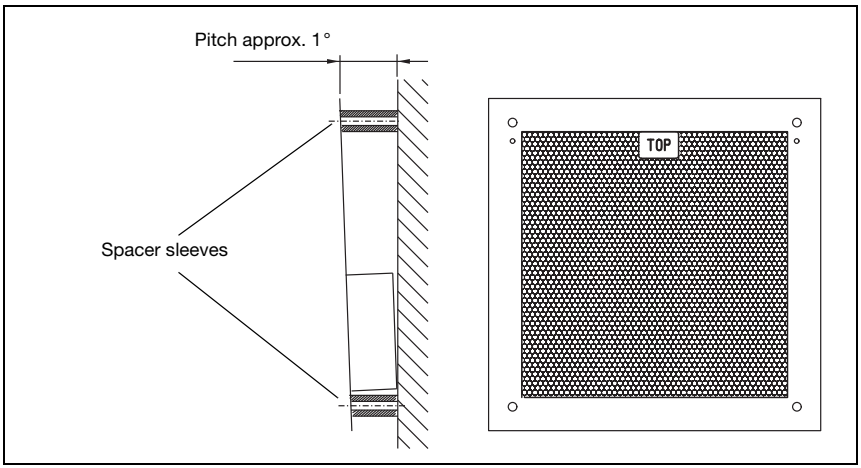

Figure 6.6: Pitch of the heated reflector

6.4.3 Table of reflector pitches

Reflector type	Pitch resulting from spacer sleeves [1]	
Reflective tape 200x200-S Reflective tape 200x200-M	**2 x 5mm**	
Reflective tape 200x200-H	**2 x 15mm**	**2 x 20mm**
Reflective tape 500x500-S Reflective tape 500x500-M	**2 x 10mm**	
Reflective tape 500x500-H	**2 x 15mm**	**2 x 25mm**
Reflective tape 749x914-S	**2 x 20mm**	
Reflective tape 914x914-S Reflective tape 914x914-M	**2 x 20mm**	
Reflective tape 914x914-H	**2 x 15mm**	**2 x 35mm**

1) Spacer sleeves are included in the delivery contents of reflective tape …-**M** and …-**H**

Table 6.1: Reflector pitch resulting from spacer sleeves

Notice!

Reliable function of the AMS 308i and, thus, max. operating range and accuracy can only be achieved with the reflective tape specified by Leuze electronic. No function can be guaranteed if other reflectors are used!

7 Electrical connection

The AMS 308*i* laser measurement systems are connected using variously coded M12 connectors. This ensures unique connection assignments.

Notice!

The corresponding mating connectors and ready-made cables are available as accessories for all cables. For further information, see chapter 11 "Type overview and accessories".

Figure 7.1: Connections of the AMS 308*i*

7.1 Safety notices for the electrical connection

Attention!

Before connecting the device, be sure that the supply voltage agrees with the value printed on the name plate.
The device may only be connected by a qualified electrician.
Ensure that the functional earth (FE) is connected correctly. Unimpaired operation is only guaranteed when the functional earth is connected properly.
If faults cannot be corrected, the device should be removed from operation and protected against possible use.

Attention!

For UL applications, use is permitted exclusively in Class 2 circuits according to NEC (National Electric Code).

The laser measurement systems are designed in accordance with safety class III for supply by PELV (protective extra-low voltage with reliable disconnection).

Notice!

Protection class IP65 is achieved only if the connectors and caps are screwed into place!

Described in detail in the following are the individual connections and pin assignments.

7.2 PWR – voltage supply / switching input/output

PWR (5-pin plug, A-coded)			
PWR	**Pin**	**Name**	**Remark**
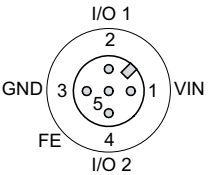	1	VIN	Positive supply voltage +18 … +30VDC
	2	I/O 1	Switching input/output 1
	3	GND	Negative supply voltage 0VDC
	4	I/O 2	Switching input/output 2
	5	FE	Functional earth
M12 plug (A-coded)	Thread	FE	Functional earth (housing)

Table 7.1: Pin assignment PWR

Further information on configuring the input/output can be found in chapter 8 and chapter 9.

7.3 Ethernet TCP/IP BUS IN

BUS IN (4-pin socket, D-coded)			
BUS IN	**Pin**	**Name**	**Remark**
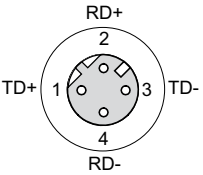	1	TD+	Transmit Data +
	2	RD+	Receive Data +
	3	TD-	Transmit Data -
	4	RD-	Receive Data -
M12 socket (D-coded)	Thread	FE	Functional earth (housing)

Table 7.2: Pin assignments for BUS IN

7.4 Ethernet TCP/IP BUS OUT

BUS OUT (4-pin socket, D-coded)			
BUS OUT 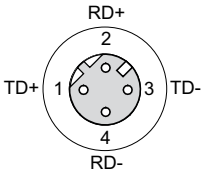 **M12 socket (D-coded)**	**Pin**	**Name**	**Remark**
	1	TD+	Transmit Data +
	2	RD+	Receive Data +
	3	TD-	Transmit Data -
	4	RD-	Receive Data -
	Thread	FE	Functional earth (housing)

Table 7.3: Pin assignment BUS OUT

7.5 Service

Service (5-pin socket, A-coded)			
SERVICE 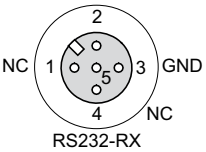 **M12 socket (A-coded)**	**Pin**	**Name**	**Remark**
	1	NC	Not used
	2	RS232-TX	Transmission line RS 232/service data
	3	GND	Voltage supply 0VDC
	4	RS232-RX	Receiving line RS 232/service data
	5	NC	Not used
	Thread	FE	Functional earth (housing)

Table 7.4: Service pin assignments

Notice!

The service interface is designed only for use by Leuze electronic!

8 Display and control panel AMS 308*i*

8.1 Structure of the control panel

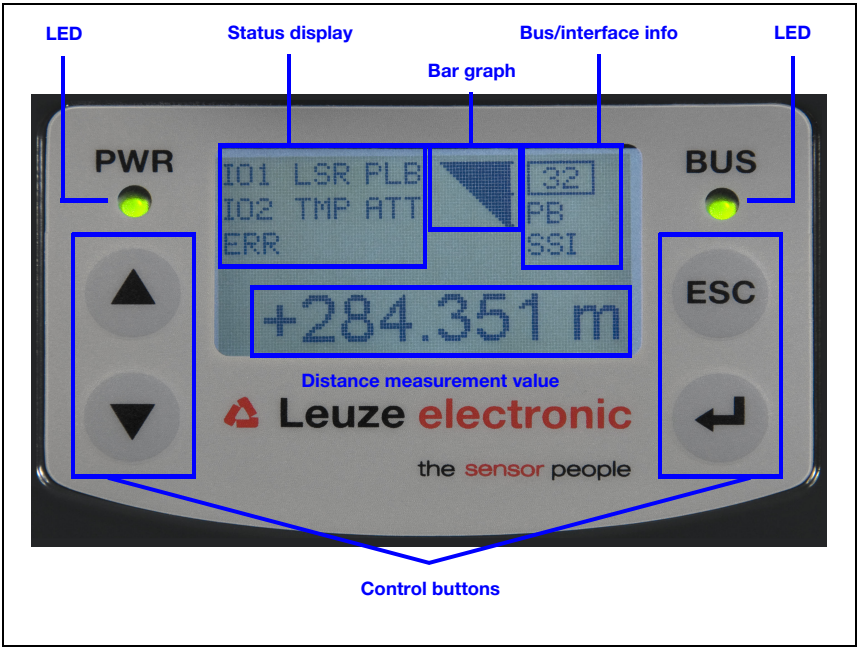

Figure 8.1: Structure of the control panel using the AMS 304*i* PROFIBUS device variant as an example

Notice!

The figure is for illustration purposes only and does not correspond to AMS 308i with respect to bus/interface info.

8.2 Status display and operation

8.2.1 Indicators in the display

Status and warning messages in the display

IO1 **Input 1 or output 1 active:**
Function depending on configuration.

IO2 **Input 2 or output 2 active:**
Function depending on configuration.

LSR **Warning - laser prefailure message:**
Laser diode old, device still functional, exchange or have repaired.

TMP **Warning - temperature monitoring:**
Permissible internal device temperature exceeded / not met.

PLB **Plausibility error:**
Implausible measurement value. Possible causes: light beam interruption, outside of measurement range, permissible internal device temperature considerably exceeded or traverse rate >10m/s.

Depending on the configuration, either zero or the last valid measurement value is output at the interfaces.

ATT **Warning received signal:**
Laser outlet window or reflector soiled or fogged by rain, water vapor or fog. Clean or dry surfaces.

ERR **Internal hardware error:**
The device must be sent in for inspection.

Bar graph

Indicates the **strength of the received laser light**.

The center bar represents the **ATT** warning threshold. The distance value remains valid and is output at the interfaces.

If no bar graph is available, the **PLB** status information appears at the same time.

The measurement value has thus been assessed as being implausible. Depending on the configuration, either zero or the last valid measurement value is output at the interfaces.

Interface info

With "LNK0", the display indicates correct hardware connection on the BUS IN connector, and, with "LNK1", correct hardware connection on the BUS OUT connector.

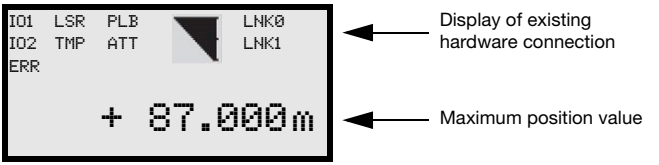

Maximum position value

The measured position value is displayed in the configured unit of measurement.

+87.000m With the **metric** setting, the measurement value is always displayed in meters with **three decimal places**.

+87.0in With the **inch** setting, the measurement value is always displayed in inches with **one decimal place**.

8.2.2 LED status displays

PWR LED

PWR	**Off**	**Device OFF** - No supply voltage
PWR	**Flashing green**	**Power LED flashes green** - No measurement value output - Voltage connected - Self test running - Initialization running - Boot process running
PWR	**Green continuous light**	**Power LED green** - AMS 308*i* ok - Measurement value output - Self test successfully finished - Device monitoring active
PWR	**Red flashing**	**Power LED flashes red** - Device ok but warning message (ATT, TMP, LSR) set in display - Light beam interruption - Plausibility error (PLB)
PWR	**Red continuous light**	**Power LED red** - No measurement value output; for details, see Display

BUS LED

BUS	**Off**	**BUS LED off** - No voltage supply - TCP communication deactivated
BUS	**Flashing green**	**BUS LED flashes green** - Address assignment via DHCP activated, however the device has not been assigned an IP address. In this case, the device with the permanently set address goes on the network

BUS

Green continuous light **BUS LED green**

- TCP communication is activated, and a connection to another participant exists.

BUS

Red continuous light **LED red**

- TCP communication is activated, however NO connection to another participant exists.

Notice!

Communication via UDP does not control the BUS LED!

-

LINK LED for BUS IN and BUS OUT

A green/yellow multicolor LED below the BUS IN and BUS OUT connectors indicates the Ethernet connection status.

Green continuous light **LINK LED on**

- The link exists, the hardware connection to the next connected participant is OK.

Flashing yellow **LINK LED flashes yellow**

- Data is exchanged with the connected participants.

8.2.3 Control buttons

▲	**Up**	Navigate upward/laterally.
▼	**Down**	Navigate downward/laterally.
ESC	**ESC**	Exit menu item.
↵	**ENTER**	Confirm/enter value, change menu levels.

Navigating within the menus

The menus within a level are selected with the up/down buttons ▲ ▼.

The selected menu item is activated with the enter button ↵.
Press the ESC button ESC to move up one menu level.
When one of the buttons is actuated, the display illumination is activated for 10 min.

Setting values

If input of a value is possible, the display looks like this:

```
100
        <-I0123456789  save
    Default ---------------- unit
126          |    |
```

← + ↵	Delete character
0...9 + ↵	Enter digit
save + ↵	Save

Use the ▲ ▼ and ↵ buttons to set the desired value. An accidental, incorrect entry can be corrected by selecting <-I and then pressing ↵.
Then use the ▲ ▼ buttons to select Save and save the set value by pressing ↵.

Selecting options

If options can be selected, the display looks like this:

```
o OFF
  ON
   Default ---------------- unit
  OFF        |    |
```

Select the desired option with the ▲ ▼ buttons. Activate the option by pressing ↵.

8.3 Menu description

8.3.1 The main menus

After voltage has been applied to the laser, device information is displayed for several seconds. The display then shows the measurement window with all status information.

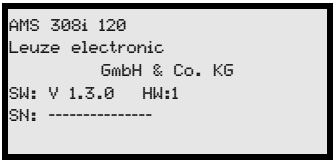

Device information - main menu

This menu item contains detailed information on
- Device model,
- Manufacturer,
- Software and hardware version,
- Serial number.

No entries can be made via the display.

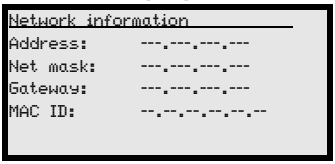

Network information - main menu

- Display of the network settings.

No entries can be made via the display.

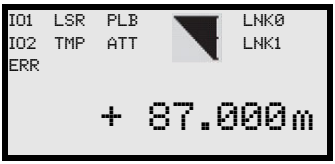

Status and measurement data - main menu

- Display of status-, warning-, and error messages
- Status overview of the switching inputs/outputs.
- Bar graph for the reception level.
- Link.
- Measurement value.

No entries can be made via the display.
See "Indicators in the display" on page 41.

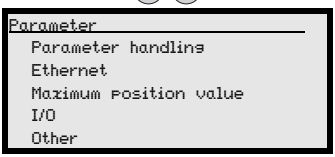

Parameter - main menu

- Configuration of the AMS.

See "Parameter menu" on page 47.

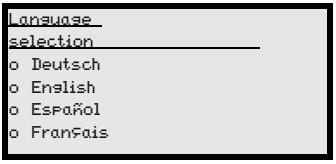

Language selection - main menu

- Selection of the display language.

See "Language selection menu" on page 52.

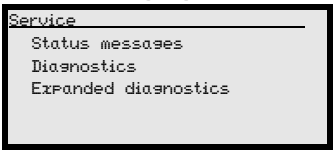

Service - main menu

- Display of status messages.
- Display of diagnostic data.

No entries can be made via the display.
See "Service menu" on page 52.

Notice!

***The rear cover** of this manual includes a **fold-out page** with the complete **menu structure**. It describes the menu items in brief.*

8.3.2 Parameter menu

Parameter handling submenu

The following functions can be called up in the Parameter handling submenu:

- Lock and enable parameter entry
- Set up a password
- Reset the AMS 308*i* to default settings.

Table 8.1: Parameter handling submenu

Level 3	Level 4	Level 5	Selection/configuration option Description	Standard
Parameter enabling			ON / OFF The standard setting (OFF) prevents unintended parameter changes. With parameter enabling activated (ON), the display is inverted. In this state, it is possible to change parameters manually.	OFF
Password	Activate password		ON / OFF To enter a password, parameter enabling must be activated. If a password is assigned, changes to the AMS 308*i* can only be made after the password is entered. The master password 2301 bridges the individually set password.	OFF
	Password entry		Configuration option of a four-digit numerical password	
Parameters to default			By pressing the enter button ↵ after selecting Parameters to default, all parameters are reset to their standard settings without any further security prompts. In this case, English is selected as the display language.	

Additional important information on parameter handling can be found at the end of the chapter.

Ethernet submenu

Table 8.2: Ethernet submenu

Level 3	Level 4	Level 5	Level 6	Selection/configuration option Description	Standard
Ethernet interface	Address			The IP address can be set to any value in ---.---.---.--- format. Normally, the network administrator specifies the IP address that is to be set here. If DHCP is activated, the setting made here has no effect and the AMS 308*i* is set to the values that it obtains from the DHCP server.	
	Gateway			The gateway address can be set to any value in ---.---.---.--- format. The AMS 308*i* communicates with participants in other subnets via the gateway.	
	Net mask			The net mask can be set to any value in ---.---.---.--- format.	
	DHCP activated			ON / OFF If DHCP is activated, the AMS 308*i* draws its settings for IP address, gateway and net mask from a DHCP server. The manual settings made above have no effect.	OFF
HOST communication	TCP/IP	Activation		ON / OFF TCP/IP communication with the host is activated.	ON
		Mode		Server/client `Server` defines the AMS 308*i* as TCP server: The primary host system (PC / PLC as client) actively establishes the connection and the connected AMS 308*i* waits for the connection to be set up. Under `TcPIP Server -> Port number`, you must also specify on which local port the AMS 308*i* accepts communication requests from a client application (host system). `Client` defines the AMS 308*i* as TCP client: The AMS 308*i* actively establishes the connection to the primary host system (PC / PLC as server). Under `TcPIP Client`, you must also specify the IP address of the server (host system) and the port number on which the server (host system) accepts a connection. In this case, the AMS 308*i* now determines when and with whom a connection is established!	Server
		Keep Alive Interval		So that the device can determine whether the connection to the host still exists, cyclical keep-alive messages are sent which are answered by the host. This parameter defines the time interval [ms] in which the keep-alive messages are sent. Value 0 deactivates the sending of das keep-alive messages.	2000
		TCP/IP Client	IP address	The IP address can be set to any value in ---.---.---.--- format. IP address of the host system with which the AMS 308*i* exchanges data as TCP client.	
			Port number	The port number can be set to any value between 0 and 65535. Port number of the host system with which the AMS 308*i* exchanges data as TCP client.	10000
			Timeout	The timeout can be set to any value between 100 and 60,000 ms. Time after which an attempt to establish a connection is automatically interrupted by the AMS 308*i* if the server (host system) does not respond.	1000

Table 8.2: Ethernet submenu

Level 3	Level 4	Level 5	Level 6	Selection/configuration option Description	Standard
			Repetition time	The repetition time can be set to any value between 100 and 60,000 ms. Time after which another attempt is made to establish a connection.	5000
		TCP/IP Server	Port number	The port number can be set to any value between 0 and 65535. Local port on which the AMS 308*i* accepts connection requests from a client application (host system) as TCP server.	1000
	UDP	Activation		ON / OFF Activates the connection-free UDP protocol which is suitable for e.g. transferring process data to the host. UDP and TCP/IP can be used in parallel. For network applications with changing partners or for only brief data transmissions, UDP is preferred as connection-free protocol.	OFF
		IP address		IP address of the host to which the data is to be transferred. The IP address can be set to any value in ---.---.---.--- format. Correspondingly, the host system (PC / PLC) requires the set IP address of the AMS 308*i* and the selected port number. By assigning these parameters, a socket is formed via which the data can be sent and received.	---.---.---.---
		Port number		Port number of the host to which the data is to be transferred. The port number can be set to any value between 0 and 65535.	10001
Output cycle				Value input Output cycle of data in multiples of the AMS 308*i* measurement cycle of 1.7 ms. The parameter is only valid when the cyclical transmission of the position values is selected. Cyclical transmission is selected via the protocol.	1
Position resolution				0.01 mm / 0.1 mm / 1 mm / 10 mm / free resolution The measurement value can be displayed in these resolutions. The value of the free resolution is determined in the "Position value" submenu in the "Value of free resolution" parameter.	0.1 mm
Velocity resolution				1 mm/s / 10 mm/s / 100 mm/s	1 mm/s

Position value submenu

Table 8.3: Position value submenu

Level 3	Level 4	Level 5	Selection/configuration option Description	Standard
Measurement unit			Metric/Inch Specifies the units of the measured distances	Metric

Table 8.3: Position value submenu

Level 3	Level 4	Level 5	Selection/configuration option Description	Standard
Count direction			Positive/Negative Positive: The measurement value begins at 0 and increases with increasing distance. Negative: The measurement value begins at 0 and decreases with increasing distance. Negative distance values may need to be compensated with an offset or preset.	Positive
Offset			Output value=measurement value+offset. The resolution of the offset value is independent of the selected "Resolution position" and is entered in mm or inch/100. The offset value is effective immediately following entry. If the preset value is activated, this has priority over the offset. Preset and offset are not offset against each other.	0 mm
Preset			The preset value is accepted by means of teach pulse. The teach pulse can be applied to a hardware input of the M12 PWR connector. The hardware input must be appropriately configured. See also configuration of the I/Os.	0 mm
Free resolution value			The measurement value can be resolved in increments of 1/1000 within the 5 … 50000 value range. If, e.g., a resolution of 0.875 mm per digit is required, the parameter is set to 875.	1000
Error delay			ON / OFF Specifies whether, in the event of an error, the position value immediately outputs the value of the "Position value in the case of error" parameter or the last valid position value for the configured error delay time.	ON/100 ms
Position value in the case of error			Last valid value / zero Specifies which position value is output after the error delay time elapses.	Zero

I/O submenu

Table 8.4: I/O submenu

Level 3	Level 4	Level 5	Selection/configuration option Description	Standard
I/O 1	Port configuration		Input/Output Defines whether I/O 1 functions as an output or input.	Output
	Switching input	Function	No function/preset teach/laser ON/OFF	No function
		Activation	Low active/High active	Low active
	Switching output	Function	Pos. limit value 1 / Pos. limit value 2 / Velocity / Intensity (ATT) / Temp. (TMP) / Laser (LSR) / Plausibility (PLB) / Hardware (ERR) The individual functions are "ORed" on the selected switching output.	Plausibility (PLB), hardware (ERR)
		Activation	Low active/High active	Low active
I/O 2	Port configuration		Input/Output Defines whether I/O 2 functions as an output or input.	Output
	Switching input	Function	No function/preset teach/laser ON/OFF	No function
		Activation	Low active/High active	Low active

Table 8.4: I/O submenu

Level 3	Level 4	Level 5	Selection/configuration option Description	Standard
	Switching output	Function	Pos. limit value 1 / Pos. limit value 2 / Velocity / Intensity (ATT) / Temp. (TMP) / Laser (LSR) / Plausibility (PLB) / Hardware (ERR) The individual functions are "ORed" on the selected switching output.	Intensity (ATT), Temp. (TMP), Laser (LSR)
		Activation	Low active/High active	Low active
Limit values	Upper pos. limit 1	Activation	ON / OFF	OFF
		Limit value input	Value input in mm or inch/100	0
	Lower pos. limit 1	Activation	ON / OFF	OFF
		Limit value input	Value input in mm or inch/100	0
	Upper pos. limit 2	Activation	ON / OFF	OFF
		Limit value input	Value input in mm or inch/100	0
	Lower pos. limit 2	Activation	ON / OFF	OFF
		Limit value input	Value input in mm or inch/100	0
	Max. velocity	Activation	ON / OFF	OFF
		Max. velocity	Value input in mm/s or inch/100s	0

Other submenu

Table 8.5: Other submenu

Level 3	Level 4	Level 5	Selection/configuration option Description	Standard
Heating control			Standard (10° C … 15° C)/Extended (30° C … 35°) Defines a switch-on/switch-off range for the heating control. The extended switch-on/switch-off range for heating may provide relief in the event of condensation problems. There is no guarantee that no condensation will occur on the optics in the extended switch-on/switch-off range due to the limited heating capacity. This parameter is available as standard, but functions only for devices with integrated heating (AMS 308*i*… **H**).	Standard
Display illumination			10 minutes/ON Display illumination is switched off after 10 minutes or, if the parameter is set to "ON", illumination is always on.	10 min.
Display contrast			Weak/Medium/Strong The display contrast may change at extreme temperature values. The contrast can subsequently be adapted using the three levels.	Medium
Service RS232	Baud rate		57.6 kbit/s / 115.2 kbit/s The service interface is only available to Leuze internally.	115.2 kbit/s

Table 8.5: Other submenu

Level 3	Level 4	Level 5	Selection/configuration option Description	Standard
	Format		8,e,1 / 8,n,1 The service interface is only available to Leuze internally.	8,n,1

8.3.3 Language selection menu

```
Language
selection
o Deutsch
● English
o Español
o Français
```

There are 5 display languages available:

- German
- English
- Spanish
- French
- Italian

The AMS 308*i* is delivered from the factory with the display preset to English.

To change the language, no password needs to be entered nor must password enabling be activated. The display language is a passive operational control and is, thus, not a function parameter, per se.

8.3.4 Service menu

```
Service
 Status messages
 Diagnostics
 Expanded diagnostics
```

A more detailed description of the individual functions can be found in chapter 10.

8.4 Operation

Described here is an operating process using parameter enabling as an example.

Parameter enabling

During normal operation parameters can only be viewed. If parameters are to be changed, the `ON` menu item in the `Parameter -> Parameter handling -> Parameter enable` menu must be activated. To do this, proceed as follows:

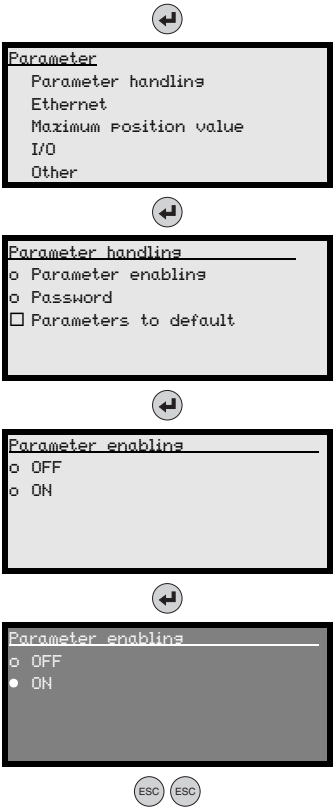

In the main menu, press the enter button to enter the Parameter menu.

Use the ▲ ▼ buttons to select the Parameter handling menu item.

Press the enter button to enter the Parameter handling menu.

In the Parameter handling menu, use the ▲ ▼ buttons to select the Parameter enabling menu item.

Press the enter button to enter the Parameter enabling menu.

In the Parameter enabling menu, use the ▲ ▼ buttons to select the ON menu item.

Press the enter button to switch on parameter enabling.

The PWR LED illuminates orange; the display is inverted. You can now set the individual parameters on the display.

Press the ESC button twice to return to the Parameter menu.

Viewing and editing parameters

As long as parameter enabling is activated, the entire AMS 308*i* display is inverted.

Notice!

If a password was stored, parameter enabling is not possible until this password is entered, see "Password for parameter enabling" below.

Password for parameter enabling

Notice!

*The **master password 2301** can enable the AMS 308i at any time.*

9 Ethernet TCP/IP interface

9.1 General information on Ethernet

The AMS 308*i* is designed as an Ethernet device (acc. to IEEE 802.3) with a standard baud rate of 10/100 Mbit/s. A fixed MAC ID is assigned to each AMS 308*i* by the manufacturer; this ID cannot be changed.

The AMS 308*i* automatically supports the transmission rates of 10 Mbit/s (10Base T) and 100 Mbit/s (100Base TX), as well as auto-negotiation and auto-crossover.

The AMS 308*i* features multiple M12 connectors / sockets for the electrical connection of the supply voltage, the interface and the switching inputs and outputs. Additional information on the electrical connection can be found in chapter 7.

The AMS 308*i* supports the following protocols and services:

- TCP / IP (Client / Server)
- UDP
- DHCP
- ARP
- PING

For communication with the primary host system, the corresponding TCP/IP protocol (client/server mode) or UDP must be selected.

Further information on commissioning can be found in chapter 9.

9.1.1 Ethernet – star topology

The AMS 308*i* can be operated as a single device (standalone) in an Ethernet star topology with individual IP address.

The IP address can either be assigned via the display or dynamically via a DHCP server.

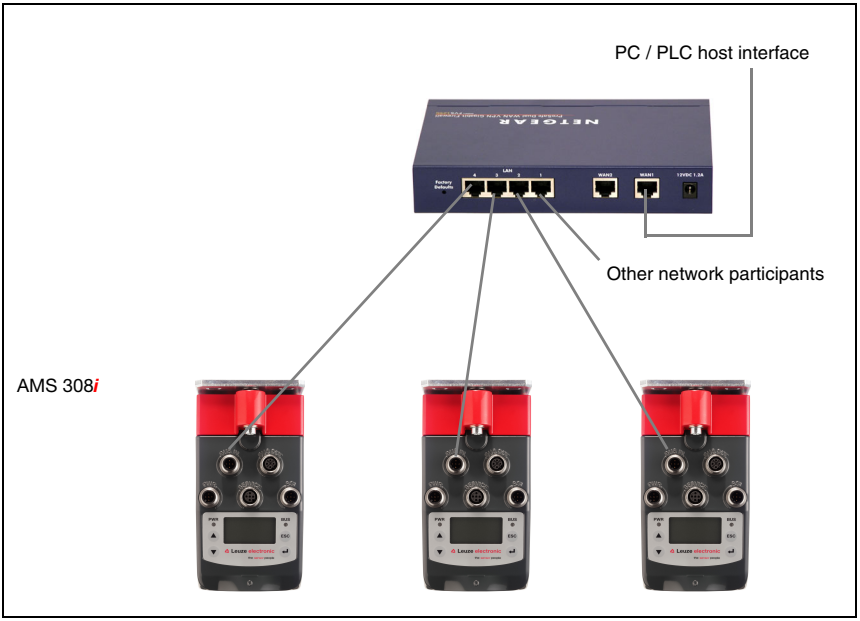

Figure 9.1: Ethernet with star topology

9.1.2 Ethernet with linear topology

The innovative further development of the AMS 308*i* with integrated switch functionality offers the option of connecting multiple AMS of type AMS 308*i* to one another without direct connection to a switch. In addition to the classic "star topology", a "linear topology" is thus also possible.

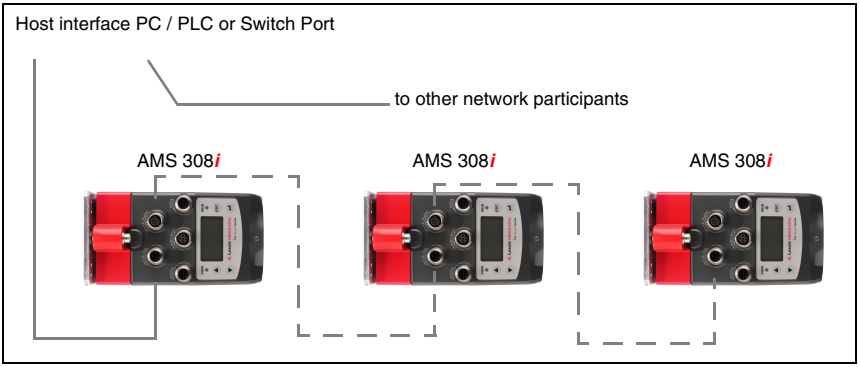

Figure 9.2: Ethernet – linear topology

Each participant in this network requires its own unique IP address which must be assigned to it via the display. Alternatively, the DHCP process can be used.

The maximum length of a segment is limited to 100 m.

9.2 Electrical connection of the

BUS IN (4-pin socket, D-coded)		
Pin	**Name**	**Remark**
1	TD+	Transmit Data +
2	RD+	Receive Data +
3	TD-	Transmit Data -
4	RD-	Receive Data -
Thread	FE	Functional earth (housing)

BUS OUT (4-pin socket, D-coded)		
Pin	**Name**	**Remark**
1	TD+	Transmit Data +
2	RD+	Receive Data +
3	TD-	Transmit Data -
4	RD-	Receive Data -
Thread	FE	Functional earth (housing)

Figure 9.3: Ethernet - Electrical connection

Notice!

*For contacting **BUS IN** and **BUS OUT**, we recommend our ready-made Ethernet cable (see chapter 11.4.5 "Accessory ready-made cables for Ethernet").*

To set up an Ethernet network with other participants with linear topology, the AMS 308*i* makes available another Ethernet interface. The use of this interface reduces the cabling requirements, as only the first AMS 308*i* requires a direct connection to the switch. All other participants can be connected in series to the first AMS 308*i*, see figure 9.2.

If you use user-configurable cables, note the following:

Notice!

The entire connection cable must be shielded. The shielding connection must be at the same potential on both ends of the data line. This prevents potential compensating currents over the shield and possible interference coupling by compensating currents. The signal lines must be stranded in pairs.
Use CAT 5 cable for the connection.

Notice!

The termination at the end of a linear typology (AMS 308i last participant) is automatically carried out via the integrated TCP/IP controller. External termination via the BUS OUT connection is not necessary.

9.3 Ethernet - Commissioning of the AMS 308i

9.3.1 Manually setting the IP address

Notice!

To set the network addresses, parameter enabling must be activated, as described in chapter 8.4.

If your system does not include a DHCP server or if the IP addresses of the devices are to be set permanently, proceed as follows:

- *Have the network administrator specify the data for IP address, net mask and gateway address of the AMS 308i.*
- *Set these values on the AMS 308i.*

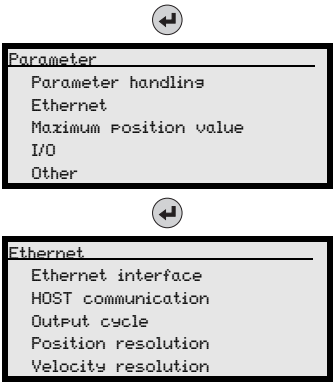

In the main menu, press the enter button to enter the Parameter menu.

Use the ▲ ▼ buttons to select the Ethernet menu item.

Press the enter button to enter the Ethernet menu.

Use the ▲ ▼ buttons to select the Ethernet interface menu item.

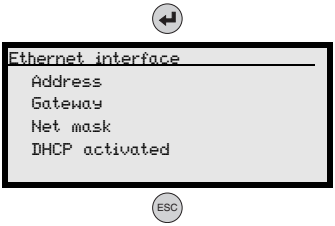

Press the enter button to enter the Ethernet menu.

Use the ▲ ▼ buttons to successively select the Address, Gateway and Net mask menu items and set the desired values.

Exit the Ethernet menu with the ESCAPE button.

9.3.2 Automatically setting the IP address

If your system includes a DHCP server that is to be used to assign the IP addresses, observe the following:

DHCP address assignment is deactivated by default. To activate DHCP address assignment, parameter enabling must first be activated, see chapter 8.4.

↳ *From the main menu, navigate as described in section 9.3.1 with the ▲ ▼ buttons and the enter button ↵ to the Ethernet interface menu:*

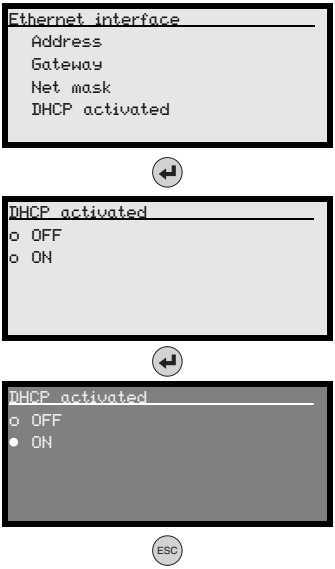

Use the ▲ ▼ buttons to select the DHCP activated menu item.

Press the enter button to enter the DHCP activated menu.

Use the ▲ ▼ buttons to select the ON menu item.

Press the enter button to switch on DHCP activation.

DHCP activation is now switched on.

Exit the Ethernet interface menu with the ESCAPE button.

9.4 Communication protocol (Leuze binary protocol via TCP/IP)

The Leuze binary protocol is integrated in the user data area within the TCP/IP or UDP communication.

9.4.1 Query telegram on the AMS 308*i*

ETHERNET HEADER (Ethernet addresses)	IP HEADER (IP addresses)	TCP HEADER (Port numbers)	TCP USER DATA AREA	FCS

TCP user data area

The Leuze binary protocol has a proprietary header. This is an integral part of the user data and has the following functions:

- **Transaction ID**
  The transaction ID enables the unique assignment of a query telegram to the AMS 308*i* to its answer.
  A transaction ID is entered into the query telegram; this ID is also used in the answer telegram. By simply increasing the transaction ID, continuous processing, for example, can be ensured.
- **Protocol ID**
  The identifier (0x4C31) is defined as the protocol ID for the AMS 308*i* binary protocol. The protocol ID remains unchanged for the binary protocol.
- **Length**
  The number of the following user data bytes is entered. The TCP user data area is 2 bytes long in the case of a query telegram, and 6 or 8 bytes long in the answer telegram, depending on the command.
- **0xFF**
  Reserve byte with entry 0xFF.

Transaction ID (16Bit)	Protocol ID (16Bit)	Length (16Bit)	0xFF (8Bit)	Function code (8Bit)

Function code

Via the function code, the functions on the AMS 308*i* described in the table below can be activated.

Byte value		Function
Hex	Dec	
0xF1	241	Transfer single position value
0xF2	242	Start cyclical transmission of the position value
0xF3	243	Stop cyclical transfer
0xF4	244	Laser on
0xF5	245	Laser off

Table 9.1: Functions

0xF6	246	Transfer single speed value
0xF7	247	Start cyclical transmission of the velocity value
0xF8	248	Transfer single position and velocity value

Table 9.1: Functions

Example: Transfer single position value

- **Transaction ID (16Bit):**
  Value between 0x0000 and 0xFFFF
- **Protocol ID (16Bit):**
  Always 0x4C31
- **Length (16Bit):**
  Always 0x0002
- **0xFF (8Bit):**
  Always 0xFF
- **Function code (8Bit):**
  0xF1 (value depending on the function between 0xF1 and 0xF8)

9.4.2 Answer telegram of the AMS 308*i*

ETHERNET HEADER (Ethernet addresses)	IP HEADER (IP addresses)	TCP HEADER (Port numbers)	TCP USER DATA AREA	FCS

9.4.2.4 TCP user data area

Transaction ID (16Bit)	Protocol ID (16Bit)	Length (16Bit)	0xFF (8Bit)	Status (16Bit)	Data (24Bit)

Answer telegram for the F1 to F7 function code

Byte	Bit 7	Bit 6	Bit 5	Bit 4	Bit 3	Bit 2	Bit 1	Bit 0
0	0	LASER	IO2	IO1	0	0	0	0
1	READY	LSR	TMP	ERR	ATT	PLB	OVFL	SIGN
2	D23	D22	D21	D20	D19	D18	D17	D16
3	D15	D14	D13	D12	D11	D10	D9	D8
4	D7	D6	D5	D4	D3	D2	D1	D0

Table 9.2: Answer telegram

Laser (control)

0 = laser ON
1 = laser OFF

IO1

0 = signal level inactive
1 = signal level active

IO2

0 = signal level inactive
1 = signal level active

Ready

0 = AMS not ready
1 = AMS ready

LSR (prefailure message laser)

0 = ok
1 = laser warning

TMP (temperature warning)

0 = ok
1 = temperature limits exceeded or not met

ERR (hardware error)

0 = no error
1 = hardware error

ATT (evaluation/warning received signal level)

0 = received signal level ok
1 = warning received signal level

PLB (plausibility of the measurement values)

0 = measurement values ok
1 = implausible measurement value

OVFL (overflow; measurement value larger than 24bit)

0 = ok
1 = overflow

Sign (sign of the measurement value)

0 = positive
1 = negative

D0 - D23 (distance value)

D0 = LSB; D23 = MSB

10 Diagnostics and troubleshooting

10.1 Service and diagnostics in the display of the AMS 308*i*

In the main menu of the AMS 308*i*, expanded "Diagnostics" can be called up under the Service heading.

```
Service
 Status messages
 Diagnostics
 Expanded diagnostics
```

From the Service main menu, press the enter button ↵ to access the underlying menu level.

Use the up/down buttons ▲ ▼ to select the corresponding menu item in the selected level; use the enter button ↵ to activate the selection.

Return from any sub-level to the next-higher menu item by pressing the ESC button ESC.

10.1.1 Status messages

The status messages are written in a ring memory with 25 positions. The ring memory is organized according to the FIFO principle. No separate activation is necessary for storing the status messages. Power OFF clears the ring memory.

```
Status messages
1: - / - / -
2: - / - / -
3: - / - / -
```

Basic representation of the status messages

n: Type / No. / 1

Meaning:

n:	memory position in the ring memory
Type:	type of message: **I** = info, **W** = warning, **E** = error, **F** = severe system error
No:	internal error detection
1:	frequency of the event (always "1", since no summation occurs)

The status messages within the ring memory are selected with the up/down buttons ▲ ▼. The enter button ↵ can be used to call up **detailed information** on the corresponding status messages with the following details:

Detailed information about a status message

Type: type of message + internal counter

UID: Leuze internal coding of the message

ID: description of the message

Info: not currently used

Within the detailed information, the enter button ↵ can be pressed again to activate an **action menu** with the following functions:

- Acknowledge message
- Delete message
- Acknowledge all
- Delete all

10.1.2 Diagnostics

The diagnostics function is activated by selecting the `Diagnostics` menu item. The ESC button (ESC) deactivates the diagnostics function and clears the contents of the recordings.

The recorded diagnostic data are displayed in 2 fields. In the upper half of the display, status messages of the AMS and the bar graph are displayed. The lower half contains information that assists in a Leuze-internal evaluation.

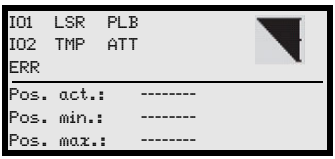

Use the up/down buttons (▲) (▼) to scroll in the bottom half between various displays. The contents of the scrollable pages are intended solely for Leuze for internal evaluation.

The diagnostics have no influence on the communication to the host interface and can be activated during operation of the AMS 308*i*.

10.1.3 Expanded diagnostics

The `Expanded diagnostics` menu item is used for Leuze-internal evaluation.

10.2 General causes of errors

LINK LED for BUS IN and BUS OUT

A green/yellow multicolor LED below the BUS IN and BUS OUT connectors indicates the Ethernet connection status.

	Green continuous light	**Power LINK green** - The link exists, the hardware connection to the next connected participant is OK.
	Off	**LINK LED off** - No Ethernet communication. Possible cause: No correct Ethernet connection to the AMS. Trouble shooting: exchange Ethernet cable or check PIN assignment on the RJ45 connector.
	Flashing yellow	**LINK LED flashes yellow** - Data is exchanged with the connected participants.

10.2.1 Power LED

See also chapter 8.2.2.

Error	Possible error cause	Measure
PWR LED "OFF"	No supply voltage connected	Check supply voltage.
	Hardware error	Send in device.
PWR-LED "flashes red"	Light beam interruption	Check alignment.
	Plausibility error	Traverse rate >10m/s.
PWR-LED "static red"	Hardware error	For error description, see display, It may be necessary to send in the device.

Table 10.1: General causes of errors

10.3 Interface errors

10.3.1 BUS LED

Error	Possible error cause	Measure
BUS LED "OFF"	No supply voltage connected to the device	Check supply voltage.
	TCP communication deactivated	Activate TCP communication.
BUS-LED "flashes green"	Address assignment via DHCP activated, but no IP address assigned In this case, the device with the permanently set address goes on the network	Assign IP address.
BUS LED "static red"	TCP communication is activated, but NO connection to another participant	
Sporadic network error	Check wiring for proper contacting	Check wiring, • In particular, check wire shielding. • Check wires used.
	EMC coupling	• Observe contact quality of screwed or soldered contacts in the wiring. • Avoid EMC coupling caused by power cables laid parallel to device lines. • Separate laying of power and data communications cables.
	Network expansion exceeded	Check max. network expansion as a function of the max. cable lengths.

Table 10.2: Bus error

10.4 Status display in the display of the AMS 308*i*

Display	Possible error cause	Measure
PLB (implausible measurement values)	Laser beam interruption	Laser spot must always be incident on the reflector.
	Laser spot outside of reflector	Traverse rate < 10m/s?
	Measurement range for maximum distance exceeded	Restrict traversing path or select AMS with larger measurement range.
	Velocity greater than 10m/s	Reduce velocity.
	Ambient temperature far outside of the permissible range (TMP display; PLB)	Select AMS with heating or ensure cooling.

Display	Possible error cause	Measure
ATT (insufficient received signal level)	Reflector soiled	Clean reflector or glass lens.
	Glass lens of the AMS soiled	
	Performance reduction due to snow, rain, fog, condensing vapor, or heavily polluted air (oil mist, dust)	Optimize usage conditions.
	Laser spot only partially on the reflector	Check alignment.
	Protective foil on the reflector	Remove protective foil from reflector.
TMP (operating temperature outside of specification)	Ambient temperatures outside of the specified range	In case of low temperatures, remedy may be an AMS with heating. If temperatures are too high, provide cooling or change mounting location.
LSR Laser diode warning	Laser diode prefailure message	Send in device at next possible opportunity to have laser diode replaced. Have replacement device ready.
ERR Hardware error.	Indicates an uncorrectable error in the hardware	Send in device for repair.

Notice!

*Please use **chapter 10 as a master copy** should servicing be required.*
Cross the items in the "Measures" column which you have already examined, fill out the following address field and fax the pages together with your service contract to the fax number listed below.

Customer data (please complete)

Device type:	
Company:	
Contact partner / department:	
Phone (direct):	
Fax:	
Street / No:	
ZIP code/City:	
Country:	

Leuze Service fax number:

+49 7021 573 - 199

11 Type overview and accessories

11.1 Type key

AMS 3xx *i* yyy H

Heating option	H =	With heating
Sensing distance	40	Max. operating range in m
	120	Max. operating range in m
	200	Max. operating range in m
	300	Max. operating range in m
	i =	Integrated fieldbus technology
Interface	00	RS 422/RS 232
	01	RS 485
	04	PROFIBUS DP / SSI
	08	TCP/IP
	35	CANopen
	38	EtherCAT
	48	PROFINET RT
	55	DeviceNet
	58	Ethernet/IP
	84	Interbus
	AMS	**A**bsolute **M**easuring **S**ystem

11.2 Type overview AMS 308*i* (Ethernet TCP/IP)

Type designation	Description	Part no.
AMS 308*i* 40	40 m operating range, Ethernet TCP/IP interface	50113685
AMS 308*i* 120	120 m operating range, Ethernet TCP/IP interface	50113686
AMS 308*i* 200	200 m operating range, Ethernet TCP/IP interface	50113687
AMS 308*i* 300	300 m operating range, Ethernet TCP/IP interface	50113688
AMS 308*i* 40 H	40 m operating range, Ethernet TCP/IP interface, integrated heating	50113689
AMS 308*i* 120 H	120 m operating range, Ethernet TCP/IP interface, integrated heating	50113690
AMS 308*i* 200 H	200 m operating range, Ethernet TCP/IP interface, integrated heating	50113691
AMS 308*i* 300 H	300 m operating range, Ethernet TCP/IP interface, integrated heating	50113692

Table 11.1: Type overview AMS 308*i*

11.3 Overview of reflector types

Type designation	Description	Part no.
Reflective tape 200x200-S	Reflective tape, 200x200mm, self-adhesive	50104361
Reflective tape 500x500-S	Reflective tape, 500x500mm, self-adhesive	50104362
Reflective tape 914x914-S	Reflective tape, 914x914mm, self-adhesive	50108988
Reflective tape 200x200-M	Reflective tape, 200x200mm, affixed to aluminum plate	50104364
Reflective tape 500x500-M	Reflective tape, 500x500mm, affixed to aluminum plate	50104365
Reflective tape 914x914-M	Reflective tape, 914x914mm, affixed to aluminum plate	50104366
Reflective tape 200x200-H	Heated reflective tape, 200 x 200mm	50115020
Reflective tape 500x500-H	Heated reflective tape, 500 x 500mm	50115021
Reflective tape 914x914-H	Heated reflective tape, 914 x 914mm	50115022

Table 11.2: Overview of reflector types

11.4 Accessories

11.4.1 Accessory mounting bracket

Type designation	Description	Part no.
MW OMS/AMS 01	Mounting bracket for mounting the AMS 308*i* to horizontal surfaces	50107255

Table 11.3: Accessory mounting bracket

11.4.2 Accessory deflector unit

Type designation	Description	Part no.
US AMS 01	Deflector unit with integrated mounting bracket for the AMS 308*i*. Variable 90° deflection of the laser beam in various directions	50104479
US 1 OMS	Deflector unit without mounting bracket for simple 90° deflection of the laser beam	50035630

Table 11.4: Accessory deflector unit

11.4.3 Accessory M12 connector

Type designation	Description	Part no.
S-M12A-ET	M12 connector, Ethernet, D-coded, BUS IN, BUS OUT	50112155
KDS ET M12/RJ45 W - 4P	Converter from M12 D-coded to RJ45 socket	50109832
KD 095-5A	M12 connector, A-coded socket, Power (PWR)	50020501

Table 11.5: Accessory M12 connector

11.4.4 Accessory ready-made cables for voltage supply

Contact assignment/wire color of PWR connection cable

PWR connection cable (5-pin socket, A-coded)			
PWR 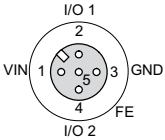 **M12 socket (A-coded)**	**Pin**	**Name**	**Core color**
	1	VIN	**brown**
	2	I/O 1	**white**
	3	GND	**blue**
	4	I/O 2	**black**
	5	FE	**gray**
	Thread	FE	**bare**

Specifications of the cables for voltage supply

Operating temperature range in rest state: -30°C … +70°C
in motion: -5°C … +70°C

Material sheathing: PVC

Bending radius > 50 mm

Order codes of the cables for voltage supply

Type designation	Description	Part no.
K-D M12A-5P-5m-PVC	M12 socket, A-coded, axial plug outlet, open cable end, cable length 5 m	50104557
K-D M12A-5P-10m-PVC	M12 socket, A-coded, axial plug outlet, open cable end, cable length 10 m	50104559

11.4.5 Accessory ready-made cables for Ethernet

General

- Cable **KB ET...** for connecting to Ethernet via M12 connector
- Standard cable available in lengths from 2 … 30m
- Special cables on request.

Contact assignments M12 Ethernet connection cable KB ET …-SA

M12 Ethernet connection cable (4-pin connector, D-coded, on both sides)			
EtherNet 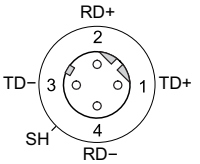 **M12 connector (D-coded)**	**Pin**	**Name**	**Core color**
	1	TD+	**yellow**
	2	RD+	**white**
	3	TD-	**orange**
	4	RD-	**blue**
	SH (thread)	FE	**bare**

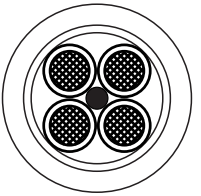

Core colors

WH
YE
BU
OG

Conductor class: VDE 0295, EN 60228, IEC 60228 (Class 5)

Accessory M12 Ethernet connection cable, open cable end

Cable designation: KB ET - … - SA

Accessory Ethernet connection cable with both-sided D-coded M12 plug

Cable designation: KB ET - … - SSA, cable assignment 1:1, not crossed

Accessory Ethernet connection cable, M12-/RJ45

Cable designation: KB ET - … - SA-RJ45

Notice for connecting the Ethernet interface!

The entire connection cable must be shielded. The shielding connection must be at the same potential on both ends of the data line. This prevents potential compensating currents over the shield and possible interference coupling by compensating currents. The signal lines must be stranded in pairs.
Use CAT 5 cable for the connection.

Specifications of the Ethernet connection cable

Operating temperature range in rest state: -50°C … +80°C
in motion: -25°C … +80°C
in motion: -25°C … +60°C (when used with drag chains)

Material cable sheath: PUR (green), wire insulation: PE foam, free of halogens, silicone and PVC

Bending radius > 65mm, suitable for drag chains
Bending cycles > 10^6, perm. acceleration < $5 m/s^2$

Ethernet connection cable order codes

Type designation	Description	Part no.
M12 plug for BUS IN, axial connector, open cable end		
KB ET - 1000 - SA	Cable length 1m	50106738
KB ET - 2000 - SA	Cable length 2m	50106739
KB ET - 5000 - SA	Cable length 5m	50106740
KB ET - 10000 - SA	Cable length 10m	50106741
KB ET - 15000 - SA	Cable length 15m	50106742
KB ET - 20000 - SA	Cable length 20m	50106743
KB ET - 25000 - SA	Cable length 25m	50106745
KB ET - 30000 - SA	Cable length 30m	50106746
M12 plug for BUS IN to RJ-45 connector		
KB ET - 1000 - SA-RJ45	Cable length 1m, cable 1:1, not crossed	50109879
KB ET - 2000 - SA-RJ45	Cable length 2m, cable 1:1, not crossed	50109880
KB ET - 5000 - SA-RJ45	Cable length 5m, cable 1:1, not crossed	50109881
KB ET - 10000 - SA-RJ45	Cable length 10m, cable 1:1, not crossed	50109882
KB ET - 15000 - SA-RJ45	Cable length 15m, cable 1:1, not crossed	50109883
KB ET - 20000 - SA-RJ45	Cable length 20m, cable 1:1, not crossed	50109884
KB ET - 25000 - SA-RJ45	Cable length 25m, cable 1:1, not crossed	50109885
KB ET - 30000 - SA-RJ45	Cable length 30m, cable 1:1, not crossed	50109886
M12 plug + M12 plug for BUS OUT to BUS IN		
KB ET - 1000 - SSA	Cable length 1m, cable 1:1, not crossed	50106898
KB ET - 2000 - SSA	Cable length 2m, cable 1:1, not crossed	50106899
KB ET - 5000 - SSA	Cable length 5m, cable 1:1, not crossed	50106900
KB ET - 10000 - SSA	Cable length 10m, cable 1:1, not crossed	50106901
KB ET - 15000 - SSA	Cable length 15m, cable 1:1, not crossed	50106902
KB ET - 20000 - SSA	Cable length 20m, cable 1:1, not crossed	50106903
KB ET - 25000 - SSA	Cable length 25m, cable 1:1, not crossed	50106904
KB ET - 30000 - SSA	Cable length 30m, cable 1:1, not crossed	50106905

12 Maintenance

12.1 General maintenance information

With normal use, the laser measurement system does not require any maintenance by the operator.

Cleaning

In the event of dust build-up or if the (ATT) warning message is displayed, clean the device with a soft cloth; use a cleaning agent (commercially available glass cleaner) if necessary.

Also check the reflector for possible soiling.

Attention!

Do not use solvents and cleaning agents containing acetone. Use of such solvents could blur the reflector, the housing window and the display.

12.2 Repairs, servicing

Attention!

Access to or changes on the device, except where expressly described in this operating manual, are not authorized.
The device must not be opened. Failure to comply will render the guarantee void. Warranted features cannot be guaranteed after the device has been opened.

Repairs to the device must only be carried out by the manufacturer.

↳ *Contact your Leuze distributor or service organization should repairs be required. The addresses can be found on the inside of the cover and on the back.*

Notice!

When sending the laser measurement systems to Leuze electronic for repair, please provide an accurate description of the error.

12.3 Disassembling, packing, disposing

Repacking

For later reuse, the device is to be packed so that it is protected.

Notice!

Electrical scrap is a special waste product! Observe the locally applicable regulations regarding disposal of the product.

A

Accessories 67
Accessory deflector unit 68
Accessory mounting bracket 68
Accessory ready-made cables 69
Accuracy 15
Air humidity 16
Alignment 21

B

BUS LED 43

C

Cleaning 72
Connections
  Ethernet TCP/IP BUS IN 39
  Ethernet TCP/IP BUS OUT 40
  PWR IN 39
  Service 40
Control buttons 45
Control panel 41

D

Declaration of conformity 4
Deflector unit
  Maximum ranges 25
  With integrated mounting bracket 25
  Without mounting bracket 27
Deflector unit US 1 OMS
  Dimensioned drawing 27
Deflector unit US AMS 01
  Dimensioned drawing 26
Description of functions 5
Diagnostics 62
Dimensioned drawing of AMS 3xxi 17
Display 41

E

Electrical connection 38
  Safety notices 38
Expanded diagnostics 63
Explanation of symbols 4

F

Fast commissioning 11

G

General causes of errors 63

H

Heated reflectors
  Dimensioned drawing 32
  Specifications 31

I

Installation 19
Interface errors 65
Interface info in display 42
Internal hardware error 42

L

LED LINK 44
LSR status display 66

M

Main menu
  Device information 46
  Language selection 47
  Network information 46
  Parameter 46
  Service 47
Maintenance 72
Measurement range 15
Measurement value output 15
Menus
  Language selection menu 52
  Main menu 46
  Parameter menu 47
  Service menu 52
Mounting 20
  with laser beam deflector unit 25
Mounting bracket(optional) 22
Mounting distances 23

N

Name plates 19
Network operation 12

O

Operating principle 11
Operating temperature 16
Operation 41, 52
Overview of reflector types 68

P
Packaging 19
Parameter enabling 52, 53
Parameter menu
Ethernet 48
I/O 50
Maximum position value 49
Other 51
Parameter handling 47
Plausibility error 42
Prefailure message 42
PROFINET interface 54
PWR LED 43

Q
Quality assurance 4

R
Received signal 42
Reflective tape
Dimensioned drawing 30
Specifications 29
Reflector 28
Mounting 34
Pitch 37
Size 33
Type overview 33
Repair 72

S
Sensing distance 67
Servicing 72
Specifications 15
Dimensioned drawing 17
General specifications 15
Reflective tapes 28
Stand-alone operation 12
Status and measurement data - main menu 46
Status- and warning messages 41
Status display 41
ATT 66
ERR 66
PLB 65
TMP 66
Status display in the display 65
Status displays 43
Status messages 62
Storage 19
Storage temperature 16
Supply voltage 15
Surface reflections 35
Symbols 4

T
Temperature monitoring 42
Transport 19
Troubleshooting 62
Type overview 18, 67

Level 1 ▲▼ : selection	Level 2 ▲▼ : selection ESC : back	Level 3 ▲▼ : selection ESC : back	Level 4 ▲▼ : selection ESC : back	Level 5 ▲▼ : selection ESC : back	Level 6 ▲▼ : selection ESC : back	Selection/configuration option ▲▼ : selection ↵ : activate ESC : back	Detailed information on
Device information							page 43
Network information							page 43
Status- and measurement data							page 43
Parameter ↵	Parameter handling	↵ Parameter enabling				ON / OFF	page 45
		↵ Password	↵ Activate password			ON / OFF	
			↵ Password entry			Configuration option of a four-digit numerical password	
		↵ Parameters to default				All parameters are reset to their factory settings	
	↵ Ethernet	↵ Ethernet interface	↵ Address			IP address entry in the ---.---.---.--- format	
			↵ Gateway			Gateway address entry in the ---.---.---.--- format	
			↵ Net mask			Entry for the net mask in ---.---.---.--- format	
			↵ DHCP activated			ON / OFF	
		↵ HOST communication	↵ TCP/IP	↵ Activation		ON / OFF	
				↵ Mode		Server/client	
				↵ Keep Alive Interval		Value entry in ms	
				↵ TCP/IP Client	↵ IP address	Value entry in ---.---.---.--- format	
					↵ Port number	0 …65535	
					↵ Timeout	100 … 60,000 ms	
					↵ Repetition time	100 … 60,000 ms	
				↵ TCP/IP Server	↵ Port number	0 …65535	
			↵ UDP	↵ Activation		ON / OFF	
				↵ IP address		Value entry in ---.---.---.--- format	
				↵ Port number		0 …65535	
		↵ Output cycle				Value input	
		↵ Position resolution				0.01 mm / 0.1 mm / 1 mm / 10 mm / free resolution	
		↵ Velocity resolution				1 / 10 / 100	
	↵ Maximum position value	↵ Measurement unit				Metric/Inch	
		↵ Count direction				Positive/Negative	
		↵ Offset				Value input	
		↵ Preset				Value input	
		↵ Error delay				ON / OFF	
		↵ Position value in the case of error				Last valid value / zero	
		↵ Free resolution value				5 …50000	
	↵ I/O	↵ I/O 1	↵ Port configuration			Input/Output	page 48
			↵ Switching input	↵ Function		No function/preset teach/laser ON/OFF	
				↵ Activation		Low active/High active	
			↵ Switching output	↵ Function		Pos. limit value 1 / Pos. limit value 2 / Velocity / Intensity (ATT) / Temp. (TMP) / Laser (LSR) / Plausibility (PLB) / Hardware (ERR)	
				↵ Activation		Low active/High active	

			I/O 2		Port configuration		Input/Output	
					Switching input	Function	No function/preset teach/laser ON/OFF	
						Activation	Low active/High active	
					Switching output	Function	Pos. limit value 1 / Pos. limit value 2 / Velocity / Intensity (ATT) / Temp. (TMP) / Laser (LSR) / Plausibility (PLB) / Hardware (ERR)	
						Activation	Low active/High active	
			Limit values		Upper pos. limit 1	Activation	ON / OFF	
						Limit value input	Value input in mm or inch/100	
					Lower pos. limit 1	Activation	ON / OFF	
						Limit value input	Value input in mm or inch/100	
					Upper pos. limit 2	Activation	ON / OFF	
						Limit value input	Value input in mm or inch/100	
					Lower pos. limit 2	Activation	ON / OFF	
						Limit value input	Value input in mm or inch/100	
					Max. velocity	Activation	ON / OFF	
						Max. velocity	Value input in mm/s or inch/100s	
		Other	Heating control				Standard/extended (10°C … 15°C/30°C … 35°C)	page 49
			Display background				10 minutes/ON	
			Display contrast				Weak/Medium/Strong	
			Service RS232		Baud rate		57.6 kbit/s / 115.2 kbit/s	
					Format		8,e,1 / 8,n,1	
Language selection							Deutsch / English / Español / Français / Italiano	page 49
Service		Status messages					Number of readings, reading gates, reading rate / non-reading rate etc.	page 50
		Diagnostics					Exclusively for service purposes by Leuze electronic	
		Expanded diagnostics					Exclusively for service purposes by Leuze electronic	