SMART
SENSOR
BUSINESS

Leuze electronic

the sensor people

MLC 310
Safety Light Curtains

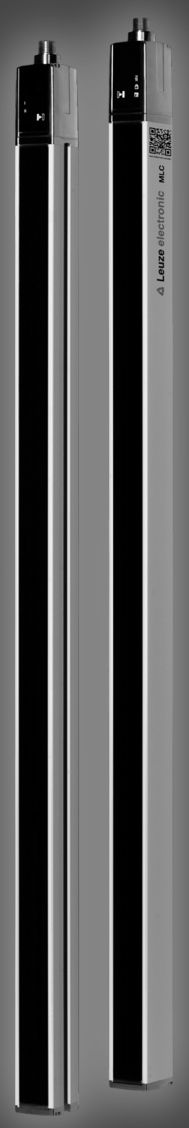

EN 2019/03/11 - 700081
We reserve the right to make technical changes

SAFE IMPLEMENTATION AND OPERATION
Original operating instructions

ПРОМЭЛЕКТРОНИКА / sales@prom-elec.com

© 2019
Leuze electronic GmbH & Co. KG
In der Braike 1
D-73277 Owen / Germany
Phone: +49 7021 573-0
Fax: +49 7021 573-199
http://www.leuze.com
info@leuze.com

1 About this document ... 5
1.1 Used symbols and signal words ... 5
1.2 Checklists ... 6
2 Safety ... 7
2.1 Intended use and foreseeable misuse ... 7
2.1.1 Intended use ... 7
2.1.2 Foreseeable misuse ... 8
2.2 Necessary competencies ... 8
2.3 Responsibility for safety ... 9
2.4 Disclaimer ... 9
3 Device description ... 10
3.1 Device overview of the MLC family ... 10
3.2 Connection technology ... 11
3.3 Display elements ... 12
3.3.1 Operating indicators on the MLC 300 transmitter ... 12
3.3.2 Operating indicators on the MLC 310 receiver ... 13
4 Functions ... 14
4.1 Transmission channel changeover ... 14
4.2 Operating range selection ... 14
5 Applications ... 15
5.1 Point of operation guarding ... 15
5.2 Access guarding ... 16
5.3 Danger zone guarding ... 16
6 Mounting ... 17
6.1 Arrangement of transmitter and receiver ... 17
6.1.1 Calculation of safety distance S ... 17
6.1.2 Calculation of safety distance if protective fields act orthogonally to the approach direction ... 18
6.1.3 Calculation of safety distance S for parallel approach to the protective field ... 22
6.1.4 Minimum distance to reflective surfaces ... 24
6.1.5 Preventing mutual interference between adjacent devices ... 25
6.2 Mounting the safety sensor ... 26
6.2.1 Suitable mounting locations ... 26
6.2.2 Definition of directions of movement ... 27
6.2.3 Fastening via BT-NC60 sliding blocks ... 27
6.2.4 Fastening via BT-2HF swivel mount ... 28
6.2.5 Fastening via BT-2SB10 swiveling mounting brackets ... 28
6.2.6 One-sided mounting on the machine table ... 29
6.3 Mounting accessories ... 29
6.3.1 Deflecting mirror for multiple-side guarding ... 29
6.3.2 MLC-PS protective screen ... 31
7 Electrical connection ... 32
7.1 Pin assignment transmitter and receiver ... 32
7.1.1 MLC 300 transmitter ... 32
7.1.2 MLC 310 receiver ... 34
7.2 Circuit diagram examples ... 35
7.2.1 MLC 310 circuit diagram example ... 35

8 Starting up the device ... 36
8.1 Switching on ... 36
8.2 Aligning the sensor ... 36
8.3 Aligning of deflecting mirrors with the laser alignment aid ... 37

9 Testing ... 38
9.1 Before commissioning and following modifications ... 38
9.1.1 Checklist for integrator – to be performed prior to commissioning and following modifications ... 38
9.2 To be performed periodically by competent persons ... 40
9.3 Periodically by the operator ... 40
9.3.1 Checklist – periodically by the operator ... 41

10 Maintenance ... 42

11 Troubleshooting ... 43
11.1 What to do in case of failure? ... 43
11.2 Operating indicators of the LEDs ... 43

12 Disposing ... 44

13 Service and support ... 45

14 Technical data ... 46
14.1 General specifications ... 46
14.2 Dimensions, weight, response time ... 48
14.3 Dimensioned drawings: Accessories ... 49

15 Order guide and accessories ... 52

16 EU/EC Declaration of Conformity ... 57

1 About this document

1.1 Used symbols and signal words

Tab. 1.1: Warning symbols and signal words

	Symbol indicating dangers to persons
	Symbol indicating possible property damage
NOTE	Signal word for property damage Indicates dangers that may result in property damage if the measures for danger avoidance are not followed.
CAUTION	Signal word for minor injuries Indicates dangers that may result in minor injury if the measures for danger avoidance are not followed.
WARNING	Signal word for serious injury Indicates dangers that may result in severe or fatal injury if the measures for danger avoidance are not followed.
DANGER	Signal word for life-threatening danger Indicates dangers with which serious or fatal injury is imminent if the measures for danger avoidance are not followed.

Tab. 1.2: Other symbols

	Symbol for tips Text passages with this symbol provide you with further information.
↳	Symbol for action steps Text passages with this symbol instruct you to perform actions.
⇨	Symbol for action results Text passages with this symbol describe the result of the preceding action.

Tab. 1.3: Terms and abbreviations

Response time	The response time of the protective device is the maximum time between the occurrence of the event that results in activation of the safety sensor and the provision of the switching signal at the interface of the protective device (e.g., OFF state of the OSSD pair).
AOPD	Active Optoelectronic Protective Device (**A**ctive **O**ptoelectronic **P**rotective **D**evice)
ESPE	**E**lectro-**s**ensitive **p**rotective **e**quipment
LED	LED, display element in transmitter and receiver
MLC	Brief description of the safety sensor, consisting of transmitter and receiver
$MTTF_d$	Mean time to dangerous failure (**M**ean **T**ime **T**o dangerous **F**ailure)
OSSD	Safety-related switching output (**O**utput **S**ignal **S**witching **D**evice)
PFH_d	Probability of a dangerous failure per hour (**P**robability of dangerous **F**ailure per **H**our)

PL	**P**erformance **L**evel
Scan	Consecutive scans of the protective field from the first to the last beam
Safety sensor	System consisting of transmitter and receiver
SIL	**S**afety **I**ntegrity **L**evel
State	ON: device intact, OSSD switched on OFF: device intact, OSSD switched off Locking: device, connection or control / operation faulty, OSSD switched off (lock-out)

1.2 Checklists

The checklists (see chapter 9 "Testing") serve as a reference for the machine manufacturer or supplier. They replace neither testing of the complete machine or system prior to initial commissioning nor their periodic testing by a qualified person (see chapter 2.2 "Necessary competencies"). The checklists contain minimum testing requirements. Depending on the application, other tests may be necessary.

2 Safety

For mounting, operating and testing, this document as well as all applicable national and international standards, regulations, rules and directives must be observed. Relevant and supplied documents must be observed, printed out and handed to affected persons.

↳ Before working with the safety sensor, completely read and observe the documents applicable to your task.

In particular, the following national and international legal regulations apply for the commissioning, technical inspections and work with safety sensors:

- Directive 2006/42/EC
- Directive 2014/35/EU
- Directive 2014/30/EU
- Directive 89/655/EEC supplemented by directive 95/63 EC
- OSHA 1910 Subpart O
- Safety regulations
- Accident-prevention regulations and safety rules
- Ordinance on Industrial Safety and Health and employment protection act
- Product Safety Law (ProdSG and 9. ProdSV)

	NOTICE
	For safety-related information you may also contact local authorities (e.g., industrial inspectorate, employer's liability insurance association, labor inspectorate, occupational safety and health authority).

2.1 Intended use and foreseeable misuse

	WARNING
	A running machine may result in serious injury! ↳ Make certain that the safety sensor is correctly connected and that the protective function of the protective device is ensured. ↳ Make certain that, during all conversions, maintenance work and inspections, the system is securely shut down and protected against being restarted.

2.1.1 Intended use

- The safety sensor may only be used after it has been selected in accordance with the respectively applicable instructions and relevant standards, rules and regulations regarding labor protection and safety at work, and after it has been installed on the machine, connected, commissioned, and checked by a competent person (see chapter 2.2 "Necessary competencies"). The devices are designed for indoor use only.
- When selecting the safety sensor it must be ensured that its safety-related capability meets or exceeds the required performance level PL_r ascertained in the risk assessment (see chapter 14.1 "General specifications").
- The safety sensor protects persons or body parts at points of operation, danger zones or access points of machines and systems.
- With the *access guarding* function, the safety sensor detects persons only when they enter the danger zone but cannot tell whether there are any persons inside the danger zone. For this reason, a start/restart interlock or a suitable stepping behind protection in the safety chain is essential in this case.
- Maximum permissible approach speeds (see ISO 13855):
  - 1.6 m/s for access guarding
  - 2.0 m/s for guards of points of operation
- The construction of the safety sensor must not be altered. When manipulating the safety sensor, the protective function is no longer guaranteed. Manipulating the safety sensor also voids all warranty claims against the manufacturer of the safety sensor.

- The improper repair of the protective device may result in loss of the protective function. Make no repairs to the device components.
- The safety sensor must be inspected regularly by a competent person to ensure proper integration and mounting (see chapter 2.2 "Necessary competencies").
- The safety sensor must be exchanged after a maximum of 20 years. Repairs or the exchange of wear parts do not extend the mission time.

2.1.2 Foreseeable misuse

Any use other than that defined under the “Approved purpose” or which goes beyond that use is considered improper use.

In principle, the safety sensor is **not** suitable as a protective device for use in the following cases:

- Danger posed by ejected objects or the spraying of hot or hazardous liquids from within the danger zone
- Applications in explosive or easily flammable atmospheres

2.2 Necessary competencies

The safety sensor may only be configured, installed, connected, commissioned, serviced and tested in its respective application by persons who are suitably qualified for the given task. General prerequisites for suitably qualified persons:

- They have a suitable technical education.
- They are familiar with the relevant parts of the operating instructions for the safety sensor and the operating instructions for the machine.

Task-specific minimum requirements for competent persons:

Configuration

Specialist knowledge and experience in the selection and use of protective devices on machines as well as the application of technical rules and the locally valid regulations on labor protection, safety at work and safety technology.

Specialist knowledge in programming safety-related controls SRASW acc. to ISO 13849-1.

Mounting

Specialist knowledge and experience needed for the safe and correct installation and alignment of the safety sensor with regard to the respective machine.

Electrical installation

Specialist knowledge and experience needed for the safe and correct electrical connection as well as safe integration of the safety sensor in the safety-related control system.

Operation and maintenance

Specialist knowledge and experience needed for the regular inspection and cleaning of the safety sensor – following instruction by the person responsible.

Servicing

Specialist knowledge and experience in the mounting, electrical installation and the operation and maintenance of the safety sensor in accordance with the requirements listed above.

Commissioning and testing

- Experience and specialist knowledge in the rules and regulations of labor protection, safety at work and safety technology that are necessary for being able to assess the safety of the machine and the use of the safety sensor, including experience with and knowledge of the measuring equipment necessary for performing this work.
- In addition, a task related to the subject matter is performed in a timely manner and knowledge is kept up to date through continuous further training - *Competent person* in terms of the German Betriebssicherheitsverordnung (Ordinance on Industrial Safety and Health) or other national legal regulations.

2.3 Responsibility for safety

Manufacturer and operator must ensure that the machine and implemented safety sensor function properly and that all affected persons are adequately informed and trained.

The type and content of all imparted information must not lead to unsafe actions by users.

The manufacturer of the machine is responsible for:

- Safe machine construction and information on any residual risks
- Safe implementation of the safety sensor, verified by the initial test performed by a competent person (see chapter 2.2 "Necessary competencies")
- Imparting all relevant information to the operating company
- Adhering to all regulations and directives for the safe commissioning of the machine

The operator of the machine is responsible for:

- Instructing the operator
- Maintaining the safe operation of the machine
- Adhering to all regulations and directives for labor protection and safety at work
- Periodic testing by a competent person (see chapter 2.2 "Necessary competencies")

2.4 Disclaimer

The liability of Leuze electronic GmbH + Co. KG is to be excluded in the following cases:

- Safety sensor is not used as intended.
- Safety notices are not adhered to.
- Reasonably foreseeable misuse is not taken into account.
- Mounting and electrical connection are not properly performed.
- Proper function is not tested (see chapter 9 "Testing").
- Changes (e.g., constructional) are made to the safety sensor.

3 Device description

The safety sensors from the MLC 300 series are active opto-electronic protective devices. They satisfy the following standards:

	MLC 300
Type in accordance with EN IEC 61496	2
Category in accordance with EN ISO 13849	2
Performance Level (PL) in accordance with EN ISO 13849-1:2015	c
Safety Integrity Level (SIL) in accordance with IEC 61508 and SILCL in accordance with EN IEC 62061	1

The safety sensor consists of a transmitter and a receiver (see chapter 3.1 "Device overview of the MLC family"). It is protected against overvoltage and overcurrent acc. to IEC 60204-1 (protection class 3). The safety sensor is not dangerously influenced by ambient light (e.g., welding sparks, warning lights).

3.1 Device overview of the MLC family

The series is characterized by two different receiver classes (Basic, Standard) with certain features and properties (see table below).

Tab. 3.1: Device models in the series with specific features and functions

	Transmitter	Receiver	
		Basic	Standard
	MLC 300 MLC 301	MLC 310 MLC 311	MLC 320
OSSDs (2x)		■	■
Transmission channel changeover	■	■	■
LED indicator	■	■	■
7-segment display			■
Automatic start/restart		■	■
RES			■
EDM			■
Range reduction	■		

Protective field properties

The beam distance and the number of beams are dependent on the resolution and protective field height.

NOTICE

Depending on the resolution, the effective protective field height can be larger than the optically active area of the safety sensor housed in yellow (see chapter 3.1 "Device overview of the MLC family" and see chapter 14.1 "General specifications").

Device synchronization

The synchronization of receiver and transmitter for creating a functioning protective field is done optically, i.e. without cables, via two specially coded synchronization beams. A cycle (i.e. a pass from the first to the last beam) is called a scan. The length of a scan determines the length of the response time and affects the calculation of the safety distance (see chapter 6.1.1 "Calculation of safety distance S").

NOTICE

For the correct synchronization and function of the safety sensor, at least one of the two synchronization beams must be free during synchronization and operation.

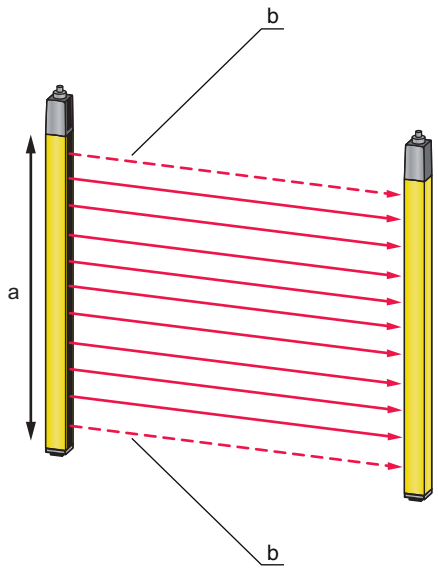

a Optically active area, housed in yellow
b Synchronization beams

Fig. 3.1: Transmitter-receiver system

QR code

A QR code as well as the corresponding web address are located on the safety sensor.

At the web address, you will find device information and error messages after scanning the QR code with a mobile end device or after entering the web address.

When using mobile end devices, mobile service charges can accrue.

www.mobile.leuze.com/mlc/

Fig. 3.2: QR code with corresponding web address (URL) on the safety sensor

3.2 Connection technology

The transmitter and receiver feature an M12 connector as an interface to the machine control with the following number of pins:

Device model	Device type	Device plug
MLC 300	Transmitter	5-pin
MLC 310	Basic receiver	5-pin

3.3 Display elements

The display elements of the safety sensors simplify start-up and fault analysis.

3.3.1 Operating indicators on the MLC 300 transmitter

Located in the connection cap on the transmitter are two LEDs which serve as function indicators:

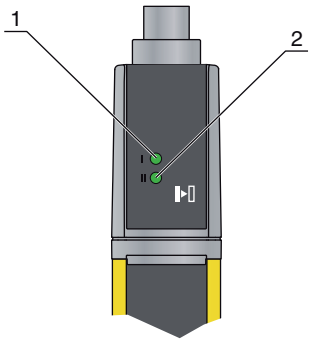

1 LED1, green/red
2 LED2, green

Fig. 3.3: Indicators on the MLC 300 transmitter

Tab. 3.2: Meaning of the LEDs on the transmitter

LED	Color	State	Description
1	Green/red	OFF	Device switched off
		Red	Device error
		Green	Normal operation
2	Green	Flashing	For 10 s after switch-on: reduced range selected by the wiring of pin 4
		OFF	Transmission channel C1
		ON	Transmission channel C2

3.3.2 Operating indicators on the MLC 310 receiver

Located on the receiver are two LEDs for displaying the operating state:

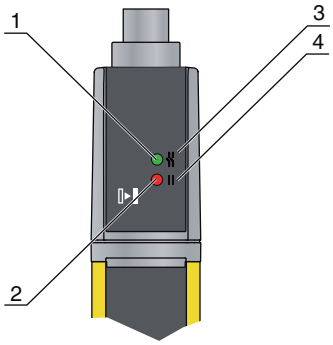

1 LED1, red/green
2 LED2, red
3 OSSD icon
4 Transmission channel icon C2

Fig. 3.4: Indicators on the MLC 310 receiver

Tab. 3.3: Meaning of the LEDs on the receiver

LED	Color	State	Description
1	Red/green	OFF	Device switched off
		Red	OSSD off
		Red, flashing slowly (approx. 1 Hz)	External error
		Red, flashing fast (approx. 10 Hz)	Internal error
		Green, flashing slowly (approx. 1 Hz)	OSSD on, weak signal
		Green	OSSD on
2	Red	OFF	Transmission channel C1
		ON	OSSD off, transmission channel C2

4 Functions

An overview of features and functions of the safety sensor can be found in chapter “Device description” (see chapter 3.1 "Device overview of the MLC family").

Overview of functions

- Range reduction
- Transmission channel changeover

4.1 Transmission channel changeover

Transmission channels are used to prevent mutual interference of safety sensors which are located close to each other.

	NOTICE
	To guarantee reliable operation, the infrared beams are modulated so they can be discerned from the ambient light. Welding sparks or warning lights, e.g. from passing high-lift trucks, thereby do not influence the protective field.

With the factory setting, the safety sensor works in all operating modes with transmission channel C1.

	NOTICE
	Faulty function due to incorrect transmission channel! Select the same transmission channel on the transmitter and corresponding receiver.

4.2 Operating range selection

In addition to selecting the suitable transmission channels (see chapter 4.1 "Transmission channel changeover"), the operating range selection also serves to prevent mutual interference of adjacent safety sensors. At reduced operating range the light power of the transmitter reduces, so that around half of the nominal range is reached.

Select operating range:

↳ Wire pin 4 (see chapter 7.1 "Pin assignment transmitter and receiver").

⇨ The wiring of pin 4 determines the transmitting power and thereby the range.

	WARNING
	Impairment of the protective function due to incorrect transmitting power! The light power emitted from the transmitter is reduced through a single channel and without safety-relevant monitoring. ↳ Do not use this configuration option for safety purposes. ↳ Note that the distance to reflective surfaces must always be selected so that no reflection bypass can occur even at maximum transmitting power (see chapter 6.1.4 "Minimum distance to reflective surfaces").

5 Applications

The safety sensor only creates square protective fields.

5.1 Point of operation guarding

Point of operation guarding for hand and finger protection is typically the most common application for this safety sensor. In accordance with EN ISO 13855, resolutions from 14 to 40 mm make sense here. This yields the necessary safety distance, among others (see chapter 6.1.1 "Calculation of safety distance S").

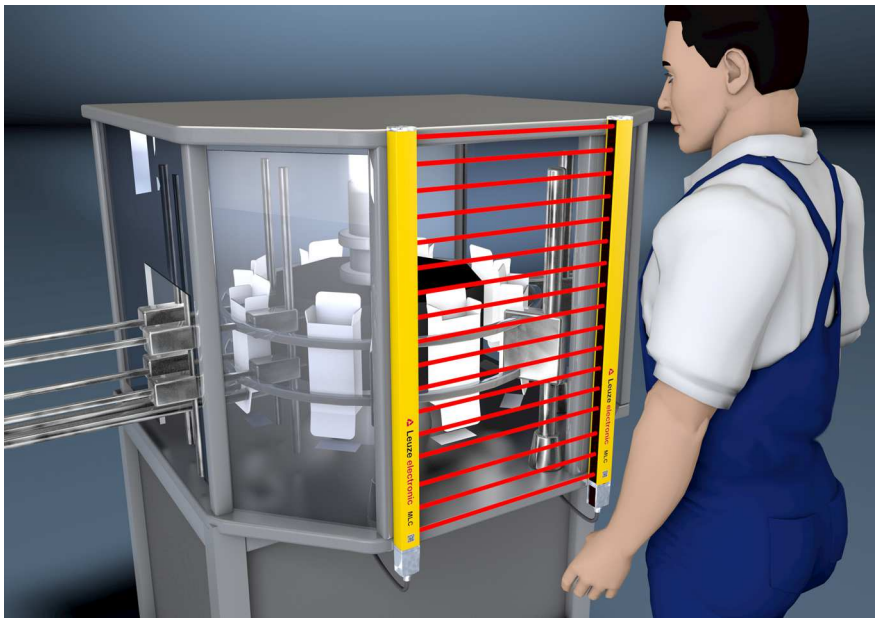

Fig. 5.1: Point of operation guarding protects reaching into the danger zone, e.g. for cartoners or filling systems

Fig. 5.2: Point of operation guarding protects reaching into the danger zone, e.g. for a pick & place robot application

5.2 Access guarding

Safety sensors with up to 90 mm resolution are used for access guarding into danger zones. They detect people only upon entry into the danger zone, i.e., they do not detect parts of a person or whether a person is present in the danger zone.

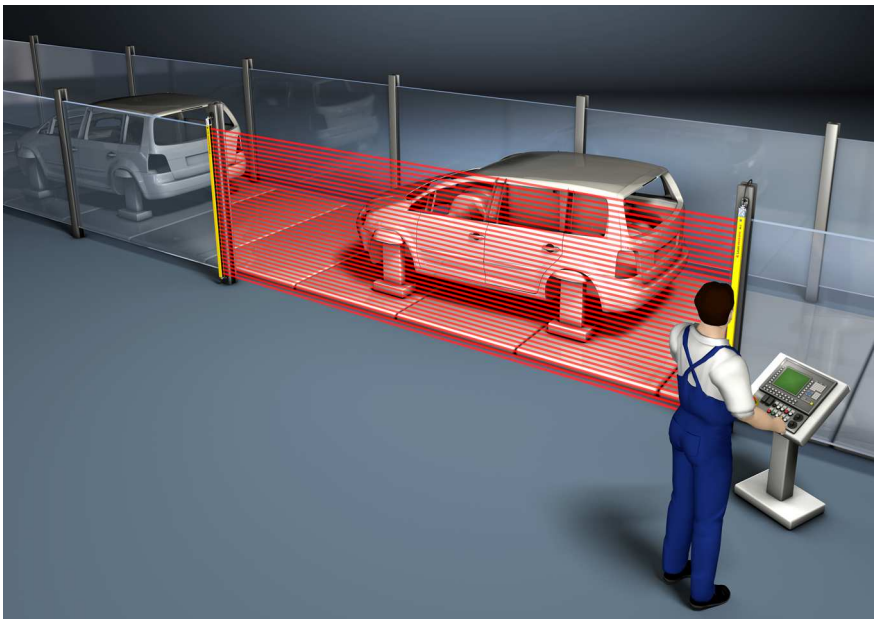

Fig. 5.3: Access guarding on a transfer path

5.3 Danger zone guarding

Safety light curtains can be used in horizontal arrangement for danger zone guarding - either as stand-alone device for presence monitoring or as stepping behind protection for presence monitoring e.g. in combination with a vertically-arranged safety sensor. Depending on the mounting height, resolutions of 40 or 90 mm are used (Link destination: order guide and accessories).

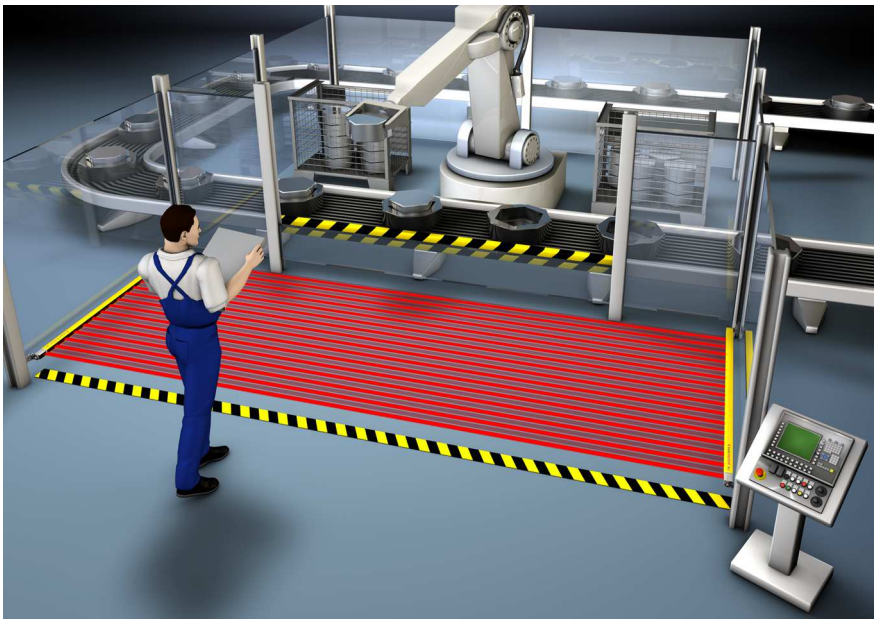

Fig. 5.4: Danger zone guarding on a robot

6 Mounting

WARNING

Improper mounting may result in serious injury!

The protective function of the safety sensor is only ensured if appropriately and professionally mounted for the respective, intended area of application.

- Only allow the safety sensor to be installed by qualified persons (see chapter 2.2 "Necessary competencies").
- Maintain the necessary safety distances (see chapter 6.1.1 "Calculation of safety distance S").
- Make sure that stepping behind, crawling under or stepping over the protective device is reliably ruled out and reaching under, over or around is taken into account in the safety distance, if applicable with additional distance C_{RO} corresponding to ISO 13855.
- Take measures to prevent that the safety sensor can be used to gain access to the danger zone, e.g. by stepping or climbing into it.
- Observe the relevant standards, regulations and these instructions.
- Clean the transmitter and receiver at regular intervals: environmental conditions (see chapter 14 "Technical data"), care (see chapter 10 "Maintenance").
- After mounting, check the safety sensor for proper function.

6.1 Arrangement of transmitter and receiver

Optical protective devices can only perform their protective function if they are mounted with adequate safety distance. When mounting, all delay times must be taken into account, such as the response times of the safety sensor and control elements as well as the stopping time of the machine, among others.

The following standards specify calculation formulas:

- IEC 61496-2, "Active optoelectronic protective devices": distance of the reflecting surfaces/deflecting mirrors
- ISO 13855, "Safety of machines - The positioning of protective equipment in respect of approach speeds of parts of the human body": mounting situation and safety distances

NOTICE

In accordance with ISO 13855, with a vertical protective field, it is possible to pass under beams over 300 mm or pass over beams under 900 mm. If the protective field is horizontal, climbing on the safety sensor must be prevented through suitable installation or with covers and the like.

6.1.1 Calculation of safety distance S

General formula for calculating the safety distance S of an Optoelectronic Protective Device acc. to ISO 13855

$$S = K \cdot T + C$$

S	[mm]	=	Safety distance
K	[mm/s]	=	Approach speed
T	[s]	=	Total time of the delay, sum from ($t_a + t_i + t_m$)
t_a	[s]	=	Response time of the protective device
t_i	[s]	=	Response time of the safety relay
t_m	[s]	=	Stopping time of the machine
C	[mm]	=	Additional distance to the safety distance

NOTICE	
	If longer stopping times are determined during regular inspections, an appropriate additional time must be added to t_m.

6.1.2 Calculation of safety distance if protective fields act orthogonally to the approach direction

With vertical protective fields, ISO 13855 differentiates between

- S_{RT}: safety distance concerning access **through** the protective field
- S_{RO}: safety distance concerning access **over** the protective field

The two values are distinguished by the way additional distance C is determined:

- C_{RT}: from a calculation formula or as a constant (see chapter 6.1.1 "Calculation of safety distance S")
- C_{RO}: from the following table “Reaching over the vertical protective field of electro-sensitive protective equipment (excerpt from ISO 13855)”

The larger of the two values S_{RT} and S_{RO} is to be used.

Calculation of safety distance S_{RT} acc. to ISO 13855 when access occurs through the protective field:

Calculation of safety distance S_{RT} for point of operation guarding

$$S_{RT} = K \cdot T + C_{RT}$$

S_{RT}	[mm]	=	Safety distance
K	[mm/s]	=	Approach speed for point of operation guarding with approach reaction and normal approach direction to the protective field (resolution 14 to 40 mm): 2000 mm/s or 1600 mm/s, when S_{RT} > 500 mm
T	[s]	=	Total time of the delay, sum from (t_a + t_i + t_m)
t_a	[s]	=	Response time of the protective device
t_i	[s]	=	Response time of the safety relay
t_m	[s]	=	Stopping time of the machine
C_{RT}	[mm]	=	Additional distance for point of operation guarding with approach reaction with resolutions of 14 to 40 mm, d = resolution of protective device C_{RT} = 8 × (d - 14) mm

Calculation example

The feeding-in area in a press with a stopping time (including press Safety PLC) of 190 ms is to be safeguarded with a safety light curtain with 20 mm of resolution and 1200 mm of protective field height. The safety light curtain has a response time of 22 ms.

↳ Calculate safety distance S_{RT} using the formula acc. to ISO 13855.

$$S_{RT} = K \cdot T + C_{RT}$$

K	[mm/s]	=	2000
T	[s]	=	(0.022 + 0.190)
C_{RT}	[mm]	=	8 × (20 - 14)
S_{RT}	[mm]	=	2000 mm/s × 0.212 s + 48 mm
S_{RT}	**[mm]**	**=**	**472**

S_{RT} is smaller than 500 mm; this is why the calculation may **not** be repeated with 1600 mm/s.

NOTICE	
	Implement the stepping behind protection required here, e.g., through the use of an additional or cascaded safety sensor for area protection.

Calculation of safety distance S_{RT} for access guarding

$$S_{RT} = K \cdot T + C_{RT}$$

S_{RT}	[mm]	=	Safety distance
K	[mm/s]	=	Approach speed for access guarding with approach direction orthogonal to the protective field: 2000 mm/s or 1600 mm/s, when S_{RT} > 500 mm
T	[s]	=	Total time of the delay, sum from (t_a + t_i + t_m)
t_a	[s]	=	Response time of the protective device
t_i	[s]	=	Response time of the safety relay
t_m	[s]	=	Stopping time of the machine
C_{RT}	[mm]	=	Additional distance for access guarding with approach reaction with resolutions of 14 to 40 mm, d = resolution of protective device C_{RT} = 8 × (d - 14) mm. Additional distance for access guarding for resolutions > 40 mm: C_{RT} = 850 mm (standard value for arm length)

Calculation example

Access to a robot with a stopping time of 250 ms is to be safeguarded with a safety light curtain with 90 mm of resolution and 1500 mm of protective field height whose response time is 6 ms. The safety light curtain directly switches the contactors whose response time is contained in the 250 ms. An additional interface therefore does not have to be taken into consideration.

↳ Calculate safety distance S_{RT} using the formula acc. to ISO 13855.

$$S_{RT} = K \cdot T + C_{RT}$$

K	[mm/s]	=	1600
T	[s]	=	(0.006 + 0.250)
C_{RT}	[mm]	=	850
S_{RT}	[mm]	=	1600 mm/s × 0.256 s + 850 mm
S_{RT}	**[mm]**	**=**	**1260**

This safety distance is not available in the application. This is why a new calculation is done with a safety light curtain with 40 mm of resolution (response time = 14 ms):

↳ Re-calculate safety distance S_{RT} using the formula acc. to ISO 13855.

$$S_{RT} = K \cdot T + C_{RT}$$

K	[mm/s]	=	1600
T	[s]	=	(0.014 + 0.250)
C_{RT}	[mm]	=	8 ×~ (40 - 14)
S_{RT}	[mm]	=	1600 mm/s × 0.264 s + 208 mm
S_{RT}	**[mm]**	**=**	**631**

The safety light curtain with a 40 mm resolution is thus suitable for this application.

	NOTICE
	For the calculation with K = 2000 mm/s, safety distance S_{RT} equals 736 mm. The adoption of approach speed K = 1600 mm/s is therefore permitted.

Calculation of safety distance S_{Ro} acc. to ISO 13855 when protective field is accessed from above:

Calculation of safety distance S_{Ro} for point of operation guarding

$$S_{RO} = K \cdot T + C_{RO}$$

S_{RO}	[mm]	=	Safety distance
K	[mm/s]	=	Approach speed for point of operation guarding with approach reaction and normal approach direction to the protective field (resolution 14 to 40 mm): 2000 mm/s or 1600 mm/s, when S_{RO} > 500 mm
T	[s]	=	Total time of the delay, sum from (t_a + t_i + t_m)
t_a	[s]	=	Response time of the protective device
t_i	[s]	=	Response time of the safety relay
t_m	[s]	=	Stopping time of the machine
C_{RO}	[mm]	=	Additional distance in which a body part can move towards the protective device before the protective device triggers: value (see the following table “Reaching over the vertical protective field of electro-sensitive protective equipment (excerpt from ISO 13855)”).

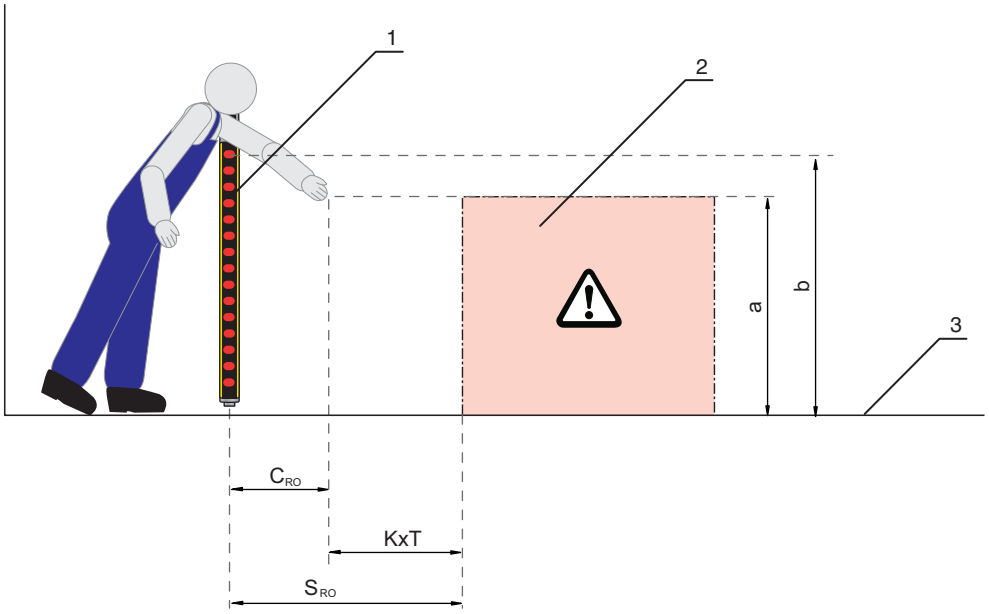

1	Safety sensor
2	Danger zone
3	Floor
a	Height of the point of operation
b	Height of the upper beam of the safety sensor

Fig. 6.1: Additional distance to the safety distance when reaching over and under

Tab. 6.1: Reaching over the vertical protective field of electro-sensitive protective equipment(excerpt from ISO 13855)

Height a of the point of operation [mm]	Height b of the upper edge of the protective field of the electro-sensitive protective equipment											
	900	1000	1100	1200	1300	1400	1600	1800	2000	2200	2400	2600
	Additional distance C_{RO} to the danger zone [mm]											
2600	0	0	0	0	0	0	0	0	0	0	0	0
2500	400	400	350	300	300	300	300	300	250	150	100	0
2400	550	550	550	500	450	450	400	400	300	250	100	0
2200	800	750	750	700	650	650	600	550	400	250	0	0

Height a of the point of operation [mm]	Height b of the upper edge of the protective field of the electro-sensitive protective equipment											
	900	1000	1100	1200	1300	1400	1600	1800	2000	2200	2400	2600
	Additional distance C_{RO} to the danger zone [mm]											
2000	950	950	850	850	800	750	700	550	400	0	0	0
1800	1100	1100	950	950	850	800	750	550	0	0	0	0
1600	1150	1150	1100	1000	900	850	750	450	0	0	0	0
1400	1200	1200	1100	1000	900	850	650	0	0	0	0	0
1200	1200	1200	1100	1000	850	800	0	0	0	0	0	0
1000	1200	1150	1050	950	750	700	0	0	0	0	0	0
800	1150	1050	950	800	500	450	0	0	0	0	0	0
600	1050	950	750	550	0	0	0	0	0	0	0	0
400	900	700	0	0	0	0	0	0	0	0	0	0
200	600	0	0	0	0	0	0	0	0	0	0	0
0	0	0	0	0	0	0	0	0	0	0	0	0

Depending on the specified values you can work with the above-mentioned table in three ways:

1. Given are:
   - Height a of the point of operation
   - Distance S of the point of operation from the safety sensor, and additional distance C_{RO}

To be determined is the required height b of the upper beam of the safety sensor and thereby its protective field height.

↳ Look for the line with the specification of the point of operation height in the left column.

↳ In this line, look for the column with the next highest specification for additional distance C_{RO}.

⇨ The required height of the upper beam of the safety sensor is up top in the column head.

2. Given are:
   - Height a of the point of operation
   - Height b of the upper beam of the safety sensor

To be determined is the required distance S of the safety sensor to the point of operation and thereby additional distance C_{RO}.

↳ In the column head, look for the column with the next lowest entry for the height of the upper beam of the safety sensor.

↳ Look for the line with the next highest specification of the point of operation height a in this column.

⇨ In the intersection point of the line and the column, you will find additional distance C_{RO}.

3. Given are:
   - Distance S of the point of operation from the safety sensor, and additional distance $C_{RO.}$
   - Height b of the upper beam of the safety sensor

To be determined is the permitted height a of the point of operation.

↳ In the column head, look for the column with the next lowest entry for the height of the upper beam of the safety sensor.

↳ Look for the next lowest value for real additional distance C_{RO} in this column.

⇨ In this line, go to the left column: here you will find the permitted height of the point of operation.

↳ Now calculate safety distance S using the general formula acc. to ISO 13855 (see chapter 6.1.1 "Calculation of safety distance S").

⇨ The larger of the two values S_{RT} and S_{RO} is to be used.

Calculation example

The feeding-in area in a press with a stopping time of 130 ms is to be safeguarded with a safety light curtain with 20 mm of resolution and 600 mm of protective field height. The response time of the safety light curtain is 12 ms; the press Safety PLC has a response time of 40 ms.

The safety sensor can be reached over. The upper edge of the protective field is located at a height of 1400 mm; the point of operation is located at a height of 1000 mm

Additional distance C_{RO} to the point of operation is 700 mm (see table “Reaching over the vertical protective field of electro-sensitive protective equipment (excerpt from ISO 13855)”).

↳ Calculate safety distance S_{RO} using the formula acc. to ISO 13855.

$$S_{RO} = K \cdot T + C_{RO}$$

K	[mm/s]	=	2000
T	[s]	=	(0.012 + 0.040 + 0.130)
C_{RO}	[mm]	=	700
S_{RO}	[mm]	=	2000 mm/s × 0.182 s + 700 mm
S_{RO}	**[mm]**	**=**	**1064**

S_{RO} is larger than 500 mm; this is why the calculation may be repeated with approach speed 1600 mm/s:

$$S_{RO} = K \cdot T + C_{RO}$$

K	[mm/s]	=	1600
T	[s]	=	(0.012 + 0.040 + 0.130)
C_{RO}	[mm]	=	700
S_{RO}	[mm]	=	1600 mm/s × 0.182 s + 700 mm
S_{RO}	**[mm]**	**=**	**992**

NOTICE

Depending on the machine construction, stepping behind protection, e.g. using a second horizontally arranged safety light curtain, is necessary. In most cases, it will be more appropriate to choose a longer safety light curtain which makes the additional distance C_{RO} equal to 0.

6.1.3 Calculation of safety distance S for parallel approach to the protective field

Calculation of safety distance S for danger zone guarding

$$S = K \cdot T + C$$

S	[mm]	=	Safety distance
K	[mm/s]	=	Approach speed for danger zone guarding with approach direction parallel to the protective field (resolution up to 90 mm): 1600 mm/s
T	[s]	=	Total time of the delay, sum from (t_a + t_i + t_m)
t_a	[s]	=	Response time of the protective device
t_i	[s]	=	Response time of the safety relay
t_m	[s]	=	Stopping time of the machine
C	[mm]	=	Additional distance for danger zone guarding with approach reaction H = height of the protective field, H_{min} = minimum installation height permitted, but no smaller than 0, d = resolution of the protective device C = 1200 mm - 0.4 × H; H_{min} = 15 × (d - 50)

Calculation example

The danger zone in front of a machine with a stopping time of 140 ms is to be safeguarded as close to the floor height as possible using a horizontal safety light curtain as a replacement for a PS mat. Installation height H_{min} can be = 0 - additional distance C to the safety distance is then 1200 mm. The shortest possible safety sensor is to be used; the first value to be selected is to be 1350 mm.

The receiver with 40 mm of resolution and 1350 mm protective field height has a response time of 13 ms, an additional relay interface a response time of 10 ms.

↳ Calculate safety distance S_{RO} using the formula acc. to ISO 13855.

$$S = K \cdot T + C$$

K	[mm/s]	=	1600
T	[s]	=	(0.140 + 0.013 + 0.010)
C	[mm]	=	1200
S	[mm]	=	1600 mm/s × 0.163 s + 1200 mm
S	**[mm]**	**=**	**1461**

The safety distance of 1350 mm is not sufficient; 1460 mm are necessary.

This is why the calculation is repeated with a protective field height of 1500 mm. The response time is now 14 ms.

↳ Re-calculate safety distance S_{RO} using the formula acc. to ISO 13855.

$$S = K \cdot T + C$$

K	[mm/s]	=	1600
T	[s]	=	(0.140 + 0.014 + 0.010)
C	[mm]	=	1200
S	[mm]	=	1600 mm/s × 0.164 s + 1200 mm
S	**[mm]**	**=**	**1463**

A suitable safety sensor has been found; its protective field height is 1500 mm.

6.1.4 Minimum distance to reflective surfaces

WARNING

Failure to maintain minimum distances to reflective surfaces may result in serious injury!

Reflective surfaces can indirectly deflect the transmitter beams to the receiver. In this case, interruption of the protective field is not detected.

- Determine the minimum distance a (see figure below).
- Make certain that all reflective surfaces are the necessary minimum distance away from the protective field according to IEC 61496-2 (see the following diagram “Minimum distance to reflective surfaces as a function of the protective field width”).
- Check that reflective surfaces do not impair the detection capability of the safety sensor before start-up and at appropriate intervals.

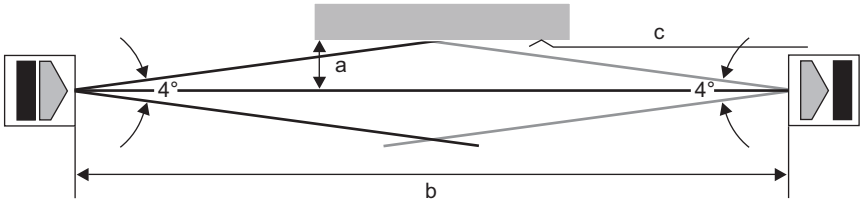

a Required minimum distance to reflective surfaces [mm]
b Protective field width [m]
c Reflective surface

Fig. 6.2: Minimum distance to reflective surfaces depending on protective field width

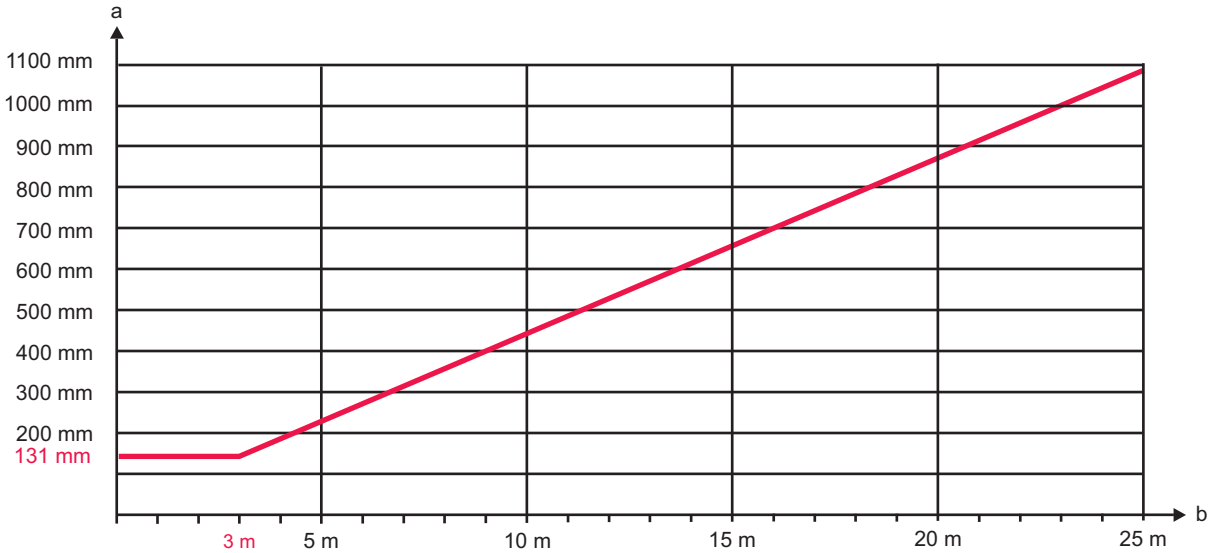

a Required minimum distance to reflective surfaces [mm]
b Protective field width [m]

Fig. 6.3: Minimum distance to reflective surfaces as a function of the protective field width

Tab. 6.2: Formula for calculating the minimum distance to reflective surfaces

Distance (b) transmitter-receiver	Calculation of the minimum distance (a) to reflective surfaces
b ≤ 3 m	a [mm] = 131
b > 3 m	a [mm] = tan(2.5°) × 1000 × b [m] = 43.66 × b [m]

6.1.5 Preventing mutual interference between adjacent devices

If a receiver is located in the beam path of an adjacent transmitter, optical crosstalk, and thus erroneous switching and failure of the protective function, may result.

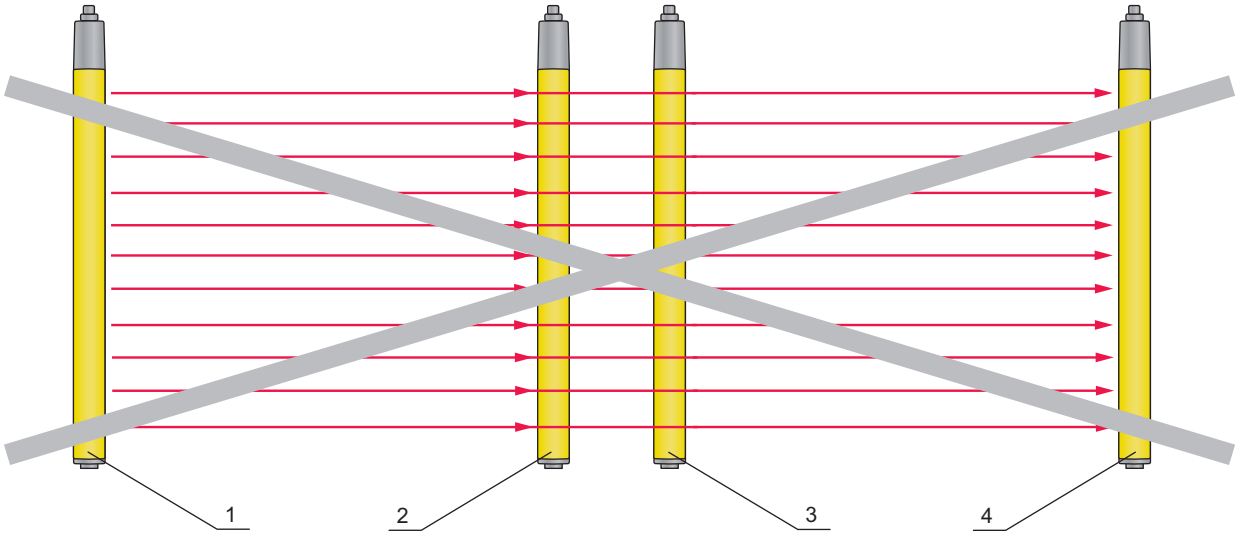

Fig. 6.4: Optical crosstalk between adjacent safety sensors (transmitter 1 influences receiver 2) due to incorrect mounting

1 Transmitter 1
2 Receiver 1
3 Transmitter 2
4 Receiver 2

NOTICE

Possible impairment of the availability due to systems mounted close to each other!

The transmitter of one system can influence the receiver of the other system.

↳ Prevent optical crosstalk between adjacent devices.

↳ Mount adjacent devices with a shield between them or install a dividing wall to prevent mutual interference.

↳ Mount the adjacent devices opposite from one another to prevent mutual interference.

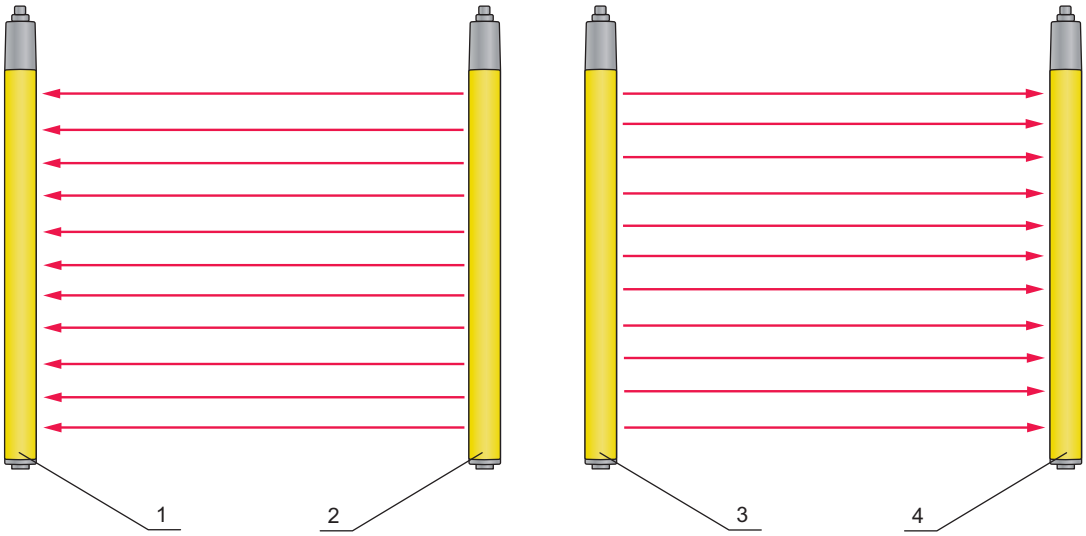

Fig. 6.5: Opposite mounting

1 Receiver 1
2 Transmitter 1
3 Transmitter 2
4 Receiver 2

In addition to design characteristics, the safety sensor offers functions that can remedy this:

- Selectable transmission channels (see chapter 4.1 "Transmission channel changeover")
- Range reduction (see chapter 4.2 "Operating range selection")
- Also: opposite mounting

6.2 Mounting the safety sensor

Proceed as follows:

- Select the type of fastening, e.g. sliding blocks (see chapter 6.2.3 "Fastening via BT-NC60 sliding blocks").
- Have a suitable tool at hand and mount the safety sensor in accordance with the notices regarding the mounting locations (see chapter 6.2.1 "Suitable mounting locations").
- If possible, affix safety notice stickers on the mounted safety sensor or device column (included in delivery contents).

After mounting, you can electrically connect (see chapter 7 "Electrical connection"), start up, align (see chapter 8 "Starting up the device"), and test (see chapter 9.1 "Before commissioning and following modifications") the safety sensor.

6.2.1 Suitable mounting locations

Area of application: Mounting

Tester: Technician who mounts the safety sensor

Tab. 6.3: Checklist for mounting preparations

Check:	Yes	No
Do the protective field height and dimensions satisfy the requirements of ISO 13855?		
Is the safety distance to the point of operation maintained (see chapter 6.1.1 "Calculation of safety distance S")?		
Is the minimum distance to reflective surfaces maintained (see chapter 6.1.4 "Minimum distance to reflective surfaces")?		
Is it impossible for safety sensors that are mounted next to one another to mutually interfere with one another (see chapter 6.1.5 "Preventing mutual interference between adjacent devices")?		
Can the point of operation or the danger zone only be accessed through the protective field?		
Has bypassing the protective field by crawling under, reaching over, or jumping over been prevented or has corresponding additional distance C_{RO} in accordance with ISO 13855 been observed?		
Is stepping behind the protective device prevented or is mechanical protection available?		
Do the transmitter and receiver connections point in the same direction?		
Can the transmitter and receiver be fastened in such a way that they cannot be moved and turned?		
Is the safety sensor accessible for testing and replacing?		
Is it impossible to actuate the reset button from within the danger zone?		
Can the entire danger zone be seen from the installation site of the reset button?		
Can reflection caused by the installation site be ruled out?		

NOTICE

If you answer one of the items on the checklist above with **no**, the mounting location must be changed.

6.2.2 Definition of directions of movement

The following terms for alignment movements of the safety sensor around one of its axes are used:

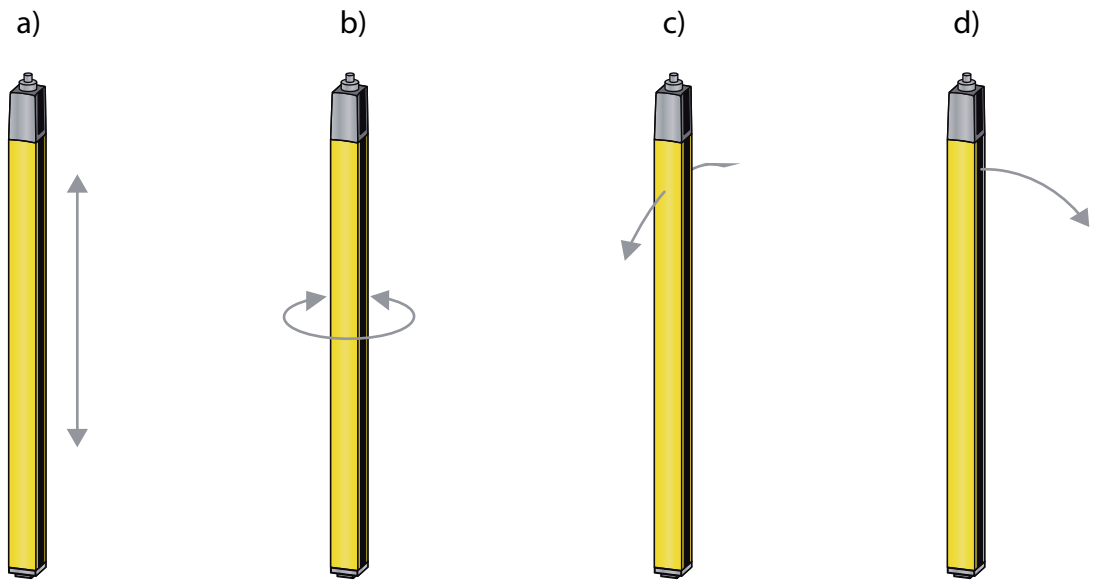

a	Sliding: movement along the longitudinal axis
b	Turning: movement around the longitudinal axis
c	Tilting: lateral turning movement diagonal to the front screen
d	Pitching: lateral turning movement in the direction of the front screen

Fig. 6.6: Directions of movement during alignment of the safety sensor

6.2.3 Fastening via BT-NC60 sliding blocks

By default, transmitter and receiver are delivered with 2 BT-NC60 sliding blocks each in the side slot. This makes fastening the safety sensor to the machine or system to be safeguarded easy via four M6 screws. Sliding in the direction of slot to set the height is possible, but turning, tilting and pitching is not.

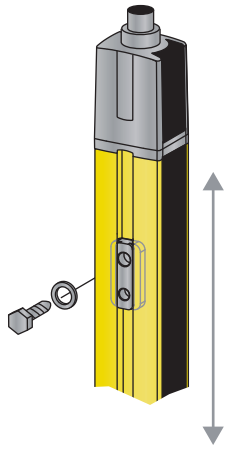

Fig. 6.7: Mounting via sliding blocks BT-NC60

6.2.4 Fastening via BT-2HF swivel mount

With the swivel mount (see chapter 15 "Order guide and accessories"), sold separately, the safety sensor can be aligned as follows:

- Sliding through the vertical threaded holes in the wall plate of the swivel mount
- Turning by 360° around the longitudinal axis by fixing on the screw-on cone
- Pitching in the direction of the protective field with horizontal threaded holes in the wall mounting
- Tilting around main axis

The wall mounting through threaded holes makes it possible to lift the mounting bracket after the screws have been loosened over the connection cap. Therefore, the mounting brackets do not need to be removed from the wall when exchanging the device. Loosening the screws is sufficient.

For increased mechanical loads, mounting brackets are also available in a vibration-damped version (BT-2HF-S) (see chapter 15 "Order guide and accessories").

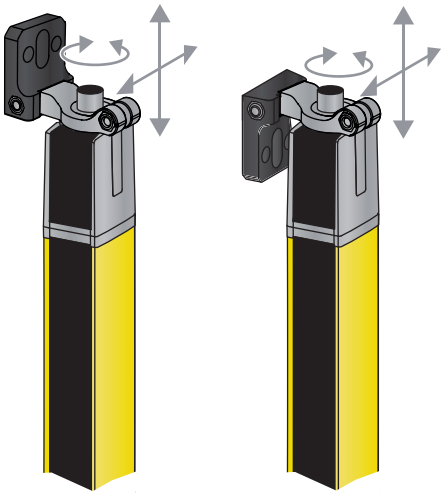

Fig. 6.8: Mounting via swivel mount BT-2HF

6.2.5 Fastening via BT-2SB10 swiveling mounting brackets

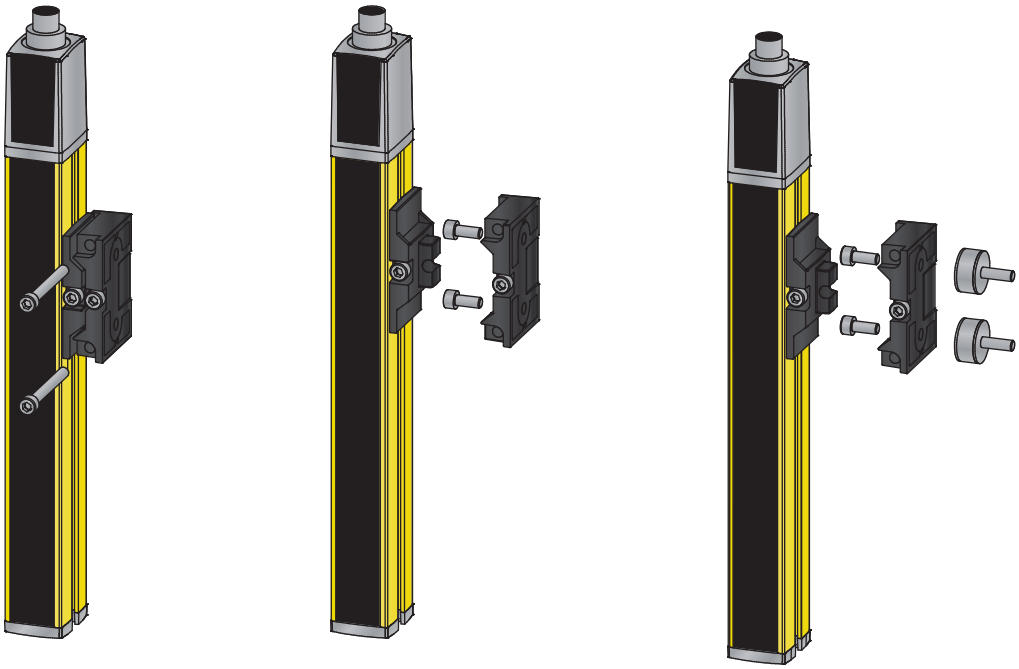

Fig. 6.9: Mounting via swiveling mounting brackets BT-2SB10

For larger protective field heights > 900 mm, the use of the BT-2SB10 swiveling mounting brackets is recommended (see chapter 15 "Order guide and accessories"). For increased mechanical requirements, these are also available as vibration-damped version (BT-2SB10-S). Depending on the installation situation, environmental conditions and protective field length (> 1200 mm), other mounting brackets may also be necessary.

6.2.6 One-sided mounting on the machine table

The safety sensor can be mounted directly on the machine table via an M5 screw on the blind hole in the end cap. On the other end, a BT-2HF swivel mount can be used, for example, so that turning movements for alignment are possible despite the fact that the sensor is mounted on one side. The full resolution of the safety sensor is thus preserved on all points of the protective field down to the machine table.

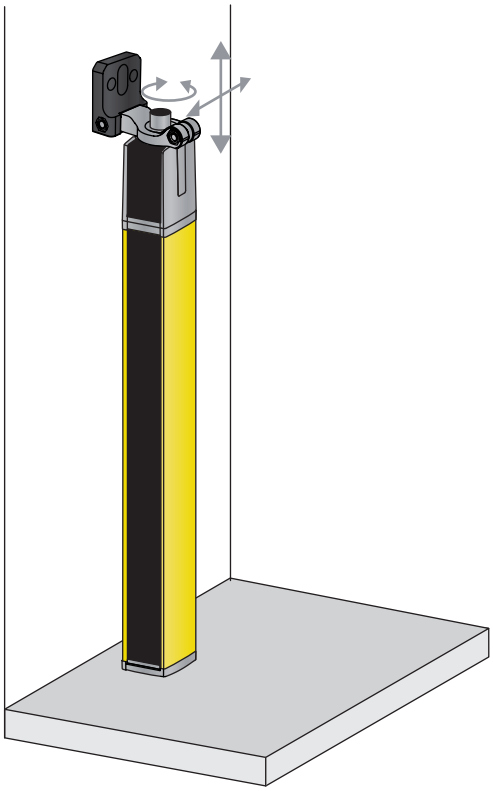

Fig. 6.10: Mounting directly on the machine table

WARNING	
	Impairment of the protective function due to reflections on the machine table! ↳ Make sure that reflections on the machine table are prevented reliably. ↳ After mounting and every day after that, check the detection capability of the safety sensor in the entire protective field using a test rod (see chapter 9.3.1 "Checklist – periodically by the operator").

6.3 Mounting accessories

6.3.1 Deflecting mirror for multiple-side guarding

For multiple-side guarding, redirecting the protective field with one or two deflecting mirrors is economical. To do this, Leuze electronic supplies:

- The UM60 deflecting mirror for mounting on the machine in various lengths (see chapter 15 "Order guide and accessories")
- suitable BT-2UM60 swivel mounts
- UMC-1000-S2 … UMC-1900-S2 deflecting mirror columns with spring-damped base for free-standing floor mounting

The range is reduced by approx. 10 % per deflection. A laser alignment aid with red light laser is recommended for the alignment of transmitter and receiver (see chapter 8.3 "Aligning of deflecting mirrors with the laser alignment aid").

↳ Note that the distance between the transmitter and the first deflecting mirror cannot be larger than 3 m.

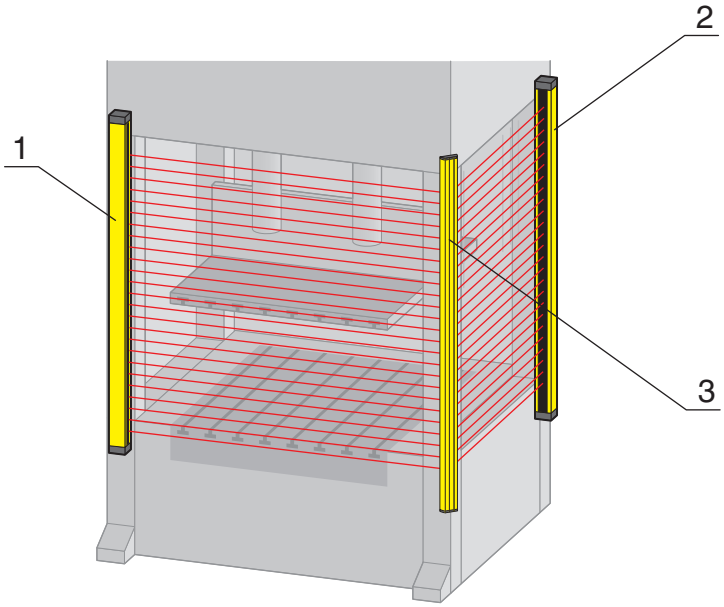

1 Transmitter
2 Receiver
3 UM60 deflecting mirrors

Fig. 6.11: Arrangement with deflecting mirror for 2-side guarding of a point of operation

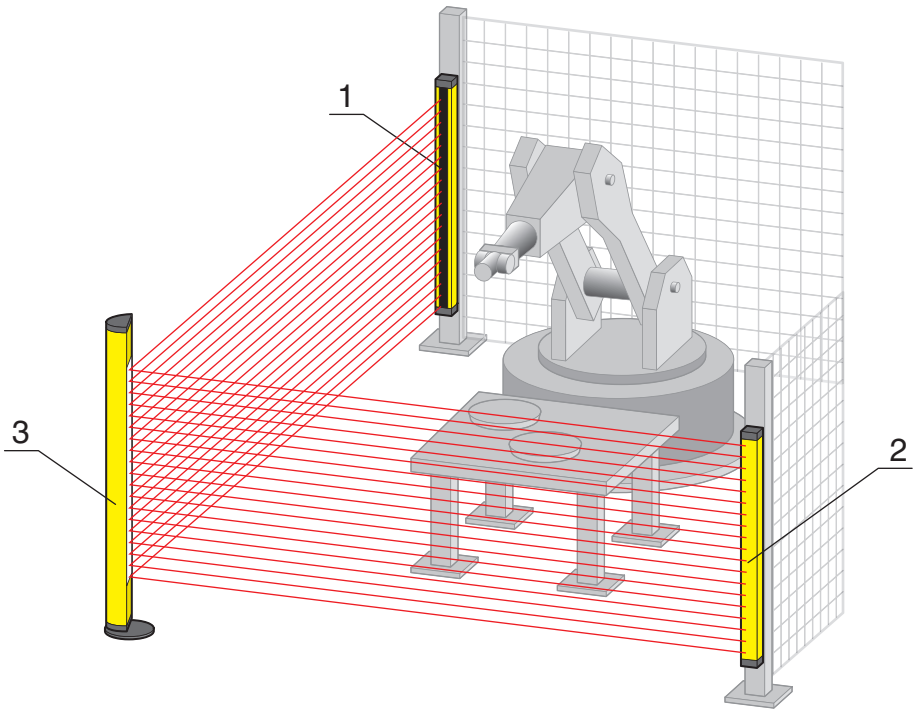

1 Transmitter
2 Receiver
3 UMC deflecting mirror columns

Fig. 6.12: Arrangement with deflecting mirror columns for two-side guarding of a point of operation

6.3.2 MLC-PS protective screen

If there is a risk that the protective plastic screens of the safety sensors could get damaged, e.g. by welding sparks, placing the additional, easy-to-replace MLC-PS protective screen in front of the safety sensors can protect the device protective screen and considerably increase the availability of the safety sensor. Mounting is performed using special clamp brackets, which are fastened on the lateral slot, via an Allen screw accessible from the front on each. The range of the safety sensor is reduced by approx. 5%; when protective screens are used on the transmitter and the receiver it is reduced by 10%. Mounting bracket sets with 2 and 3 clamp brackets are available.

	NOTICE
	If the length equals 1200 mm or higher, 3 clamp brackets are recommended.

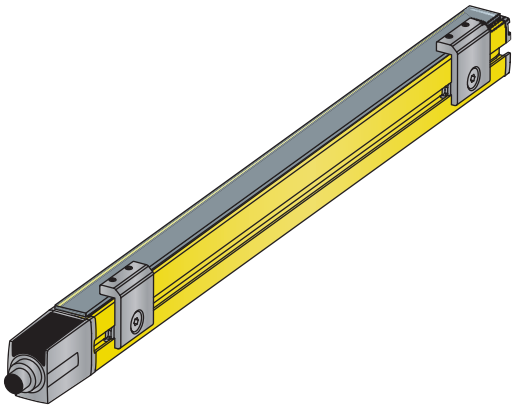

Fig. 6.13: MLC-PS protective screen fastened with MLC-2PSF clamp bracket

7 Electrical connection

WARNING

Faulty electrical connection or improper function selection may result in serious injury!

- Only allow qualified persons (see chapter 2.2 "Necessary competencies") to perform the electrical connection.
- Make certain that the safety sensor is protected against overcurrent.
- For access guarding, activate the start/restart interlock and make certain that it cannot be unlocked from within the danger zone.
- Select the functions so that the safety sensor can be used as intended (see chapter 2.1 "Intended use and foreseeable misuse").
- Select the safety-relevant functions for the safety sensor (see chapter 4 "Functions").
- Always loop both safety-related switching outputs OSSD1 and OSSD2 into the work circuit of the machine.
- Signal outputs must not be used for switching safety-relevant signals.

NOTICE

SELV/PELV!

- Acc. to EN 60204-1, the external power supply must demonstrate the ability to bridge short-term mains failures of up to 20 ms. The power supply unit must ensure safe mains separation (SELV/PELV) and a current reserve of at least 2 A.

NOTICE

Laying cables!

- Lay all connection cables and signal lines within the electrical installation space or permanently in cable ducts.
- Lay the cables and lines so that they are protected against external damages.
- For further information: see ISO 13849-2, Table D.4.

NOTICE

For special EMC stress, the use of shielded cables is recommended.

7.1 Pin assignment transmitter and receiver

7.1.1 MLC 300 transmitter

MLC 300 transmitters are equipped with a 5-pin M12 connector.

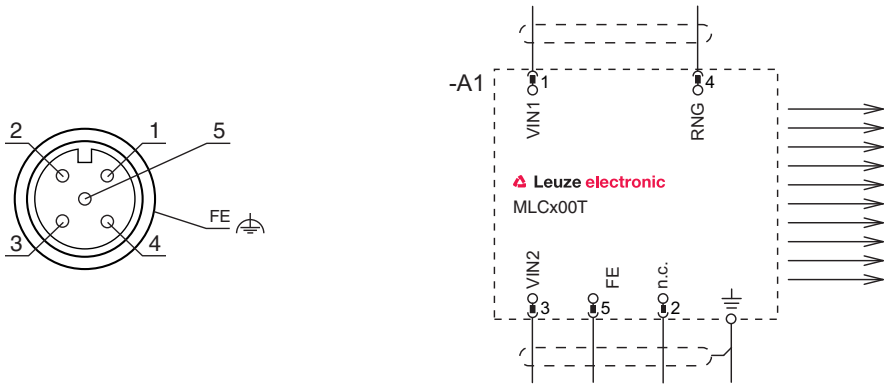

Fig. 7.1: Pin assignment and connection diagram transmitter

Tab. 7.1: Pin assignment transmitter

Pin	Core color (CB-M12-xx000E-5GF)	Transmitter
1	Brown	VIN1 - supply voltage
2	White	n.c.
3	Blue	VIN2 - supply voltage
4	Black	RNG - range
5	Gray	FE - functional earth, shield
FE		FE - functional earth, shield

The polarity of the supply voltage selects the transmission channel of the transmitter:

- VIN1 = +24 V, VIN2 = 0 V: transmission channel C1
- VIN1 = 0 V, VIN2 = +24 V: transmission channel C2

The wiring of pin 4 determines the transmitting power and thereby the range:

- Pin 4 = +24 V: standard range
- Pin 4 = 0 V or open: reduced range

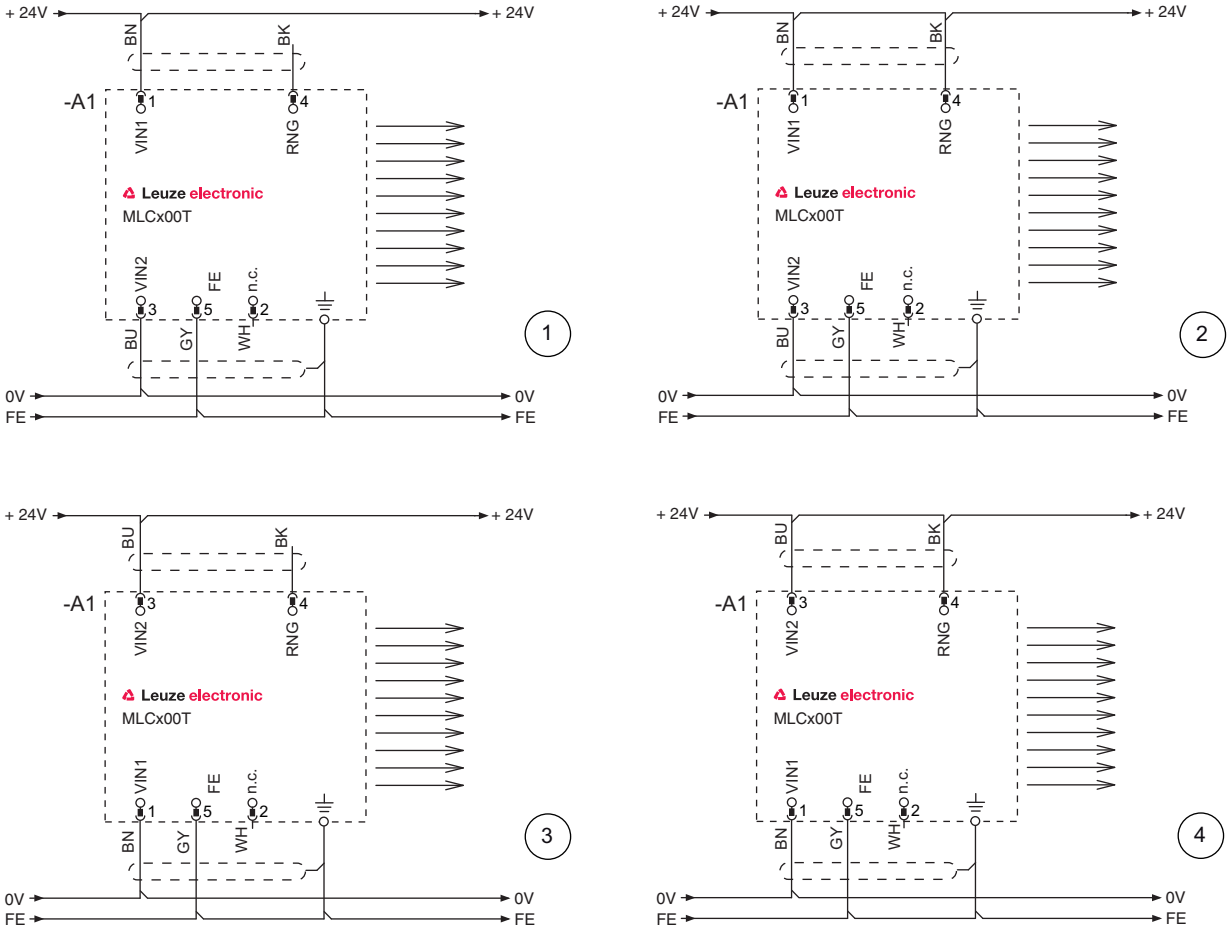

Fig. 7.2: Connection examples transmitter

7.1.2 MLC 310 receiver

MLC 310 receivers are equipped with a 5-pin M12 connector.

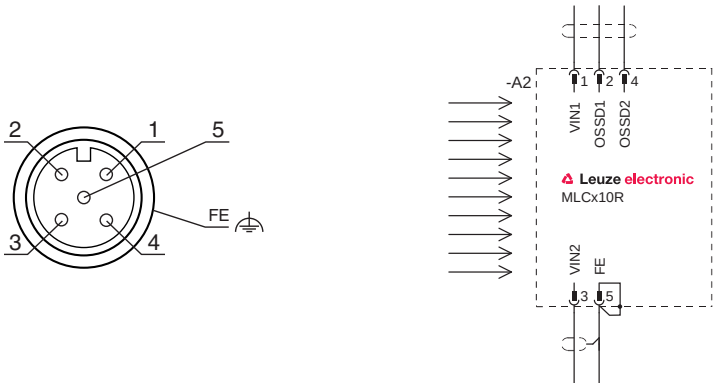

Fig. 7.3: Pin assignment and connection diagram receiver

Tab. 7.2: Pin assignment receiver

Pin	Core color (CB-M12-xx000E-5GF)	Receiver
1	Brown	VIN1 - supply voltage
2	White	OSSD1 - safety-related switching output
3	Blue	VIN2 - supply voltage
4	Black	OSSD2 - safety-related switching output
5	Gray	FE - functional earth, shield Wired in device interior on the housing
FE		FE - functional earth, shield

The polarity of the supply voltage selects the transmission channel of the receiver:

- VIN1 = +24 V, VIN2 = 0 V: transmission channel C1
- VIN1 = 0 V, VIN2 = +24 V: transmission channel C2

7.2 Circuit diagram examples

7.2.1 MLC 310 circuit diagram example

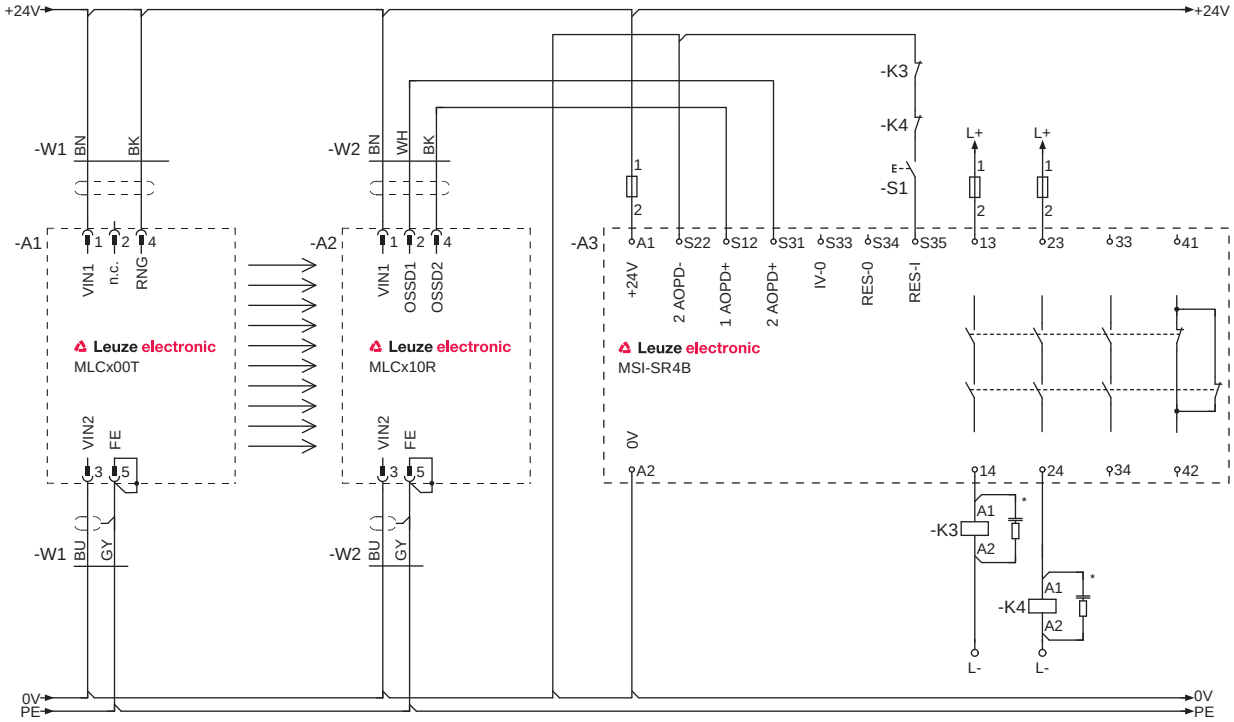

Fig. 7.4: Circuit diagram example with downstream MSI-SR4B safety relay

8 Starting up the device

WARNING

Improper use of the safety sensor may result in serious injury!

- Make certain that the entire device and the integration of the optoelectronic protective device were inspected by qualified and instructed persons (see chapter 2.2 "Necessary competencies").
- Make certain that a dangerous process can only be started while the safety sensor is switched on.

Prerequisites:

- Safety sensor mounted (see chapter 6 "Mounting") and connected (see chapter 7 "Electrical connection") correctly
- Operating personnel were instructed in proper use
- Dangerous process is switched off, outputs of the safety sensor are disconnected, and the system is protected against being switched back on
- After start-up, check the function of the safety sensor (see chapter 9.1 "Before commissioning and following modifications").

8.1 Switching on

Requirements for the supply voltage (power supply unit):

- Reliable mains separation is ensured.
- Current reserve of at least 2 A is available.
- Switch on the safety sensor.
- ⇨ The safety sensor performs a self test.

Check operational readiness of sensor

- Check whether LED1 is permanently lit green or red (see chapter 3.3.2 "Operating indicators on the MLC 310 receiver").
- ⇨ The safety sensor is ready for use.

8.2 Aligning the sensor

NOTICE

Faulty or incorrect alignment may result in an operating fault!

- The alignment performed during start-up should only be performed by qualified persons (see chapter 2.2 "Necessary competencies").
- Observe the data sheets and mounting instructions of the individual components.

Prealignment

Fasten the transmitter and receiver in a vertical or horizontal position and at the same height so that

- the front screens are directed at each other.
- the transmitter and receiver connections point in the same direction.
- the transmitter and receiver are arranged parallel to each other, i.e. they are the same distance from each other at the beginning and end of the device.

Alignment can be performed with a clear protective field by observing the LEDs (see chapter 3.3 "Display elements").

- Loosen the screws on the mounting brackets or device columns.

NOTICE

Loosen the screws only enough so that the devices can just be moved.

- Turn the receiver to the left until LED1 still flashes green but does not yet illuminate red. If necessary, you may have to turn the transmitter beforehand.
- Note the value of the twist angle.
- Turn the receiver to the right until LED1 still flashes green but does not yet illuminate red.
- Note the value of the twist angle.
- Set the optimum position of the receiver. This lies in the middle of the two values for the twist angle to the left and right.
- Tighten the fastening screws of the receiver.
- Now align the transmitter according to the same method, paying attention to the display elements of the receiver while doing so (see chapter 3.3.2 "Operating indicators on the MLC 310 receiver").

	NOTICE
	Separate alignment aids such as the AC-ALM are also available as accessories.

8.3 Aligning of deflecting mirrors with the laser alignment aid

When using deflecting mirrors for multiple-side point of operation guarding and access guarding, an external laser alignment aid is recommended (see chapter 15 "Order guide and accessories").

	NOTICE
	With its clearly visible red light spot, the external laser alignment aid facilitates the correct setting of the transmitter and receiver as well as the deflecting mirrors.

- Fasten the laser alignment aid on top on the side groove of the transmitter. Mounting instructions are included in the accessories.
- Switch on the laser. Take note of the operating instructions of the laser alignment aid concerning the safety notices and the activation of the laser alignment aid.
- Loosen the mounting bracket of the transmitter and turn or tilt or pitch the device so that the laser spot strikes the top of the first deflecting mirror (see chapter 6.2.2 "Definition of directions of movement").
- Now set the laser below on the transmitter and adjust it so that the laser spot strikes the bottom of the deflecting mirror.
- Now set the laser back up top on the transmitter and check if the laser spot still strikes the top of the deflecting mirror. If it does not, the mounting height of the transmitter must be changed, if applicable.
- Repeat the process until the laser strikes the respective point of the deflecting mirror, both on top and on bottom.
- Turn, tilt or pitch the deflecting mirror so that the laser spot strikes either the next deflecting mirror or the receiver in both positions.
- Repeat the process in reverse after setting the laser alignment aid above and below on the receiver. The laser beam must strike the transmitter in both cases if the receiver has been correctly aligned.
- Remove the laser alignment aid from the safety sensor.
- ⇨ The protective field is free. LED1 on the receiver is permanently lit green. The OSSDs switch on.

9 Testing

NOTICE

- Safety sensors must be replaced at the end of their mission time (see chapter 14 "Technical data").
- Always exchange entire safety sensors.
- Observe any nationally applicable regulations regarding the tests.
- Document all tests in a comprehensible manner and include the configuration of the safety sensor along with the data for the safety- and minimum distances in the documentation.

9.1 Before commissioning and following modifications

WARNING

Unpredictable machine behavior during start-up may result in serious injury!

- Make certain that there are no people in the danger zone.

- Before they begin work, train the operators on their respective tasks. The training is the responsibility of the operating company.
- Attach notes regarding daily testing in the respective national language of the operator on the machine in a highly visible location, e.g. by printing out the corresponding chapter (see chapter 9.3 "Periodically by the operator").
- Test the electrical function and installation according to this document.

Acc. to IEC 62046 and national regulations (e.g. EU directive 2009/104/EC), tests are to be performed by competent persons (see chapter 2.2 "Necessary competencies") in the following situations:

- Prior to commissioning
- Following modifications to the machine
- After longer machine downtime
- Following retrofitting or new configuration of the machine

- As preparation, check the most important criteria for the safety sensor according to the following check-list (see chapter 9.1.1 "Checklist for integrator – to be performed prior to commissioning and following modifications"). Completing the checklist does not replace testing by competent persons (see chapter 2.2 "Necessary competencies")!
- ⇨ Not until proper function of the safety sensor is ascertained may it be integrated in the control circuit of the system.

9.1.1 Checklist for integrator – to be performed prior to commissioning and following modifications

NOTICE

Completing the checklist does not replace testing by a qualified person (see chapter 2.2 "Necessary competencies")!

- If you answer one of the items on the following check list with **no**, the machine must no longer be operated.
- IEC 62046 contains additional recommendations on testing protective devices.

Tab. 9.1: Checklist for integrator – to be performed prior to the initial start-up and following modifications

Check:	Yes	No	not applicable
Is the safety sensor operated acc. to the specific environmental conditions that are to be maintained (see chapter 14 "Technical data")?			
Is the safety sensor correctly aligned and are all fastening screws and connectors secure?			

Check:	Yes	No	not applicable
Are safety sensor, connection cables, connectors, protection caps and command devices undamaged and without any sign of manipulation?			
Does the safety sensor satisfy the required safety level (PL, SIL, category)?			
Are both safety-related switching outputs (OSSDs) integrated in the downstream machine control acc. to the required safety category?			
Are switching elements that are controlled by the safety sensor monitored according to the required safety level (PL, SIL, category) (e.g., contactors through EDM)?			
Are all points of operation near the safety sensor accessible only through the protective field of the safety sensor?			
Are the necessary additional protective devices in the immediate surroundings (e.g., safety guard) properly mounted and secured against tampering?			
If it is possible to be present undetected between the safety sensor and point of operation: is an assigned start/restart interlock functional?			
Is the command device for unlocking the start/restart interlock mounted in such a way that it cannot be reached from within the danger zone and so that the complete danger zone can be seen from the installation location?			
Has the maximum stopping time of the machine been measured and documented?			
Is the required safety distance maintained?			
Does interruption with a test object intended for this purpose cause the dangerous movement(s) to stop?			
Is the safety sensor effective during the entire dangerous movement(s)?			
Is the safety sensor effective in all relevant operating modes of the machine?			
Is start-up of dangerous movements reliably prevented if an active light beam or the protective field is interrupted with a test object intended for this purpose?			
Was the sensor detection capacity successfully tested (see chapter 9.3.1 "Checklist – periodically by the operator")?			
Were distances to reflective surfaces taken into account during configuration and no reflection bypasses subsequently detected?			
Are notices for regular testing of the safety sensor legible to the operator and are they located in a highly visible location?			
Are changes to the safety function (e.g. SPG, blanking, protective field switchover) not easy to achieve through tampering?			
Are settings that could result in an unsafe state possible only by means of key, password or tool?			
Are there incentives that pose stimulus for tampering?			
Were the operators instructed prior to starting work?			

9.2 To be performed periodically by competent persons

The reliable interaction of safety sensor and machine must be regularly tested by qualified persons (see chapter 2.2 "Necessary competencies") in order to detect changes to the machine or impermissible tampering with the safety sensor.

Acc. to IEC 62046 and national regulations (e.g., EU directive 2009/104/EC), tests of elements which are subject to wear must be performed by qualified persons (see chapter 2.2 "Necessary competencies") at regular intervals. Testing intervals may be regulated by nationally applicable regulations (recommendation acc. to IEC 62046: 6 months).

- Only allow testing to be performed by qualified persons (see chapter 2.2 "Necessary competencies").
- Observe the nationally applicable regulations and the time periods specified therein.
- As preparation, observe the checklist (see chapter 9.1 "Before commissioning and following modifications").

9.3 Periodically by the operator

The function of the safety sensor must be checked depending on the given risk according to the following checklist so that damages or prohibited tampering can be detected.

Depending on the risk assessment, the test cycle must be defined by the integrator or operating company (e.g., daily, on shift changes, ...) or is specified by national regulations or regulations of the employer's liability insurance association and may be dependent on the machine type.

Due to complex machines and processes, it may be necessary under certain circumstances to check some points at longer time intervals. Observe the classification in “Test at least” and “Test when possible”.

	NOTICE
	For larger distances between transmitter and receiver and when using deflecting mirrors, a second person may be necessary.

	WARNING
	Unpredictable machine behavior during the test may result in serious injury! - Make certain that there are no people in the danger zone. - Before they begin work, train the operators on their respective tasks and provide suitable test objects and an appropriate test instruction.

9.3.1 Checklist – periodically by the operator

NOTICE

↳ If you answer one of the items on the following check list with **no**, the machine must no longer be operated.

Tab. 9.2: Checklist – regular function test by trained operators/persons

Test at least:	Yes	No
Are safety sensor and connectors securely mounted and free of obvious signs of damage, changes or tampering?		
Were no obvious changes made to access or entry possibilities?		
Test the effectiveness of the safety sensor: • The LED 1 on the safety sensor must illuminate green (see chapter 3.3.2 "Operating indicators on the MLC 310 receiver"). • Interrupt an active beam or the protective field (see figure) with a suitable, opaque test object: 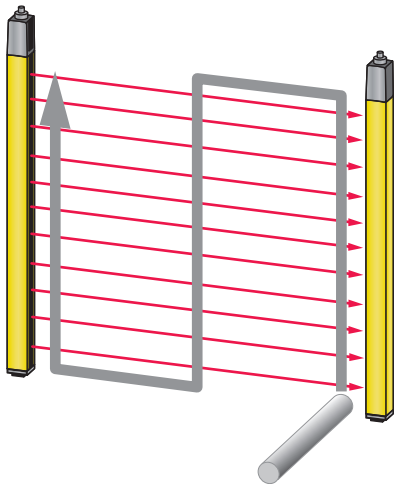 Checking the protective field function with test rod (only for safety light curtains with a resolution of 14 … 40 mm). For light curtains with different resolution ranges, this check is to be performed separately for each resolution range. • Does the OSSD LED on the receiver illuminate constantly red while the protective field is interrupted?		

When possible, test during running operation:	Yes	No
Protective device with approach function: during machine operation, the protective field is interrupted with the test object – are the obviously dangerous machine parts stopped without noticeable delay?		
Protective device with presence detection: the protective field is interrupted with the test object – does this prevent operation of the obviously dangerous machine parts?		

10 Maintenance

	NOTICE
!	**Faulty operation if transmitter and receiver are soiled!** The surfaces of the front screen of transmitters, receivers and, where applicable, deflecting mirror must not be scratched or roughened at the positions where beams enter and exit. ↳ Do not use chemical cleaners.

Prerequisites for cleaning:

- The system is safely shut down and protected against restart.

↳ Clean the safety sensor periodically depending on the degree of contamination.

	NOTICE
!	**Prevent electrostatic charging of the front screens!** ↳ To clean the front screens of transmitter and receiver, use only damp cloths.

11 Troubleshooting

11.1 What to do in case of failure?

After switching the safety sensor on, the display elements (see chapter 3.3 "Display elements") assist in checking the correct functionality and in faultfinding.

In case of failure, you can determine the fault from the LED displays or read a message from the 7-segment display. With the error message you can determine the cause of the error and initiate measures to rectify it.

NOTICE

If the safety sensor responds with an error display, you will often be able to eliminate the cause yourself!

- Switch off the machine and leave it switched off.
- Analyze and eliminate the cause of the fault using the following table.
- If you are unable to rectify the fault, contact the Leuze electronic branch responsible for you or call the Leuze electronic customer service (see chapter 13 "Service and support").

11.2 Operating indicators of the LEDs

Tab. 11.1: LED indicators at the transmitter - causes and measures

LED	State	Cause	Measure
LED1	OFF	Transmitter without supply voltage	Check the power supply unit and the electrical connection. Exchange the power supply unit, if applicable.
	Red	Device failed	Replace the device.

Tab. 11.2: LED indicators at the receiver - causes and measures

LED	State	Cause	Measure
LED1	OFF	Device failed	Replace the device.
	Red	Alignment incorrect or protective field interrupted	Remove all objects from the protective field. Align the transmitter and receiver to each other or place blanked objects correctly concerning size and position.
	Red (LEDs on transmitter: both green)	Receiver is set on C1, transmitter on C2	Set the transmitter and receiver on the same transmission channel and align both correctly.
	Red (LED1 on transmitter: green)	Receiver is set on C2, transmitter on C1	Remove all objects from the protective field. Align the transmitter and receiver to each other or place blanked objects correctly concerning size and position.
	Red, flashing slowly, approx. 1 Hz	External error	Check the connection of the cables and the control signals.
	Red, flashing fast, approx. 10 Hz	Internal error	If restart fails, exchange the device.
	Green, flashing slowly, approx. 1 Hz	Weak signal due to contamination or poor alignment	Clean the front screens and check the alignment of transmitter and receiver.

12 Disposing

For disposal observe the applicable national regulations regarding electronic components.

13 Service and support

24-hour on-call service at:
+49 7021 573-0

Service hotline:
+49 7021 573-123

E-mail:
service.protect@leuze.de

Return address for repairs:
Servicecenter
Leuze electronic GmbH + Co. KG
In der Braike 1
D-73277 Owen/Germany

14 Technical data

14.1 General specifications

Tab. 14.1: Protective field data

Physical resolution [mm]	Operating range [m]		Protective field height [mm]	
	min.	max.	min.	max.
20	0	15	150	1800
30	0	10	150	1800
40	0	20	150	3000
90	0	20	450	3000

Tab. 14.2: Safety-relevant technical data

Type in accordance with IEC 61496	Type 2
SIL in accordance with IEC 61508	SIL 1
SILCL in accordance with IEC 62061	SILCL 1
Performance Level (PL) in accordance with ISO 13849-1	PL c
Category in accordance with ISO 13849-1	Cat. 2
Average probability of a failure to danger per hour (PFH_d)	$5.06x10^{-8}$ 1/h
Mission time (T_M)	20 years

Tab. 14.3: General system data

Connection technology	M12, 5-pin
Supply voltage U_v, transmitter and receiver	+24 V, ± 20 %, compensation necessary at 20 ms voltage dip, min. 250 mA (+ OSSD load)
Residual ripple of the supply voltage	± 5 % within the limits of U_v
Current consumption - transmitter	50 mA
Current consumption receiver	150 mA (without load)
Common value for ext. fuse in the supply line for transmitter and receiver	2 A semi time-lag
Synchronization	Optical between transmitter and receiver
Protection class	III
Degree of protection	IP65
Ambient temperature, operation	0 … 55 °C
Ambient temperature, storage	-25 … 70 °C
Relative humidity (non-condensing)	0 … 95 %
Vibration resistance	50 m/s^2 acceleration, 10 - 55 Hz in acc. with IEC 60068-2-6; 0.35 mm amplitude
Shock resistance	100 m/s^2 acceleration, 16 ms acc. to IEC 60068-2-6
Profile cross section	29 mm x 35.4 mm
Dimensions	see chapter 14.2 "Dimensions, weight, response time"
Weight	see chapter 14.2 "Dimensions, weight, response time"

Tab. 14.4: System data - transmitter

Light source	LED; exempt group in acc. with IEC 62471
Wavelength	940 nm
Pulse duration	800 ns
Pulse pause	1.9 µs (min.)
Mean power	<50 µW
Input current pin 4 (range)	Against +24 V: 10 mA Against 0 V: 10 mA

Tab. 14.5: Technical data of the electronic safety-related switching outputs (OSSDs) on the receiver

Safety-related PNP transistor outputs (short-circuit monitored, cross-circuit monitored)	**Minimum**	**Typical**	**Maximum**
Switching voltage high active (U_v - 1.5V)	18 V	22.5 V	27 V
Switching voltage low		0 V	+2.5 V
Switching current		300 mA	380 mA
Residual current		<2 µA	200 µA [a)]
Load capacity			0.3 µF
Load inductivity			2 H
Permissible wire resistance for load			<200 Ω [b)]
Permissible wire cross section		0.25 mm^2	
Permissible cable length between receiver and load			100 m
Test pulse width		60 µs	340 µs
Test pulse distance	(5 ms)	60 ms	
OSSD restart delay time after beam interruption		100 ms	

a) In the event of a failure (if the 0 V cable is interrupted), each of the outputs behaves as a 120 kΩ resistor to U_v. A downstream safety PLC must not detect this as a logical "1".

b) Note the additional restrictions due to cable length and load current.

NOTICE

The safety-related transistor outputs perform the spark extinction. With transistor outputs, it is therefore neither necessary nor permitted to use the spark extinction circuits recommended by contactor or valve manufacturers (RC elements, varistors or recovery diodes), since these considerably extend the decay times of inductive switching elements.

Tab. 14.6: Patents

US patents	US 6,418,546 B

14.2 Dimensions, weight, response time

Dimensions, weight and response time are dependent on

- the resolution
- the length

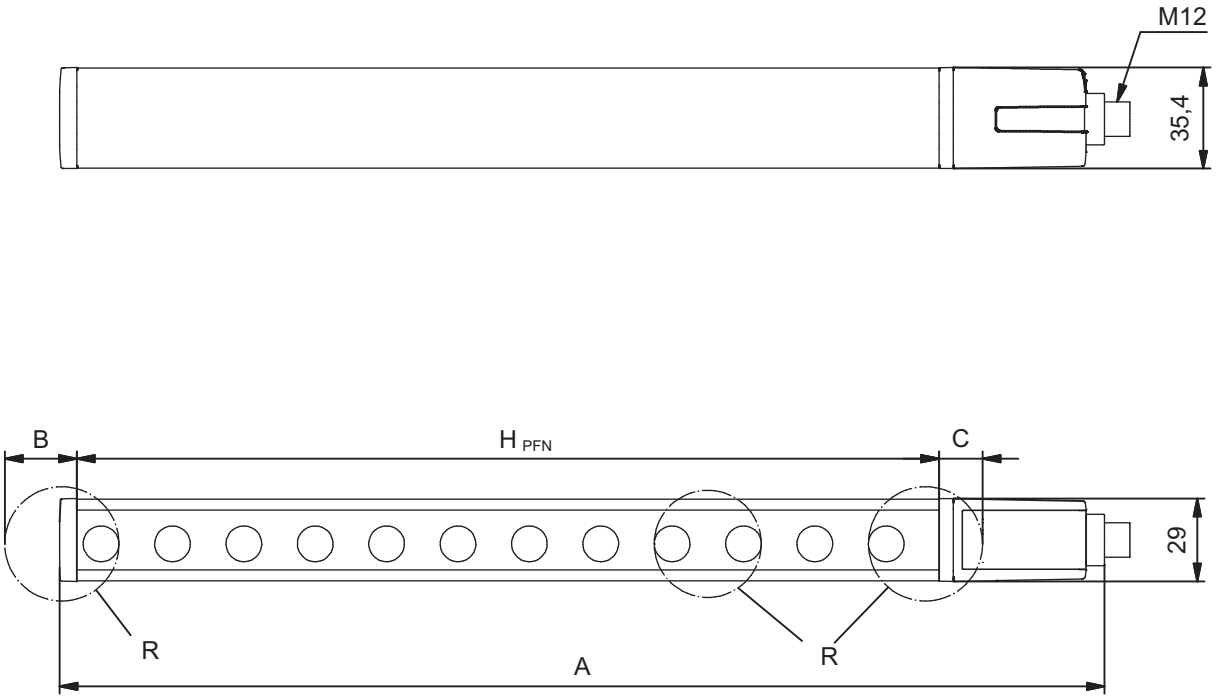

Fig. 14.1: Dimensions of transmitter and receiver

Effective protective field height H_{PFE} goes beyond the dimensions of the optics area to the outer borders of the circles labeled with R.

Calculation of the effective protective field height

$$H_{PFE} = H_{PFN} + B + C$$

H_{PFE}	[mm]	=	Effective protective field height
H_{PFN}	[mm]	=	Rated protective field height, this corresponds to the length of the yellow housing part (see tables below)
A	[mm]	=	Total height
B	[mm]	=	Additional dimensions for calculation of the effective protective field height (see table below)
C	[mm]	=	Value for calculating the effective protective field height (see tables below)

Tab. 14.7: Dimensions (nominal protective field height), weight and response time

Device type	Transmitter and receiver			Receiver			
	Dimensions [mm]		Weight [kg]	Response time [ms] acc. to resolution			
Type	H_{PFN}	A		20 mm	30 mm	40 mm	90 mm
MLC…-150	150	216	0.30	4	3	3	-
MLC…-225	225	291	0.37	5	3	3	-
MLC…-300	300	366	0.45	7	4	4	-
MLC…-450	450	516	0.60	9	5	5	3
MLC…-600	600	666	0.75	12	7	7	3
MLC…-750	750	816	0.90	14	8	8	4
MLC…-900	900	966	1.05	17	9	9	4

Device type	Transmitter and receiver			Receiver			
	Dimensions [mm]		Weight [kg]	Response time [ms] acc. to resolution			
Type	H_{PFN}	A		20 mm	30 mm	40 mm	90 mm
MLC…-1050	1050	1116	1.20	19	10	10	4
MLC…-1200	1200	1266	1.35	22	12	12	5
MLC…-1350	1350	1416	1.50	24	13	13	5
MLC…-1500	1500	1566	1.65	26	14	14	6
MLC…-1650	1650	1716	1.80	29	15	15	6
MLC…-1800	1800	1866	1.95	31	17	17	7
MLC…-1950	1950	2016	2.10	34	18	18	7
MLC…-2100	2100	2166	2.25	36	19	19	7
MLC…-2400	2400	2466	2.55	41	22	22	8
MLC…-2700	2700	2766	2.85	46	24	24	9
MLC…-3000	3000	3066	3.15	51	26	26	10

Tab. 14.8: Additional dimensions for calculating the effective protective field height

R = resolution	B	C
20 mm	7 mm	10 mm
30 mm	19 mm	9 mm
40 mm	25 mm	15 mm
90 mm	50 mm	40 mm

14.3 Dimensioned drawings: Accessories

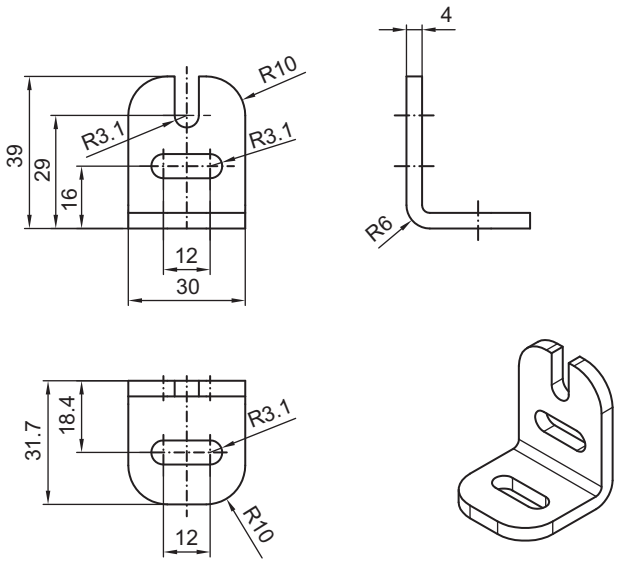

Fig. 14.2: BT-L mounting bracket

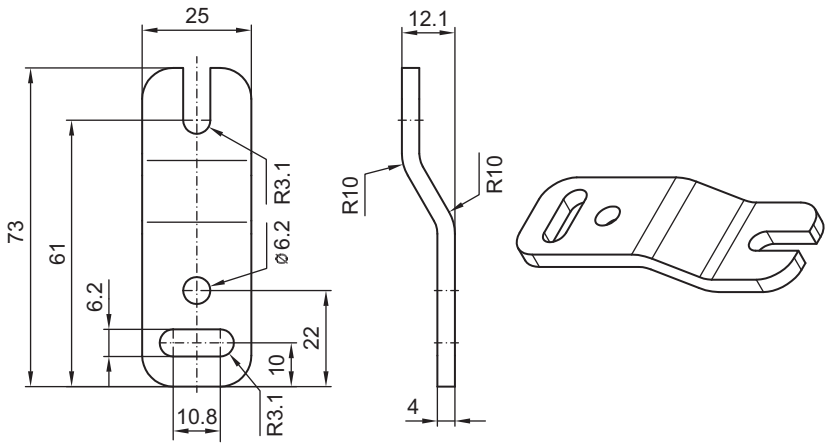

Fig. 14.3: BT-Z parallel bracket

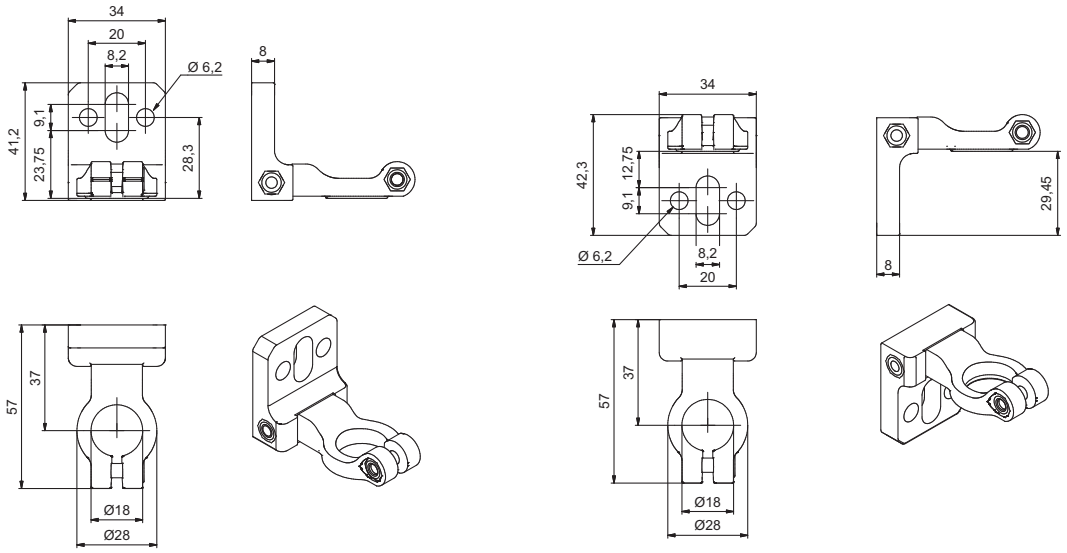

Fig. 14.4: Swivel mount BT-2HF

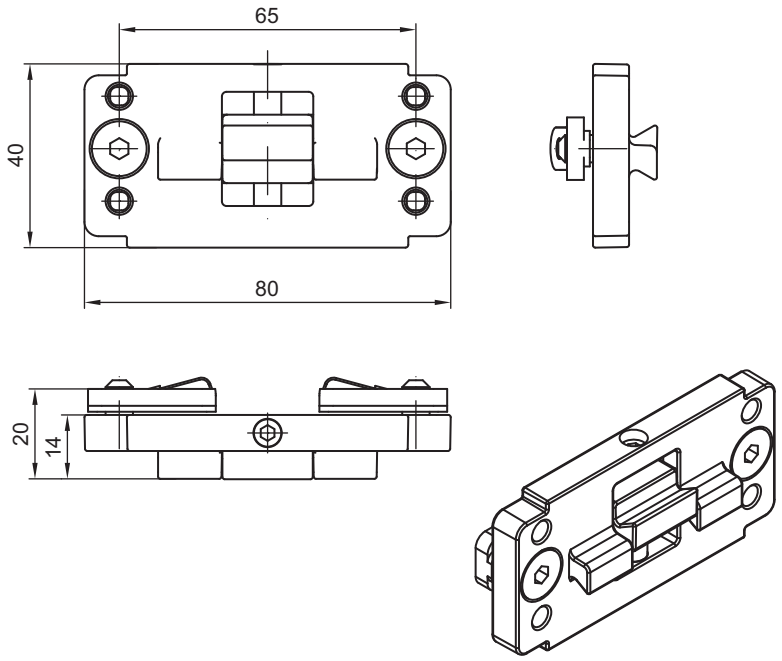

Fig. 14.5: BT-P40 clamp bracket for mounting in UDC device columns

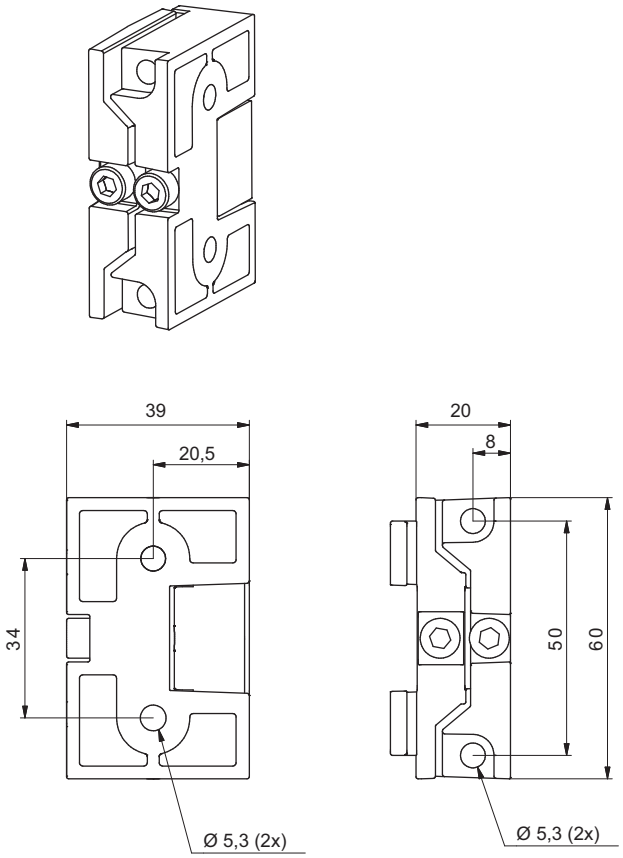

Fig. 14.6: Swiveling mounting bracket BT-2SB10

15 Order guide and accessories

Nomenclature

Part designation:

MLCxyy-za-hhhhei-ooo

Tab. 15.1: Part number code

MLC	Safety sensor
x	Series: 3 for MLC 300
x	Series: 5 for MLC 500
yy	Function classes: 00: Transmitter 01: transmitter (AIDA) 02: Transmitter with test input 10: Basic receiver - automatic restart 11: basic receiver - automatic restart (AIDA) 20: Standard receiver - EDM/RES selectable 30: Extended receiver - blanking/muting
z	Device type: T: transmitter R: receiver
a	Resolution: 14: 14 mm 20: 20 mm 30: 30 mm 40: 40 mm 90: 90 mm
hhhh	Protective field height: 150 … 3000: from 150 mm to 3000 mm
e	Host/Guest (optional): H: Host MG: Middle Guest G: Guest
i	Interface (optional): /A: AS-i
ooo	Option: EX2: explosion protection (zones 2 + 22) /V: high Vibration-proof SPG: Smart Process Gating

Tab. 15.2: Part descriptions, examples

Examples for part designation	Properties
MLC300T20-600	Type 2 transmitter, PL c, SIL 1, resolution 20 mm, protective field height 600 mm
MLC300T30-900	Type 2 transmitter, PL c, SIL 1, resolution 30 mm, protective field height 900 mm
MLC310R90-1500	Type 2 Basic receiver, PL c, SIL 1, resolution 90 mm, protective field height 1500 mm

Scope of delivery

- Transmitter including 2 sliding blocks, 1 instruction sheet
- Receiver including 2 sliding blocks, 1 self-adhesive notice sign “Important notices and notices for the machine operator”, 1 set of connecting and operating instructions (PDF file on CD-ROM)

Tab. 15.3: Part numbers of MLC 300 transmitter depending on resolution and protective field height

Protective field height hhhh [mm]	20 mm MLC300T20-hhhh	30 mm MLC300T30-hhhh	40 mm MLC300T40-hhhh	90 mm MLC300T90-hhhh
150	68090201	68090301	68090401	-
225	68090202	68090302	68090402	-
300	68090203	68090303	68090403	-
450	68090204	68090304	68090404	68090904
600	68090206	68090306	68090406	68090906
750	68090207	68090307	68090407	68090907
900	68090209	68090309	68090409	68090909
1050	68090210	68090310	68090410	68090910
1200	68090212	68090312	68090412	68090912
1350	68090213	68090313	68090413	68090913
1500	68090215	68090315	68090415	68090915
1650	68090216	68090316	68090416	68090916
1800	68090218	68090318	68090418	68090918
1950	-	-	68090419	68090919
2100	-	68090321	68090421	68090921
2400	-	-	68090424	68090924
2700	-	-	68090427	68090927
3000	-	-	68090430	68090930

Tab. 15.4: Part numbers of MLC 310 receiver depending on resolution and protective field height

Protective field height hhhh [mm]	20 mm MLC310R20-hhhh	30 mm MLC310R30-hhhh	40 mm MLC310R40-hhhh	90 mm MLC310R90-hhhh
150	68091201	68091301	68091401	-
225	68091202	68091302	68091402	-
300	68091203	68091303	68091403	-
450	68091204	68091304	68091404	68091904
600	68091206	68091306	68091406	68091906

Protective field height hhhh [mm]	20 mm MLC310R20-hhhh	30 mm MLC310R30-hhhh	40 mm MLC310R40-hhhh	90 mm MLC310R90-hhhh
750	68091207	68091307	68091407	68091907
900	68091209	68091309	68091409	68091909
1050	68091210	68091310	68091410	68091910
1200	68091212	68091312	68091412	68091912
1350	68091213	68091313	68091413	68091913
1500	68091215	68091315	68091415	68091915
1650	68091216	68091316	68091416	68091916
1800	68091218	68091318	68091418	68091918
1950	-	-	68091419	68091919
2100	-	68091321	68091421	68091921
2400	-	-	68091424	68091924
2700	-	-	68091427	68091927
3000	-	-	68091430	68091930

Tab. 15.5: Accessories

Part no.	Article	Description
Connection cables for MLC 300 **transmitter and** MLC 310 **receiver, shielded**		
50133860	KD S-M12-5A-P1-050	Connection cable, 5-pin, 5 m long
50133861	KD S-M12-5A-P1-100	Connection cable, 5-pin, 10 m long
678057	CB-M12-15000E-5GF	Connection cable, 5-pin, 15 m long
678058	CB-M12-25000E-5GF	Connection cable, 5-pin, 25 m long
50137013	KD S-M12-5A-P1-500	Connection cable, 5-pin, 50 m long
Connection cables for MLC 300 **transmitter and** MLC 310 **receiver, unshielded**		
50133841	KD U-M12-5A-P1-050	Connection cable, 5-pin, 5 m long
50132534	KD U-M12-5A-P1-100	Connection cable, 5-pin, 10 m long
429088	CB-M12-15000-5GF	Connection cable, 5-pin, 15 m long
429089	CB-M12-25000-5GF	Connection cable, 5-pin, 25 m long
429281	CB-M12-50000-5GF	Connection cable, 5-pin, 50 m long
User-configurable connectors for MLC 300 **transmitter and** MLC 310 receiver		
429175	CB-M12-5GF	Cable socket, 5-pin, metal housing, shield on housing
Mounting technology		
429056	BT-2L	L mounting bracket, 2x
429057	BT-2Z	Z mounting bracket, 2x
429393	BT-2HF	360° swivel mount, 2x incl. 1 MLC cylinder
429394	BT-2HF-S	360° swivel mount, vibration-damped, 2x incl. 1 MLC cylinder
424417	BT-2P40	Mounting set, consisting of 2x BT-P40 clamp brackets, for mounting in UDC-S2 device column
424422	BT-2SB10	Swiveling mounting bracket for groove mounting, ± 8°, 2x

Part no.	Article	Description
424423	BT-2SB10-S	Swiveling mounting bracket for groove mounting, ± 8°, vibration damped, 2x
425740	BT-10NC60	Sliding block with M6 thread, 10 x
425741	BT-10NC64	Sliding block with M6 and M4 thread, 10 x
425742	BT-10NC65	Sliding block with M6 and M5 thread, 10 x
Device columns		
549855	UDC-900-S2	Device column, U-shaped, profile height 900 mm
549856	UDC-1000-S2	Device column, U-shaped, profile height 1000 mm
549852	UDC-1300-S2	Device column, U-shaped, profile height 1300 mm
549853	UDC-1600-S2	Device column, U-shaped, profile height 1600 mm
549854	UDC-1900-S2	Device column, U-shaped, profile height 1900 mm
549857	UDC-2500-S2	Device column, U-shaped, profile height 2500 mm
Deflecting mirror columns		
549780	UMC-1000-S2	Continuous deflecting mirror column 1000 mm
549781	UMC-1300-S2	Continuous deflecting mirror column 1300 mm
549782	UMC-1600-S2	Continuous deflecting mirror column 1600 mm
549783	UMC-1900-S2	Continuous deflecting mirror column 1900 mm
Deflecting mirror		
529601	UM60-150	Deflecting mirror, mirror length 210 mm
529603	UM60-300	Deflecting mirror, mirror length 360 mm
529604	UM60-450	Deflecting mirror, mirror length 510 mm
529606	UM60-600	Deflecting mirror, mirror length 660 mm
529607	UM60-750	Deflecting mirror, mirror length 810 mm
529609	UM60-900	Deflecting mirror, mirror length 960 mm
529610	UM60-1050	Deflecting mirror, mirror length 1110 mm
529612	UM60-1200	Deflecting mirror, mirror length 1260 mm
529613	UM60-1350	Deflecting mirror, mirror length 1410 mm
529615	UM60-1500	Deflecting mirror, mirror length 1560 mm
529616	UM60-1650	Deflecting mirror, mirror length 1710 mm
529618	UM60-1800	Deflecting mirror, mirror length 1860 mm
430105	BT-2UM60	Mounting bracket for UM60, 2x
Protective screens		
347070	MLC-PS150	Protective screen, length 148 mm
347071	MLC-PS225	Protective screen, length 223 mm
347072	MLC-PS300	Protective screen, length 298 mm
347073	MLC-PS450	Protective screen, length 448 mm
347074	MLC-PS600	Protective screen, length 598 mm
347075	MLC-PS750	Protective screen, length 748 mm
347076	MLC-PS900	Protective screen, length 898 mm
347077	MLC-PS1050	Protective screen, length 1048 mm
347078	MLC-PS1200	Protective screen, length 1198 mm

Part no.	Article	Description
347079	MLC-PS1350	Protective screen, length 1348 mm
347080	MLC-PS1500	Protective screen, length 1498 mm
347081	MLC-PS1650	Protective screen, length 1648 mm
347082	MLC-PS1800	Protective screen, length 1798 mm
429038	MLC-2PSF	Mounting device for MLC protective screen, 2 x
429039	MLC-3PSF	Mounting device for MLC protective screen, 3 x
Laser alignment aids		
560020	LA-78U	External laser alignment aid
520004	LA-78UDC	External laser alignment aid for fastening in Device Column
520101	AC-ALM-M	Alignment aid
Test rods		
349945	AC-TR14/30	Test rod 14/30 mm
349939	AC-TR20/40	Test rod 20/40 mm

16 EU/EC Declaration of Conformity

SMART
SENSOR
BUSINESS

Leuze electronic
the sensor people

EU-/EG-KONFORMITÄTS-ERKLÄRUNG	EU/EC DECLARATION OF CONFORMITY	DECLARATION UE/CE DE CONFORMITE
Hersteller:	Manufacturer:	Constructeur:
	Leuze electronic GmbH + Co. KG In der Braike 1, PO Box 1111 73277 Owen, Germany	
Produktbeschreibung:	Description of product:	Description de produit:
Sicherheits- Lichtvorhang, Berührungslos wirkende Schutzeinrichtung, Sicherheitsbauteil nach 2006/42/EG Anhang IV MLC 300, MLC 500 Seriennummer siehe Typschild	**Safety Light Curtain, Active opto-electronic protective device, safety component in acc. with 2006/42/EC annex IV MLC 300, MLC 500 Serial no. see name plates**	**Barrière immatérielle de sécurité, Equipement de protection électrosensible, Elément de sécurité selon 2006/42/CE annexe IV MLC 300, MLC 500 N° série voir plaques signalétiques**
Die alleinige Verantwortung für die Ausstellung dieser Konformitätserklärung trägt der Hersteller.	This declaration of conformity is issued under the sole responsibility of the manufacturer.	La présente déclaration de conformité est établie sous la seule responsabilité du fabricant.
Der oben beschriebene Gegenstand der Erklärung erfüllt die einschlägigen Harmonisierungsrechts-vorschriften der Union:	The object of the declaration described above is in conformity with the relevant Union harmonisation legislation:	L'objet de la déclaration décrit ci-dessus est conforme à la législation d'harmonisation de l'Union applicable:
Angewandte EU-/EG-Richtlinie(n):	Applied EU/EC Directive(s):	Directive(s) UE/CE appliquées:
2006/42/EG (*1) 2014/30/EU	**2006/42/EC (*1) 2014/30/EU**	**2006/42/CE (*1) 2014/30/UE**

Angewandte harmonisierte Normen / Applied harmonized standards / Normes harmonisées appliquées:

EN 61496-1:2013 (Type2/4) EN 62061:2005+A2:2015 (SILCL1/3)	**EN 55011:2009+A1:2010**	**EN ISO 13849-1:2015 (Cat 2/4,PLc/e)**

Angewandte technische Spezifikationen / Applied technical specifications / Spécifications techniques appliquées:

IEC 61496-2:2013 (Type2/4)	**EN 50178:1997**	**EN 61508-1/-2/-3/-4:2010 (SIL1/3)**

Notified Body
(*1) TUEV-SUED Product Service GmbH, Zertifizierstelle, Ridlerstraße 65, D-80339 Munich, NB0123, Z10 17 08 68636 029
Dokumentationsbevollmächtigter ist der genannte Hersteller, Kontakt: quality@leuze.de.
Authorized for documentation is the stated manufacturer, contact: quality@leuze.de.
Autorisé pour documentation est le constructeur déclaré, contact: quality@leuze.de
2014/30/EU veröffentlicht: 29.03.2014, EU-Amtsblatt Nr. L 96/79-106; 2014/30/EU published: 29.03.2014, EU-Journal No. L 96/79-106; 2014/30/UE publié: Journal EU n° L 96/79-106

23.01.2018
Datum / Date / Date

Ulrich Balbach,
Geschäftsführer / Managing Director / Gérant

i.A. Fabien Zelenda
Quality Management Central Functions

Leuze electronic GmbH + Co. KG
In der Braike 1
D-73277 Owen
Telefon +49 (0) 7021 573-0
Telefax +49 (0) 7021 573-199
info@leuze.de
www.leuze.com

Leuze electronic GmbH + Co. KG, Sitz Owen, Registergericht Stuttgart, HRA 230712
Persönlich haftende Gesellschafterin Leuze electronic Geschäftsführungs-GmbH, Sitz Owen, Registergericht Stuttgart, HRB 230550
Geschäftsführer: Ulrich Balbach
USt.-IdNr. DE 145912521 | Zollnummer 2554232
Es gelten ausschließlich unsere aktuellen Verkaufs- und Lieferbedingungen
Only our current Terms and Conditions of Sale and Delivery shall apply

LEO-ZQM-148-07-FO