SMART
SENSOR
BUSINESS

Leuze electronic

the sensor people

BCL 95
Bar code reader

EN 2019/11/18 - 50140970
We reserve the right to make technical changes

Original operating instructions

ПРОМЭЛЕКТРОНИКА / sales@prom-elec.com

© 2019
Leuze electronic GmbH & Co. KG
In der Braike 1
D-73277 Owen / Germany
Phone: +49 7021 573-0
Fax: +49 7021 573-199
http://www.leuze.com
info@leuze.com

1 About this document ... 5
1.1 Used symbols and signal words ... 5
1.2 Terms and abbreviations ... 6
2 Safety ... 7
2.1 Intended use ... 7
2.2 Foreseeable misuse ... 8
2.3 Competent persons ... 8
2.4 Disclaimer ... 8
2.5 Laser safety notices ... 9
3 Device description ... 10
3.1 Device overview ... 10
3.1.1 The BCL 95 bar code reader ... 10
3.1.2 Stand-alone operation ... 10
3.2 Performance characteristics ... 10
3.3 Device construction ... 11
3.4 Connection technology ... 11
3.5 Display elements ... 11
4 Mounting ... 12
4.1 Selecting a mounting location ... 12
5 Electrical connection ... 14
5.1 Operating voltage ... 14
5.2 Housing ground ... 14
5.3 Pin assignment ... 15
5.4 Switching input ... 16
5.5 Switching output ... 17
5.6 Cable lengths and shielding ... 17
5.7 PC or terminal connection ... 17
6 Configuration and diagnostics software - Sensor Studio ... 18
6.1 System requirements ... 18
6.2 Installing Sensor Studio ... 19
6.2.1 Downloading configuration software ... 19
6.2.2 Installing the Sensor Studio FDT frame ... 19
6.2.3 Install the communication DTM and device DTM ... 19
6.2.4 Connecting device to PC ... 19
6.3 Starting Sensor Studio ... 20
6.4 Exiting Sensor Studio ... 21
6.5 Configuration parameters ... 22
6.5.1 Decode tab ... 23
6.5.2 Output tab ... 26
6.5.3 Control tab ... 28
6.5.4 Host interface tab ... 29
6.5.5 Reference code tab ... 30
6.5.6 Switching input tab ... 32
6.5.7 Switching output tab ... 33
6.6 Diagnosis ... 34
6.7 Firmware Reload ... 35

7 Starting up the device - Configuration ... 36
7.1 Measures to be performed prior to the initial commissioning ... 36
7.2 Starting the device ... 36
7.2.1 Power-on test ... 36
7.2.2 Interface ... 36
7.2.3 Online commands ... 36
7.2.4 Problems ... 36
7.3 Starting up with factory settings ... 37
7.4 Setting the configuration parameters ... 37
7.4.1 Service mode ... 37
7.4.2 Parameter sets ... 38
8 Online commands ... 39
8.1 Overview of commands and parameters ... 39
8.2 General online commands ... 40
8.3 Online commands for system control ... 45
8.4 Online commands for the parameter set operations ... 46
9 Care, maintenance and disposal ... 50
10 Diagnostics and troubleshooting ... 51
11 Service and support ... 52
11.1 What to do should servicing be required? ... 52
12 Technical data ... 53
12.1 General specifications ... 53
12.2 Reading fields ... 55
12.3 Dimensioned drawings ... 56
13 Order guide and accessories ... 58
13.1 Type overview ... 58
13.2 Accessories ... 58
14 EC Declaration of Conformity ... 59
15 Appendix ... 60
15.1 Bar code samples ... 60

1 About this document

1.1 Used symbols and signal words

Tab. 1.1: Warning symbols and signal words

	Symbol indicating dangers to persons
	Symbol indicating dangers from harmful laser radiation
	Symbol indicating possible property damage
NOTE	Signal word for property damage Indicates dangers that may result in property damage if the measures for danger avoidance are not followed.
CAUTION	Signal word for minor injuries Indicates dangers that may result in minor injury if the measures for danger avoidance are not followed.
WARNING	Signal word for serious injury Indicates dangers that may result in severe or fatal injury if the measures for danger avoidance are not followed.

Tab. 1.2: Other symbols

	Symbol for tips Text passages with this symbol provide you with further information.
↳	Symbol for action steps Text passages with this symbol instruct you to perform actions.
⇨	Symbol for action results Text passages with this symbol describe the result of the preceding action.

1.2 Terms and abbreviations

Tab. 1.3: Terms and abbreviations

BCL	Bar code reader
DNC	This PIN must not be connected (Do Not Connect)
DTM	Software device manager (Device Type Manager)
EMC	Electromagnetic compatibility
EN	European standard
FDT	Software frame for management of device managers (DTM) (Field Device Tool)
FE	Functional earth
GUI	Graphical user interface
HID	Device class for input devices with which users directly interact (Human Interface Device)
NC	This pin is not contacted at the device (Not Connected)
SELV	Safe Extra Low Voltage
PLC	Programmable Logic Control (corresponds to Programmable Logic Controller (PLC))
SW_IN	Switching input
SW_OUT	Switching output

2 Safety

This bar code reader was developed, manufactured and tested in accordance with the applicable safety standards. It corresponds to the state of the art.

2.1 Intended use

Bar code readers of the BCL 95 series are conceived as stationary scanners with integrated decoder for all current bar codes used for automatic object detection.

Areas of application

Bar code readers of the BCL 95 series are designed for the following areas of application:

- Automatic analyzers
- Robotics and automation technology
- Material flow
- Labeling and packaging machines
- For space-critical bar code reading tasks
- Applications with large reading field with small modules

CAUTION

Observe intended use!

The protection of personnel and the device cannot be guaranteed if the device is operated in a manner not complying with its intended use.

- Only operate the device in accordance with its intended use.
- Leuze electronic GmbH + Co. KG is not liable for damages caused by improper use.
- Read these operating instructions before commissioning the device. Knowledge of the operating instructions is an element of proper use.

NOTICE

Comply with conditions and regulations!

- Observe the locally applicable legal regulations and the rules of the employer's liability insurance association.

CAUTION

UL applications!

For UL applications, use is only permitted in LPS/Class 2 circuits in accordance with the NEC (National Electric Code).

2.2 Foreseeable misuse

Any use other than that defined under "Intended use" or which goes beyond that use is considered improper use.

In particular, use of the device is not permitted in the following cases:

- in rooms with explosive atmospheres
- in circuits which are relevant to safety
- for medical purposes

	NOTICE
	Do not modify or otherwise interfere with the device! ↳ Do not carry out modifications or otherwise interfere with the device. The device must not be tampered with and must not be changed in any way. ↳ The device must not be opened. There are no user-serviceable parts inside. ↳ Repairs must only be performed by Leuze electronic GmbH + Co. KG.

	NOTICE
	↳ To increase the decoding reliability, it is recommended that only the actually needed code types be enabled. ↳ If there are very high requirements on reading reliability, the use of additional processes is recommended, e.g.: ⇨ Device side: check digits, multiple evaluation by setting Equal Scans to min. ≥ 2 ⇨ Application side: reading moving codes ⇨ System side: plausibility checks of the bar code information

2.3 Competent persons

Connection, mounting, commissioning and adjustment of the device must only be carried out by competent persons.

Prerequisites for competent persons:

- They have a suitable technical education.
- They are familiar with the rules and regulations for occupational safety and safety at work.
- They are familiar with the operating instructions for the device.
- They have been instructed by the responsible person on the mounting and operation of the device.

Certified electricians

Electrical work must be carried out by a certified electrician.

Due to their technical training, knowledge and experience as well as their familiarity with relevant standards and regulations, certified electricians are able to perform work on electrical systems and independently detect possible dangers.

In Germany, certified electricians must fulfill the requirements of accident-prevention regulations DGUV (German Social Accident Insurance) provision 3 (e.g. electrician foreman). In other countries, there are respective regulations that must be observed.

2.4 Disclaimer

Leuze electronic GmbH + Co. KG is not liable in the following cases:

- The device is not being used properly.
- Reasonably foreseeable misuse is not taken into account.
- Mounting and electrical connection are not properly performed.
- Changes (e.g., constructional) are made to the device.

2.5 Laser safety notices

ATTENTION

LASER RADIATION – CLASS 1 LASER PRODUCT

The device satisfies the requirements of IEC/EN 60825-1:2014 safety regulations for a product of **laser class 1** and complies with 21 CFR 1040.10 except for conformance with IEC 60825-1 Ed. 3., as described in Laser Notice No. 56, dated May 8, 2019.

- Observe the applicable statutory and local laser protection regulations.
- The device must not be tampered with and must not be changed in any way.
  There are no user-serviceable parts inside the device.
  Repairs must only be performed by Leuze electronic GmbH + Co. KG.

NOTICE

Laser aperture!

The glass optics cover is the only aperture through which laser radiation may be observed on this product.

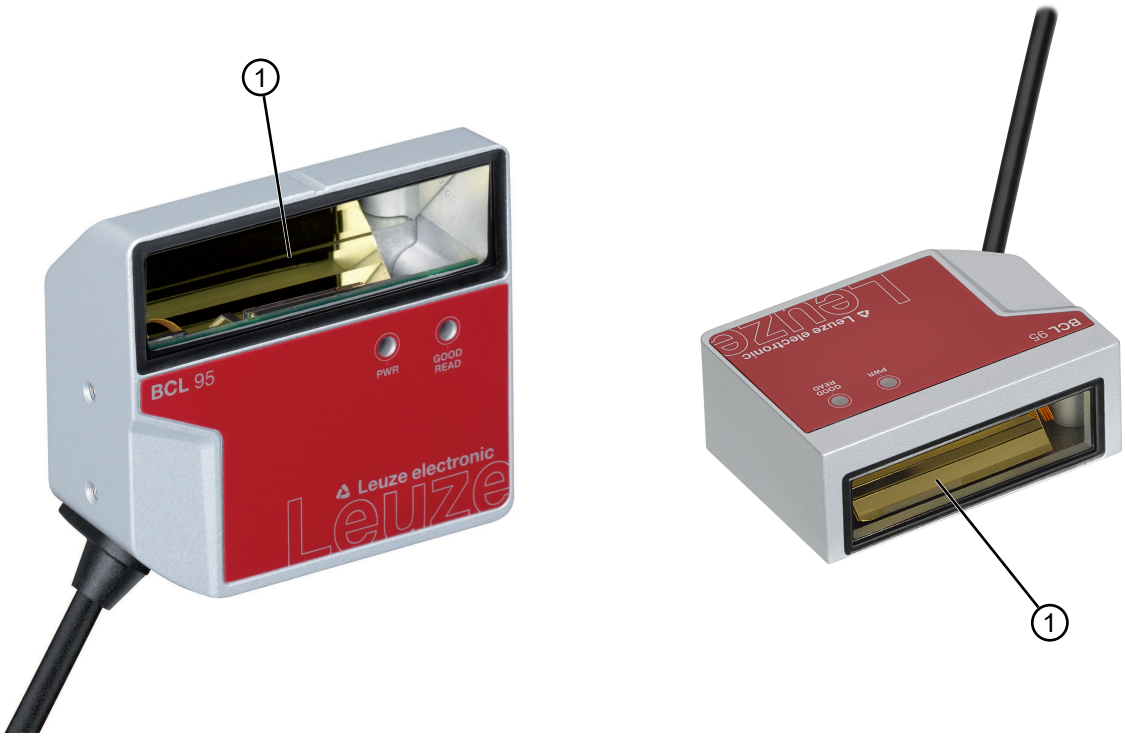

1 Laser aperture

Fig. 2.1: Laser aperture

3 Device description

3.1 Device overview

3.1.1 The BCL 95 bar code reader

The bar code reader is a laser scanner with integrated decoder for all commonly used bar codes, e.g. 2/5 Interleaved, Code 39, Code 128, EAN etc.

- The reading field is optimized for the reading of sample tubes, reagent containers, etc., in lab automation.
- Reliable reading of 80 mm high code labels at a short distance.
- Due to the small dimensions of the unit and the variants with frontal or lateral beam exit, the bar code reader can also be used in highly constrained spaces.
- The many possible configurations of the device allow it to be adapted to a multitude of reading tasks.
- Information on technical data and characteristics: see chapter 12 "Technical data".

3.1.2 Stand-alone operation

The bar code reader is operated as a "stand-alone" single device. The electrical connection of the operating voltage, the interface and the switching input is made via a 6-wire cable with open cable ends or via an 8-pin M12 connector.

3.2 Performance characteristics

- Laser scanner with integrated decoder; lateral or frontal beam exit
- High-resolution optics
- Resolution 0.15 mm … 0.5 mm

  Reading of all common codes of module size 165 … 500 µm (6 … 20 mil) at a reading field height of ≥ 80 mm, even with a reading distance of 25 mm for devices with lateral beam exit
- Reading distance 25 mm … 170 mm
- Scanning rate of 600 scans/s facilitates reliable reading, even while in motion
- Compact design for simple integration, even in constrained spaces
- Sturdy diecast zinc housing
  - Connection cable 2 m with open cable end
  - Pigtail with M12 connector, 8-pin
- Process and service interface RS 232

3.3 Device construction

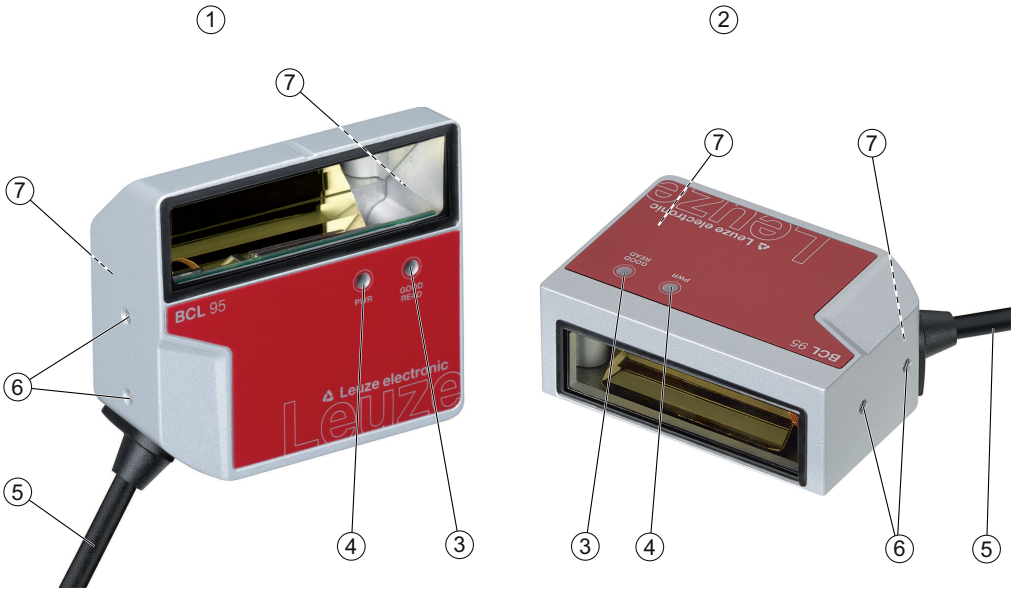

1 BCL 95 M0/R2 …; lateral beam exit
2 BCL 95 M2/R2 …; frontal beam exit
3 Indicator diode – decode LED
4 Indicator diode – status LED
5 Connection cable, 6-wire with open cable end
Pigtail with M12 connector, 8-pin
6 M2.5 mounting threads on the device side
7 M3 mounting threads on the rear of the device

Fig. 3.1: Device construction of the BCL 95

3.4 Connection technology

6-wire connection cable with open cable end or pigtail with 8-pin M12 connection plug:

- Voltage supply
- 1 switching input
- 1 switching output
- Process and service interface RS 232

3.5 Display elements

Located on the front of the device are two LEDs that indicate the readiness for operation and the read status.

LED	Display	Description
Status LED (PWR)	Green, flashing	Initialization phase
	Green, continuous light	Operational readiness
	Red, flashing 200 ms	Warning
	Red, continuous light	Error, no function
	Orange, flashing 200 ms	Service operation
Decode LED (GOOD READ)	Green, 200 ms on	Reading successful
	Red, 200 ms off	No reading result
	Orange, continuous light	Reading gate active

4 Mounting

- Observe the mounting instructions (see chapter 4.1 "Selecting a mounting location").
- Fasten the bar code reader on the mounting threads (see chapter 3.3 "Device construction"):
  - M3 mounting threads on the rear of the device
  - M2.5 mounting threads on the device side

4.1 Selecting a mounting location

	NOTICE
	The size of the bar code module influences the maximum reading distance and the width of the reading field. When selecting a mounting location and/or the bar code label, take into account the different reading characteristics of the bar code reader with various bar code modules.

	NOTICE
	Observe when choosing the mounting location! Maintain the permissible environmental conditions (humidity, temperature). Avoid possible soiling of the reading window due to liquids, abrasion by boxes, or packaging material residues. Ensure that there is the lowest possible chance of damage to the bar code reader by mechanical collision or jammed parts. Avoid possible ambient light influence (no direct sunlight).

In order to select the right mounting location, several factors must be considered:

- Size, orientation, and position tolerance of the bar codes on the objects to be scanned.
- The reading field of the bar code reader in relation to the bar code module width.
- The resulting minimum and maximum reading distance from the respective reading field with the respective module width (see chapter 12.2 "Reading fields").
- alignment of the bar code reader for avoiding reflections.
- distance between bar code reader and host system with respect to the interface.

The best read results are obtained if the following prerequisites are fulfilled:

- The reading distance lies in the middle area of the reading field.
- There is no direct sunlight and ambient light influences are avoided
- The bar code labels are of good print quality and have good contrast ratios.
- You are not using glossy labels.
- The bar code is moved past the reading window with an angle of rotation of approx. 15°.

	NOTICE
	Avoid direct reflection of the laser beam! The beam exits the bar code reader perpendicular to the reading window. ↳ The bar code label must be rotated by > 10 ° to avoid a reflection of the laser beam in the case of glossy labels.

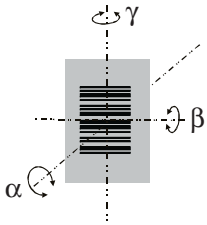

α	Azimuth angle
β	Angle of inclination
γ	Angle of rotation
	Recommended angle of rotation: γ > 10°

Fig. 4.1: Definition of the reading angles

5 Electrical connection

CAUTION

Safety notices!

- The bar code reader is completely sealed and must not be opened.
- Before connecting the device, be sure that the supply voltage agrees with the value printed on the name plate.
- Connection of the device and maintenance work while under voltage must only be carried out by a qualified electrician.
- The power supply unit for the generation of the supply voltage for the bar code reader and the corresponding connection units must have a secure electrical insulation according to IEC 60742 (PELV).
- If faults cannot be rectified, take the device out of operation and protect it from accidentally being started.

CAUTION

UL applications!

For UL applications, use is only permitted in LPS/Class 2 circuits in accordance with the NEC (National Electric Code).

NOTICE

Laying cables!

- Lay all connection cables and signal lines within the electrical installation space or permanently in cable ducts.
- Lay the cables and lines so that they are protected against external damages.
- For further information: see ISO 13849-2, Table D.4.

The electrical connection is established via the connection cable (see chapter 5.3 "Pin assignment"):

- 6-wire connection cable with open cable end
- Pigtail with M12 connector, 8-pin

The bar code reader is provided with the following interfaces:

- Voltage supply
- 1 switching input
- 1 switching output
- Process and service interface RS 232

You can configure the functions of the switching input and the switching output according to your requirements via the *Sensor Studio* configuration software (see chapter 6 "Configuration and diagnostics software - Sensor Studio").

5.1 Operating voltage

The bar code reader is designed for an operating voltage of 5 V. The operating voltage is fed in via the connection cable (see chapter 5.3 "Pin assignment").

- +5 VDC: pin 1 of the 8-pin M12 connector plug or red wire of the connection cable with open cable end
- GND: pin 3 of the 8-pin M12 connector plug or violet wire of the connection cable with open cable end

5.2 Housing ground

To avoid electromagnetic interference, a low-impedance connection is necessary from the housing to the machine ground.

5.3 Pin assignment

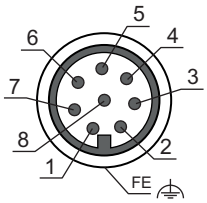

Fig. 5.1: Pin assignment for M12 connector, 8-pin, A-coded

Tab. 5.1: RS 232 – M12 connector

Pin	Signal	Description	IN / OUT	Core color
1	+5 VDC	Voltage supply 5 VDC	IN	White
2	SW IN	Switching input	IN	Brown
3	GND	Voltage supply 0 VDC / Ground	IN	Green
4	SW OUT	Switching output	OUT	Yellow
5	NC	Not connected	---	Gray
6	RS 232 RxD	Serial interface	IN	Pink
7	RS 232 TxD	Serial interface	OUT	Blue
8	FE/Shield	Functional earth/shield	---	Red

Tab. 5.2: RS 232 – connection cable

Core color	Signal	Description	IN / OUT
Red	+5 VDC	Voltage supply 5 VDC	IN
Orange	SW IN	Switching input	IN
Violet	GND	Voltage supply 0 VDC / Ground	IN
Black	SW OUT	Switching output	OUT
White	RS 232 RxD	Serial interface	IN
Green	RS 232 TxD	Serial interface	OUT
Drain wire, yellow	FE/Shield	Functional earth/shield	---

5.4 Switching input

By means of the SW IN switching input connection, you can trigger a read process in the standard setting (low = active) with the connection SW IN (pin 2 / orange) and GND (pin 3 / violet). We recommend wiring a 2.2 kΩ pull-up resistor as defined cable termination.

Depending on how the switching input is actuated, you can operate it both as NPN (low = active) as well as PNP (high = active).

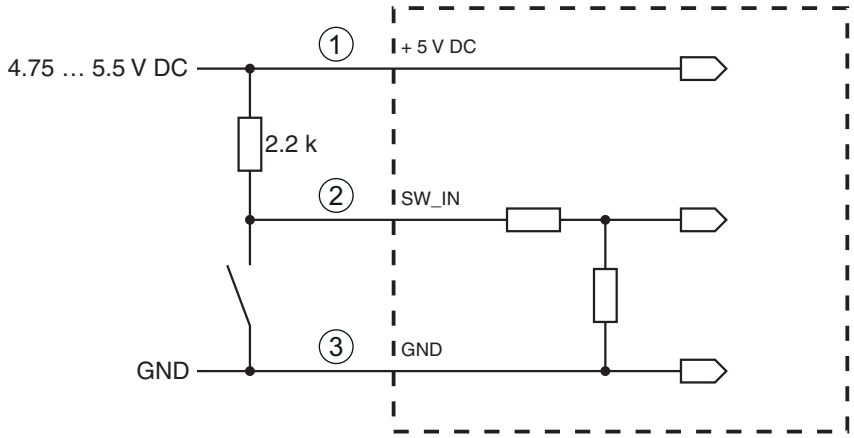

1 Pin 1 / red
2 Pin 2 / orange
3 Pin 3 / violet
Connection version NPN: standard setting (low = active); input resistance: 36 kΩ

Fig. 5.2: Switching input for connection variant NPN (standard setting)

PNP actuation: With the "inverted" setting (high = active), you can trigger a read process by applying a voltage of +5 V DC (pin 1 / red) at SW IN (pin 2 / orange).

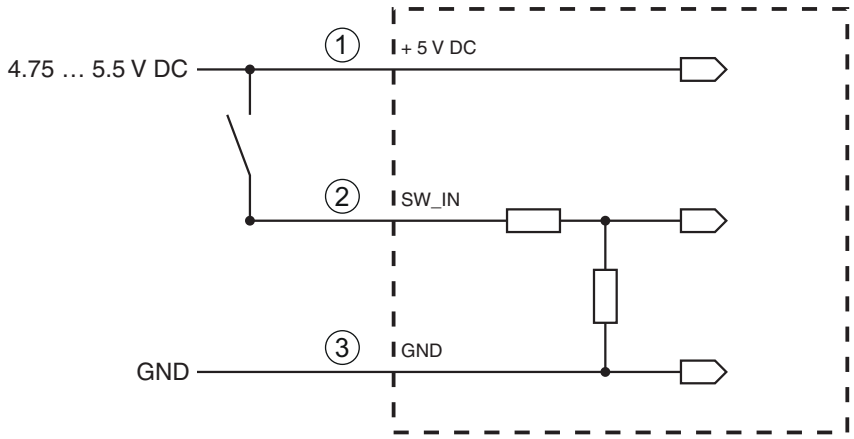

1 Pin 1 / red
2 Pin 2 / orange
3 Pin 3 / violet
Connection version PNP: inverted setting (high = active); input resistance: 36 kΩ

Fig. 5.3: Switching input for connection variant PNP ("inverted" setting)

ПРОМЭЛЕКТРОНИКА / sales@prom-elec.com

5.5 Switching output

The NPN switching output connection between SW OUT (pin 4 / black) and GND (pin 3 / violet) can be activated in the scanner setup.

In the basic setting, the SW OUT switching output is switched to GND if a code is detected.

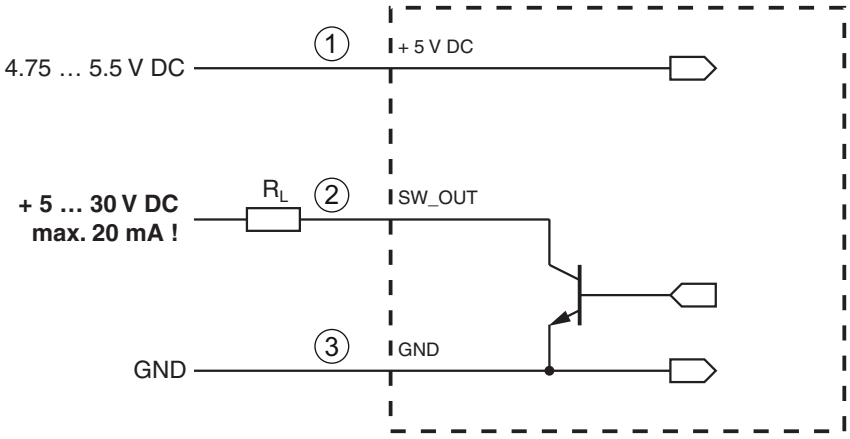

1 Pin 1 / red
2 Pin 4 / black
3 Pin 3 / violet

Fig. 5.4: Switching output

NOTICE	
!	**Maximum loading of the switching output** ↳ Do not load the switching output of the code reader with more than 20 mA at +5 … 30 V DC!

5.6 Cable lengths and shielding

↳ Observe the maximum cable lengths:

Connection	Interface	Max. cable length	Shielding
BCL 95	RS 232	< 3 m	Required
Switching input Switching output		< 3 m	Not necessary

NOTICE	
!	↳ Make certain that the cables of the RS 232 interface are shielded should a cable extension be necessary.

5.7 PC or terminal connection

Via the RS 232 service interface, you can configure the bar code reader by means of a PC or a terminal program. For this, you need an RS 232 connection that establishes the RxD, TxD and GND connections between PC and bar code reader (see chapter 5.3 "Pin assignment").

6 Configuration and diagnostics software - Sensor Studio

The *Sensor Studio* configuration software provides a graphical user interface for the operation, configuration and diagnostics of the device via the RS 232 service interface.

A device that is not connected to the PC can be configured offline.

Configurations can be saved and reopened as projects for transferring back to the device at a later time.

	NOTICE
	Only use the *Sensor Studio* configuration software for products manufactured by Leuze electronic. The *Sensor Studio* configuration software is offered in the following languages: German, English, French, Italian and Spanish. The FDT frame application of the *Sensor Studio* supports all languages; all languages may not be supported in the device DTM (Device Type Manager).

The *Sensor Studio* configuration software is designed according to the FDT/DTM concept:

- You make the individual configuration settings for the bar code reader in the Device Type Manager (DTM).
- The individual DTM configurations of a project can be called up via the frame application of the Field Device Tool (FDT).
- Communication DTM for bar code readers: *LeCommInterface*
- Device DTM for the BCL 95 bar code reader

Procedure for the installation of the software and hardware:

- Install the *Sensor Studio* configuration software on the PC.
- Install the communication and device DTM. Communication and device DTM are included in the *LeAnalysisCollectionSetup* installation package.
- Create device DTM for BCL 95 in the project tree of the *Sensor Studio* FDT frame.
- Connect bar code reader to PC (see chapter 5.7 "PC or terminal connection").
- Activate service interface on bar code reader (see chapter 7.4.1 "Service mode").

6.1 System requirements

To use the *Sensor Studio* configuration software, you need a PC or laptop with the following specifications:

Tab. 6.1: System requirements for *Sensor Studio* installation

Operating system	Windows XP or higher (32 bit, 64 bit) Windows Vista Windows 7 Windows 8
Computer	Processor type: 1 GHz or higher Serial COM interface CD-ROM drive Main memory (RAM): at least 64 MB Keyboard and mouse or touchpad
Graphics card	At least 1024 x 768 pixels
Required hard disk capacity for *Sensor Studio* and communication DTM	35 MB

	NOTICE
	Administrator privileges on the PC are necessary for installing *Sensor Studio*.

6.2 Installing Sensor Studio

	NOTICE
	The installation files of the *Sensor Studio* configuration software must be downloaded from the Internet at **www.leuze.com.** For subsequent updates, you can find the most recent version of the *Sensor Studio* installation software on the Internet at **www.leuze.com**.

6.2.1 Downloading configuration software

- Call up the Leuze home page: **www.leuze.com**
- Enter the type designation or part number of the device as the search term.
- The configuration software can be found on the product page for the device under the *Downloads* tab.

6.2.2 Installing the Sensor Studio FDT frame

	NOTICE
	First install the software! Do not yet connect the device to the PC. First install the software.

	NOTICE
	If FDT frame software is already installed on your PC, you do not need the *Sensor Studio* installation. You can install the communication DTM and the device DTM in the existing FDT frame. Communication DTM and device DTM are included in the *LeAnalysisCollectionSetup* installation package.

- Start the PC.
- Download the configuration software from the Internet to the PC (see chapter 6.2.1 "Downloading configuration software"). Unpack the installation package.
- Start the *SensorStudioSetup.exe* file.
- Follow the instructions on the screen.

6.2.3 Install the communication DTM and device DTM

Prerequisites:

- ✓ An FDT frame is installed on the PC.
- Start the *LeAnalysisCollection.exe* file from the installation package and follow the instructions on the screen.

6.2.4 Connecting device to PC

The device is connected to the PC via the RS 232 interface.

You need an RS 232 connection that establishes the RxD, TxD and GND connections between PC and device (see chapter 5.7 "PC or terminal connection").

The +5 V DC voltage supply is to be fed in externally (see chapter 5.1 "Operating voltage").

6.3 Starting Sensor Studio

Prerequisites:

✓ The device has been mounted (see chapter 4 "Mounting") and connected (see chapter 5 "Electrical connection") correctly.

✓ The device is connected to the PC via the RS 232 interface (see chapter 6.2.4 "Connecting device to PC").

✓ The Sensor Studio configuration software is installed on the PC (see chapter 6.2 "Installing Sensor Studio").

↳ Start the *Sensor Studio* configuration software by double-clicking the [*Sensor Studio*] icon ( ).

⇨ The **mode selection** of the Project Wizard is displayed.

↳ Select the **Device selection without communication connection (offline)** configuration mode and click on [Next].

⇨ The Project Wizard displays the device selection list of the configurable devices.

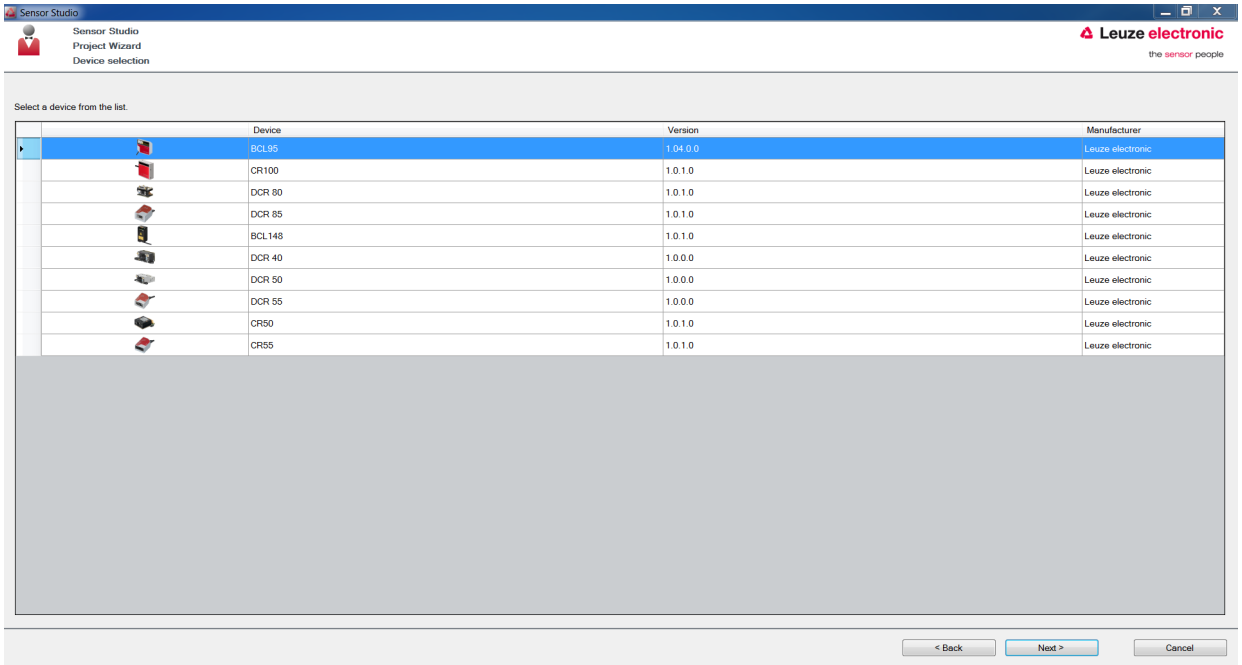

Fig. 6.1: Device selection for the BCL 95

↳ Select **BCL 95** in the **device selection** and click on [Next].

⇨ The device manager (DTM) of the connected bar code reader starts with the offline view for the *Sensor Studio* configuration project.

↳ Establish the online connection to the connected bar code reader.

  ⇨ In the *Sensor Studio* FDT frame, click on the [Establish connection with device] button ( ).

  ⇨ In the *Sensor Studio* FDT frame, click on the [Upload parameters to device] button ( ).

⇨ The current configuration data is displayed in the device manager (DTM).

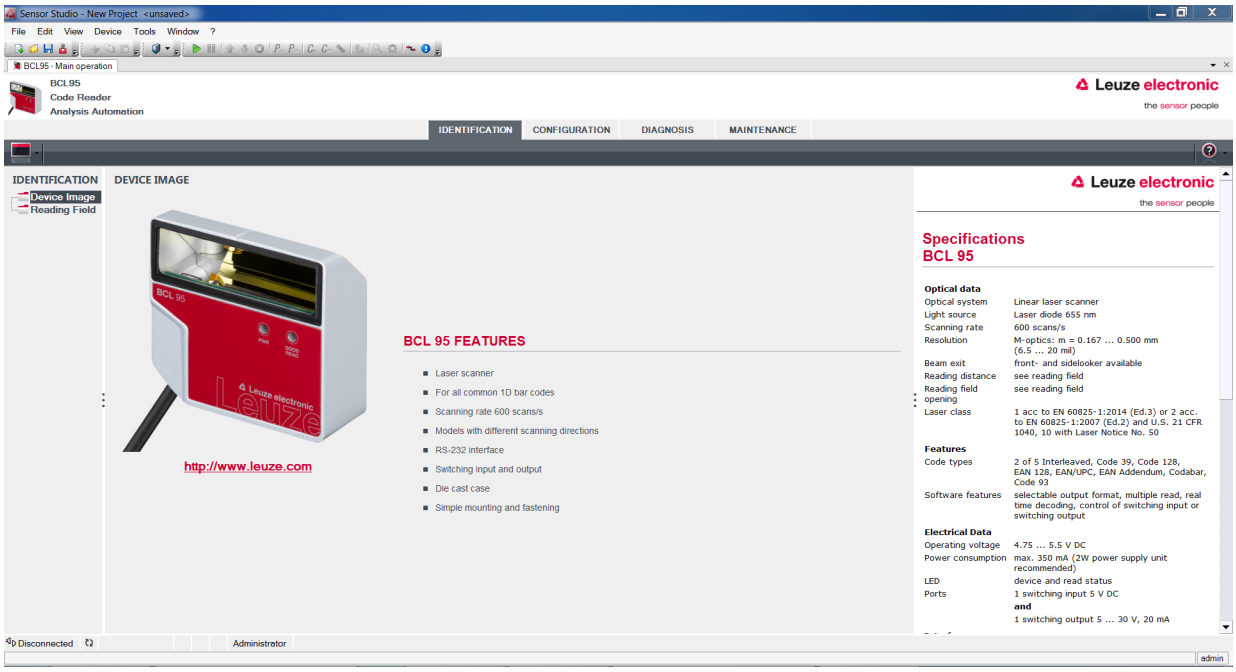

Fig. 6.2: Configuration project: device manager for BCL 95

- The menus of the *Sensor Studio* device manager (DTM) can be used to change or read out the configuration of the connected device.
  - ⇨ The user interface of the *Sensor Studio* device manager (DTM) is largely self-explanatory.
  - ⇨ The online help system provides information on the menu items and adjustment parameters. Select the **Help** menu item in the menu [?].
- Transfer the modified configuration parameters to the device.
  - ⇨ If a connection exists, click on the [Download parameters to device] ( ) button on the task bar.

6.4 Exiting Sensor Studio

After completing the configuration settings, close the *Sensor Studio* configuration software.

- Exit the program via **File > Exit**.
- Save the configuration settings as a configuration project on the PC.

6.5 Configuration parameters

In this chapter, you will find information and explanations on the configuration parameters of the device manager (DTM) for the bar code reader.

	NOTICE
	This chapter does not include a complete description of the *Sensor Studio* configuration software. Complete information on the FDT frame menu and on the functions in the device manager (DTM) can be found in the online help system.

The device manager (DTM) for BCL 95 bar code readers of the *Sensor Studio* configuration software offers the following configuration functions:

- Decode (see chapter 6.5.1 "Decode tab")
- Output (see chapter 6.5.2 "Output tab")
- Control (see chapter 6.5.3 "Control tab")
- Host Interface (see chapter 6.5.4 "Host interface tab")
- Reference Code (see chapter 6.5.5 "Reference code tab")
- Switching input (sensor) (see chapter 6.5.6 "Switching input tab")
- Switching output (switch) (see chapter 6.5.7 "Switching output tab")

	NOTICE
	The online help system displays information on the menu items and configuration parameters for each function. Select the **Help** menu item in the menu [?]

The *Sensor Studio* configuration software offers the following buttons in the **CONFIGURATION** menu:

- : [Reset all parameters in the GUI to their factory default settings]

  Resets all parameters in the graphical user interface to the factory settings.

6.5.1 Decode tab

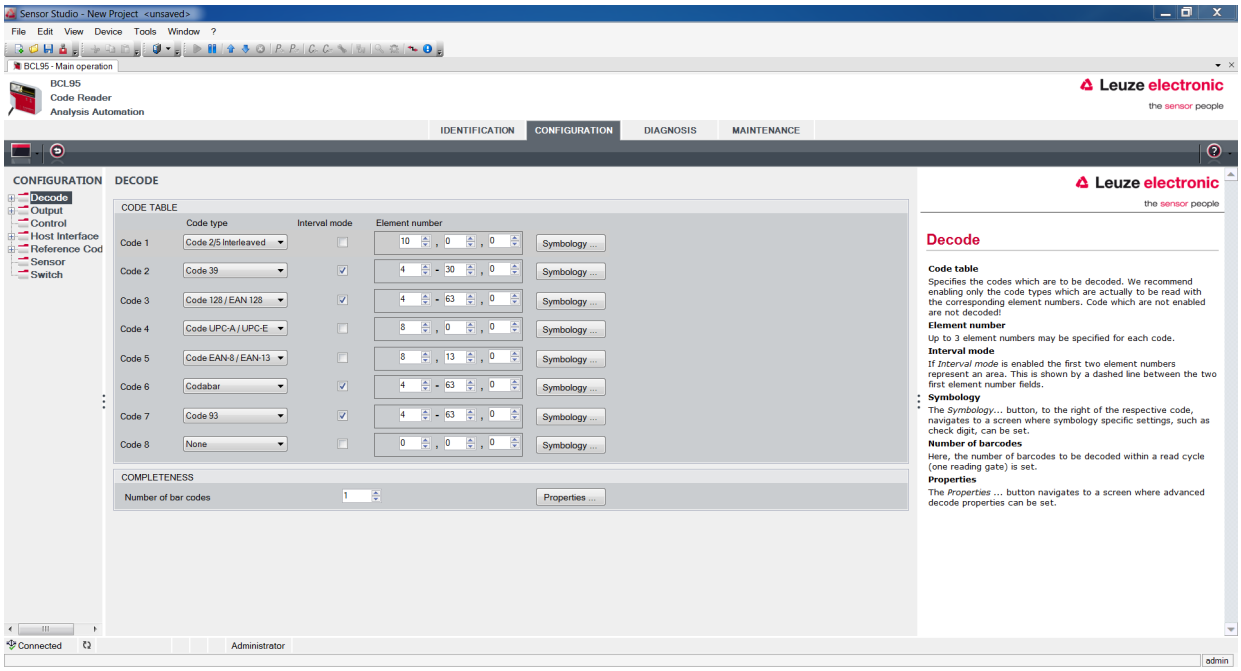

Fig. 6.3: *Decode* tab

Code table (CODE TABLE)	Here, the codes which are to be decoded are set. Codes which are not enabled are not decoded! **Note:** We recommend enabling **only** the code types which are to actually be read with the corresponding element numbers.
Element number	In the field Element number, up to three element entries may be entered. A range of permissible elements is indicated by a dash: e.g., 4-40 elements. To select a range, set the check mark beneath **Interval mode**. Up to three fixed element numbers with comma: e.g.: 8,13 elements Both are also possible, but the range must be specified first (select **Interval mode**): e.g.: 4-10,20 elements
Labels to be decoded (COMPLETENESS / Number of bar codes)	Here, the number of the bar codes to be decoded within a read cycle (one reading gate) is set.

	NOTICE
	If the code EAN128 is to be read, 3 additional characters are to be set for the code identifier.

Properties (Symbology Properties)	In the Symbology **Properties** window to the right of the respective code, after **Element number**, the code-specific settings such as the check digit can be selected. Alternatively, you can select the property settings directly via the navigation tree with the [Symbologies] button. The properties can be individually set for each code type.

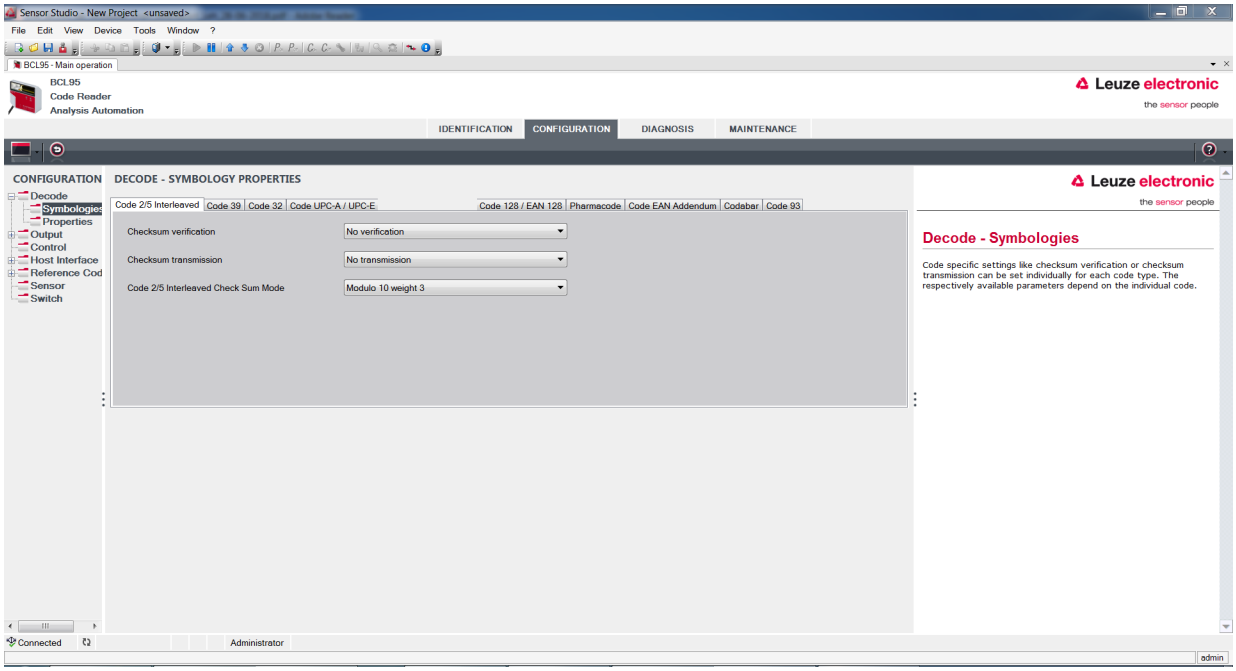

Fig. 6.4: Standard settings of the **Properties** dialog box (SYMBOLOGY PROPERTIES)

Properties dialog box (Common Properties)

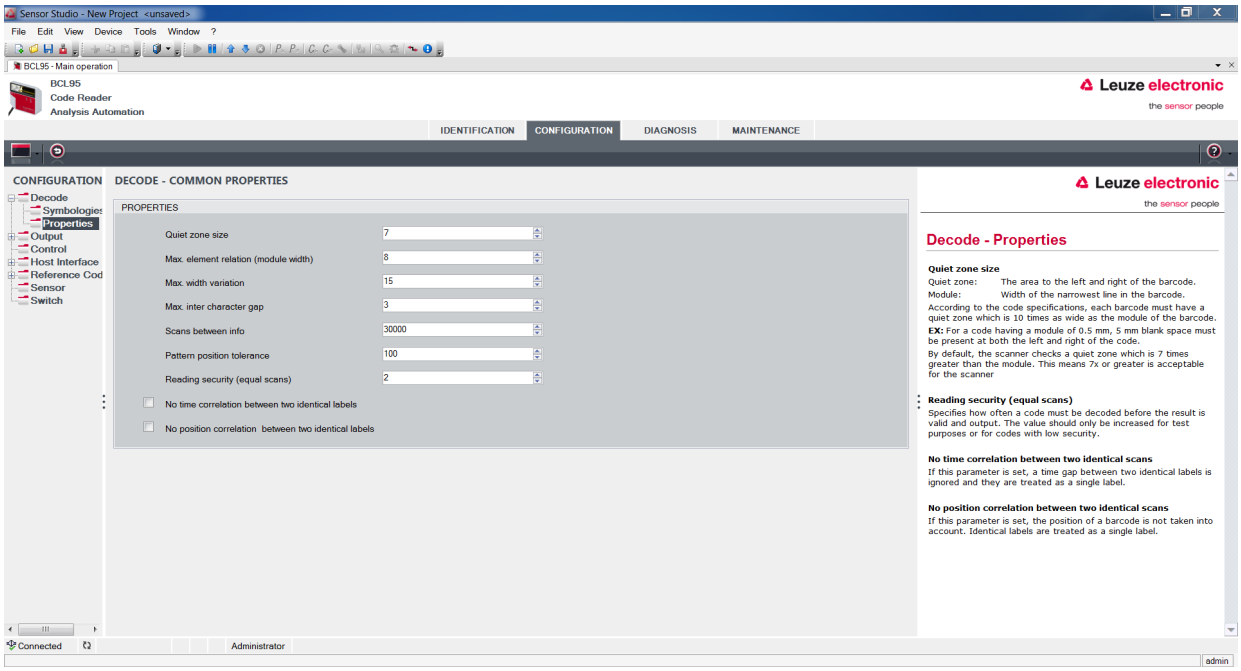

Fig. 6.5: Standard settings of the **Properties** dialog box (COMMON PROPERTIES)

Quiet zone minimum size (in module widths) Quiet zone size	Quiet zone: the area to the left and right of the bar code Module: width of the narrowest bar in the bar code According to code specifications, each bar code must have a quiet zone that is 10x as wide as the module of the bar code. Example: For a code with a module of 0.5 mm, there must be 5 mm of empty space to the left and right. By default, the scanner checks a quiet zone that is 7x greater than the module.
Reading reliability (Reading reliability (equal scans))	Under **reading reliability** (equal scans), it is possible to select how often a code must be decoded before the result is valid and output
No time correlation between two identical scans	If this parameter is set, a gap between two identical labels is ignored and they are treated as a single label.
No position correlation between two identical scans	If this parameter is set, then the position of a bar code label in the reading beam is not taken into account. Identical labels are treated as a single label.

NOTICE

In general, the remaining parameters must not be changed. In the worst case, this could corrupt the read result!

6.5.2 Output tab

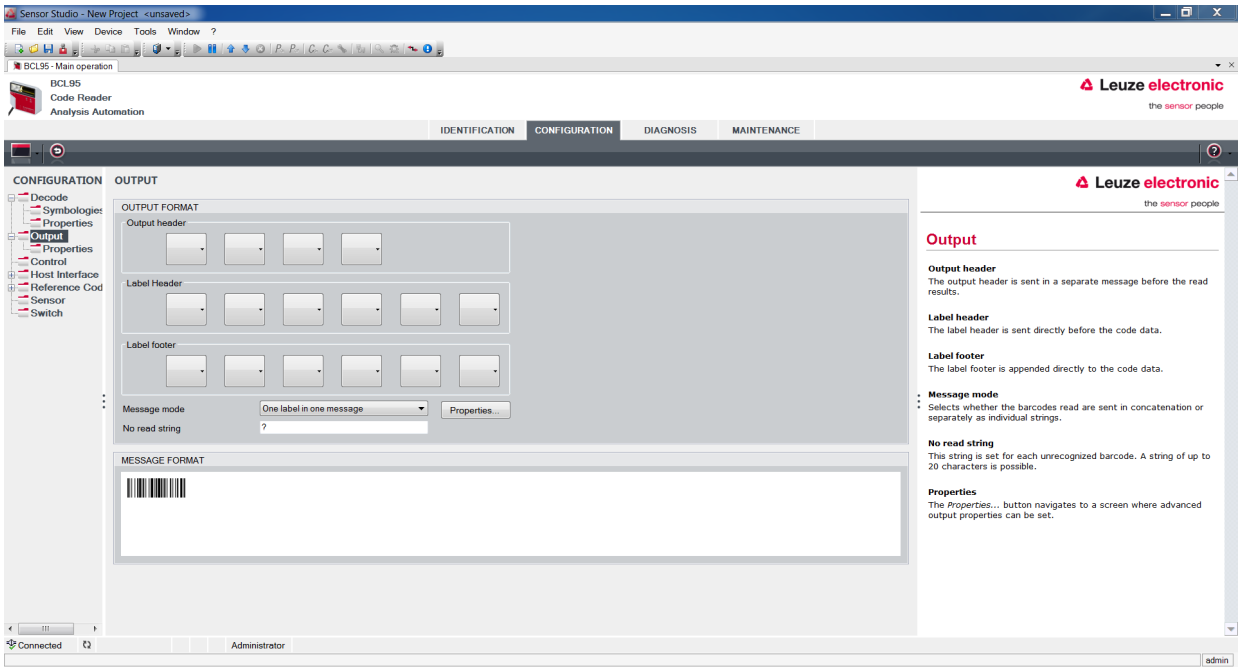

Fig. 6.6: *Output* tab (OUTPUT FORMAT)

Output header	Select from the options listed below. The output header is sent in a separate message before the read result.
Label header	The label header is set directly before the code data.
Label footer	The label footer is appended directly to the code data.
Message mode	Selects whether the bar codes read are sent in concatenation or separately as individual strings.

	NOTICE
	The structure of this message string is depicted symbolically in the preview window.

Text in the case of misreading (No read string)	This character is set for each unrecognized bar code. Multiple characters (=string) may be entered here. Up to 20 characters are possible.

Properties dialog box (Common Properties)

Set the desired formatting modes and formatting characters as necessary.

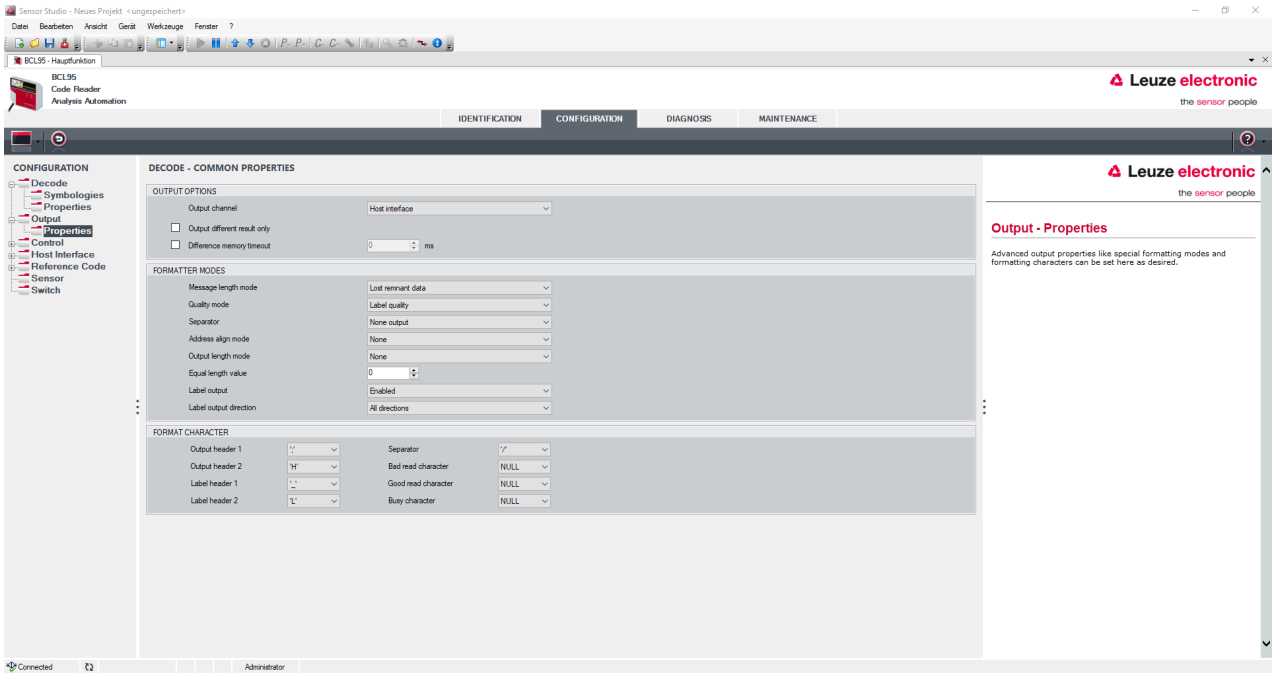

Fig. 6.14: **Properties** dialog box (COMMON PROPERTIES)

Communication settings (Output channel)	Select from one of the options listed. Standard setting: *Host Interface*
Code output only if the codes/labels are different (Output different result only)	If you select this setting, a read result is only output within a reading gate opening if it is different than the previous read result. When rack reading, for example, this is used to set that the codes within adjacent samples are only output once.
Deletion of code output memory (Difference memory timeout)	Selecting this setting deletes the difference memory after the timeout time that can be set to the right of the checkbox has elapsed. After the timeout time has elapsed, a detected label is output a second time even if it was already directly detected once and the *Output different result only* checkbox is selected. The timeout time between the last reading and deletion of the difference memory can be set from 100 ms to 5000 ms.

6.5.3 Control tab

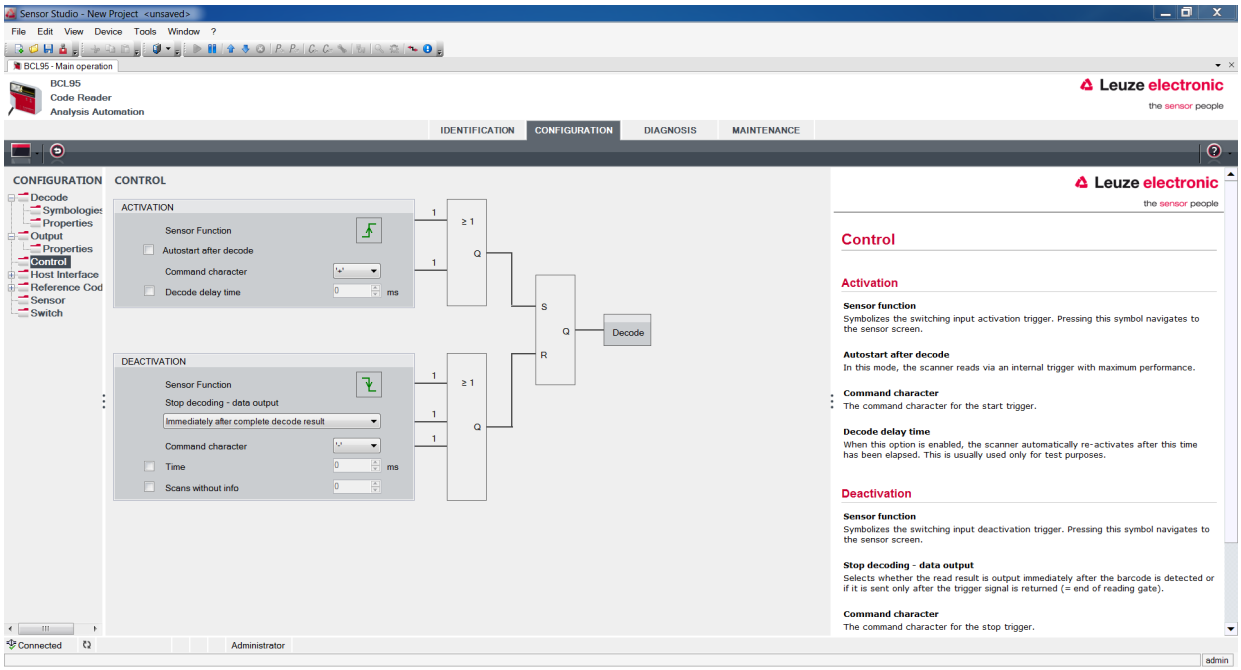

Fig. 6.7: *Control* tab

Activation

Switching input 1 Function	See menu **switching input**
Auto-start after decoding Autostart after decode	In this mode, the scanner reads via an internal trigger signal with maximum performance. **Note**: Up to 100 codes per second can be transmitted.
Command character	The standard online character for the trigger start is the ´+´ character. The character cannot be changed.
Decode delay time	After the time set here has passed, the scanner automatically reactivates itself following a reading gate end (e.g. in combination with Autostart after decode). Is normally used for test purposes.

Deactivation

Switching input 1 Function	See menu **switching input**
Immediately after the complete decoding result is available	If the setting is activated, the read result is output immediately after the bar code is decoded. If the setting is deactivated, the read result is sent only after the trigger signal is returned (= end of reading gate).
Command character	The standard online character for the trigger end is the ´-´ character. The character cannot be changed.
Time	If the code reader is activated, the reading gate is automatically closed by the code reader after this preset time has elapsed (e.g. for test purposes).
Scans without info	Following a successful read, the code reader waits for this number of scans (sequential scans with no read result) before it automatically deactivates itself.

6.5.4 Host interface tab

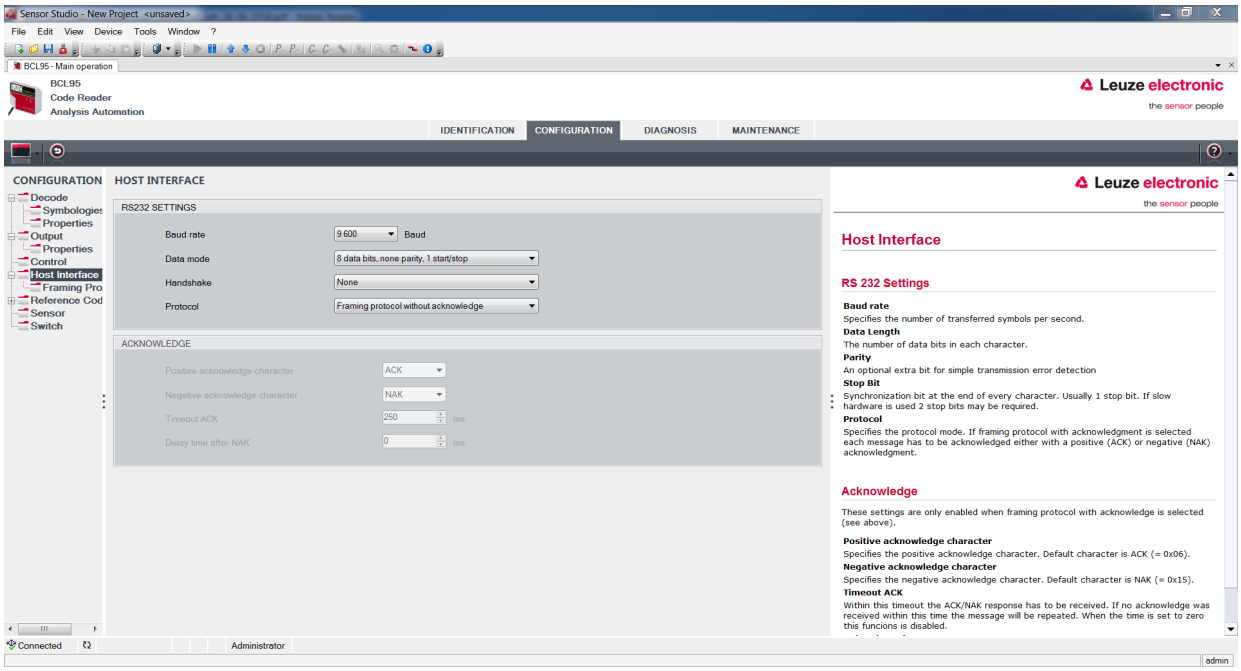

Fig. 6.8: *Host Interface* tab

Select the desired baud rate, the stop bits, the data bits, the parity and various transmission modes here. The parameters are not active until these settings have been transferred to the code reader (standard procedure).

The desired acknowledgment settings are also to be set in this selection window.

Properties dialog box (Framing Protocol)

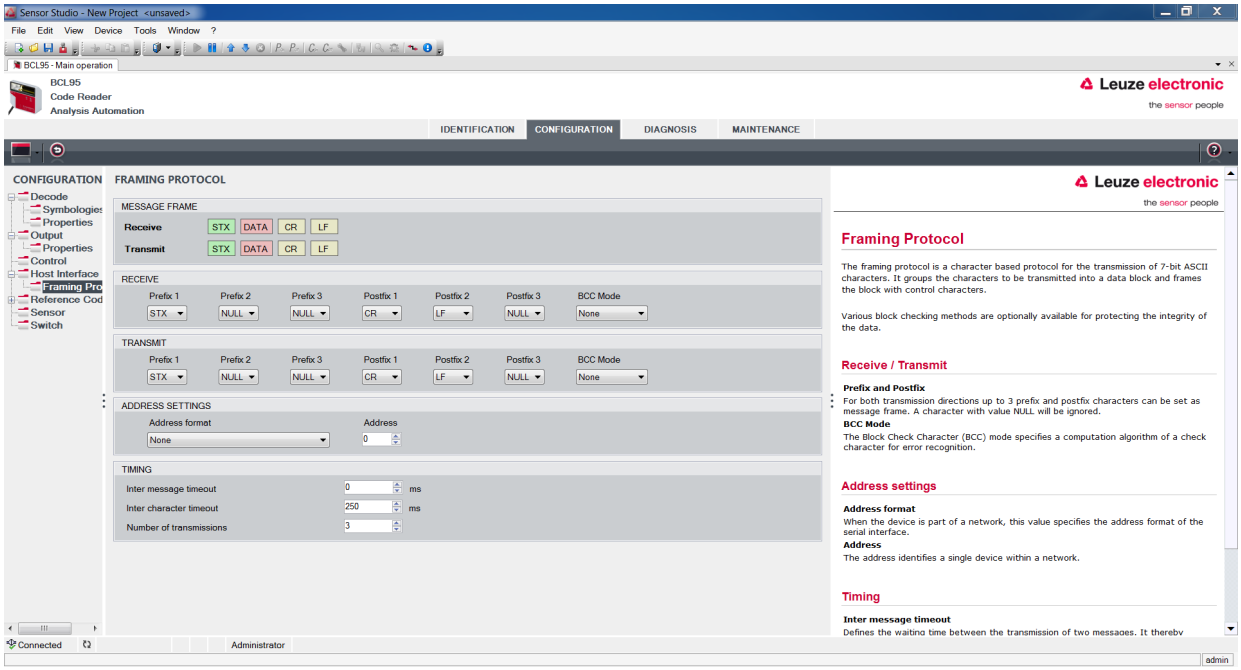

Fig. 6.9: Standard settings of the **Properties** dialog box (FRAMING PROTOCOL)

Here, you can change the address settings and the protocol for sending and receiving.

	NOTICE
	To be able to continue to communicate with a device following a parameter transfer, you may need to make appropriate adjustments to the communication properties of the device in the *Sensor Studio* configuration software.

6.5.5 Reference code tab

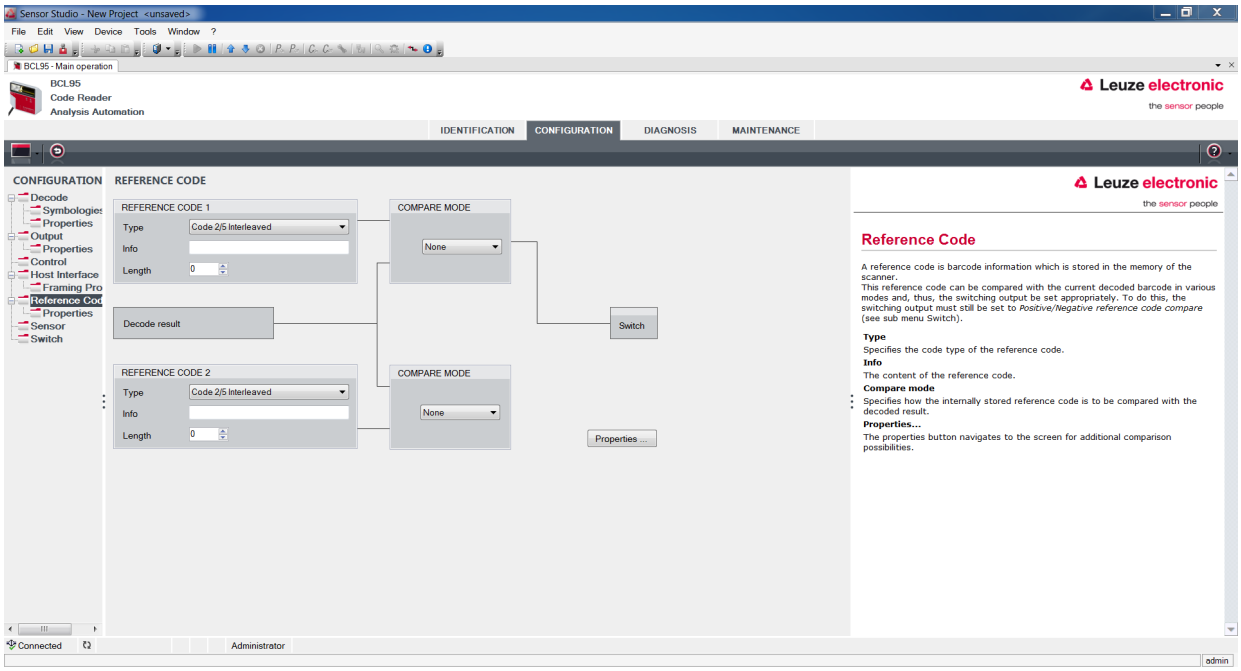

Fig. 6.10: *Reference Code* tab

A reference code is bar code information which is stored in the memory of the scanner.

The reference code can be compared with the current decoded bar code in various modes and, thus, the switching output be set appropriately. For this purpose, the switching output must be set to **Reference Code Compare** (**Positive Reference Code Compare** or **Negative Reference Code Compare**) in the **switching output (switch)** menu.

One possibility to save the reference code is to manually enter the value in this menu. For other possibilities offered by the reference code teach-in, see chapter 8 "Online commands".

Type	Selection of code type.
Contents (Info)	Contents of the reference code.
Comparison mode	Select here how the internally stored reference code is to be compared with the decoded result. For additional comparison possibilities, select the **Properties** dialog box.

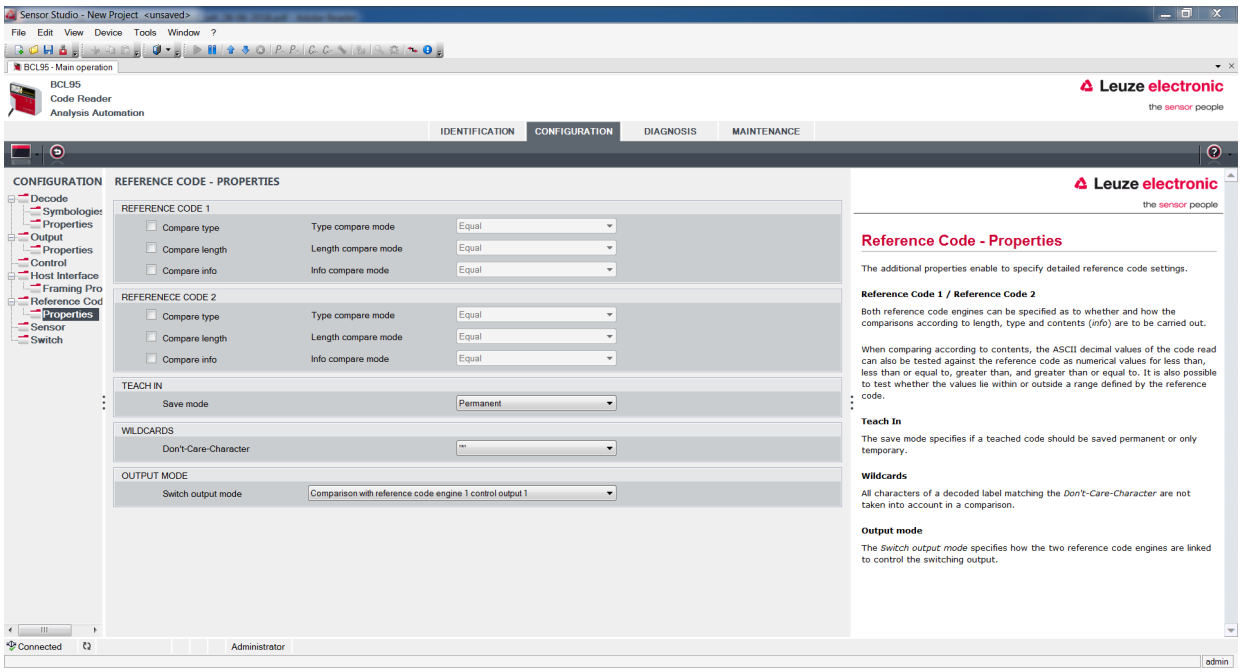

Fig. 6.11: Standard settings of the **Properties** dialog box (PROPERTIES)

6.5.6 Switching input tab

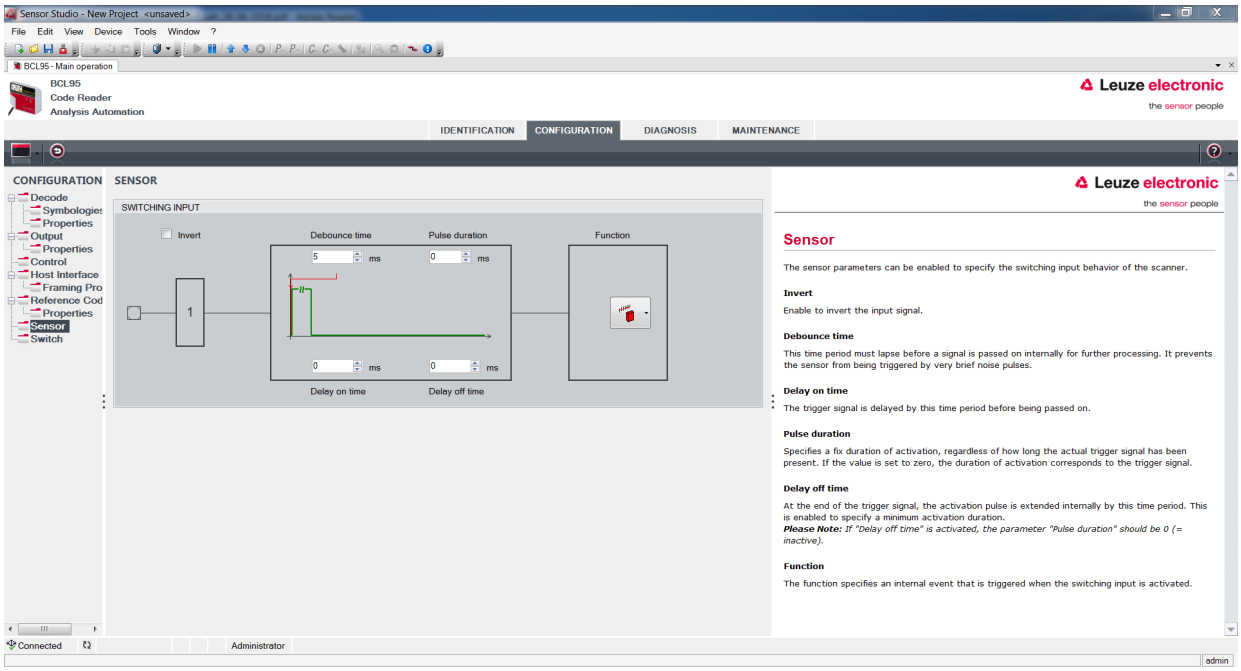

Fig. 6.12: *Switching input* tab

Inverted	Here, the input level can be inverted
Debounce time	This time period must lapse until the trigger signal is regarded as valid.
Start-up delay (Start-up delay time)	The trigger signal is passed on delayed by the specified time period.
Pulse duration	If the value is higher than "0": duration of the activation, regardless of how long the trigger signal has been applied.
Switch-off delay (Delay off time)	After the end of the trigger signal, the pulse is extended internally by this time period.
Function (Control)	Event that is started when the switching input is activated.

	NOTICE
	If switch-off delay is activated, the *pulse duration* parameter should be "0".

6.5.7 Switching output tab

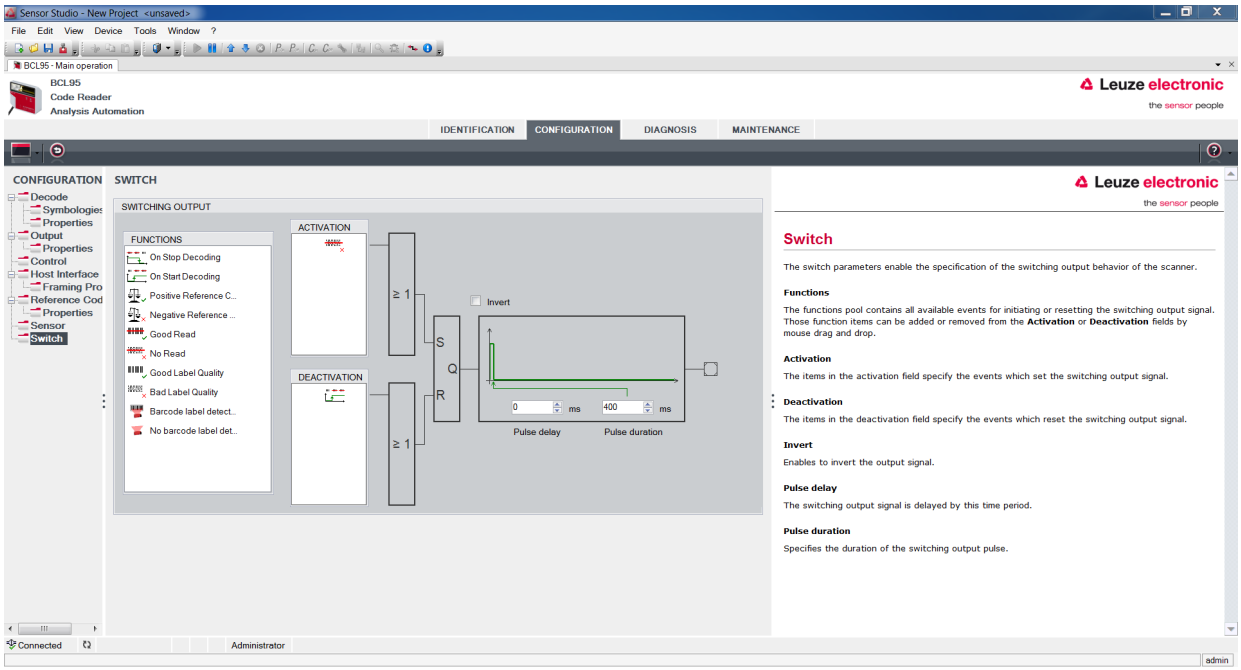

Fig. 6.13: *Switching output* tab

Activation	Select the desired event which is to initiate the switching of the switching output here. Multiple events can also be simultaneously activated.
Deactivation	Shown here is the event which results in the switching output being reset if the set pulse duration has not yet expired. Multiple events can also be simultaneously activated.
Inverted	Here, the input level can be inverted
Pulse duration	Duration of the switching output pulse.
Pulse delay (Pulse delay time)	Length of time before the switching output is activated.

6.6 Diagnosis

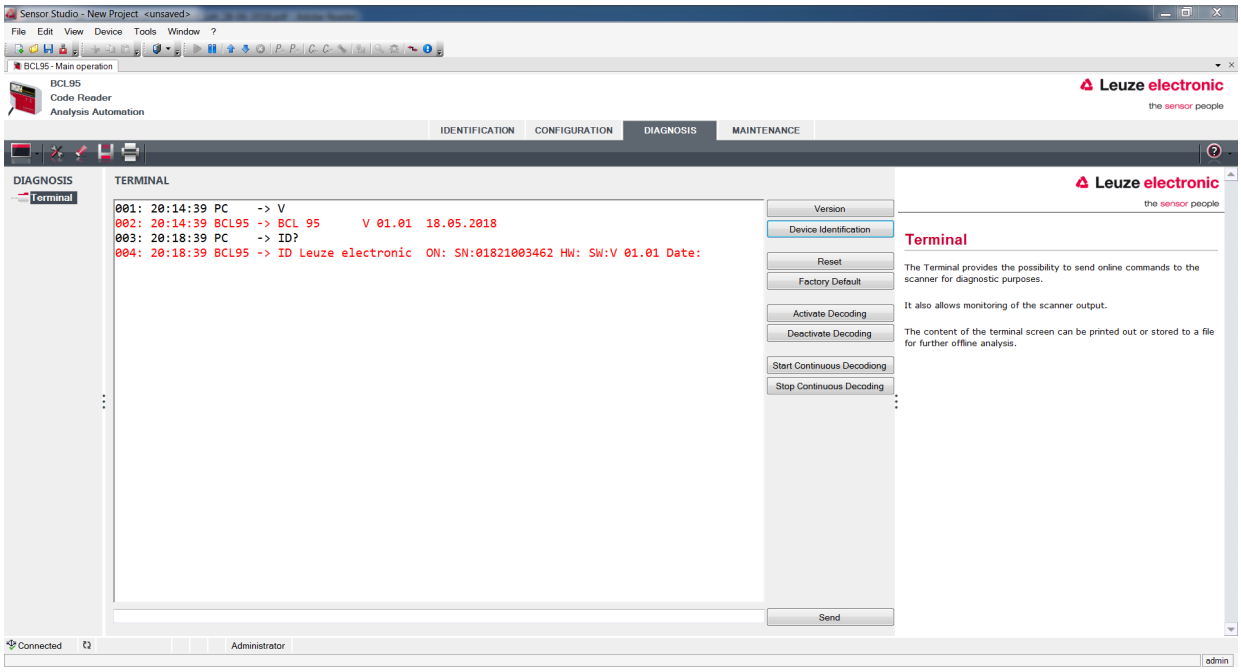

Fig. 6.14: *Diagnosis* tab

On the *Diagnosis* tab, you can send online commands to the device see chapter 8 "Online commands" as well as display the read results and the device status.

Furthermore, buttons are available for the following functions:

- Layout of the screen display
- Deleting and printing the screen content
- General terminal settings

Version	Requests device version information (see chapter 8.2 "General online commands", command "V"). You can use this command to check whether the communication between PC and scanner is functional. If you do not receive an acknowledgment, please check the interface connections or the protocol.
Device Identification	Query of the serial number as well as the hardware and software versions.
Reset	Carries out a software reset. The device is restarted and reinitialized, leaving it in the same state as when the operating voltage is switched on.
Factory Default	Activates the device with the factory settings.
Activate Decoding Deactivate Decoding	Activates/deactivates decoding.
Start Continuous Decoding Stop Continuous Decoding	Starts/stops continuous decoding.

6.7 Firmware Reload

With the *Firmware Reload* tool (*MAINTENANCE* tab), you can load a different firmware into the device.

NOTICE

You can find detailed information on the *Firmware Reload* tool in the information area of the **FIRMWARE RELOAD** dialog box and in the *Sensor Studio* online help.

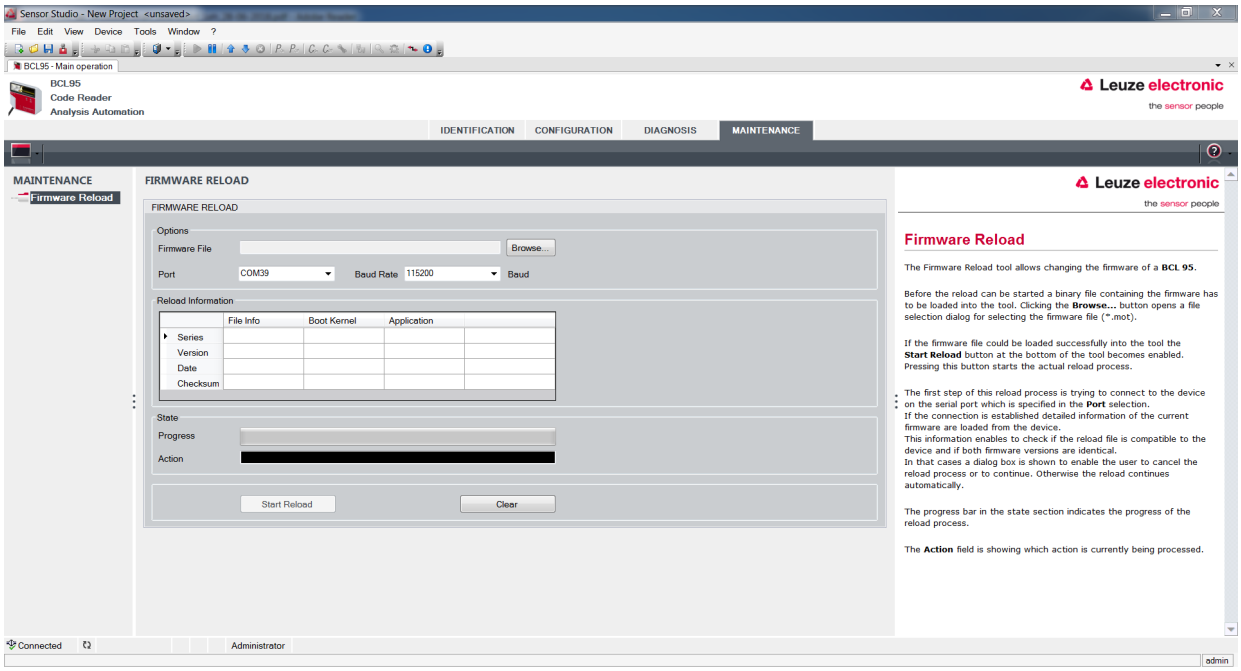

Fig. 6.15: Firmware Reload

↳ Load the file with the new firmware (**.mot*) in the *Firmware Reload* tool.
Click the [Browse] button.
A dialog box for selecting the firmware file (**.mot*) opens.

↳ Once the firmware file is loaded in the *Firmware Reload* tool, click on the [Start Reload] button to load the new firmware into the device.

- The device is connected via the serial interface specified under **Port**.
- The *Firmware Reload* tool checks whether the new firmware is compatible with the device.
  - If the new firmware is compatible, the firmware is automatically installed in the device.
  - If the new firmware is not compatible with the device or is identical with the current firmware version, a dialog box for canceling or continuing the installation is displayed.

7 Starting up the device - Configuration

7.1 Measures to be performed prior to the initial commissioning

	NOTICE
!	↳ Observe the notices for device arrangement (see chapter 4.1 "Selecting a mounting location")**)**. ↳ If possible, always trigger the bar code reader with the aid of commands or an external transducer (photoelectric sensor). ⇨ Only then can you be certain whether a code has been read (code contents are transmitted) or not (the **NoRead** character is transmitted at the end of the reading gate). ↳ Before commissioning, familiarize yourself with the operation and configuration of the device. ↳ Before connecting the operating voltage, recheck all connections and ensure that they have been properly made.

7.2 Starting the device

7.2.1 Power-on test

After connecting the operating voltage, the bar code reader performs an automatic "Power On" function test.

- During the start-up phase, the status LED flashes green.
- If the status LED is permanently lit green, the bar code reader is ready for operation. Any stored customer-specific settings are active.

7.2.2 Interface

Proper function of the interface can most easily be tested in service operation using the RS 232 interface with the *Sensor Studio* configuration software.

7.2.3 Online commands

Using the online commands, important device functions can be checked, e.g. reading activation (see chapter 8 "Online commands").

You can use online commands to directly send control and configuration commands to the device.

You can send online commands with a terminal program or with the *Sensor Studio* configuration software (see chapter 6 "Configuration and diagnostics software - Sensor Studio").

7.2.4 Problems

For information on how to proceed in the event of problems during commissioning of the devices, see chapter 10 "Diagnostics and troubleshooting".

If a problem occurs that cannot be rectified even after checking all electrical connections and settings on the devices and on the host, contact your responsible Leuze electronic subsidiary or Leuze electronic customer service (see chapter 11 "Service and support").

7.3 Starting up with factory settings

- Connect the 5 V DC operating voltage.
- If applicable, connect the switching input and the RS 232 interface.
- Switch on the operating voltage. The status LED must illuminate green.
- Activate the bar code reader via the switching input or with the **'+'** online command. The laser switches itself on.
- Hold the following sample bar code up to the bar code reader at a distance >25 mm … <150 mm.

- If reading is successful, the laser switches off. The read result is displayed on the monitor of the connected device.
- Deactivate the reading gate by removing the switching input signal or with the **'-'** online command.

7.4 Setting the configuration parameters

You commissioned the device. Usually, you will have to configure it before you can use it. With the configuration possibilities offered by the *Sensor Studio* configuration software or the device DTM, you can individually adapt the device to your specific application. For instructions regarding the various setting options, refer to the online help or to the see chapter 6.5 "Configuration parameters".

- To operate the bar code reader, it is normally sufficient to set code type and code length in accordance with the bar codes that are to be read.
- Depending on the application, you can configure the switching input according to your requirements.

Configuration settings

The configuration settings are stored in the memory of the bar code reader in parameter sets. The various parameter sets are explained to understand what is happening during configuration parameter setting (see chapter 7.4.2 "Parameter sets").

- The setting of code type and code length is usually accomplished by using the *Sensor Studio* configuration software (see chapter 6 "Configuration and diagnostics software - Sensor Studio").
- You can set other configuration parameters as follows:
  - Via the *Sensor Studio* configuration software with the buttons located under **CONFIGURATION**.
  - Via the internal setup of the bar code reader (start with the online command **CS**; see chapter 7.4.2 "Parameter sets")
  - Via online commands (see chapter 8.4 "Online commands for the parameter set operations").

7.4.1 Service mode

You can connect a PC or a terminal to the device via the RS 232 interface and configure the device through this connection (see chapter 5.7 "PC or terminal connection").

Setting the required parameters is carried out easiest in the 'Service' operating mode.

The Service mode provides the following defined operating parameters on the RS 232 interface, no matter how the device is configured for process mode:

- Transmission rate: 9600 baud
- No parity
- 8 data bits
- 1 stop bit
- Prefix: STX
- Postfix: CR, LF

Activate service interface

The service interface can be activated by holding a defined bar code label in front of the reading window during power-up (initialization phase).

LE-Service

Fig. 7.1: Bar code label "Service"

↳ While the laser switches on for approx. 1 s after power-up, the "Service" label is to be held up in front of the bar code reader at a suitable read distance.
When the device is in "Service" mode, the status LED flashes orange.

7.4.2 Parameter sets

The configuration settings are stored in the memory of the bar code reader in parameter sets.

- Factory default parameter set
- Current parameter set

Factory default parameter set

This parameter set contains the factory-set default settings for all parameters of the bar code reader. It is permanently stored in the FLASH ROM of the bar code reader.

The parameter set with the default settings is loaded into the memory of the bar code reader:

- The first time the device is commissioned after delivery
- With the *Sensor Studio* configuration software via the [Factory Default] button in the **DIAGNOSIS** menu.
- After the online command **PC20** (see chapter 8.4 "Online commands for the parameter set operations")
- If the checksums of the current parameter set are invalid

Current parameter set

In this parameter set, the current settings for all device parameters are stored. When the bar code reader is in operation, the current parameter set is stored in the EEPROM of the bar code reader.

The current parameter set is loaded into the main memory of the bar code reader with the **Copy parameter set** parameter set command (see chapter 8.4 "Online commands for the parameter set operations").

You can save the current parameter set as follows:

- Copying a valid parameter set from the host computer into the bar code reader
- Off-line configuration using the *Sensor Studio* configuration software and then subsequently loading to the bar code reader

	NOTICE
!	To load the configuration into the bar code reader, select online mode.

8 Online commands

You can use online commands to directly send control and configuration commands to the device. To do this, connect the bar code reader to a computer (host) (see chapter 5.7 "PC or terminal connection").

NOTICE	
	You can send online commands with a terminal program or with the *Sensor Studio* configuration software (see chapter 6 "Configuration and diagnostics software - Sensor Studio").

Information about the transmission protocol: see chapter 6.5.4 "Host interface tab".

Using the online commands you can:

- Control/decode the reading gate.
- read/write/copy parameters.
- carry out an automatic configuration.
- Teach-in/set a reference code.
- call up error messages.
- call up statistical device information.
- carry out a software reset in order to reinitialize the device.

NOTICE	
	For diagnostics, you can send online commands to the device via the *Sensor Studio* configuration software (**DIAGNOSIS > Terminal**).

8.1 Overview of commands and parameters

NOTICE	
	The following chapters describe the input of online commands via a terminal program. To input online commands via the *Sensor Studio* configuration software see chapter 6 "Configuration and diagnostics software - Sensor Studio"

Syntax

Online commands consist of one or two ASCII characters followed by command parameters.

No separation characters may be entered between the command and the command parameter(s). Both small and capitalized letters can be used.

Tab. 8.1: Syntax example

Command ’CA’:	autoConfig function
Parameter ’+’:	Activation
Transmitted is:	’CA+’

Notation

Commands, parameters and returned data are enclosed between single quotation marks ’ ’ in the text of this manual.

NOTICE	
	Most online commands are acknowledged by the device and any requested data returned. For commands that are not acknowledged, command execution can be observed or monitored directly on the device.

8.2 General online commands

Software version number

Command	’V’
Description	Requests device version information
Parameter	None
Acknowledgment	Example: ’BCL 95 V 01.15 17.05.2018’ The first line contains the device type of the bar code reader, followed by the device version number and version date. The data which is actually displayed may vary from the values given here.

NOTICE

You can use this command to check whether the communication between PC and scanner is functional. If you do not receive an acknowledgment, please check the interface connections or the protocol.

Software reset

Command	’H’
Description	Carries out a software reset. The device is restarted and reinitialized, leaving it in the same state as when the operating voltage is switched on.
Parameter	None
Acknowledgment	’S’ (start signal)

autoConfig

Command	’CA’		
Description	Activates or deactivates the *autoConfig* function. Certain bar code recognition parameters are programmed automatically in the setup by the bar code labels which the device reads while the ’autoConfig’ function is active.		
Parameter	’+’	Activates ’autoConfig’	
	’/’	Rejects the last code read	
	’-’	Deactivates ’autoConfig’ and stores the decoded data in the current parameter set	
Acknowledgment	’CSx’		
	x	Status	
		’0’	valid ’CA’ command
		’1’	Invalid command
		’2’	’autoConfig’ could not be activated
		’3’	’autoConfig’ could not be deactivated
		’4’	Result could not be deleted
Description	’xx yy zzzzzz’		
	xx	Code type of the read code	
		’01’	2/5 Interleaved
		’02’	Code 39
		’03’	Code 32
		’06’	UPC-A / UPC-E
		’07’	EAN-8 / EAN-13
		’08’	Code 128, EAN 128
		’09’	Pharmacode
		’10’	EAN Addendum
		’11’	Codabar
		’12’	Code 93
	yy	Number of digits of the read code	
	zzzzzz	Contents of the decoded label. A ↑ appears if the label was not correctly read.	

Manual definition of the reference code

Command	’RS’		
Description	This command can be used to define a new reference code in the device by means of direct input via the serial interface. The data is saved in the parameter set according to your input under reference code 1 or 2 and stored in the working buffer for direct further processing.		
Parameter	’RSyvxxzzzzzzzz’ y, v, x and z are placeholders (variables) for the actual input.		
	y	Def. reference code no.	
		’1’	(code 1)
		’2’	(code 2)
	v	Storage location for reference code:	
		’0’	RAM+EEPROM
		’3’	RAM only
	xx	Def. code type (see command ’CA’)	
	z	Def. code information (1 … 30 characters)	
Acknowledgment	’RSx’		
	x	Status	
		’0’	Invalid Rx command
		’1’	Invalid command
		’2’	Insufficient memory for reference code
		’3’	Reference code has not been saved
		’4’	Reference code invalid
Example	Entry = ’RS130678654331’ • Code 1 (1) • RAM only (3) • UPC (06) • Code information		

Teach-in

Command	’RT’		
Description	This command enables a reference code to be defined quickly by reading an example label.		
Parameter	’RTy’		
	y	Function	
		’1’	Defines reference code 1
		’2’	Defines reference code 2
		’+’	Activates the definition of reference code 1 or 2
		’-’	Ends the teach event
Acknowledgment	The device first responds with the command ’RS’ and corresponding status (see command ’RS’). After a bar code has been read, it sends the result in the following format: ’RCyvxxzzzzz’ y, v, x and z are placeholders (variables) for the actual input.		
	y	Def. reference code no.	
		’1’	(code 1)
		’2’	(code 2)
	v	Storage location for reference code:	
		’0’	RAM+EEPROM
		’3’	RAM only
	xx	Def. code type (see command ’CA’)	
	z	Def. code information (1 … 30 characters)	

NOTICE

With this function, only code types are recognized that are identified using the *’autoConfig’* function or which were set in the set-up.

↳ After each reading via an **’RTy’** command, explicitly switch off the function again since failure to do so will interfere with other commands as well as prevent execution of a new **’RTy’** command.

Reading a reference code

Command	’RR’		
Description	The command reads out the reference code defined in the device. If no parameters are specified, all defined codes are output.		
Parameter	<reference code number>		
	’1’	Reference code 1	
	’2’	Reference code 2	
Acknowledgment	If no reference codes are defined, the device responds with the ’RS’ command and corresponding status (see command ’RS’). With valid codes, output is in the following format: ’RCyvxxzzzzz’ y, v, x and z are placeholders (variables) for the actual input.		
	y	Def. reference code no.	
		’1’	(code 1)
		’2’	(code 2)
	v	Storage location for reference code:	
		’0’	RAM+EEPROM
		’3’	RAM only
	xx	Def. code type (see command ’CA’)	
	z	Def. code information (1 … 30 characters)	

Alignment mode

Command	’JP’	
Description	This command is used for simplified mounting and alignment of the device in static installation situations. After activating the function with ’JP+’, the scanner continuously supplies status information to the serial interfaces. With this online command, the scanner is set to terminate the decoding after 100 successfully decoded labels and output the status information. Subsequently, the read process is reactivated automatically. As status, the output returns the following values: • Scans which contain the valid label information on the basis of 100 scans • Decoding result These values can be used to determine the decoding quality: • If the reading quality is high, the laser beam flashes in brief, regular intervals. • The worse the decoder decodes, the longer the pauses become during which the laser light is switched off.	
Parameter	’+’	Starts the adjustment mode.
	’-’	Ends the adjustment mode.
Acknowledgment	’xxxxx_yyyyy’	
	xxxxx	"Scans since reading gate release" (Scans_with info): Number of scans that contain valid label information. The maximum value is 100.
	yyyyy	Bar code information.

8.3 Online commands for system control

Activate sensor input

Command	’+’
Description	The command activates decoding.
Parameter	No
Acknowledgment	None

Deactivate sensor input

Command	’-’
Description	The command activates decoding.
Parameter	No
Acknowledgment	None

Activate continuous decoding

Command	’C+’
Description	The command activates continuous decoding (continuous reading).
Parameter	No
Acknowledgment	None

Deactivate continuous decoding

Command	’C-’
Description	The command deactivates continuous decoding (end continuous reading).
Parameter	No
Acknowledgment	None

Activate switching output

Command	’OA’		
Description	The command activates the switching output.		
Parameter	’OAx’: Activate switching output		
	x	Switching output no.	
		’1’	(Output 1)
Acknowledgment	None		

Deactivate switching output

Command	’OD’		
Description	The command deactivates the switching output.		
Parameter	’ODx’: Deactivate switching output		
	x	Switching output no.	
		’1’	(Output 1)
Acknowledgment	None		

8.4 Online commands for the parameter set operations

Definitions

- **<BCC type>** Type of checksum calculation.

  ’0’: No checksum

  ’3’: XOR checksum (mode 3)
- **<PS type>** Parameter set type

  ’0’: Current parameter set (data stored in the EEPROM (non-volatile))

  ’1’: Reserved

  ’2’: Standard parameter set (not changeable)

  ’3’: Operating values (data in the RAM, will be lost after reset)
- **<Status>** Mode of parameter processing

  '0': Does not perform a reset following the write operation; no other parameters follow.

  '1': Does not perform a reset following the write operation; other parameters follow.

  '2': Subsequently performs a reset, no additional parameters follow.
- **<Start address>** Relative address of the parameter within the parameter set
- **<Para0L> <Para0H>… <Para122L> <Para122H>**:

  Parameter set data of the message. The sequence of the data is arranged identically to the device, i.e. when a word is transmitted, first the low byte is sent then the high byte. The parameter set data is converted for transmission from HEX format to a 2-byte-ASCII format. During the conversion, two ASCII characters – representing the *lower nibble* and the *higher nibble* – are created for each HEX value.

  Example:

Decimal	Hex	Transmission
4660	0x1234	'1' '2' '3' '4' = 31h 32h 33h 34h

- Para0H = 31h, Para0L = 32h, Para1H = 33h, Para1L = 34h

  Taking into consideration the maximum message length and the remaining command parameters, a maximum of 123 bytes on parameter data (246 bytes on message data) can be transmitted in a single operation.

  Valid values: '0' … '9', 'A' … 'F'
- **<Acknowledgment>**:

  Acknowledgment of the transmitted message

  '0': Valid transfer

  '1': Invalid message

  '2': Invalid message length

  '3': Invalid block check type

  '4': Invalid bloc checksum

  '5': Invalid data length

  '6': Invalid message data

  '7': Invalid start address

  '8': Invalid parameter set

  '9': Invalid parameter set type

Copying parameter set

Command	’PC’		
Description	The command copies complete parameter sets.		
Parameter	’03’	Copy parameters from the EEPROM into the RAM and initialize all associated functions	
	’20’	Copy standard parameters from the FLASH into the EEPROM and RAM and initialize all relevant functions	
	’30’	Copy parameters from the RAM into the EEPROM	
Acknowledgment	’PSx’		
	x	Status	
		’0’	Valid transfer
		’1’	Invalid message
		’2’	Invalid message length
		’3’	Invalid block check type
		’4’	Invalid block check checksum
		’5’	Invalid data length
		’6’	Invalid message data
		’7’	Invalid start address
		’8’	Invalid parameter set
		’9’	Invalid parameter type
Example	’PC20’ loads the default parameter set (factory setting)		

Requesting parameter set from device

Command	’PR’		
Description	The command requests the parameter data from the device. The <PS type> parameter indicates from which parameter set the data are to be transferred.		
Parameter	<BCC type> <PS type> <Start address> <Data length>		
Acknowledgment	’PSx’		
	x	Status	
		’0’	Valid transfer
		’1’	Invalid message
		’2’	Invalid message length
		’3’	Invalid block check type
		’4’	Invalid block check checksum
		’5’	Invalid data length
		’6’	Invalid message data
		’7’	Invalid start address
		’8’	Invalid parameter set
		’9’	Invalid parameter type
Example	’PR00102004’ Beginning with address 102, four (004) bytes are read out and transferred.		

Acknowledge parameter message

Command	’PS’		
Description	The command acknowledges the received message and delivers an acknowledgment status which indicates whether the message was valid or invalid.		
Parameter	’PSx’		
	x	Status	
		’0’	Valid transfer
		’1’	Invalid message
		’2’	Invalid message length
		’3’	Invalid block check type
		’4’	Invalid block check checksum
		’5’	Invalid data length
		’6’	Invalid message data
		’7’	Invalid start address
		’8’	Invalid parameter set
		’9’	Invalid parameter type

Transfer parameters

Command	’PT’		
Description	The command transmits parameter data starting from the defined address and stores them in an intermediate buffer. If the status indicates that further messages follow, these are also stored in the intermediate buffer before they are then stored under the corresponding parameter set type in the EEPROM. The transmission can optionally occur with a block check test of the message data.		
Parameter	<BCC type> <PS type> <Status> <Start address> <Para0L> <Para0H> [… <Para122L>][<BCC>]		
Acknowledgment	’PSx’		
	x	Status	
		’0’	Valid transfer
		’1’	Invalid message
		’2’	Invalid message length
		’3’	Invalid block check type
		’4’	Invalid block check checksum
		’5’	Invalid data length
		’6’	Invalid message data
		’7’	Invalid start address
		’8’	Invalid parameter set
		’9’	Invalid parameter type
Example	’PT03203305’ Address 33 (equal scans) is set to 5. Save in RAM with reset (immediate acceptance of the change and temporary storage)		

9 Care, maintenance and disposal

Cleaning

Clean the glass window of the bar code reader with a soft, lint-free cloth before mounting if necessary.

	NOTICE
!	**Do not use aggressive cleaning agents!** ↳ Do not use aggressive cleaning agents such as thinner or acetone for cleaning the device.

	NOTICE
!	↳ To clean the optics cover, use only a lint-free cloth. Tips and hard objects damage the lens.

Maintenance

Usually, the bar code reader does not require any maintenance by the operator.

Repairs to the device must only be carried out by the manufacturer.

↳ For repairs, contact your responsible Leuze electronic subsidiary or Leuze electronic customer service (see chapter 11 "Service and support").

Firmware Reload

You can load a different firmware into the device using the *Sensor Studio* configuration software (see chapter 6.7 "Firmware Reload").

Disposing

↳ For disposal observe the applicable national regulations regarding electronic components.

10 Diagnostics and troubleshooting

The LED displays provide information about possible warnings or errors (see chapter 3.5 "Display elements"). Using the LED displays, you can determine the causes and initiate trouble shooting measures.

NOTICE	
	Contact Leuze electronic subsidiary/customer service ↳ Please contact your responsible Leuze electronic subsidiary or Leuze electronic customer service if you cannot rectify faults and errors with the configuration software (see chapter 11 "Service and support").

Tab. 10.1: Status LED

Error	Possible error cause	Measures
Off	No supply voltage connected to the device.	Check supply voltage.
Red, flashing	There is a device warning.	Query diagnostic data in the device and carry out the resulting measures or reset.
Red, continuous light	Serious error No function possible.	Internal device error. Contact Leuze electronic customer service (see chapter 11 "Service and support").
Orange, flashing	Service operation is active.	Reset service operation, e.g. by resetting or interrupting the supply voltage.

Error	Possible error cause	Measures
No communication possible	Incorrect wiring.	Check wiring. RxD and TxD cables may be swapped.
	Different protocol settings.	Check protocol settings in the device and in the *Sensor Studio* configuration software or switch device to the *Service* operating mode.
No code reading possible	Code reading not possible (quality).	Improve code quality! Entire code in laser line?
	Code is not enabled.	Check entries in the code table (code type and length).
	Excessive reflections.	Increase angle of rotation of the laser beam to > 10° with respect to vertical.

11 Service and support

24-hour on-call service at:

+49 7021 573-0

Service hotline:

+49 7021 573-123

Monday to Friday 8.00 a.m. to 5.00 p.m. (UTC+1)

E-mail:

service.identify@leuze.de

Repair service and returns:

Procedure and Internet form can be found at

www.leuze.com/repair

Return address for repairs:

Service center

Leuze electronic GmbH + Co. KG

In der Braike 1

D-73277 Owen / Germany

11.1 What to do should servicing be required?

NOTICE

Please use this chapter as a master copy should servicing be required!

↳ Enter the contact information and fax this form together with your service order to the fax number given below.

Customer data (please complete)

Device type:	
Serial number:	
Firmware:	
Status of LEDs:	
Error description:	
Company:	
Contact person/department:	
Phone (direct dial):	
Fax:	
Street/No:	
ZIP code/City:	
Country:	

Leuze Service fax number:

+49 7021 573 - 199

12 Technical data

12.1 General specifications

Tab. 12.1: Optics

Light source	Laser diode
Wavelength	655 nm (visible red light)
Beam exit	Frontal or lateral
Impulse duration (acc. to the measurement conditions in accordance with IEC 60825-1)	<120 µs
Max. output power (peak)	2.1 mW
Laser class	1 acc. to IEC 60825-1:2014
Scanning rate	600 scans/s
Reading distance / reading field width	see chapter 12.2 "Reading fields"
Resolution	m = 0.15 mm … 0.5 mm (6 mil … 20 mil)

Tab. 12.2: Code specifications

Code types	2/5 Interleaved, Code 39, Code 128, EAN 128, Pharmacode, Code 93, Codabar, EAN Addendum, Code 32, EAN-8 / EAN-13, UPC-A / UPC-E
Module width (distance dependent)	0.15 mm … 0.5 mm (6 mil … 20 mil)
Print quality	Grade A, B acc. to ISO/IEC 15416
Angle of rotation	> 10°

Tab. 12.3: Interfaces

Process interface	RS 232
Baud rate	4800 … 57600 baud
Data formats	Data bits: 7, 8 Parity: none, even, odd Stop bit: 1, 2
Service interface	RS 232 with fixed data format 9600 Bd, 8 data bits, no parity, 1 stop bit <STX> <data> <CR><LF>
Protocols	Framing protocol with/without acknowledgment Software handshake X ON / X OFF
Switching input/output	1 switching input 5 V DC 1 switching output 5 V … 30 V, 20 mA

Tab. 12.4: Electrical equipment

Operating voltage	4.75 … 5.5 V DC SELV (Safe Extra Low Voltage)
Power consumption	1.75 W
Current consumption (recommended power supply unit)	Max. 450 mA (peak) Nominal 350 mA at 5 V DC
Switching input	5 V DC
Switching output	5 V … 30 V, 20 mA

CAUTION

UL applications!

For UL applications, use is only permitted in LPS/Class 2 circuits in accordance with the NEC (National Electric Code).

Tab. 12.5: Mechanical data

Degree of protection	IP 54
Connection type	Connection cable, 2 m long, 6-wire with open cable end Pigtail with M12 connector, 8-pin
Weight	Approx. 210 g
Dimensions	see chapter 12.3 "Dimensioned drawings"
Fastening	2 M2.5 mounting threads, 4 mm deep, on the side of the device 2 M3 mounting threads, 6 mm deep, on the rear of the device
Housing	Diecast zinc
Optics cover	Glass

Tab. 12.6: Environmental data

Ambient temperature Operation Storage	 +5 °C … +40 °C -20 °C … +60 °C
Air humidity	Max. 90% rel. humidity, non-condensing
Electromagnetic compatibility	EN 61326-1:2013-01, FCC 15-CFR 47 Part 15 (09-07-2015) Limits Class B
Vibration	IEC 60068-2-6, test Fc
Shock	IEC 60068-2-27, test Ea
Certifications	UL 60950-1, CAN/CSA C22.2 No. 60950-1-07
Conformity	CE, CDRH, UL

12.2 Reading fields

NOTICE	
	Please note that the actual reading fields are also influenced by factors such as labeling material, printing quality, scanning angle, printing contrast etc., and may thus deviate from the reading fields specified here. The origin of the read distance always refers to the front edge of the housing of the beam exit.

BCL95 M0/R2

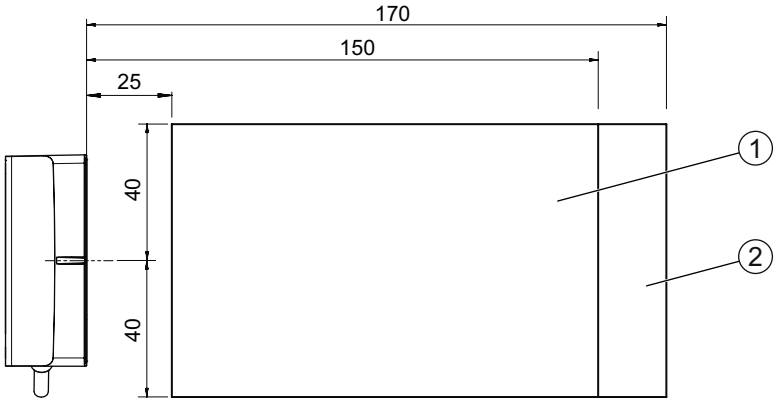

BCL95 M2/R2

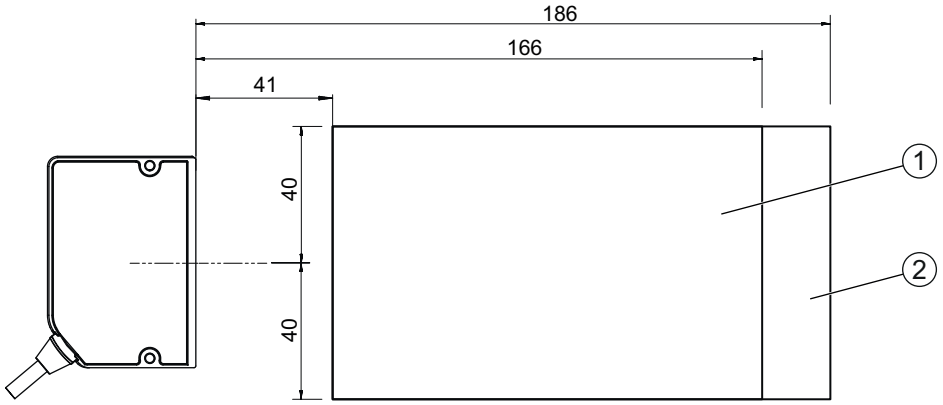

all dimensions in mm

The reading fields are specified for Code128 (four-width code).

1 M = 0.165 mm … 0.2 mm (6,5 mil … 8 mil)

2 M = 0.2 mm … 0.5 mm (8 mil … 20 mil)

Fig. 12.1: BCL 95 reading field

12.3 Dimensioned drawings

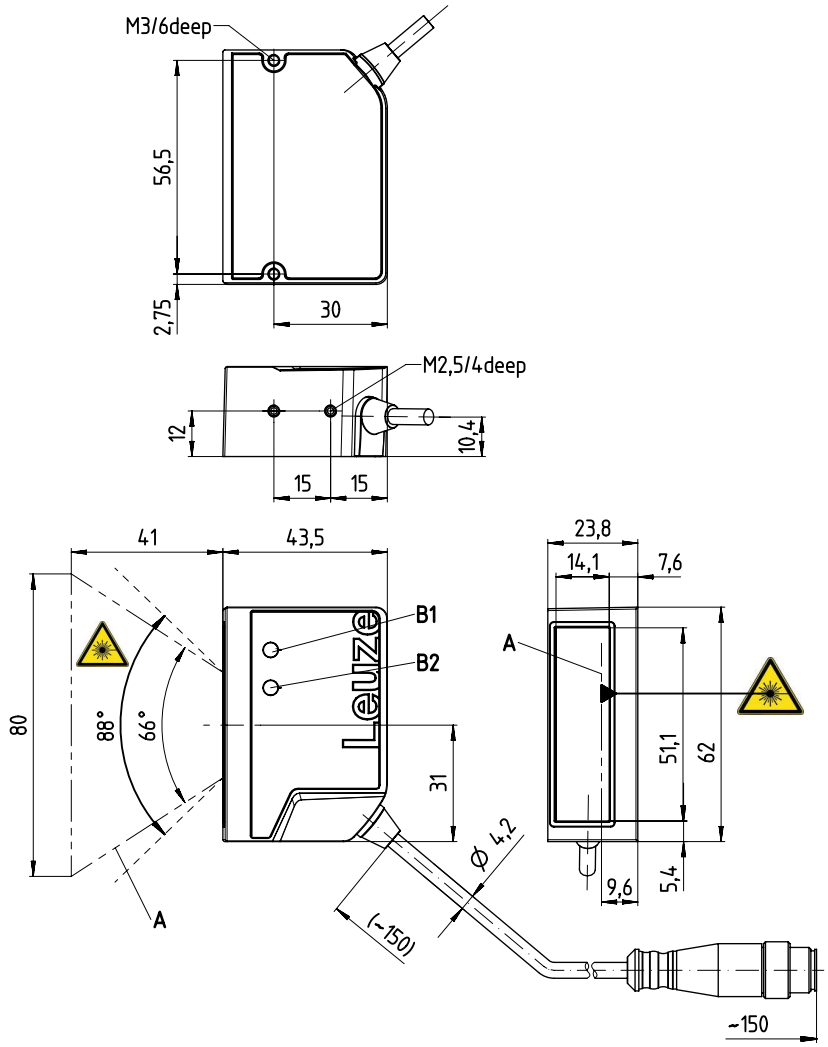

all dimensions in mm

A Laser beam

B1 Indicator diode – decode LED

B2 Indicator diode – status LED

Fig. 12.2: BCL 95 M2/R2 – frontal beam exit

	NOTICE
	Align device! For exact positioning of the laser beam in the application, the device must be aligned.

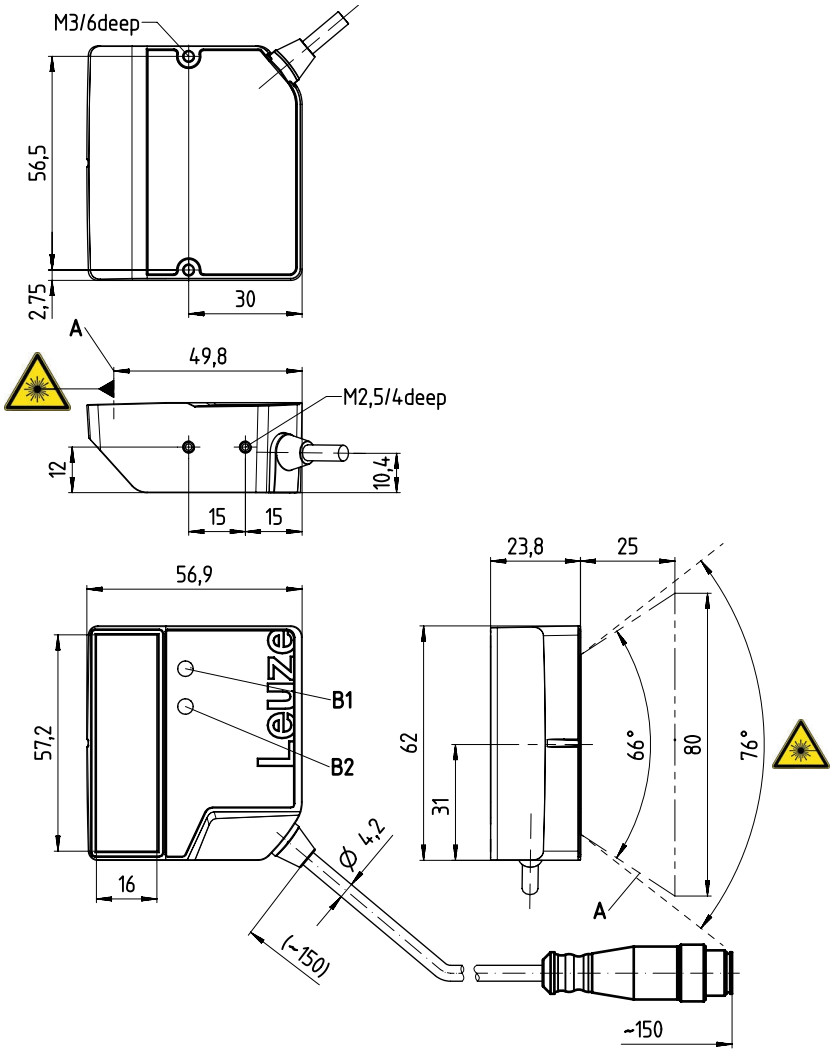

all dimensions in mm

A Laser beam

B1 Indicator diode – decode LED

B2 Indicator diode – status LED

Fig. 12.3: BCL 95 M0/R2 – lateral beam exit

	NOTICE
!	**Align device!** For exact positioning of the laser beam in the application, the device must be aligned.

13 Order guide and accessories

13.1 Type overview

Tab. 13.1: Part numbers

Part no.	Part designation	Description
50138197	BCL 95 M0R2-150-M12.8	Single line scanner, RS 232 interface Beam exit: lateral Connection: pigtail with M12 connector, 8-pin
50138198	BCL 95 M2R2-150-M12.8	Single line scanner, RS 232 interface Beam exit: frontal Connection: pigtail with M12 connector, 8-pin
50138195	BCL 95 M0R2	Single line scanner, RS 232 interface Beam exit: lateral Connection cable, 6 wire, 2 m
50138196	BCL 95 M2R2	Single line scanner, RS 232 interface Beam exit: frontal Connection cable, 6 wire, 2 m

13.2 Accessories

Tab. 13.2: Accessories – connection cables

Part no.	Part designation	Description
50135121	KD U-M12-8A-P1-020	Connection 1: connector, M12, axial, female, A-coded, 8-pin Connection 2: open cable end Shielded: no Cable length: 2000 mm Material sheathing: PUR
50135122	KD U-M12-8A-P1-050	Connection 1: connector, M12, axial, female, A-coded, 8-pin Connection 2: open cable end Shielded: no Cable length: 5000 mm Material sheathing: PUR

Tab. 13.3: Accessories - software

Sensor Studio configuration software Download at www.leuze.com (see chapter 6.2.1 "Downloading configuration software")	*Sensor Studio* designed according to the FDT/DTM concept. Contains: communication DTM and device DTM

NOTICE	
	On request, Leuze electronic can make available the *BCL Configuration Tool* editor program.

14 EC Declaration of Conformity

The bar code readers of the BCL 95 series have been developed and manufactured in accordance with the applicable European standards and directives.

15 Appendix

15.1 Bar code samples

1122334455

Module 0.3

Fig. 15.1: Code type 01: Interleaved 2 of 5

135AC

Module 0.3

Fig. 15.2: Code type 02: Code 39

a121314a

Module 0.3

Fig. 15.3: Code type 11: Codabar

abcde

Module 0.3

Fig. 15.4: Code 128

leuze

Module 0.3

Fig. 15.5: Code type 08: EAN 128

1 23456 78901 2

SC 2

Fig. 15.6: Code type 06: UPC-A

SC 3

Fig. 15.7: Code type 07: EAN 8