Technical data sheet
Safety light curtain transmitter

Part no.: 68008906

MLC502T90-600

Figure can vary

Contents

- Technical data
- Dimensioned drawings
- Electrical connection
- Circuit diagrams
- Operation and display
- Suitable receivers
- Part number code
- Notes
- Accessories

ПРОМЭЛЕКТРОНИКА / sales@prom-elec.com

Technical data

Basic data

Series	MLC 500
Device type	Transmitter
Contains	2x BT-NC sliding block
Application	Access guarding
	Danger zone guarding

Functions

Functions	Test signal input
	Transmission channel changeover

Characteristic parameters

Type	4, IEC/EN 61496
SIL	3, IEC 61508
SILCL	3, IEC/EN 62061
Mission time T_M	20 years, EN ISO 13849-1

Protective field data

Resolution	90 mm
Protective field height	600 mm
Operating range	0 ... 20 m

Optical data

Synchronization	Optical between transmitter and receiver
Light source	LED, Infrared
LED light wavelength	940 nm
Transmitted-signal shape	Pulsed
LED risk group	Exempt group (in acc. with EN 62471:2008)

Electrical data

Protective circuit	Overvoltage protection
	Short circuit protected

Performance data

Supply voltage U_B	24 V, DC, -20 ... 20 %
Current consumption, max.	50 mA
Fuse	2 A semi time-lag

Inputs

Number of digital switching inputs	1 Piece(s)

Switching inputs

Type	Digital switching input
Switching voltage high, min.	18 V
Switching voltage low, max.	2.5 V
Switching voltage, typ.	22.5 V
Voltage type	DC

Connection

Number of connections	1 Piece(s)

Connection 1

Function	Machine interface
Type of connection	Connector
Thread size	M12
Material	Metal
No. of pins	5 -pin

Cable properties

Permissible conductor cross section, typ.	0.25 mm²
Length of connection cable, max.	100 m
Permissible cable resistance to load, max.	200 Ω

Mechanical data

Dimension (W x H x L)	29 mm x 666 mm x 35.4 mm
Housing material	Metal
Metal housing	Aluminum
Lens cover material	Plastic / PMMA
Material of end caps	Diecast zinc
Net weight	750 g
Housing color	Yellow, RAL 1021
Type of fastening	Groove mounting
	Mounting bracket
	Mounting on Device Column
	Swivel mount

Operation and display

Type of display	LED
Number of LEDs	2 Piece(s)

Environmental data

Ambient temperature, operation	-30 ... 55 °C
Ambient temperature, storage	-30 ... 70 °C
Relative humidity (non-condensing)	0 ... 95 %

Certifications

Degree of protection	IP 65
Protection class	III
Certifications	c CSA US
	c TÜV NRTL US
	TÜV Süd
Vibration resistance	50 m/s²
Shock resistance	100 m/s²
US patents	US 6,418,546 B

Classification

Customs tariff number	85365019
eCl@ss 5.1.4	27272704
eCl@ss 8.0	27272704
eCl@ss 9.0	27272704
eCl@ss 10.0	27272704
eCl@ss 11.0	27272704
ETIM 5.0	EC002549
ETIM 6.0	EC002549
ETIM 7.0	EC002549

Dimensioned drawings

All dimensions in millimeters

Calculation of the effective protective field height $H_{PFE} = H_{PFN} + B + C$

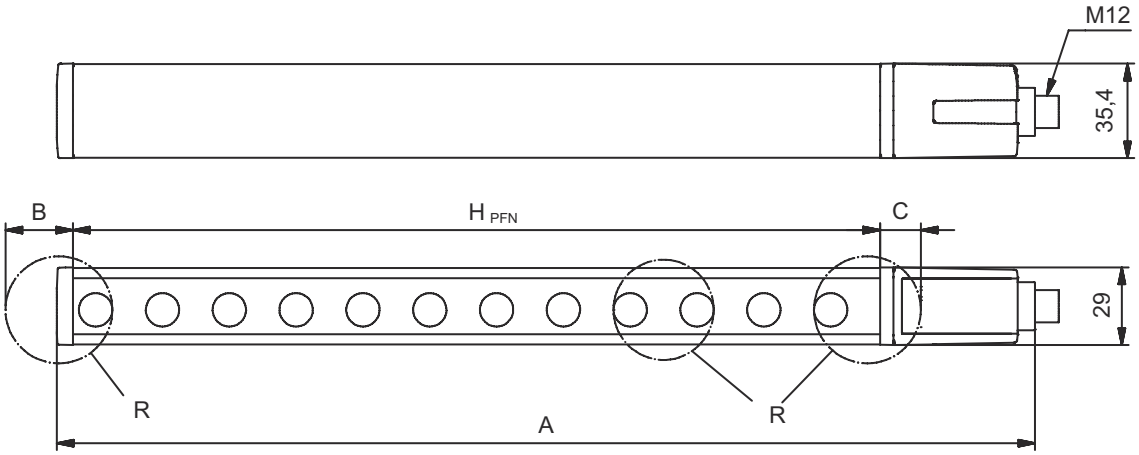

H_{PFE}	Effective protective field height = 690 mm	C	40 mm
H_{PFN}	Nominal protective field height = 600 mm	R	Effective protective field height H_{PFE} goes beyond the dimensions of the optics area to the outer borders of the circles labeled with R.
A	Total height = 666 mm		
B	50 mm		

ПРОМЭЛЕКТРОНИКА / sales@prom-elec.com

Electrical connection

Connection 1

Function	Machine interface
Type of connection	Connector
Thread size	M12
Type	Male
Material	Metal
No. of pins	5 -pin
Encoding	A-coded
Connector housing	FE/SHIELD

Pin	Pin assignment	Conductor color
1	VIN1	Brown
2	n.c.	White
3	VIN2	Blue
4	Test in	Black
5	FE/SHIELD	Gray

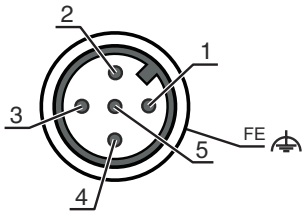

Circuit diagrams

Transmission channel C1, OSSDs deactivated on the receiver

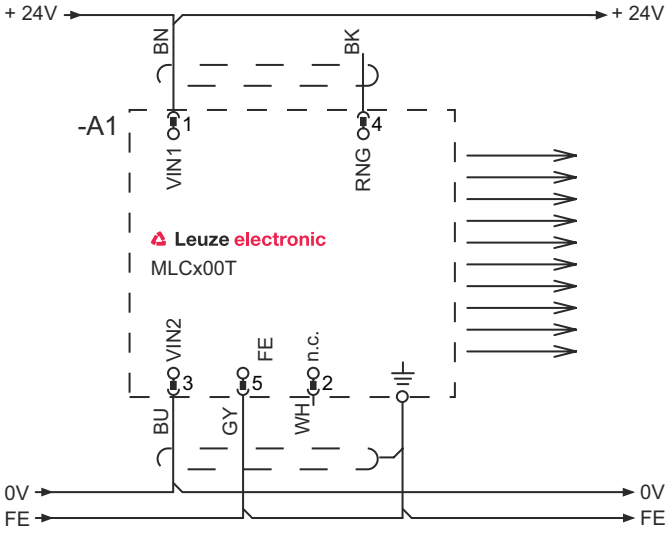

1 VIN1 = +24 V
3 VIN2 = 0 V
4 RNG = 0 V or open

Transmission channel C1, OSSDs activated on the receiver

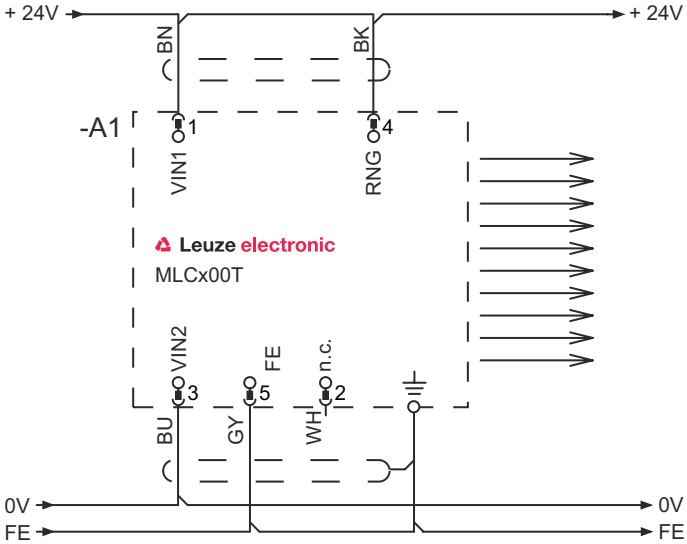

1 VIN1 = +24 V
3 VIN2 = 0 V
4 RNG = +24 V

Circuit diagrams

Transmission channel C2, OSSDs deactivated on the receiver

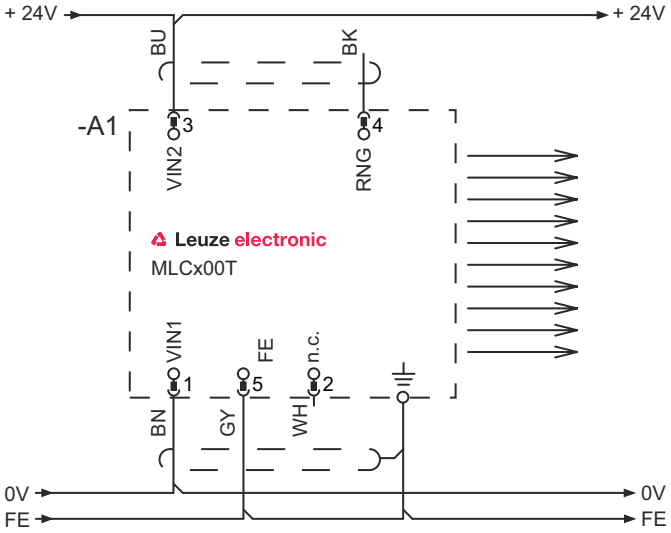

1 VIN1 = 0 V
3 VIN2 = +24 V
4 RNG = 0 V or open

Transmission channel C2, OSSDs activated on the receiver

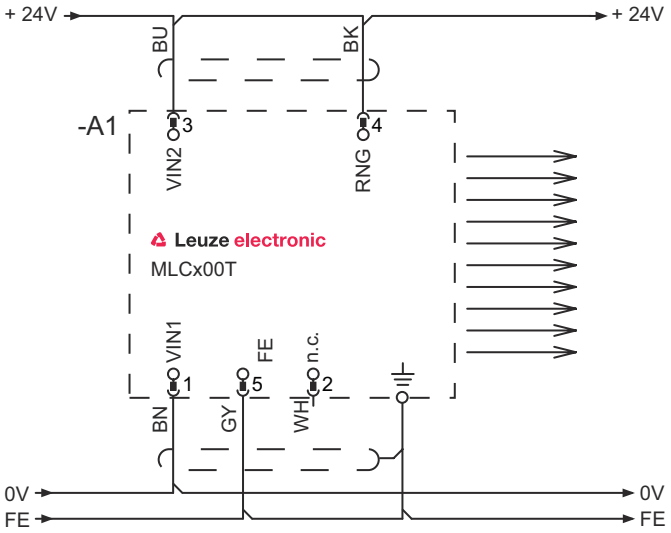

1 VIN1 = 0 V
3 VIN2 = +24 V
4 RNG = +24 V

Operation and display

LED	Display	Meaning
1	Off	Device switched off
	Red, continuous light	Device error
	Green, continuous light	Normal operation
2	Green, flashing, 10 s long after switching on	Test input activated
	Off	Transmission channel C1
	Green, continuous light	Transmission channel C2

Suitable receivers

	Part no.	Designation	Article	Description
	68001906	MLC510R90-600	Safety light curtain receiver	Resolution: 90 mm Protective field height: 600 mm Response time: 3 ms Connection: Connector, M12, Metal, 5 -pin Function package: Basic

Part number code

Part designation: **MLCxyy-za-hhhhei-ooo**

MLC	Safety light curtain
x	**Series** 3: MLC 300 5: MLC 500
yy	**Function classes** 00: transmitter 01: transmitter (AIDA) 02: transmitter with test input 10: basic receiver - automatic restart 11: basic receiver - automatic restart (AIDA) 20: standard receiver - EDM/RES selectable 30: extended receiver - blanking/muting
z	**Device type** T: transmitter R: receiver
a	**Resolution** 14: 14 mm 20: 20 mm 30: 30 mm 40: 40 mm 90: 90 mm
hhhh	**Protective field height** 150 … 3000: from 150 mm to 3000 mm
e	**Host/Guest (optional)** H: Host MG: Middle Guest G: Guest
i	**Interface (optional)** /A: AS-i
ooo	**Option** /V: high Vibration-proof EX2: explosion protection (zones 2 + 22) SPG: Smart Process Gating

Note

- A list with all available device types can be found on the Leuze website at www.leuze.com.

Notes

Observe intended use!

- The product may only be put into operation by competent persons.
- Only use the product in accordance with its intended use.

Accessories

Connection technology - Connection cables

	Part no.	Designation	Article	Description
	50133860	KD S-M12-5A-P1-050	Connection cable	Connection 1: Connector, M12, Axial, Female, A-coded, 5 -pin Connection 2: Open end Shielded: Yes Cable length: 5,000 mm Sheathing material: PUR

Mounting technology - Swivel mounts

	Part no.	Designation	Article	Description
	429393	BT-2HF	Mounting bracket set	Fastening, at system: Through-hole mounting Mounting bracket, at device: Clampable Type of mounting device: Turning, 360° Material: Metal, Plastic

Alignment aids

	Part no.	Designation	Article	Description
	520101	AC-ALM-M	Alignment aid	Housing material: Plastic

Services

	Part no.	Designation	Article	Description
	S981050	CS40-I-140	Safety inspection "Safety light barriers"	Details: Checking of a safety light barrier application in accordance with current standards and guidelines. Inclusion of the device and machine data in a database, production of a test log per application. Conditions: It must be possible to stop the machine, support provided by customer's employees and access to the machine for Leuze employees must be ensured. Restrictions: Travel costs and accommodation expenses charged separately and according to expenditure.
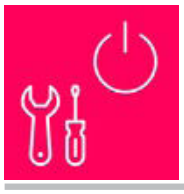	S981046	CS40-S-140	Start-up support	Details: For safety devices including stopping time measurement and initial inspection. Conditions: Devices and connection cables are already mounted, price not including travel costs and, if applicable, accommodation expenses. Restrictions: Max. 2 h., no mechanical (mounting) and electrical (wiring) work performed, no changes (attachments, wiring, programming) to third-party components in the nearby environment.

Note	
	✎ A list with all available accessories can be found on the Leuze website in the Download tab of the article detailed page.