SMART
SENSOR
BUSINESS

Leuze electronic

the sensor people

ERS200

Safety rope switch

EN 2019/07/15 - 607330
We reserve the right to
make technical changes

SAFE IMPLEMENTATION AND OPERATION
Original operating instructions

ПРОМЭЛЕКТРОНИКА / sales@prom-elec.com

© 2019
Leuze electronic GmbH + Co. KG
In der Braike 1
D-73277 Owen/Germany
http://www.leuze.com

1 About this document ... 4
1.1 Other applicable documents ... 4
1.2 Used symbols and signal words ... 5
2 Safety ... 6
2.1 Intended use and foreseeable misuse ... 7
2.1.1 Intended use ... 7
2.1.2 Foreseeable misuse ... 9
2.2 Competent personnel ... 9
2.3 Responsibility for safety ... 9
2.4 Exemption of liability ... 10
3 Device description ... 11
4 Functions ... 17
5 Applications ... 18
6 Mounting ... 19
6.1 Setting the actuator head ... 23
6.2 Mounting the safety rope switch ... 24
6.3 Mounting the rope ... 25
7 Electrical connection ... 30
7.1 Connecting the contact block ... 30
8 Starting up the device ... 33
9 Testing ... 34
9.1 To be performed prior to the initial start-up by competent personnel ... 34
9.2 To be performed periodically by competent personnel ... 34
9.3 To be performed daily by the operating personnel ... 35
10 Cleaning ... 36
11 Disposing ... 37
12 Service and support ... 38
13 Accessories ... 39
14 Technical data ... 41
15 EU/EC Declaration of Conformity ... 44

1 About this document

1.1 Other applicable documents

The information on the ERS200 safety rope switch is divided into two documents. Document "ERS200 application information" contains only the most important safety notices.

- For the safe implementation, testing and operation, download document Safe implementation and operation of the ERS200 from http://www.leuze.com/ers200/ or request it from service.protect@leuze.de or ph. +49 7021 573-123.

Table 1.1: Documents on the ERS200 safety rope switch

Purpose and target group	Title	Source
Detailed information for all users	Safe implementation and operation of the ERS200	On the Internet, download from: http://www.leuze.com/ers200/
Basic information for technicians and operating company	ERS200 application information	Print document part no. 607248 included in the delivery contents of the product

1.2 Used symbols and signal words

Table 1.2: Warning symbols and signal words

⚠	Symbol for dangers
NOTE	Signal word for property damage Indicates dangers that may result in property damage if the measures for danger avoidance are not followed.
CAUTION	Signal word for minor injuries Indicates dangers that may result in minor injury if the measures for danger avoidance are not followed.
WARNING	Signal word for serious injury Indicates dangers that may result in severe or fatal injury if the measures for danger avoidance are not followed.
DANGER	Signal word for life-threatening danger Indicates dangers that will result in severe or fatal injury if the measures for danger avoidance are not followed.

Table 1.3: Other symbols

ℹ	Symbol for tips Text passages with this symbol provide you with further information.
➪	Symbol for action steps Text passages with this symbol instruct you to perform actions.
xxx	Placeholder in the product description for all variants

2 Safety

Before using the safety rope switch, a risk assessment must be performed according to valid standards (e.g. EN ISO 12100-1, EN ISO 13849-1). For mounting, operating and testing, document Safe implementation and operation of the ERS200, application information as well as all applicable national and international standards, regulations, rules and directives must be observed. Observe and print out relevant and supplied documents and distribute to the affected personnel.

The following standards apply for the risk assessment at the protective device prior to using the safety rope switch:

- EN ISO 12100-1, Safety of machinery, risk assessment
- EN ISO 13849-1, Safety-related parts of control systems

The realizable category of the integration in control circuits according to EN ISO 13849-1 is dependent on the used contact block and wiring.

In particular, the following national and international legal regulations apply for the start-up, technical inspections and work with safety switches:

- Machinery Directive 2006/42/EU
- Low voltage directive 2014/35/EU
- Safety regulations
- Accident-prevention regulations and safety rules
- Ordinance on Industrial Safety and Health and employment protection act
- Device Safety Act

Local agencies can also provide safety-relevant information (e.g. occupational safety and health inspectorate, employer's liability insurance association, labor inspectorate, OSHA).

2.1 Intended use and foreseeable misuse

2.1.1 Intended use

- The safety rope switch may only be used after it has been selected in accordance with the respectively applicable instructions and relevant standards, rules and regulations regarding labor protection and safety at work, and after it has been installed on the machine, connected, commissioned, and checked by a **competent person**.
- When selecting the safety rope switch it must be ensured that its safety-related capability meets or exceeds the required Performance Level PL_r ascertained in the risk assessment.
- It must be in perfect condition and inspected regularly.
- The switching process must only be triggered by an actuator approved for this safety rope switch that is connected to the moveable protective device in a non-detachable and tamperproof manner.

WARNING

A running machine can cause severe injuries!

- Make certain that, during all conversions, maintenance work and inspections, the system is securely shut down and protected against being restarted.

WARNING

Severe accidents may result if the E-Stop command device is not used properly!

- Do not use as a replacement for other protective devices.
- Investigate the cause of each release of a safety rope switch along the entire length of the rope.

A safety rope switch **with integrated reset apparatus** enables an EMERGENCY STOP acc. to ISO 13850 and is a **supplementary** protective measure for shutting down in the event of an emergency and must not be used as a replacement for other protective devices. Models **without reset apparatus** are only suitable for the safe switching off of a machine and must **not** be used in EMERGENCY STOP functions.

ERS200 safety rope switches are actuated via a rope. They must be connected so that the switching function is triggered by moving the rope in any direction and the dangerous state is stopped immediately.

Connection conditions:

- rope is easily accessible
- can be actuated at any time while the machine is running
- dangerous state is ended immediately, taking into consideration the appropriate stop category
- danger zone and occupied area along the entire length of the rope are visible from the safety rope switch
- start commands that result in dangerous states are only possible if the Reset button is manually unlocked (for models with integrated reset apparatus)
- can be easily accessed by qualified personnel for testing and replacement

Furthermore, the ERS200 safety rope switch must not be used under the following conditions:

- rapidly changing ambient temperature (leads to condensation)
- in the event of strong physical shocks
- in explosive or easily flammable atmospheres
- the mounting locations for safety rope switches, stud bolts and deflection rollers are not sufficiently stable
- the safety of multiple persons is dependent on the function of this safety switch (e.g. nuclear power plants, trains, aircraft, motor vehicles, incinerators, medical devices)

Handling the safety rope switch:

- Observe mounting conditions (see chapter 6 "Mounting").
- The maximum permissible rope length must not be exceeded.
- Observe the permissible environmental conditions for storage and operation (see chapter 14 "Technical data").
- Immediately replace damaged safety rope switches according to these instructions.
- Use cable gland, insulation materials and connecting wires of the appropriate degree of protection.
- Protect safety rope switches from strong physical shocks and vibrations.
- Protect the safety rope switch from penetrating foreign bodies (e.g. shavings, sand and blasting agent).
- Before performing painting work, cover all moving parts, indicators and the name plate.
- Immediately clean any contamination from the safety rope switch and deflection rollers that impacts the function according to these instructions.
- Use only suitable original accessories (see chapter 13 "Accessories").

- Make no structural changes to the safety rope switch.
- The safety rope switch must be exchanged after a maximum of 20 years.

2.1.2 Foreseeable misuse

Any use other than that defined under the "approved purpose" or which goes beyond that use of the safety rope switch is considered improper use!

E.g. - using without non-detachably mounted actuator

- looping into the safety circuit parts that are not relevant to safety
- using the switch as a limit stop

2.2 Competent personnel

Prerequisites for competent personnel:

- suitable technical training
- knows the rules and regulations for labor protection, safety at work and safety technology and can assess the safety of the machine
- is familiar with the operating instructions for the safety rope switch and the machine
- was instructed by the responsible individuals on the mounting and operation of the machine and of the safety rope switch

2.3 Responsibility for safety

Manufacturer and operating company must ensure that the machine and implemented safety rope switch function properly and that all affected persons are adequately informed and trained.

The type and content of all imparted information must not lead to unsafe actions by users.

The manufacturer of the machine is responsible for:

- Safe machine construction
- Safe implementation of the safety rope switch as:
  - E-Stop command device (models with reset apparatus)
  - Safety switches (models without reset apparatus)
- Imparting all relevant information to the operating company
- Adhering to all regulations and directives for the safe commissioning of the machine

The operating company is responsible for:

- Instructing the operating personnel
- Maintaining the safe operation of the machine
- Adhering to all regulations and directives for labor protection and safety at work
- Regular testing by competent personnel

2.4 Exemption of liability

Leuze electronic GmbH & Co. KG is not liable in the following cases:

- Safety rope switch is not used as intended
- Safety notices are not adhered to
- Mounting and electrical connection are not properly performed
- Reasonably foreseeable misuse is not taken into account

3 Device description

The ERS200 safety rope switches are safety devices that are typically used in machines and systems with long length. They enable the safe shutdown of dangerous movements (models without reset) or the E-Stop command (models with reset) from any position and any time the rope is pulled. The devices are equipped with a self-monitoring function that signals possible sagging or rope breakage by opening the electrical contacts. The housing is made of metal, and the actuator head is made of glass-fiber-reinforced, non-combustible plastic or metal. An adjustment indicator aids in correctly setting the rope tension. The actuator head, which can be turned in 90° increments, ensures that the Reset button – the position of which is likewise displayed by means of an indicator – is easily accessible. Deflection rollers can be used to adapt the course of the rope to many different danger zones. Various contact sets, housing sizes and rope exit directions satisfy a wide range of requirements.

Attention: For the realization of E-Stop functions in accordance with ISO 13850, only devices with integrated reset apparatus may be used. These feature a mechanism that holds the contacts in the open position until the operator performs a manual reset.

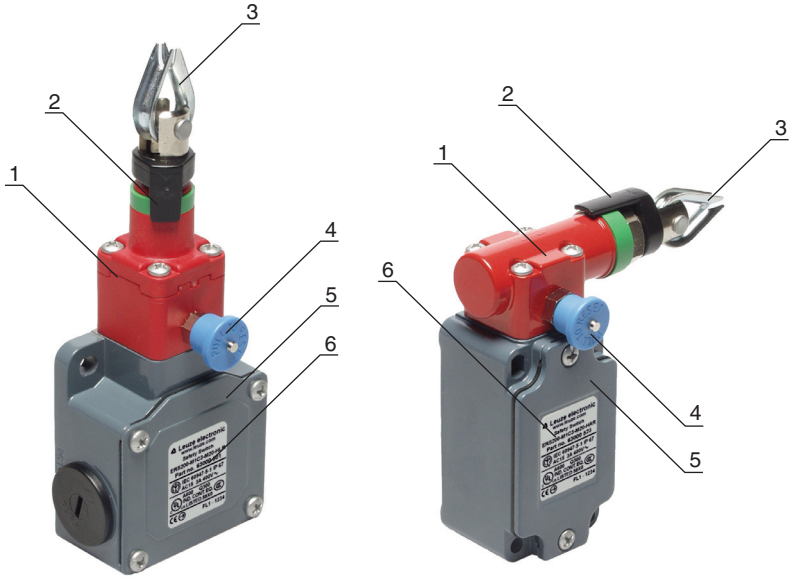

1 Actuator head
2 Adjustment indicator
3 Fastening for rope
4 Reset button
5 Housing cover
6 Name plate (connection data, production code and year of manufacture)

Table 3.1: ERS200 safety rope switch

Article	Part no.	Description
ERS200-M0C3-M20-HLR	63000500	1NC+1NO, 3 cable entries, exit lengthwise
ERS200-M1C3-M20-HLR	63000501	2NC, 3 cable entries, exit lengthwise
ERS200-M4C3-M20-HLR	63000502	2NC+1NO, 3 cable entries, exit lengthwise
ERS200-M4C1-M20-HLR	63000503	2NC+1NO, 1 cable entry, exit lengthwise
ERS200-M4C1-M12-HLR	63000504	2NC+1NO, 1 cable entry, exit lengthwise, M12 connector
ERS200-M4C1-M20-HLR79	63000505	2NC+1NO, 1 cable entry, exit lengthwise, without reset

Article	Part no.	Description
ERS200-M4C3-M20-HAR	63000520	2NC+1NO, 3 cable entries, exit to the right
ERS200-M0C3-M20-HAR	63000522	1NC+1NO, 3 cable entries, exit to the right
ERS200-M1C1-M20-HAR	63000523	2NC, 1 cable entry, exit to the right
ERS200-M4C3-M20-HAL	63000521	2NC+1NO, 3 cable entries, exit to the left
ERS200-M0C3-M20-HAL	63000524	1NC+1NO, 3 cable entries, exit to the left
ERS200-M1C1-M20-HAL	63000525	2NC, 1 cable entry, exit to the left

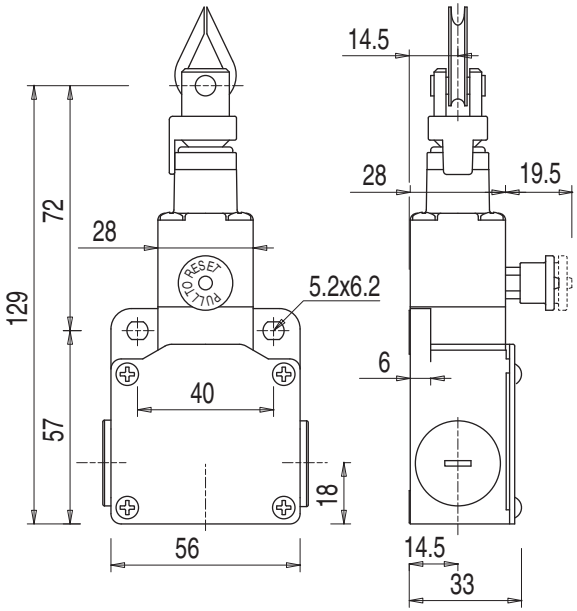

Figure 3.1: Dimensions ERS-MxC3x-HLR in mm

ПРОМЭЛЕКТРОНИКА / sales@prom-elec.com

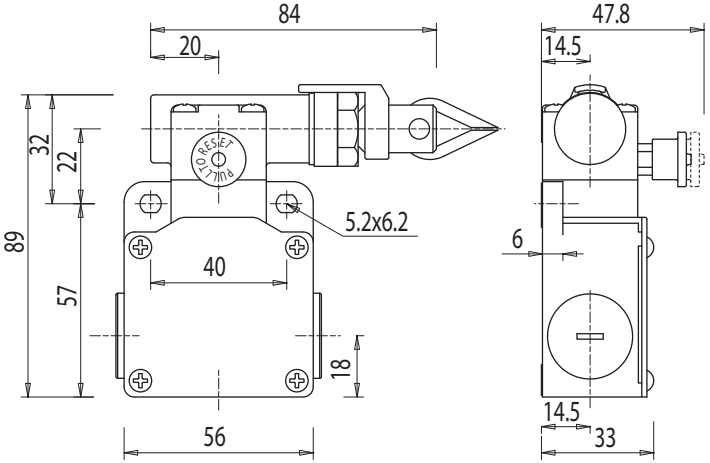

Figure 3.2: Dimensions ERS200-MxC3x-HAR in mm

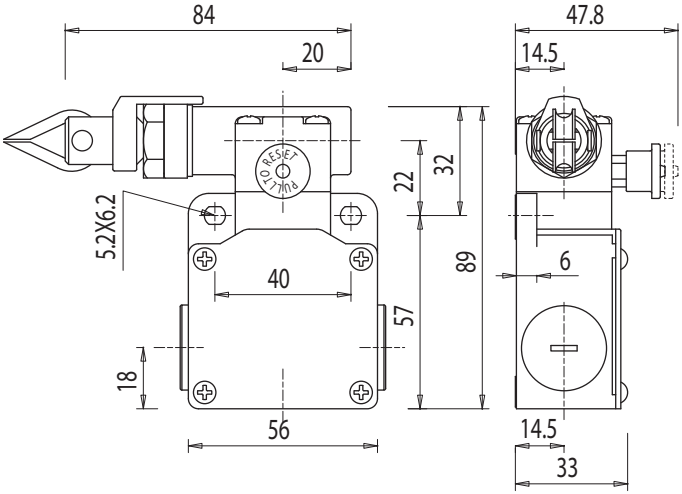

Figure 3.3: Dimensions ERS200-MxC3x-HAL in mm

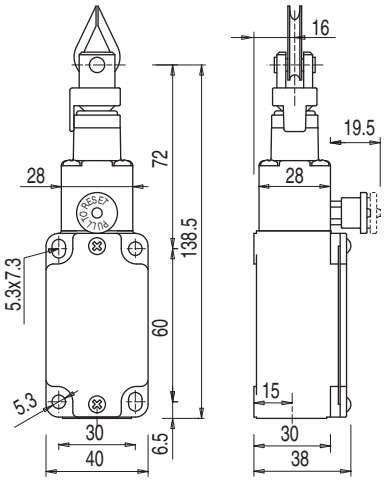

Figure 3.4: Dimensions ERS200-MxC1x-HLR in mm

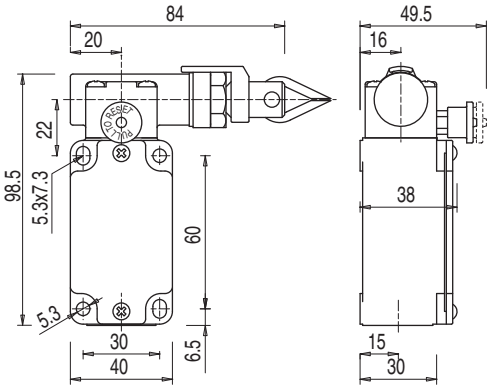

Figure 3.5: Dimensions ERS200-MxC1x-HAR in mm

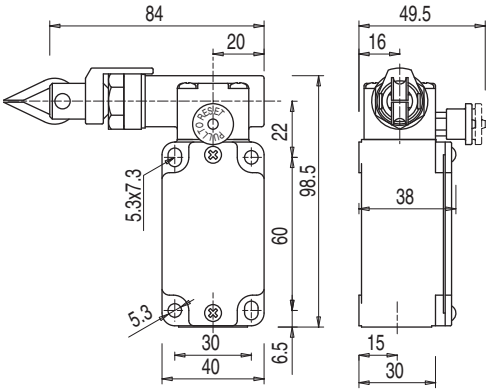

Figure 3.6: Dimensions ERS200-MxC1x-HAL in mm

4 Functions

If the rope is pulled or if it breaks, a stop command is triggered. The contact block remains in the stop state until the rope tension is restored to the correct value (see adjustment indicator) and the Reset button is manually pulled out to the notch position.

For models without Reset button, the contact block returns to the initial state as soon as the rope tension is restored to the correct value.

5 Applications

The safety rope switch **with Reset button** is suitable as a device for position-independent E-Stop command output (in accordance with ISO 13850) at extended points of operation or danger zones.

The safety rope switch **without Reset button** is suitable as a device for position-independent stop command output at extended points of operation or danger zones.

6 Mounting

WARNING

Severe accidents may result if the safety rope switch is not mounted properly!

The protective function of the safety rope switch is only ensured if appropriately and professionally mounted for the respective, intended area of application.

- Mounting may only be performed by competent personnel.
- Observe standards, regulations and environmental conditions.
- Protect housing from penetrating soiling.
- Test to ensure proper function.

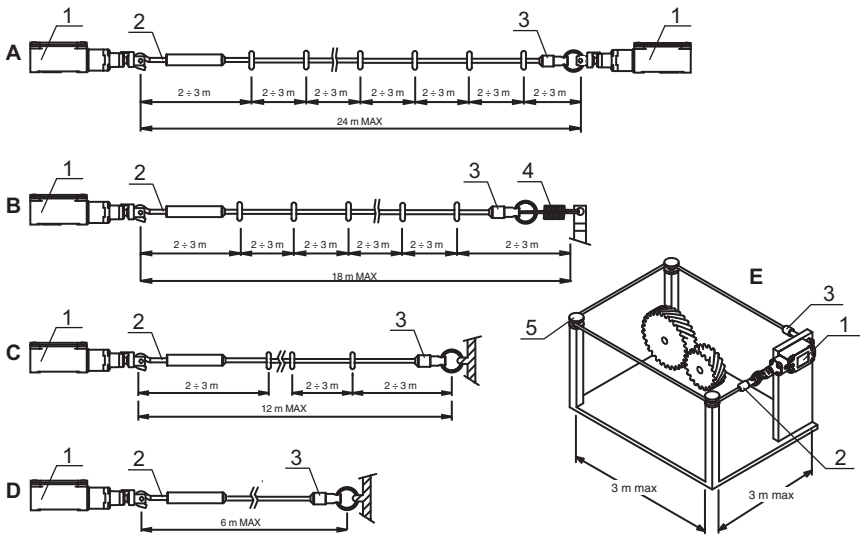

1	Safety rope switch (ERS200-Mxxx-HLRxx)
2	Rope clamp with hook and lock nut, clamping sleeve
3	Rope clamp with eyelet and clamping sleeve
4	Safety spiral spring (AC-SL-ERS)
5	Deflection roller (AC-AP-ERS)

Figure 6.1: Mounting example A–E

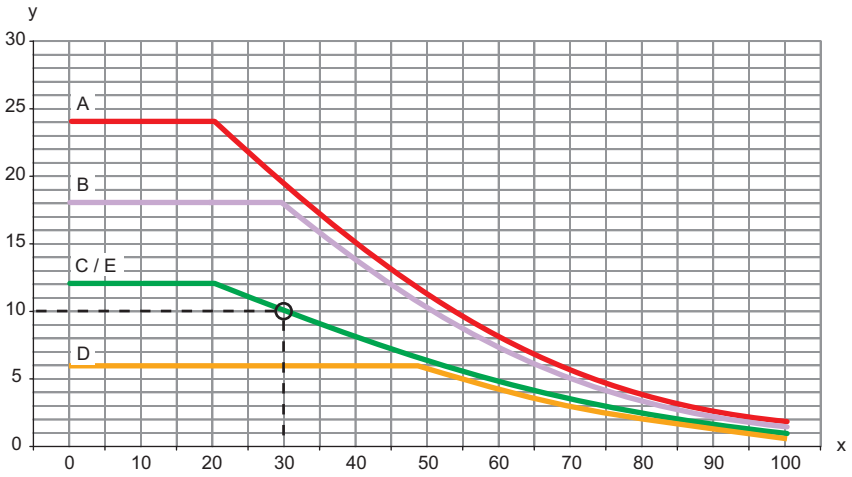

X-axis Temperature fluctuation in °C
Y-axis Maximum rope length in m

Figure 6.2: Maximum rope length as a function of the temperature fluctuation for mounting examples A–E

Example: If mounting example C is subject to temperature fluctuations of 30°C, the maximum length of the rope is 10 m.

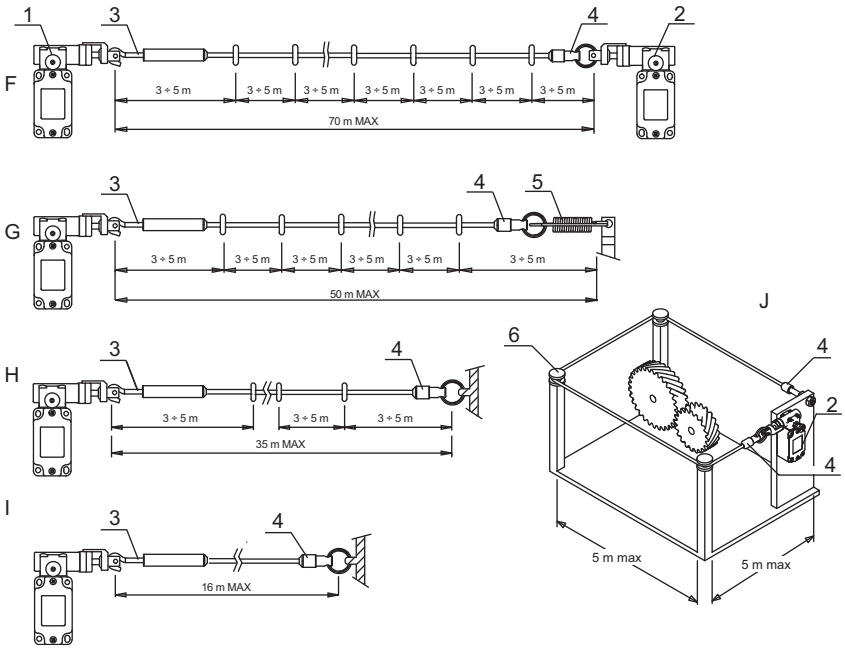

1	Safety rope switch (ERS200-Mxxx-HAR)
2	Safety rope switch (ERS200-Mxxx-HAL)
3	Rope clamp with hook and lock nut, clamping sleeve
4	Rope clamp with eyelet and clamping sleeve
5	Safety spiral spring (AC-SL-ERS)
6	Deflection roller (AC-AP-ERS)

Figure 6.3: Mounting example F–J

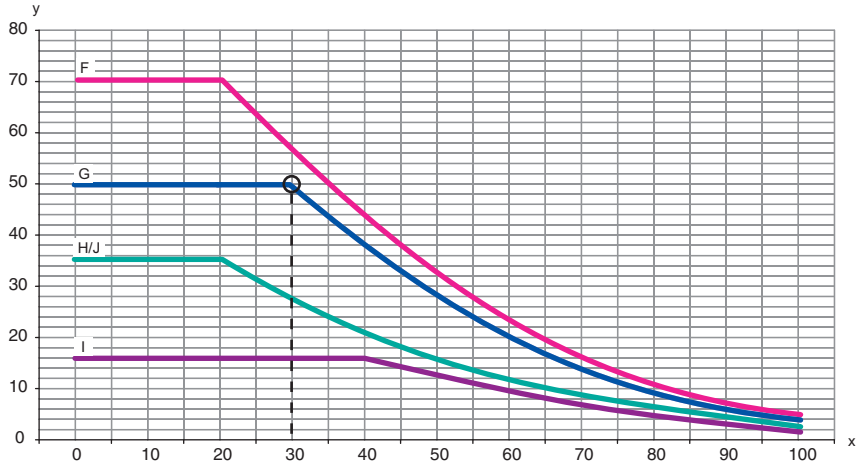

X-axis Temperature fluctuation in °C
Y-axis Maximum rope length in m

Figure 6.4: Maximum rope length as a function of the temperature fluctuation for mounting examples F–J

Example: If mounting example G is subject to temperature fluctuations of 30°C, the maximum length of the rope is 50 m.

For applications with elevated risk, a safety rope switch should be mounted at each end of the rope. In this case, the changed rope length and the two-channel integration in the safety circuit must be taken into account.

6.1 Setting the actuator head

- Unscrew the 4 screws on the actuator head.

- Turn the actuator head in the appropriate actuation direction for the Reset button.
- Tighten the 4 screws on the actuator head with 0.7–0.9 Nm.

6.2 Mounting the safety rope switch

Prerequisites for mounting:

- Actuator head is adjusted

Select the mounting locations so that the following conditions are satisfied:

- maximum rope length is not exceeded (see figure 6.2)
- safety rope switch is not exposed to any physical shocks or vibrations
- rope can be easily accessed by operating personnel in the entire operating area
- pulling the rope in any direction triggers an emergency stop/stop
- the occupied area is visible along the entire length of the rope from the location of the safety rope switch
- rope is aligned with the axis of the safety rope switch head (if applicable, to the first deflection roller)

Align the safety rope switch head with the direction of the rope.

Position washers and screw down safety rope switch with 2–3 Nm.

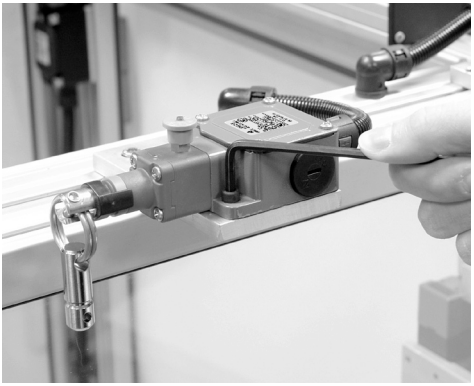

Secure stud bolts or mounting bracket for rope clamp with eyelet.

If necessary, mount deflection rollers.

If necessary, mount eyebolts as rope guide at intervals of 2–3 m.

6.3 Mounting the rope

WARNING

Severe accidents may result if the rope is not mounted properly!

The rope must not chafe or catch.

- Use deflection rollers.
- Observe the maximum lengths, which are dependent on temperature fluctuations (see chapter 6 "Mounting") and (see chapter 14 "Technical data").
- Pay attention to rope tension, use safety spiral springs if necessary (see chapter 13 "Accessories").

Prerequisites for proper function:

- rope and rope clamps are appropriate for the safety rope switch
  proper function is ensured only with original accessories (see chapter 13 "Accessories")
- safety rope switch, rope clamps and deflection rollers are mounted
- the rope is sufficiently long (take deflection rollers into account)
- the rope can be optimally positioned for ergonomics

Before the length and tension of the rope can be properly adjusted, the end of the rope opposite the safety rope switch must first be secured.

- Push the rope cover for the rope clamp onto the rope.
- Guide the end of the rope into the rope clamp.

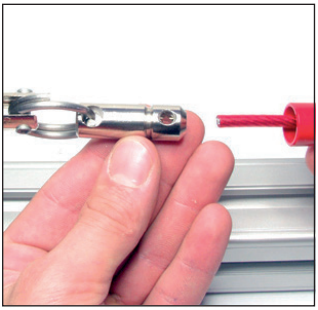

- Screw down the rope in the rope clamp.

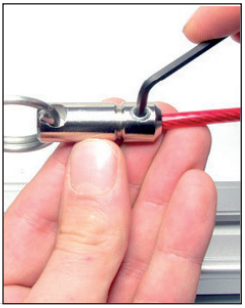

- Push the rope cover over the rope clamp.

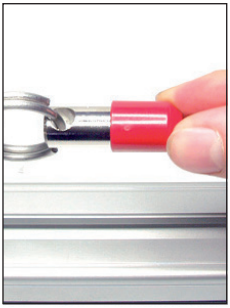

- Guide the other end of the rope (over deflection rollers and through eyebolts if applicable) up to the adjustable rope clamp with hook on the safety rope switch.
- Push the rope cover for the rope clamp onto the rope.
- Guide the end of the rope into the rope clamp on the safety rope switch.

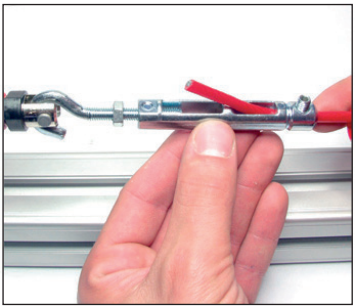

↳ Tighten the rope so that it does not sag and screw down in the rope clamp.

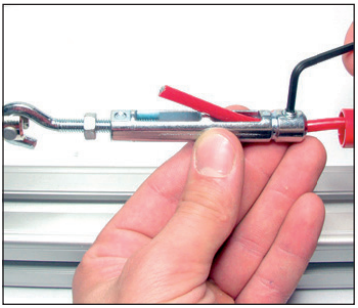

↳ Turn the hook to pretension the rope.

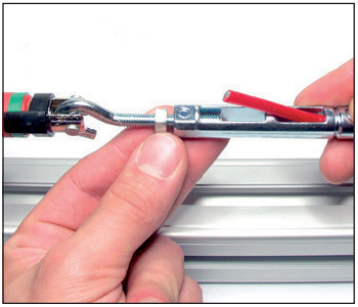

↳ Tension the rope so that the adjustment indicator (1) is in the center of the green ring (2).

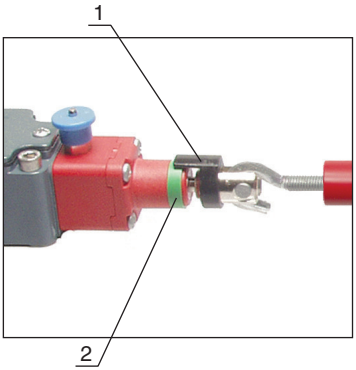

↳ Secure the hook and rope clamp with a lock nut.

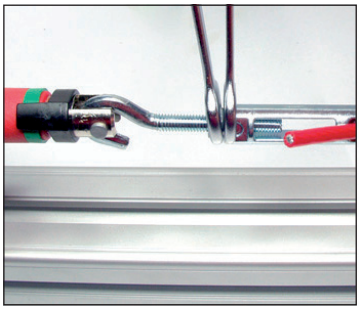

↳ If necessary, trim any excess rope.

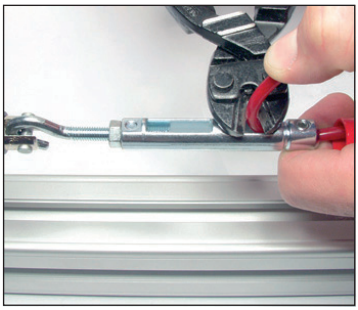

↳ Push the rope cover over the adjustable rope clamp with hook.

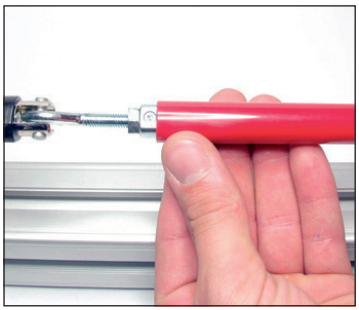

- Pull out the Reset button (3), thereby closing the safety contacts in the safety rope switch.

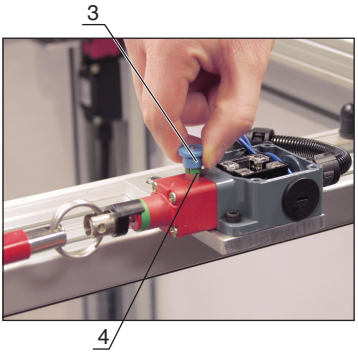

If the rope is correctly tensioned, the Reset button (3) locks into place and a green ring (4) remains visible.

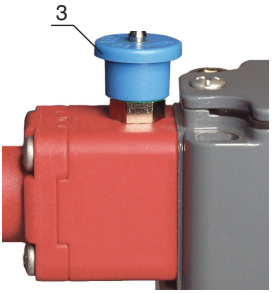

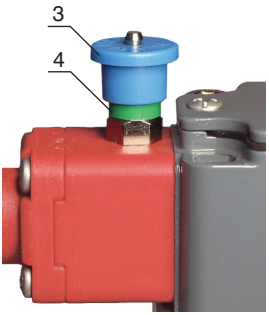

7 Electrical connection

WARNING

Serious accidents may result if the electrical connection is faulty!

↳ Electrical connection may only be performed by competent personnel.

7.1 Connecting the contact block

Prerequisites:

- Temperature stability of the cable insulation material must be greater than the maximum temperature of the housing (see chapter 14 "Technical data")
- Cable gland with appropriate degree of protection
- Maximum current load is observed (see chapter 14 "Technical data")

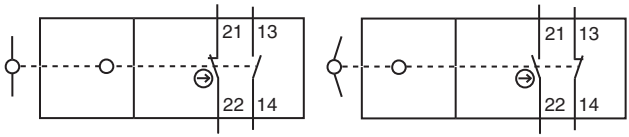

Figure 7.1: Contact block 1NC + 1NO (ERS200-M0xxx)

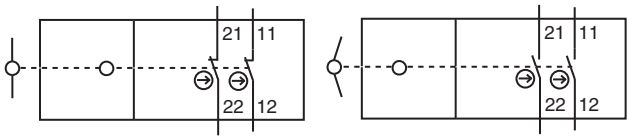

Figure 7.2: Contact block 2NC (ERS200-M1xxx)

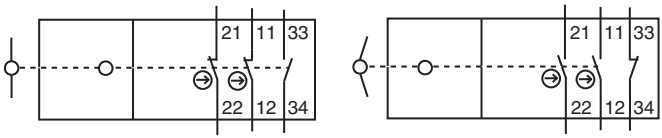

Figure 7.3: Contact block 2NC + 1NO (ERS200-M4xxx)

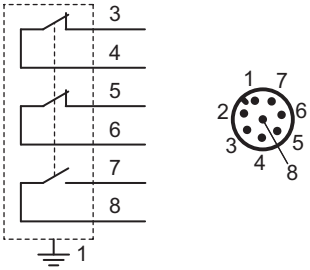

Figure 7.4: Assignment of the 8-pin M12 connector (ERS200-xxx-M12-xxx)

DANGER

Risk of death by electric shock!

- Interrupt the voltage supply to the safety rope switch.

- Unscrew the housing cover.
- Connect the contact block according to the application-specific circuit diagram.

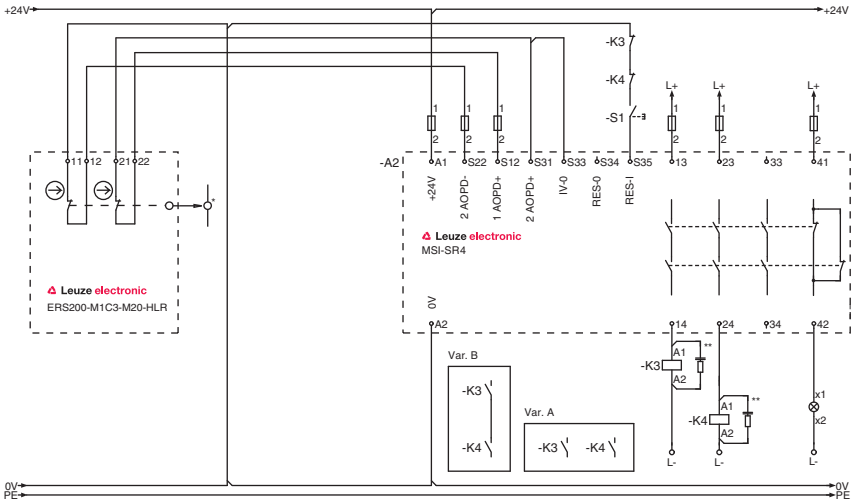

* Rope

** Spark extinction circuit, suitable spark extinction provided

Figure 7.5: ERS200-M1C3-M20-HLR connection example

- Tighten cable terminal screws with 0.6–0.8 Nm.

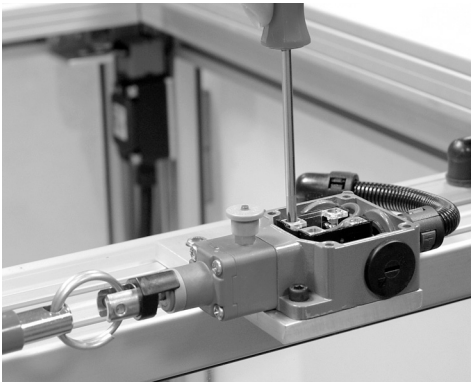

- Tighten the housing cover with 0.8–1.2 Nm.

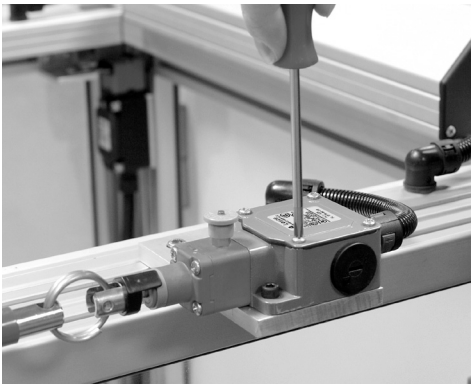

8 Starting up the device

Prerequisites:

- Safety rope switch is mounted and connected according to these instructions
- Operating personnel have been trained in the correct use

↳ Check the function of the safety rope switch (see chapter 9 "Testing").

The safety rope switch is then ready for use.

9 Testing

ERS200 safety rope switches are maintenance-free. Nevertheless, they must be replaced after maximum 1,000,000 switching cycles; accessory parts that are subject to wear must also be replaced (e.g., safety spiral springs).

- For the testing intervals, observe the nationally applicable regulations.
- Document all tests in a comprehensible manner.

9.1 To be performed prior to the initial start-up by competent personnel

- Check whether the safety rope switch is operated according to its specified environmental conditions (see chapter 14 "Technical data").
- Test to ensure proper mechanical and electrical function (see chapter 9.2 "To be performed periodically by competent personnel").

9.2 To be performed periodically by competent personnel

Mechanical function

- Switch off the machine.
- Check that all components are securely fastened.
- Test the cable entry for leaks.
- Check for damage, deposits and wear.
- Make certain that the rope does not chafe or catch (if applicable, check deflection rollers for ease of motion).
- Make certain that the rope is not covered (obstructed, blocked, etc.) and is easily accessible along the entire length.
- Check whether the rope is correctly tensioned (green ring on the adjustment indicator).
- Check the switching function.

Electrical function

WARNING

Severe accidents may result if tests are not performed properly!

- Make certain that there are no persons in the danger zone.

- Pull out the Reset button (if present).
- Switch on the machine.

- Pull the rope several times in all directions and at multiple points along the entire length of the rope. Make certain that the emergency stop/stop is triggered every time.
- Switch off the machine.
- Actuate the safety rope switch.
- Make certain that the machine cannot be switched back on unless the Reset button is pulled out (only for models with Reset button).
- Check whether the stopping time of the machine is sufficiently short (according to risk assessment and valid standards).

9.3 To be performed daily by the operating personnel

WARNING

Severe accidents may result if tests are not performed properly!

- Make certain that there are no persons in the danger zone.

- Check for damage or tampering.
- Test whether the machine stops when the rope is pulled.

10 Cleaning

There must be no soiling (e.g., shavings and dust) present, especially at the actuator head and the Reset button of the safety rope switch.

Prerequisites for cleaning:

- Machine is switched off
- Voltage supply to the safety rope switch is interrupted

↳ Periodically clean the safety rope switch (e.g. with vacuum cleaner).

11 Disposing

- The nationally valid regulations for electro-mechanical components are to be observed when disposing.

12 Service and support

24-hour on-call service at:
+49 7021 573-0

Service hotline:
+49 7021 573-123

E-mail:
service.protect@leuze.de

Return address for repairs:
Service center
Leuze electronic GmbH + Co. KG
In der Braike 1
D-73277 Owen / Germany:

13 Accessories

Table 13.1: Accessories for the ERS200 safety rope switch

Article	Part no.	Description
AC-KT10-ERS	63000790	Accessory set; 10 m steel rope and rope clamps
AC-KT20-ERS	63000791	Accessory set; 20 m steel rope and rope clamps
AC-SL-ERS	63000792	Safety spiral spring (actuation direction along the longitudinal axis)
AC-AP-ERS	63000793	Corner pulley
AC-STOP-ERS	63000794	<STOP> label element (rope max. 5 mm Ø)
AC-STRO-35-ERS	63000795	Steel rope, 35 m
AC-STRO-100-ERS	63000796	Steel rope, 100 m
AC-SBO-ERS	63000797	Stud bolts, adjustable
AC-ENCLF-ERS	63000798	End ring with fixing
AC-SA-ERS	63000799	Safety spiral spring for -HAL and -HAR versions
AC-P-ERS	63000800	Deflection roller, straight version
KD S-M12-5A-P1-050	50133860	PUR, 5-pin, 5 m, shielded, M12 coupling, straight, prefabricated on one end
KD S-M12-5A-P1-100	50133861	PUR, 5-pin, 10 m, shielded, M12 coupling, straight, prefabricated on one end
KD S-M12-5A-P1-150	50137014	PUR, 5-pin, 15 m, shielded, M12 coupling, straight, prefabricated on one end
KD S-M12-5A-P1-250	50136146	PUR, 5-pin, 25 m, shielded, M12 coupling, straight, prefabricated on one end
KD S-M12-8A-P1-050	50135128	PUR, 8-pin, 5 m, shielded, M12 coupling, straight, prefabricated on one end

Article	Part no.	Description
KD S-M12-8A-P1-100	50135129	PUR, 8-pin, 10 m, shielded, M12 coupling, straight, prefabricated on one end
KD S-M12-8A-P1-150	50135130	PUR, 8-pin, 15 m, shielded, M12 coupling, straight, prefabricated on one end
KD S-M12-8A-P1-250	50135131	PUR, 8-pin, 25 m, shielded, M12 coupling, straight, prefabricated on one end

14 Technical data

Table 14.1: General information

Switch type	Safety rope switch
Actuator	Rope
Actuation directions	ERS200-Mxxx-HLR: along longitudinal axis ERS200-Mxxx-HAR: to the right ERS200-Mxxx-HAL: to the left
Installation position	ERS200-Mxxx-HLR: along rope axis ERS200-Mxxx-HAR: along rope axis to the right ERS200-Mxxx-HAL: along rope axis to the left
Actuation speed	Min. 1 mm/s, max. 0.5 m/s
Actuation force (pull-out)	ERS200-Mxxx-HLR: 83 N ERS200-Mxxx-HAR: 235 N ERS200-Mxxx-HAL: 235 N
Actuation force (slacken)	ERS200-Mxxx-HLR: 63 N ERS200-Mxxx-HAR: 147 N ERS200-Mxxx-HAL: 147 N
Actuation force (pull-out) with forced separation	ERS200-Mxxx-HLR: 90 N ERS200-Mxxx-HAR: 250 N ERS200-Mxxx-HAL: 250 N
Actuating path with forced separation	ERS200-Mxxx-HLR: 8 mm ERS200-Mxxx-HAR: 14 mm ERS200-Mxxx-HAL: 14 mm
Mechanical life time in accordance with IEC 60947-5-1	1,000,000 switching cycles
Actuation frequency in accordance with IEC 60947-5-1	Max. 1 per 6 seconds
Mission time (T_M) in accordance with EN ISO 13849-1	20 years

Number of cycles before dangerous failure (B10d) according to EN 61810-2	2.000.000
Usage category in accordance with EN 60947-5-1 Maximum load when using 5-pin cables: Maximum load when using 8-pin cables:	AC 15 (Ue / Ie): 250 V / 6 A 400 V / 4 A 500 V / 1 A DC 13 (Ue / Ie): 24 V / 6 A 125 V / 1,1 A 250 V / 0,4 A 24 V / 4 A (see chapter 13 "Accessories") 24 V / 2 A (see chapter 13 "Accessories")
Dimensions (dimensional drawings)	see chapter 3 "Device description"

Table 14.2: Safety

Degree of protection	IP 67
Contact allocation	ERS200-M0xxx: 1NC + 1NO ERS200-M1xxx: 2NC ERS200-M4xxx: 2NC + 1NO
Contact material	Silver alloy
Switching principle	Slow-action contact
Contact opening	Force-fit
Rated insulation voltage	500 V AC, 600 V DC
Conventional thermal current	Max. 10 A
Short-circuit protection in accordance with IEC 60269-1	10 A, 500 V, type aM

Table 14.3: Housing

Housing material	Metal
Head material	ERS200-xxx-HLR: plastic ERS200-xxx-HAR: metal ERS200-xxx-HAL: metal

Table 14.4: Connection

Number of cable entries	3
Type of cable entry	M20 x 1.5
Conductor cross-section (wire)	1 x 0.5 mm^2 to 2 x 2.5 mm^2

Table 14.5: Environmental data

Ambient temperature, operation	–25 ... +80 °C
Rope length at 20 °C temperature difference	ERS200-Mxxx-HLR: max. 24 m ERS200-Mxxx-HAR: max. 70 m ERS200-Mxxx-HAL: max. 70 m
Rope length between two deflection rollers or, alternatively, rope eyelets	ERS200-Mxxx-HLR: max. 3 m ERS200-Mxxx-HAR: max. 5 m ERS200-Mxxx-HAL: max. 5 m
Dirt levels, external, in accordance with EN 60947-1	3

These tables do not apply in combination with additional M12 plug or connecting cable. except where these components are explicitly mentioned.

15 EU/EC Declaration of Conformity

SMART
SENSOR
BUSINESS

Leuze electronic
the sensor people

EU-/EG-KONFORMITÄTS-ERKLÄRUNG	EU/EC DECLARATION OF CONFORMITY	DECLARATION UE/CE DE CONFORMITE
Hersteller:	Manufacturer:	Constructeur:
	Leuze electronic GmbH + Co. KG In der Braike 1, PO Box 1111 73277 Owen, Germany	
Produktbeschreibung:	Description of product:	Description de produit:
NOT-HALT Seilzugschalter ERS200 Seriennummer siehe Typschild	**E-STOP rope switch ERS200 Serial no. see name plates**	**Interrupteur d'arrêt d'urgence à câble ERS200 N° série voir plaques signalétiques**
Die alleinige Verantwortung für die Ausstellung dieser Konformitätserklärung trägt der Hersteller.	This declaration of conformity is issued under the sole responsibility of the manufacturer.	La présente déclaration de conformité est établie sous la seule responsabilité du fabricant.
Der oben beschriebene Gegenstand der Erklärung erfüllt die einschlägigen Harmonisierungsrechts-vorschriften der Union:	The object of the declaration described above is in conformity with the relevant Union harmonisation legislation:	L'objet de la déclaration décrit ci-dessus est conforme à la législation d'harmonisation de l'Union applicable:
Angewandte EU-/EG-Richtlinie(n):	Applied EU/EC Directive(s):	Directive(s) UE/CE appliquées:
2006/42/EG 2014/30/EU 2011/65/EU	**2006/42/EC 2014/30/EU 2011/65/EU**	**2006/42/CE 2014/30/UE 2011/65/UE**

Angewandte harmonisierte Normen / Applied harmonized standards / Normes harmonisées appliquées:

EN ISO 13849-1:2015 EN ISO 13850:2015	**EN 62061:2005+A2:2015 EN 60947-5-5:1997+A1:2005+A11:2013**	**EN 60947-5-1:2017**

Angewandte technische Spezifikationen / Applied technical specifications / Spécifications techniques appliquées:

Dokumentationsbevollmächtigter ist der genannte Hersteller, Kontakt: quality@leuze.de.
Authorized for documentation is the stated manufacturer, contact: quality@leuze.de.
Autorisé pour documentation est le constructeur déclaré, contact: quality@leuze.de

2014/30/EU veröffentlicht: 29.03.2014, EU-Amtsblatt Nr. L 96/79-106; 2014/30/EU published: 29.03.2014, EU-Journal No. L 96/79-106; 2014/30/UE publié: Journal EU n° L 96/79-106

19.03.2018
Datum / Date / Date

Ulrich Balbach,
Geschäftsführer / Managing Director / Gérant

i.A. Fabien Zelenda
Quality Management Central Functions

Leuze electronic GmbH + Co. KG
In der Braike 1
D-73277 Owen
Telefon +49 (0) 7021 573-0
Telefax +49 (0) 7021 573-199
info@leuze.de
www.leuze.com

Leuze electronic GmbH + Co. KG, Sitz Owen, Registergericht Stuttgart, HRA 230712
Persönlich haftende Gesellschafterin Leuze electronic Geschäftsführungs-GmbH,
Sitz Owen, Registergericht Stuttgart, HRB 230550
Geschäftsführer: Ulrich Balbach
USt.-IdNr. DE 145912521 | Zollnummer 2554232

Es gelten ausschließlich unsere aktuellen Verkaufs- und Lieferbedingungen
Only our current Terms and Conditions of Sale and Delivery shall apply

LEO-ZQM-148-07-FO

SMART
SENSOR
BUSINESS

Leuze electronic
the sensor people

EU-/EG-KONFORMITÄTS-ERKLÄRUNG	EU/EC DECLARATION OF CONFORMITY	DECLARATION UE/CE DE CONFORMITE
Hersteller:	Manufacturer:	Constructeur:
	Leuze electronic GmbH + Co. KG In der Braike 1, PO Box 1111 73277 Owen, Germany	
Produktbeschreibung:	Description of product:	Description de produit:
Sicherheits-Seilzugschalter ERS200-xxxx-xxx-xxx79 Seriennummer siehe Typschild	**Safety rope switch ERS200-xxxx-xxx-xxx79 Serial no. see name plates**	**Interrupteur de sécurita à câble ERS200-xxxx-xxx-xxx79 N° série voir plaques signalétiques**
Die alleinige Verantwortung für die Ausstellung dieser Konformitätserklärung trägt der Hersteller.	This declaration of conformity is issued under the sole responsibility of the manufacturer.	La présente déclaration de conformité est établie sous la seule responsabilité du fabricant.
Der oben beschriebene Gegenstand der Erklärung erfüllt die einschlägigen Harmonisierungsrechts-vorschriften der Union:	The object of the declaration described above is in conformity with the relevant Union harmonisation legislation:	L'objet de la déclaration décrit ci-dessus est conforme à la législation d'harmonisation de l'Union applicable:
Angewandte EU-/EG-Richtlinie(n):	Applied EU/EC Directive(s):	Directive(s) UE/CE appliquées:
2014/35/EU 2014/30/EU 2011/65/EU	**2014/35/EU 2014/30/EU 2011/65/EU**	**2014/35/UE 2014/30/UE 2011/65/UE**

Angewandte harmonisierte Normen / Applied harmonized standards / Normes harmonisées appliquées:

EN 60947-5-1:2017 **EN 50581:2012**

Angewandte technische Spezifikationen / Applied technical specifications / Spécifications techniques appliquées:

2014/30/EU veröffentlicht: 29.03.2014, EU-Amtsblatt Nr. L 96/79-106; 2014/30/EU published: 29.03.2014, EU-Journal No. L 96/79-106; 2014/30/UE publié: Journal EU n° L 96/79-106

2014/35/EU veröffentlicht: 29.03.2014, EU-Amtsblatt Nr. L 96/357-374; 2014/35/EU published: 29.03.2014, EU-Journal No. L 96/357-374; 2014/35/UE publié: Journal EU n° L 96/357-374

10.07.2019
Datum / Date / Date

i.V.
Alexander Hess
Director Product Center Safety

i.A.
Alexander Mielchen
Product Manager Safety

Leuze electronic GmbH + Co. KG
In der Braike 1
D-73277 Owen
Telefon +49 (0) 7021 573-0
Telefax +49 (0) 7021 573-199
info@leuze.de
www.leuze.com

Leuze electronic GmbH + Co. KG, Sitz Owen, Registergericht Stuttgart, HRA 230712
Persönlich haftende Gesellschafterin Leuze electronic Geschäftsführungs-GmbH, Sitz Owen, Registergericht Stuttgart, HRB 230550
Geschäftsführer: Ulrich Balbach
USt.-IdNr. DE 145912521 | Zollnummer 2554232
Es gelten ausschließlich unsere aktuellen Verkaufs- und Lieferbedingungen
Only our current Terms and Conditions of Sale and Delivery shall apply

LEO-ZQM-148-07-FO