Leuze electronic

the sensor people

SMART
SENSOR
BUSINESS

IPS 208i

Camera-based positioning sensor

EN 2017/11 - 50137619
We reserve the right to
make technical changes

Original operating instructions

ПРОМЭЛЕКТРОНИКА / sales@prom-elec.com

© 2017
Leuze electronic GmbH & Co. KG
In der Braike 1
D-73277 Owen / Germany
Phone: +49 7021 573-0
Fax: +49 7021 573-199
http://www.leuze.com
info@leuze.com

1 About this document ... 6
1.1 Used symbols and signal words ... 6
2 Safety ... 8
2.1 Intended use ... 8
2.2 Foreseeable misuse ... 8
2.3 Competent persons ... 9
2.4 Disclaimer ... 9
3 Device description ... 10
3.1 Device overview ... 10
3.1.1 IPS 200i positioning sensor ... 10
3.1.2 Performance characteristics ... 11
3.1.3 Accessories ... 11
3.1.4 Device model with heating ... 11
3.2 Device construction ... 12
3.3 Connection technology ... 13
3.4 Indicators and operational controls ... 14
3.4.1 LED indicators ... 15
3.4.2 Function selection and program selection ... 16
3.4.3 Control buttons ... 17
4 Functions ... 18
4.1 Programs ... 19
4.2 Camera operating modes ... 19
4.2.1 Single trigger mode ... 19
4.2.2 Reading gate control ... 19
4.3 Quality score ... 19
4.4 Offset ... 19
4.5 Teach position ... 20
4.6 Detection status ... 20
4.7 Leuze webConfig tool ... 20
5 Applications ... 21
5.1 Compartment fine positioning of a high-bay storage device ... 21
5.2 Compartment fine positioning in a small-part container storage system ... 22
6 Mounting ... 23
6.1 Determining the mounting position of the positioning sensor ... 23
6.1.1 Selecting a mounting location ... 23
6.1.2 Mounting bracket ... 24
6.1.3 Determining the working distance ... 24
6.2 Mounting the positioning sensor ... 26
6.2.1 Mounting with M4 fastening screws ... 26
6.2.2 Mounting with the BTU 320M-D12 mounting system ... 27
6.2.3 Mounting with the BT 320M mounting bracket ... 27
6.2.4 Mounting with the BTU 320M-D12-RL70 mounting bracket ... 27
6.3 Replace housing hood ... 28

7 Electrical connection ... 29

7.1 Overview ... 30
7.2 PWR/SWI/SWO – voltage supply and switching inputs/outputs ... 31
7.3 HOST - Host input / Ethernet ... 33
7.4 Ethernet star topology ... 34
7.5 Cable lengths and shielding ... 35
7.6 Connecting positioning sensor to MA 150 connection unit ... 35
7.7 Connecting positioning sensor to Ethernet switch ... 37

8 Starting up the device – Basic configuration ... 38

8.1 Measures to be performed prior to the initial commissioning ... 38
8.2 Starting the device ... 38
8.3 Configuring and aligning the device via control buttons ... 39
8.4 Setting the communication parameters ... 40
8.4.1 Manually setting the IP address ... 40
8.4.2 Automatically setting the IP address ... 41
8.4.3 Address Link Label ... 41
8.4.4 Ethernet host communication ... 41
8.4.5 FTP client ... 42
8.5 Configuration via configuration codes ... 43
8.6 Activating device functions ... 43

9 Commissioning – Leuze electronic webConfig tool ... 44

9.1 System requirements ... 44
9.2 Start webConfig tool ... 44
9.3 Short description of the webConfig tool ... 46
9.3.1 Change operating mode ... 46
9.3.2 Menu options of the webConfig tool ... 47
9.3.3 CONFIGURATION menu ... 47
9.3.4 Configuring applications with the wizard ... 48
9.4 Configuring compartment fine positioning ... 49
9.4.1 Selecting the program ... 49
9.4.2 Configuring image acquisition ... 49
9.4.3 Configuring markers ... 50
9.4.4 Assigning measurement values to digital switching outputs ... 51
9.4.5 Outputting measurement values via Ethernet ... 52

10 Interfaces – Communication ... 53

10.1 Online commands ... 53
10.1.1 Overview of commands and parameters ... 53
10.1.2 General online commands ... 53
10.1.3 Online commands for system control ... 56
10.2 XML-based communication ... 56

11 Care, maintenance and disposal ... 57

12 Diagnostics and troubleshooting ... 58

13 Service and support ... 59

13.1 What to do should servicing be required? ... 59

14 Technical data 60
14.1 General specifications 60
14.2 Optical data 61
14.3 Reading performance 61
14.4 Device with heating 62
14.5 Dimensioned drawings 62
14.6 Dimensioned drawings - Accessories 63
15 Order guide and accessories 66
15.1 Nomenclature 66
15.2 Type overview 66
15.3 Optical accessories 67
15.4 Cables accessories 67
15.5 Other accessories 68
16 EC Declaration of Conformity 69
17 Appendix 70
17.1 ASCII character set 70
17.2 Configuration via configuration codes 73
17.3 License terms 74

1 About this document

1.1 Used symbols and signal words

Tab. 1.1: Warning symbols and signal words

⚠	Symbol indicating dangers to persons
NOTE	Signal word for property damage Indicates dangers that may result in property damage if the measures for danger avoidance are not followed.
CAUTION	Signal word for minor injuries Indicates dangers that may result in minor injury if the measures for danger avoidance are not followed.

Tab. 1.2: Other symbols

ℹ	Symbol for tips Text passages with this symbol provide you with further information.
↳	Symbol for action steps Text passages with this symbol instruct you to perform actions.

Tab. 1.3: Terms and abbreviations

CMOS	Semiconductor process for implementing integrated circuits (**C**omplementary **M**etal-**O**xide-**S**emiconductor)
EMC	Electromagnetic compatibility
EN	European standard
FE	Functional earth
FOV	Field of view of the sensor (**F**ield **o**f **V**iew)
IO or I/O	**I**nput/**O**utput
IP address	Network address, which is based on the Internet Protocol (IP)
IPS	Camera-based positioning sensor (**I**maging **P**ositioning **S**ensor)
Actual position	Actual position of the marker (center point)
LED	LED (**L**ight **E**mitting **D**iode)
MAC address	Hardware address of a device in the network (**M**edia **A**ccess **C**ontrol address)
Offset	Shift of the nominal position in the X/Y direction
Marker	Marking on which the sensor determines the position (hole or reflector)
PELV	Protective extra low voltage with reliable disconnection (**P**rotective **E**xtra **L**ow **V**oltage)
HBS	High-bay storage device

Bar	Material on which the marker is located, e.g., steel beam
ROI	Region of interest of the sensor in which a marker is detected (**R**egion **o**f **I**nterest)
Nominal position	Position of the region of interest (coordinate center)
PLC	Programmable Logic Control (corresponds to Programmable Logic Controller (PLC))
SWI	**Sw**itching **I**nput
SWO	**Sw**itching **O**utput
TCP/IP	Internet protocol family (**T**ransmission **C**ontrol **P**rotocol/**I**nternet **P**rotocol)
Tolerance range	Symmetrical area in X/Y direction around the nominal position
UDP	Network transmission protocol (**U**ser **D**atagram **P**rotocol)
UL	**U**nderwriters **L**aboratories

2 Safety

This sensor was developed, manufactured and tested in line with the applicable safety standards. It corresponds to the state of the art.

2.1 Intended use

The positioning sensors of the IPS 200i series are designed for optical, contactless fine positioning relative to a marker for use in steel construction, e.g. on high-bay storage devices in conveyor and storage systems.

Areas of application

The camera-based positioning sensors of the IPS 200i series are especially designed for the following areas of application:

- Compartment fine positioning in high-bay pallet storage systems
- Small-part container storage systems

CAUTION

Observe intended use!

The protection of personnel and the device cannot be guaranteed if the device is operated in a manner not complying with its intended use.

- Only operate the device in accordance with its intended use.
- Leuze electronic GmbH + Co. KG is not liable for damages caused by improper use.
- Read these operating instructions before commissioning the device. Knowledge of the operating instructions is an element of proper use.

NOTICE

Integrated illumination!

The camera-based positioning sensors of the IPS 200i series correspond to the following classification with respect to the integrated lighting:

- **Infrared** illumination: Exempt group in acc. with EN 62471

NOTICE

Comply with conditions and regulations!

- Observe the locally applicable legal regulations and the rules of the employer's liability insurance association.

2.2 Foreseeable misuse

Any use other than that defined under "Intended use" or which goes beyond that use is considered improper use.

In particular, use of the device is not permitted in the following cases:

- in rooms with explosive atmospheres
- in circuits which are relevant to safety
- In food processing
- for medical purposes

NOTICE

Do not modify or otherwise interfere with the device!

- Do not carry out modifications or otherwise interfere with the device.
  The device must not be tampered with and must not be changed in any way.
- The device may only be opened for exchanging the housing hood.
- There are no user-serviceable parts inside the device.
- Repairs must only be performed by Leuze electronic GmbH + Co. KG.

2.3 Competent persons

Connection, mounting, commissioning and adjustment of the device must only be carried out by competent persons.

Prerequisites for competent persons:

- They have a suitable technical education.
- They are familiar with the rules and regulations for occupational safety and safety at work.
- They are familiar with the operating instructions for the device.
- They have been instructed by the responsible person on the mounting and operation of the device.

Certified electricians

Electrical work must be carried out by a certified electrician.

Due to their technical training, knowledge and experience as well as their familiarity with relevant standards and regulations, certified electricians are able to perform work on electrical systems and independently detect possible dangers.

In Germany, certified electricians must fulfill the requirements of accident-prevention regulations BGV A3 (e.g. electrician foreman). In other countries, there are respective regulations that must be observed.

2.4 Disclaimer

Leuze electronic GmbH + Co. KG is not liable in the following cases:

- The device is not being used properly.
- Reasonably foreseeable misuse is not taken into account.
- Mounting and electrical connection are not properly performed.
- Changes (e.g., constructional) are made to the device.

3 Device description

3.1 Device overview

3.1.1 IPS 200i positioning sensor

The camera-based positioning sensors of the IPS 200i series enable fast and simple positioning of high-bay storage devices in conveyor and storage systems.

- Positioning is designed for high-bay container or pallet warehouses.
- The positioning sensor detects holes or reflectors in bars in the rack construction and determines the position deviation in the X and Y direction relative to the nominal position.
- The position deviation is output to the control via four digital outputs or via the interface.
- The positioning sensor can be operated and configured using the integrated webConfig tool via the Ethernet service interface.

The positioning sensor consists of the following components:

- Camera
- Control panel
- Lighting unit: Infrared
- Evaluation unit with the following interfaces:
  - Digital I/Os
  - Ethernet

The positioning sensors of the IPS 200i series are operated as a "stand-alone" single device with individual IP address in an Ethernet topology.

The positioning sensor is optionally available with integrated heating.

Information on technical data and characteristics: see chapter 14 "Technical data".

Markings

The positioning sensor detects the following markers:

- Hole: Dark marking on light background
- Reflector: Light marking on dark background

3.1.2 Performance characteristics

The most important performance characteristics of the camera-based positioning sensor:

- Typical absolute accuracy ±2% +2.5 mm
- Working distances: 100 mm to 600 mm
- Marker diameter 5 mm to 20 mm
- Integrated IR illumination (infrared LED, 850 nm) offers high interference rejection against ambient light.
- Intuitive alignment via four feedback LEDs and webConfig tool
- Two control buttons for intuitive operation without PC
- webConfig, a web-based configuration tool for configuration of all device parameters.
  No additional configuration software necessary
- Installation wizard for simple configuration in just a few steps
- Integrated teach functions for automatic adjustment of the exposure time and hole geometry
- Four programs
- Measurement value output: Four digital switching outputs or Ethernet
- Diagnostics in process mode through image transfer via FTP
- Diagnostics using the output of quality scores and detection status
- Optional model with heating for use to -30 °C
- Variously coded M12 connections for unique assignment of the connections:
  - Voltage supply, switching inputs/outputs
  - Ethernet connection

3.1.3 Accessories

Special accessories are available for the positioning sensor (see chapter 15 "Order guide and accessories"):

- Mounting systems for mounting
- Connection and interconnection cables for M12 connectors
- Housing hood with integrated protective screen made of glass for increased protection against scratches
- Reflectors
- MA 150 modular connection unit for decentralized distribution of the signals (see chapter 7.6 "Connecting positioning sensor to MA 150 connection unit")
- Connection to Ethernet switch (see chapter 7.7 "Connecting positioning sensor to Ethernet switch")

3.1.4 Device model with heating

The positioning sensor is optionally available as a model with integrated heating. In this case, heating is permanently installed ex works.

Features of the integrated heating:

- Extension of the application range -30 °C … +50 °C
- Supply voltage: 18 V … 30 V DC
- Average power consumption: 12 W

3.2 Device construction

1 Lens
2 Control panel with indicator LEDs, control buttons and function/program selection display
3 LEDs for illumination (infrared light)
4 M4 mounting thread
5 Device housing
6 Housing hood
7 M12 connection technology
8 Feedback LEDs (4x green, +X -X +Y -Y)

Fig. 3.1: Device construction

3.3 Connection technology

The device is connected using variously coded M12 connectors:

- A-coded, 12-pin, M12 connection for operating voltage, switching inputs/outputs
- D-coded, 4-pin, M12 connection for the Ethernet connection

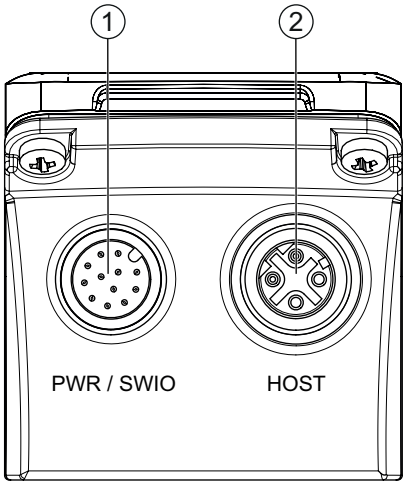

1 PWR / SWIO, M12 plug, 12-pin, A-coded
2 HOST, M12 socket, 4-pin, D-coded

Fig. 3.2: Electrical connections

	NOTICE
	Ready-made cables are available for all connections (see chapter 15.4 "Cables accessories").

	NOTICE
	Shielding connection! ↳ The shielding is connected via the M12 connector housing.

3.4 Indicators and operational controls

The device is equipped with the following indicators and operational controls:

- Three indicator LEDs (PWR, NET, LINK)
- Two control buttons
- Six indicator LEDs for function selection (AUTO, ADJ) and program selection (PROGRAM 1 … 4)
- Four green feedback LEDs for aligning the positioning sensor

  The positioning sensor depicts the deviations in the directions -X, +Y, +X, -Y using four green feedback LEDs. These LEDs are activated upon shipment of the device from the factory and can be deactivated via the webConfig tool.

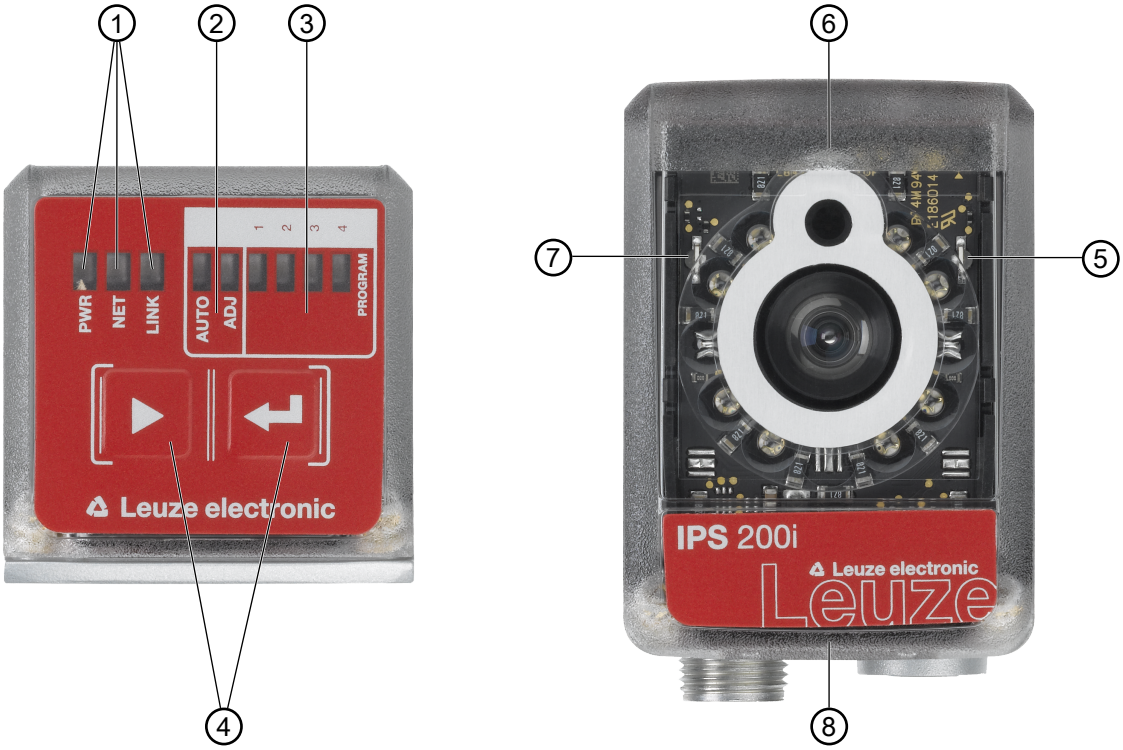

1 LED indicators: PWR, NET, LINK
2 Function selection
3 Program selection
4 Control buttons
5 -X position; signals whether the positioning sensor is located in the tolerance range
6 +Y position; signals whether the positioning sensor is located in the tolerance range
7 +X position; signals whether the positioning sensor is located in the tolerance range
8 -Y position; signals whether the positioning sensor is located in the tolerance range

Fig. 3.3: Indicators and operational controls

3.4.1 LED indicators

PWR LED

Tab. 3.1: PWR indicators

Color	State	Description
---	OFF	Device off No operating voltage
Green	Flashing	Device ok • Initialization phase • Positioning not possible • Operating voltage applied • Self test running
	ON (continuous light)	Device ok • Positioning possible • Self test successfully finished • Device monitoring active
Orange	ON (continuous light)	Service mode • Positioning possible • No data on the host interface
	Flashing	Wave function (synchronous with NET LED) • Positioning possible
Red	Flashing	Device ok, warning set • Positioning possible • Temporary operating fault
	ON (continuous light)	Device error/parameter enable No positioning possible

NET LED

Tab. 3.2: NET indicators

Color	State	Description
---	OFF	No operating voltage • No communication possible • Ethernet protocols not released
Green	Flashing	Initialization of the device Establishing communication
	ON (continuous light)	Operation ok • Network mode ok • Connection and communication to Host established
Red	Flashing	Communication error • Temporary connection error • If DHCP active: No IP address could be obtained
	ON (continuous light)	Network error • No connection established • No communication possible

ПРОМЭЛЕКТРОНИКА / sales@prom-elec.com

LINK LED

Tab. 3.3: LINK indicators

Color	State	Description
Green	ON (continuous light)	Ethernet connected (LINK)
Yellow	Flashing	Data communication (ACT)

Feedback LEDs

Tab. 3.4: Feedback LED indicators

Color	State	Description
---	OFF	Device off No operating voltage No positioning operation active No marker found or marker not in the corresponding quadrant
Green	Flashing	Flashing frequency signals the marker distance to the nominal position: • Low frequency: Large distance • High frequency: Short distance
	ON (continuous light)	Marker is in nominal position (coordinate origin). The positioning sensor is optimally positioned if all four feedback LEDs illuminate.

3.4.2 Function selection and program selection

Function selection

The following functions are selected and displayed via the bar graph display (see chapter 8.6 "Activating device functions"):

- *AUTO*: Auto setup function for determining the optimum exposure and marker settings. Additional teaching of the position in the selected program, if possible.
- *ADJ*: Adjustment function for aligning the device and for teaching-in the position in the current program

The individual functions are selected and activated with the control buttons.

- Select function with the navigation button ▶: The function LED flashes.
- Activate function with the enter button ↵: The function LED illuminates continuously.

	NOTICE
	If you activate the *AUTO* or *ADJ* function via the control buttons, the device accepts no commands via the process interface. Process mode is thereby interrupted.

Program selection

The control buttons and PROGRAM display can be used to select, activate and display programs that are stored in the device.

3.4.3 Control buttons

Function selection and program selection are controlled via the control buttons.

	NOTICE
	In the *Service* operating mode (which is set using the webConfig tool), the positioning sensor cannot be operated using the control buttons.

- ▶ – navigation button: Scroll through the functions in the function and program selection display from left to right.
- ↵ – enter button: Scroll through the functions in the function and program selection display.

	NOTICE
	A preselected function (flashing LED) does not yet have any influence on the functionality. If no button is pressed for a longer period of time, flashing of the LED is ended automatically by the device.

	NOTICE
	The *AUTO* and *ADJ* functions always apply to the currently valid program. Both functions must be deactivated again by pressing the enter button ↵.

Example: Auto setup of program 2

↳ Press the navigation button ▶ twice.

⇨ The PROGRAM 2 LED flashes and the program is preselected.

↳ Press the enter button ↵ once.

⇨ Program 2 is active.

↳ Press the navigation button ▶ until the AUTO LED flashes.

⇨ The *AUTO* function is preselected.

↳ Press the enter button ↵.

⇨ Auto setup is active and the four feedback LEDs indicate the alignment.

↳ Align the positioning sensor so that all four feedback LEDs permanently illuminate green.

↳ Press the enter button ↵.

⇨ Auto setup is concluded.

4 Functions

This chapter describes the functions of the positioning sensor:

- Programs (see chapter 4.1 "Programs")
- Camera operating modes (see chapter 4.2 "Camera operating modes")
- Quality score (see chapter 4.3 "Quality score")
- Offset (see chapter 4.4 "Offset")
- Teach position (see chapter 4.5 "Teach position")
- Detection status (see chapter 4.6 "Detection status")

The sensor operates in two dimensions, X and Y:

- X corresponds to the horizontal axis.
- Y corresponds to the vertical axis.

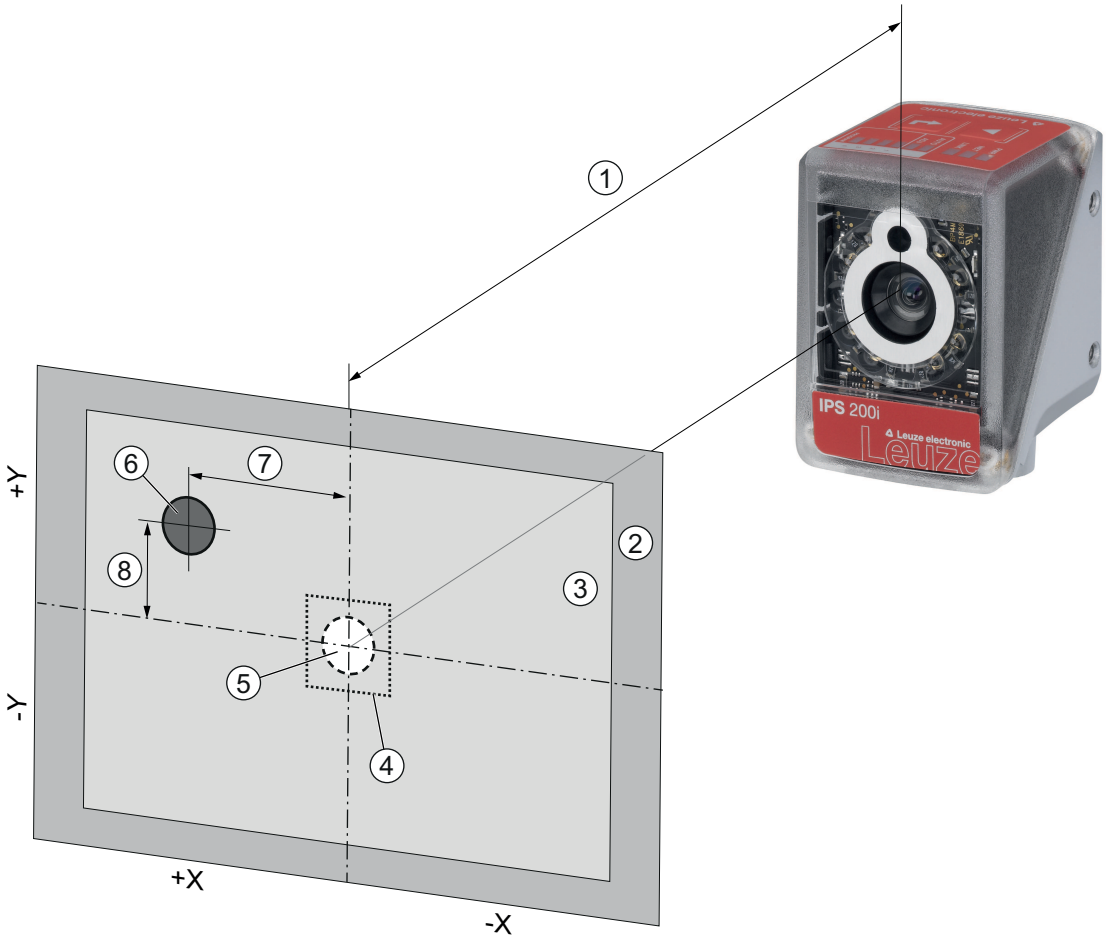

1 Working distance
2 Field of view (FOV)
3 Region of interest (ROI)
4 Tolerance range
5 Nominal position (marker)
6 Actual position (marker)
7 X deviation
8 Y deviation

Fig. 4.1: Mode of operation of the positioning sensor

4.1 Programs

There are four programs stored in the positioning sensor. The programs can be configured, e.g., to compensate for the position difference between the loading position and unloading position of the high-bay storage device.

Switch between or activate programs in the device as follows:

- Via the webConfig tool (see chapter 4.7 "Leuze webConfig tool")
- Via the SWI3 and SWI4 switching inputs (default setting)
- Via control buttons on the device
- Via an Ethernet online command

On delivery, all programs are optimized as follows:

- Working distance: 300 mm
- Hole diameter: 13 mm
- Offset X/Y: 0 mm
- Tolerance +/- X/Y: 4 mm
- Marker tolerance: 15 %

4.2 Camera operating modes

The camera operating mode defines how the positioning sensor starts and ends a positioning operation.

4.2.1 Single trigger mode

In the "Single trigger mode" camera operating mode, the positioning sensor captures one image and attempts to determine the actual position of the marker relative to the nominal position.

4.2.2 Reading gate control

Upon activation, the reading gate control opens a time window in the device for the positioning operation. In this time window, the positioning sensor continuously determines the relative position and outputs the position. The reading gate control must be deactivated again via the trigger signal.

The "Reading gate control" camera operating mode is activated upon shipment from the factory.

4.3 Quality score

The quality score is a measure of the quality of the found marker and refers to the shape factor, the scaling factor and the contrast of the taught marker. The quality score is output in percent [%].

Limit values can be defined in the positioning sensor via the quality score:

- Limit value at which a switching output is set as a warning if the value is less than or exceeds the limit.
- Limit value at which images are transferred via Ethernet / interface (FTP).
- In addition, the determined quality score can be output via the interface.

4.4 Offset

Offset in the X/Y direction that is taken into account for the positioning, e.g., when moving goods in and out of storage. Here, the offset shifts the nominal position relative to the center point of the region of interest. The offset can be in the positive or negative direction.

	NOTICE
	You can set one offset value per program.

Example

You would like the positioning sensor to be 20 mm higher when moving a pallet into storage than when moving it out of storage. This offset is stored in program 1.

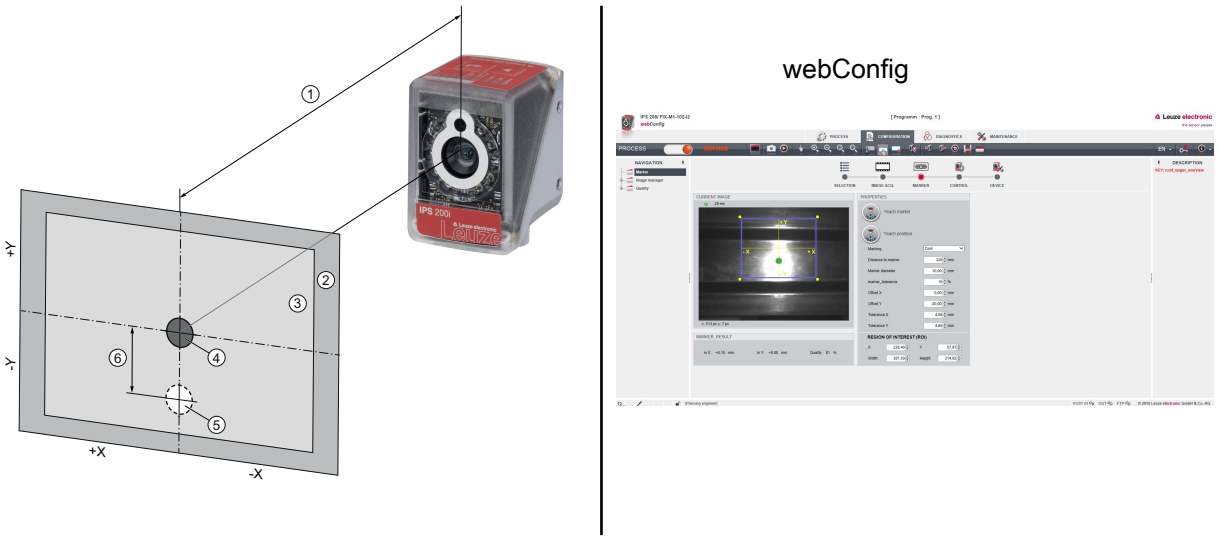

1 Working distance
2 Field of view (FOV)
3 Region of interest (ROI)
4 Actual position (marker)
5 Nominal position
6 Offset

Fig. 4.2: Example: Offset

4.5 Teach position

For fine adjustment and as an alternative to precise mechanical alignment, you can teach-in the position of the device. When teaching-in the position, the coordinate system of the region of interest is placed in the center point of the detected marker.

You can activate the function in the device as follows:

- Via the webConfig tool (see chapter 4.7 "Leuze webConfig tool")
- Via control buttons on the device (via AUTO mode or ADJ mode)
- Via an Ethernet online command

If the teaching-in of the position fails, it may be due to the following reasons:

- The marker is not located in the device's region of interest.
- The limits of the new region of interest determined by teaching-in are not completely in the field of view.

4.6 Detection status

The detection status signals the status of the current detection:

- `0`: Detection successful – one marker detected in region of interest
- `1`: Detection not successful – several markers detected in region of interest
- `2`: Detection not successful – no markers detected in region of interest

4.7 Leuze webConfig tool

The webConfig configuration tool offers a graphical user interface for the configuration of the positioning sensor via a PC (see chapter 9 "Commissioning – Leuze electronic webConfig tool").

The wizard of the webConfig tool can be used to easily configure the positioning sensor in just a few steps.

5 Applications

After performing rough positioning, the positioning sensor is used for the optical, contactless fine positioning of a high-bay storage device in the X and Y direction.

5.1 Compartment fine positioning of a high-bay storage device

Fig. 5.1: Compartment fine positioning of a high-bay storage device in a single-depth high-bay pallet warehouse

5.2 Compartment fine positioning in a small-part container storage system

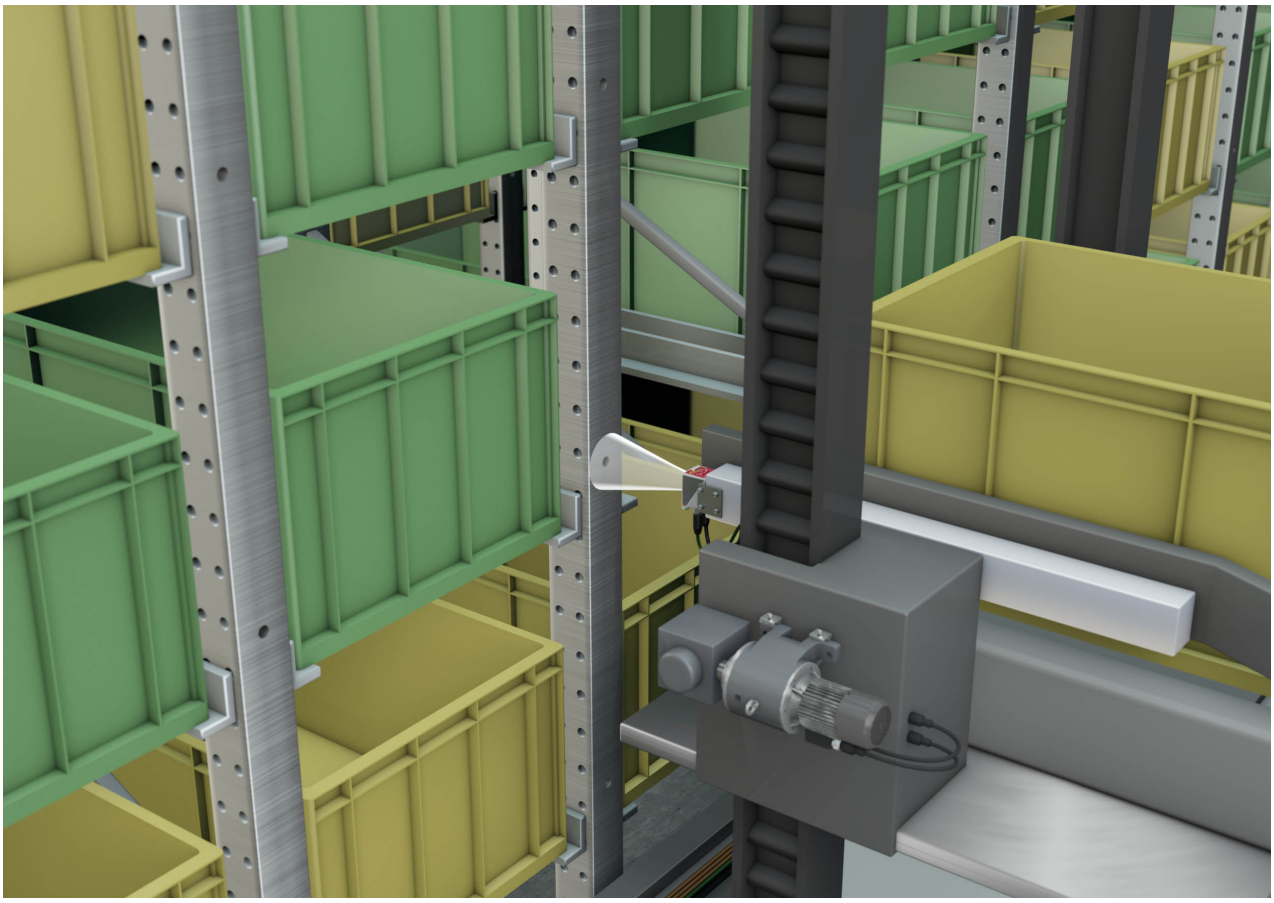

Fig. 5.2: Compartment fine positioning in a small-part container storage system

6 Mounting

The positioning sensor can be mounted in the following ways:

- Mounting using four M4 mounting threads on the rear of the device
- Mounting using two M4 mounting threads on each of the side surfaces of the device
- Mounting on a 12 mm rod using the BTU 320M-D12 mounting system
- Mounting on the BT 320M mounting bracket

	NOTICE
	↳ Mount the device on a metal mounting bracket.

6.1 Determining the mounting position of the positioning sensor

6.1.1 Selecting a mounting location

	NOTICE
	The size of the marker influences the maximum working distance. Therefore, when selecting a mounting location and/or the suitable marker, be certain to take into account the different positioning characteristics of the sensor with various markers.

	NOTICE
	Observe when choosing the mounting location! ↳ Make certain that the required environmental conditions (humidity, temperature) are maintained. ↳ Avoid possible soiling of the reading window due to liquids, abrasion by boxes, or packaging material residues. ↳ Ensure the lowest possible chance of damage to the sensor through mechanical collision or jammed parts. ↳ Avoid possible ambient light influence (no direct sunlight).

Take the following factors into account when selecting the correct mounting location:

- Size, orientation, and position tolerance of the markers on the objects to be scanned.
- Reading distance that results from the marker size (see chapter 6.1.3 "Determining the working distance").
- Time of data output.
- The permissible line lengths between sensor and host system depending on which interface is used.
- Visibility of the control panel and access to the control buttons.

6.1.2 Mounting bracket

If the illumination light of the sensor is directly incident on the surface of the bar at an angle of 90°, total reflection occurs. The illumination light directly reflected may overload the sensor and thereby adversely affect positioning.

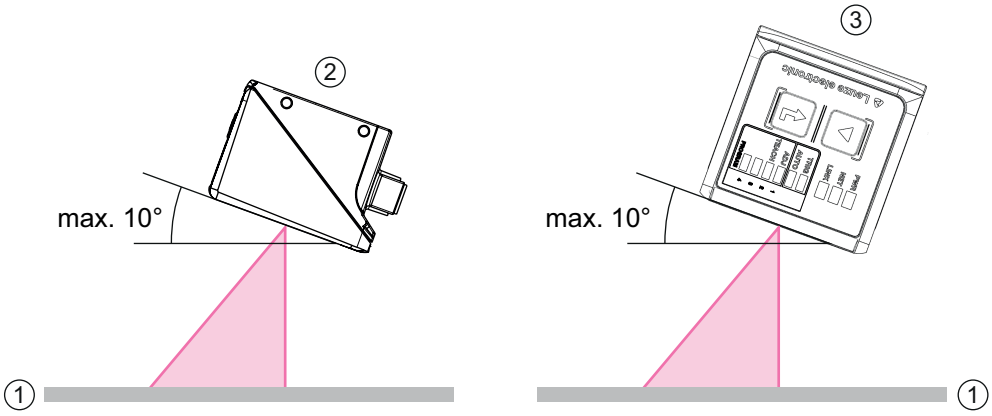

Recommended tilt angle or angle of inclination: maximum 10°

1 Bar

2 Mounting with tilt angle

3 Mounting with angle of inclination

Fig. 6.1: Mounting with tilt angle or angle of inclination

	NOTICE
	The optimum tilt angle or angle of inclination is dependent on the surface of the bar and the working distance. Normally, a tilt angle of 5° and an angle of inclination of 0° is recommended.

6.1.3 Determining the working distance

In general, the sensor's field of view increases as the working distance becomes larger. This also results in a decrease in the resolution, however.

The following graphic shows typical working distances for the sensor.

	NOTICE
	Positioning while in motion is dependent on the marker type, marker diameter and the position of the marker in the field of view.

For information on the relationship between working distance and field of view size, see section "Relationship between working distance and field of view size".

Working distance for the sensor with M optics

NOTICE

Note that the actual working distance is also influenced by factors such as marker geometry, mounting bracket, reflection properties of the bar, etc., and may therefore differ from the distances listed here.

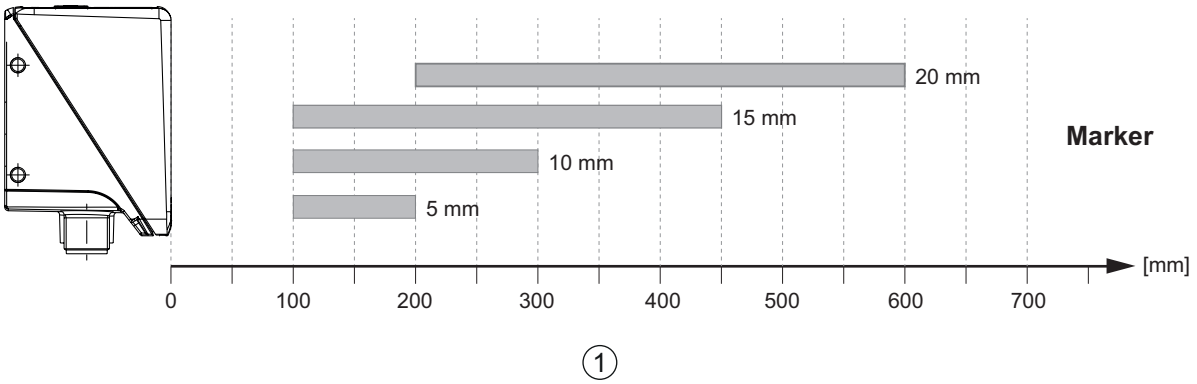

1 Working distance [mm]

Fig. 6.2: Typical working distances for markers with different marker diameters

Relationship between working distance and field of view size

The following images show the relationship between the working distance and the resulting field of view for the optics model of the sensor. The working distance is the path from the front edge of the sensor to the marker.

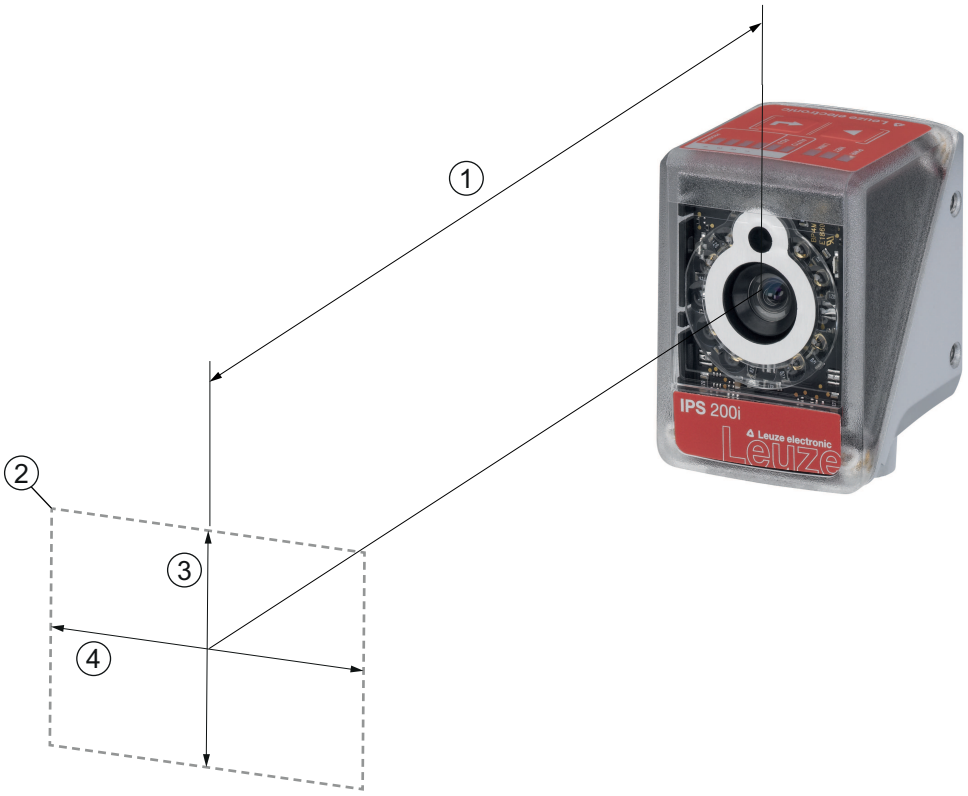

1 Working distance
2 Field of view (FOV)
3 Height of the field of view
4 Width of the field of view

Fig. 6.3: Working distance and field of view

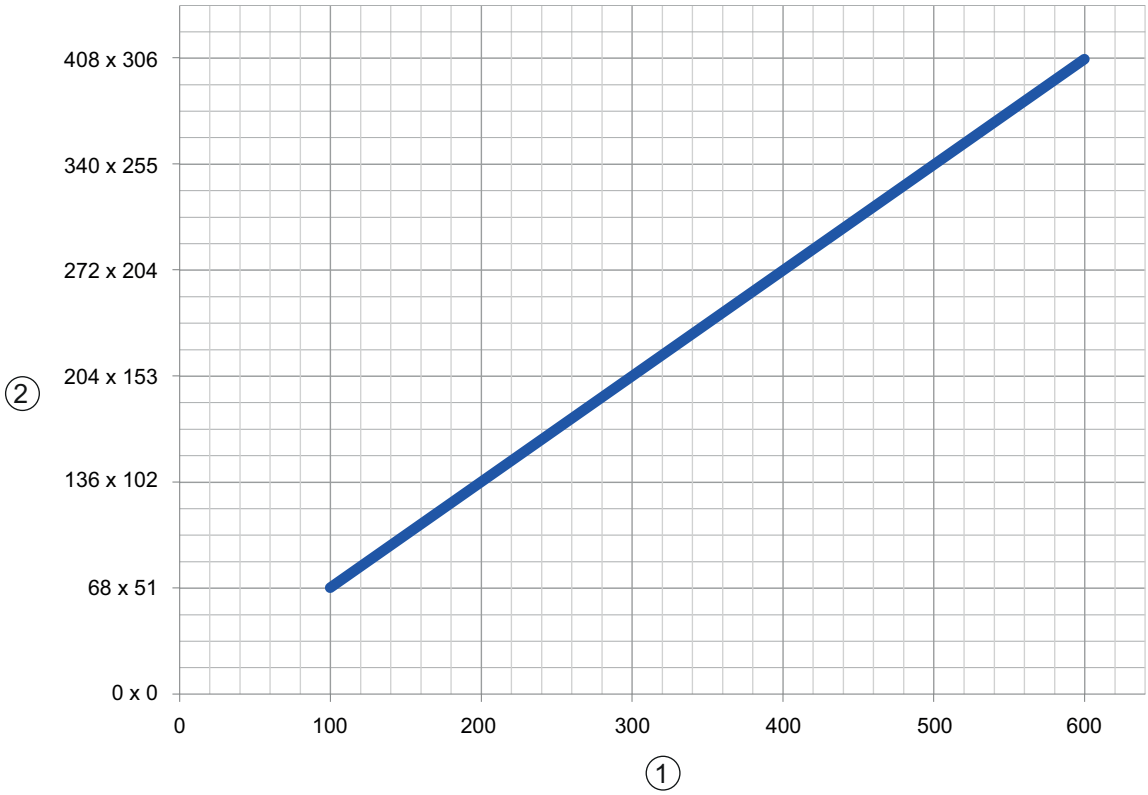

1 Working distance [mm]
2 Field of view: width x height [mm]

Fig. 6.4: Relationship between working distance and field of view size

6.2 Mounting the positioning sensor

NOTICE	
!	**Observe during mounting!** ↳ Make certain that there is only one marker in the sensor's region of interest. ↳ All markers that are to be detected must have the same diameter. Other objects with the same diameter (e.g., screw heads) must not be located in the sensor's region of interest. ↳ Make certain that the surface that surrounds a marker reflects diffusely. ↳ The area behind the marker (in the case of holes) should remain unbuilt within an area of 500 mm. ↳ For closed profiles, use only reflectors as markers. ↳ Avoid glossy, reflective surfaces and light sources behind the markers (in the case of holes). ↳ Align the sensor as parallel to the marker as possible. ↳ Make certain that the markers are located as close as possible to the center of the sensor's region of interest. ↳ The working distance set in the device must correspond to the actual working distance.

6.2.1 Mounting with M4 fastening screws

↳ Mount the device on the system with M4 fastening screws (not included in delivery contents).

⇨ Max. tightening torque of the fastening screws: 1.4 Nm

⇨ Location and thread depth of the mounting thread: see chapter 14.5 "Dimensioned drawings"

6.2.2 Mounting with the BTU 320M-D12 mounting system

Mounting with a BTU 320M-D12 mounting system is intended for 12-mm rod mounting. For ordering information, see chapter 15.5 "Other accessories".

- Mount the mounting system on the rod with the clamp profile (system-side).
- Mount the device to the mounting system with M4 fastening screws.
  - ⇨ Max. tightening torque of the fastening screws: 1.4 Nm
  - ⇨ Location and thread depth of the mounting thread: see chapter 14.5 "Dimensioned drawings"

6.2.3 Mounting with the BT 320M mounting bracket

Mounting with a BT 320M mounting bracket is intended for wall mounting. For ordering information, see chapter 15.5 "Other accessories".

- Mount the mounting bracket on the system side with M4 fastening screws (included in delivery contents).
- Mount the device to the mounting bracket with M4 fastening screws.
  - ⇨ Max. tightening torque of the fastening screws: 1.4 Nm
  - ⇨ Location and thread depth of the mounting thread: see chapter 14.5 "Dimensioned drawings"

6.2.4 Mounting with the BTU 320M-D12-RL70 mounting bracket

Mounting using a BTU 320M-D12-RL70 mounting bracket is intended for 12 mm rod mounting in combination with the RL-70/40r-003-M12 ring light. For ordering information, see chapter 15.5 "Other accessories".

- Mount the ring light to the mounting bracket with M4 fastening screws.
- Mount the device to the mounting bracket with M4 fastening screws.
  - ⇨ Max. tightening torque of the fastening screws: 1.4 Nm
  - ⇨ Location and thread depth of the mounting thread: see chapter 14.5 "Dimensioned drawings"
- Mount the mounting bracket on the rod with the clamp profile (system-side).

6.3 Replace housing hood

In individual cases, you can exchange the housing hood of the sensor, e.g., if the protective screen is scratched. For ordering information, see chapter 15.3 "Optical accessories".

	NOTICE
!	**Only replace the housing hood while the device is in a de-energized state!** Only replace the housing hood if no voltage is being applied to the device. ↳ Disconnect the device from the voltage supply before replacing the device hood.

	NOTICE
!	**Check the seal before mounting!** ↳ Check the seal on the base of the device housing for cleanliness before mounting the new housing hood.

	NOTICE
!	**Clean the new housing hood before mounting!** ↳ Clean the new housing hood with a soft cloth before mounting.

- ↳ Loosen the four fastening screws of the housing hood.
- ↳ First tip the housing hood downward and away from the housing base.
- ↳ Then lift the housing hood up and off of the housing base.
- ↳ Then mount the new housing hood in the reverse order. The tightening torque of the fastening screws is 0.25 Nm.

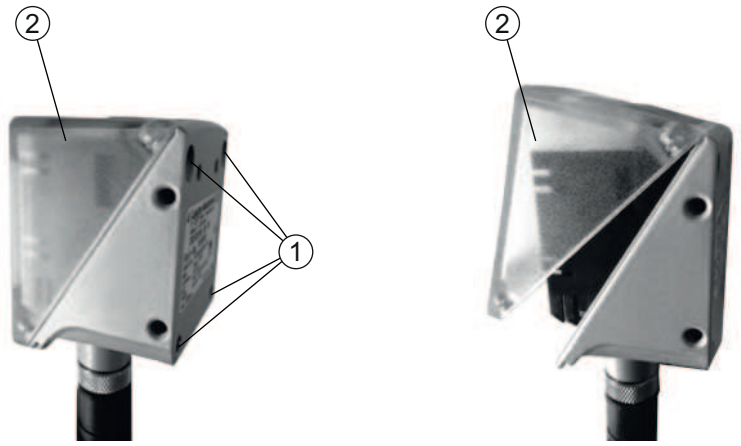

1 Fastening screws
2 Housing hood

Fig. 6.5: Replace housing hood

7 Electrical connection

CAUTION

Safety notices!

- Before connecting the device, please ensure that the operating voltage matches the value printed on the nameplate.
- Only allow competent persons to perform the electrical connection.
- Ensure that the functional earth (FE) is connected correctly.
  Fault-free operation is only guaranteed if the functional earth is connected properly.
- If faults cannot be rectified, take the device out of operation. Protect the device from accidentally being started.

NOTICE

Shielding connection!

The shielding is connected via the M12 connector housing.

NOTICE

UL applications!

For UL applications, use is only permitted in Class 2 circuits in accordance with the NEC (National Electric Code).

NOTICE

Protective Extra Low Voltage (PELV)!

The device is designed in accordance with protection class III for supply with PELV (Protective Extra-Low Voltage).

NOTICE

Degree of protection IP65!

Degree of protection IP65 is achieved only if the connectors and caps are screwed into place.

7.1 Overview

The sensor is provided with the following connections:

- PWR / SWIO: A-coded, 12-pin, M12 connection for operating voltage, switching inputs/outputs
- HOST: D-coded, 4-pin, M12 connection for the Ethernet connection

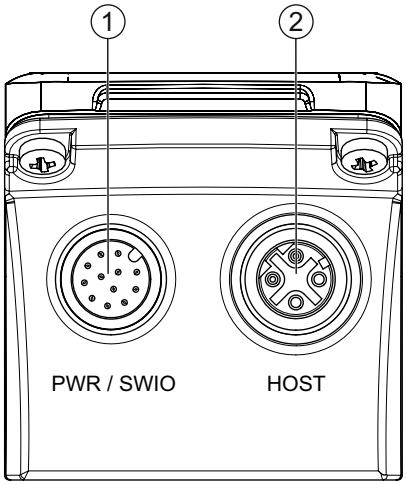

1 PWR / SWIO, M12 plug, 12-pin, A-coded
2 HOST, M12 socket, 4-pin, D-coded

Fig. 7.1: Electrical connections

NOTICE	
	Ready-made cables are available for all connections (see chapter 15.4 "Cables accessories").

Voltage supply and switching inputs/outputs

The voltage supply (18 V … 30 V DC) is connected at the PWR / SWIO M12 plug.

Eight freely programmable switching inputs/outputs for individual adaptation to the respective application are also available on the PWR / SWIO M12 plug.

Standalone operation in Ethernet network

The sensor is operated as a "stand-alone" single device in an Ethernet star topology with individual IP address. The host interface of the superior system is connected to the HOST M12 socket.

7.2 PWR/SWI/SWO – voltage supply and switching inputs/outputs

12-pin M12 plug (A-coded)

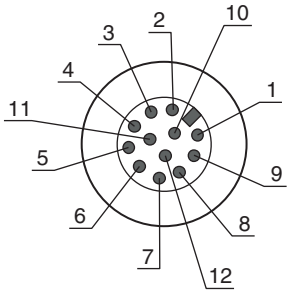

Fig. 7.2: PWR/SWI/SWO connection

Tab. 7.1: PWR/SWI/SWO pin assignment

Pin	Designation	Core color	Assignment
1	VIN	Brown	+18 … +30 V DC operating voltage
2	GND	Blue	Negative operating voltage (0 V DC)
3	SWI1	White	Digital switching input 1 (trigger)
4	SWO2	Green	Digital switching output 2 (READY)
5	FE	Pink	Functional earth
6	n.c.	Yellow	Not used
7	SWO5	Black	Digital switching output (-X)
8	SWO6	Gray	Digital switching output (+X)
9	SWO7	Red	Digital switching output (-Y)
10	SWO8	Violet	Digital switching output (+Y)
11	SWI3	Gray/pink	Digital switching input 3 (Program Selection 0)
12	SWI4	Red/blue	Digital switching input 4 (Program Selection 1)
Thread (M12 plug)	FE (functional earth)		Connection cable shield. The shield of the connection cable is on the thread of the M12 plug.

NOTICE

The core colors only apply if Leuze electronic's original connection cables are used (see chapter 15.4 "Cables accessories").

NOTICE

UL applications!

For UL applications, use is only permitted in Class 2 circuits in accordance with the NEC (National Electric Code).

Switching input/output

The sensor is provided with eight freely programmable switching inputs/outputs (SWI1, SWI3, SWI4, SWO2, SWO5 … SWO8).

NOTICE	
	The function as switching input or switching output is set via the webConfig configuration tool (**CONFIGURATION > DEVICE > Switching inputs/outputs**, see chapter 9 "Commissioning – Leuze electronic webConfig tool").

The eight switching inputs/outputs are configured by default as follows:

- SWI1
  Switching input: Trigger (default)
- SWO2
  Switching output: device ready (default)
- SWI3
  Switching input: Program selection 0
- SWI4
  Switching input: Program selection 1
- SWO5
  Switching output –X position
- SWO6
  Switching output +X position
- SWO7
  Switching output –Y position
- SWO8
  Switching output +Y position

Function as switching input

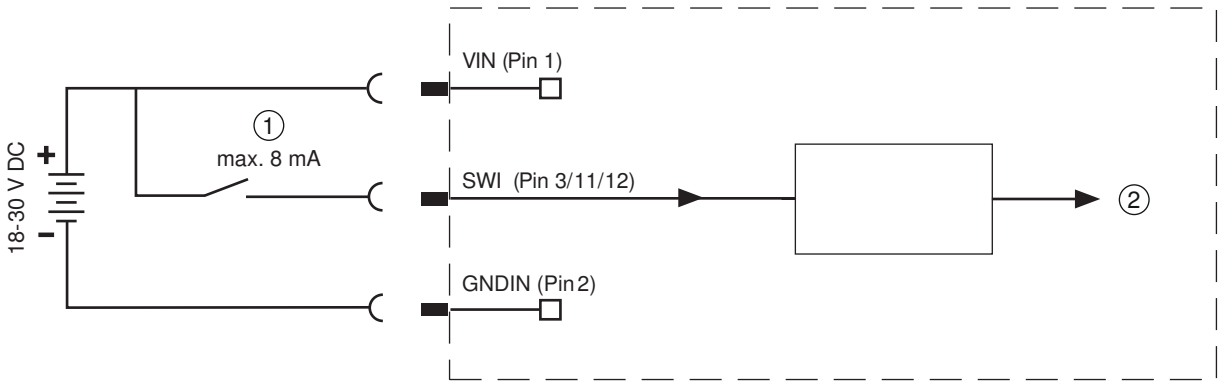

1 Switching input
2 Switching input to controller

Fig. 7.3: Switching input SWI1, SWI3 and SWI4 connection

NOTICE	
	Maximum input current! ↳ The input current of the respective switching input is maximum 8 mA.

Function as switching output

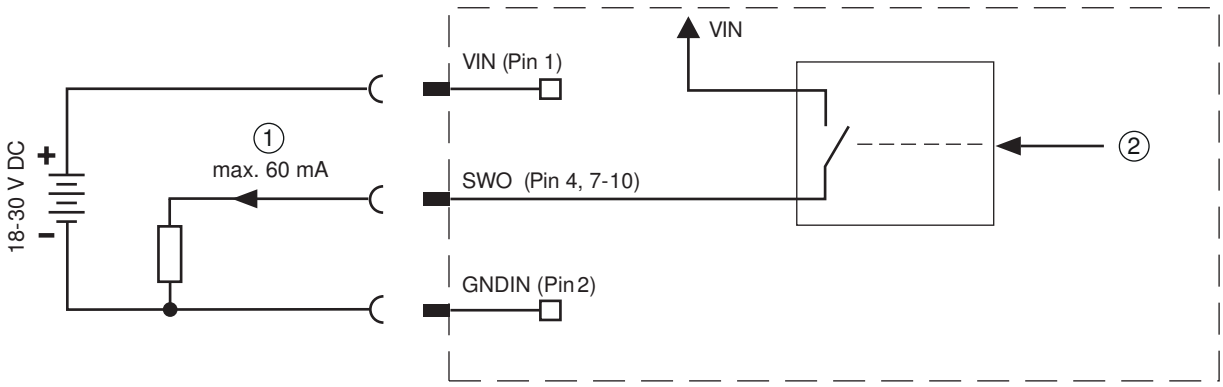

1 Switching output
2 Switching output from controller

Fig. 7.4: Switching output SWO2, SWO5 … SWO8 connection

NOTICE

Maximum loading of the switching outputs!

- Do not load the respective switching output of the sensor with more than 60 mA at +18 V … +30 V DC in normal operation.
- Each configured switching output is short-circuit proof.

7.3 HOST - Host input / Ethernet

4-pin, M12 socket (D-coded) for connecting to HOST.

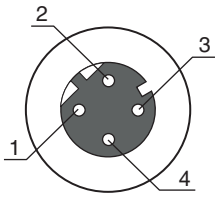

Fig. 7.5: HOST connection

Tab. 7.2: HOST pin assignment

Pin/terminal	Designation	Assignment
1	TD+	Transmit Data +
2	RD+	Receive Data +
3	TD-	Transmit Data -
4	RD-	Receive Data -
Thread (M12 socket)	FE (functional earth)	Connection cable shield. The shield of the connection cable is on the thread of the M12 socket.

NOTICE

Use ready-made cables!

- If possible, use the ready-made cables from Leuze electronic (see chapter 15.4 "Cables accessories").

7.4 Ethernet star topology

The sensor is operated as a "stand-alone" single device in an Ethernet star topology with individual IP address.

- The sensor is designed as an Ethernet device with a standard baud rate of 10/100 Mbit.
- A fixed MAC address is assigned to each device by the manufacturer; this address cannot be changed.
- The device automatically supports the transmission rates of 10 Mbit/s (10BASE T) and 100 Mbit/s (10BASE TX), as well as auto-negotiation and auto-crossover.
- The device supports the following protocols and services:
  - TCP / IP (client/server)
  - UDP
  - DHCP
  - ARP
  - PING
- For communication with the superior host system, the corresponding TCP/IP protocol (client/server mode) or UDP must be selected.

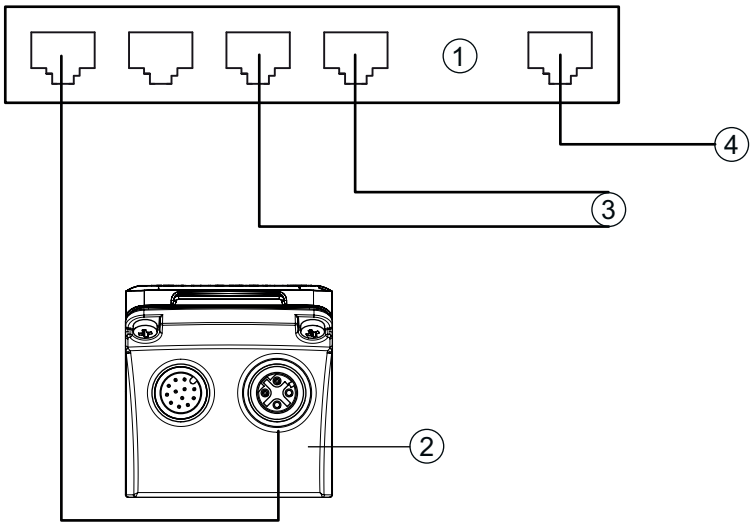

1 Ethernet switch
2 Positioning sensor of the IPS 200i series
3 Other network participants
4 Host interface - PC/control

Fig. 7.6: Ethernet star topology

Ethernet cable assignment

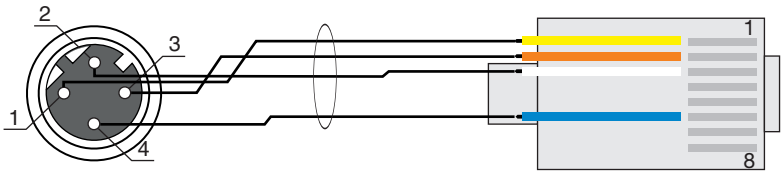

Fig. 7.7: HOST to RJ-45 cable assignments

Designed as shielded cable, max. 100 m.

Pin (M12)	Designation	Pin/core color (RJ45)
1	TD+	1/yellow
2	RD+	3/white
3	TD-	2/orange
4	RD-	6/blue

NOTICE

Self-configured cables with Ethernet interface!

- Ensure adequate shielding.
- The entire interconnection cable must be shielded and earthed.
- The RD+/RD- and TD+/TD- wires must be stranded in pairs.
- Use at least a CAT 5 cable for the connection.

7.5 Cable lengths and shielding

Observe the maximum cable lengths and the shielding types:

Connection	Interface	Max. cable length	Shielding
Network from the first IPS 200i to the last network participant	Ethernet	Max. segment length: 100 m for 100BASE-TX twisted pair (min. CAT 5)	Shielding absolutely necessary
Switching input		10 m	Not necessary
Switching output		10 m	Not necessary
IPS 200i power supply unit		30 m	Not necessary

7.6 Connecting positioning sensor to MA 150 connection unit

The signals from the sensor are decentrally distributed in the high-bay storage device via the MA 150 modular connection unit. The following components can be connected to the MA 150 connection unit:

- Positioning sensors of the IPS 200i series
- Photoelectric sensor/diffuse sensor to activate the sensor
- Voltage supply
- External illumination

Circuit diagram example for electrical installation with MA 150 connection unit

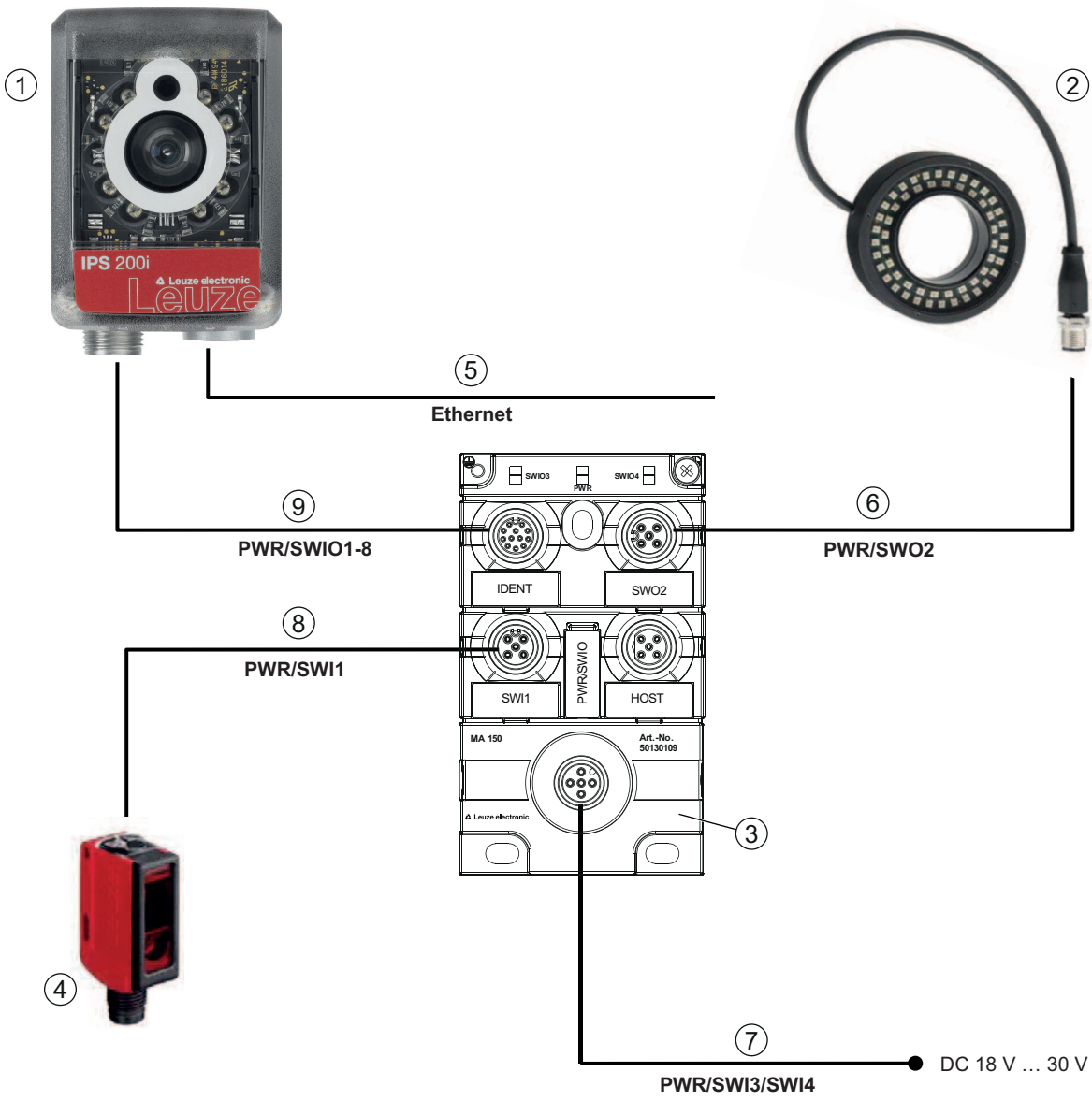

1	IPS 200i positioning sensor
2	External illumination e.g., 50132511
3	MA 150 modular connection unit
4	Sensor (photoelectric sensor/diffuse sensor)
5	Cable, M12 connector/RJ45, 4-pin, 2 m e.g., 50109880
6	Cable, M12 connector/socket, 3-pin, 2 m e.g., 50130734
7	Cable, M12 socket/open cable end, 5-pin, 2 m e.g., 50104555
8	Cable, M12 socket/connector, 4-pin, 2 m e.g., 50110126
9	Cable, M12 socket/connector, 12-pin, 2 m e.g., 5030284

Fig. 7.8: Circuit diagram example with MA 150 connection unit

7.7 Connecting positioning sensor to Ethernet switch

The Ethernet communication is decentrally distributed in the high-bay storage device via the Ethernet switch.

Circuit diagram example for the connection to an Ethernet switch

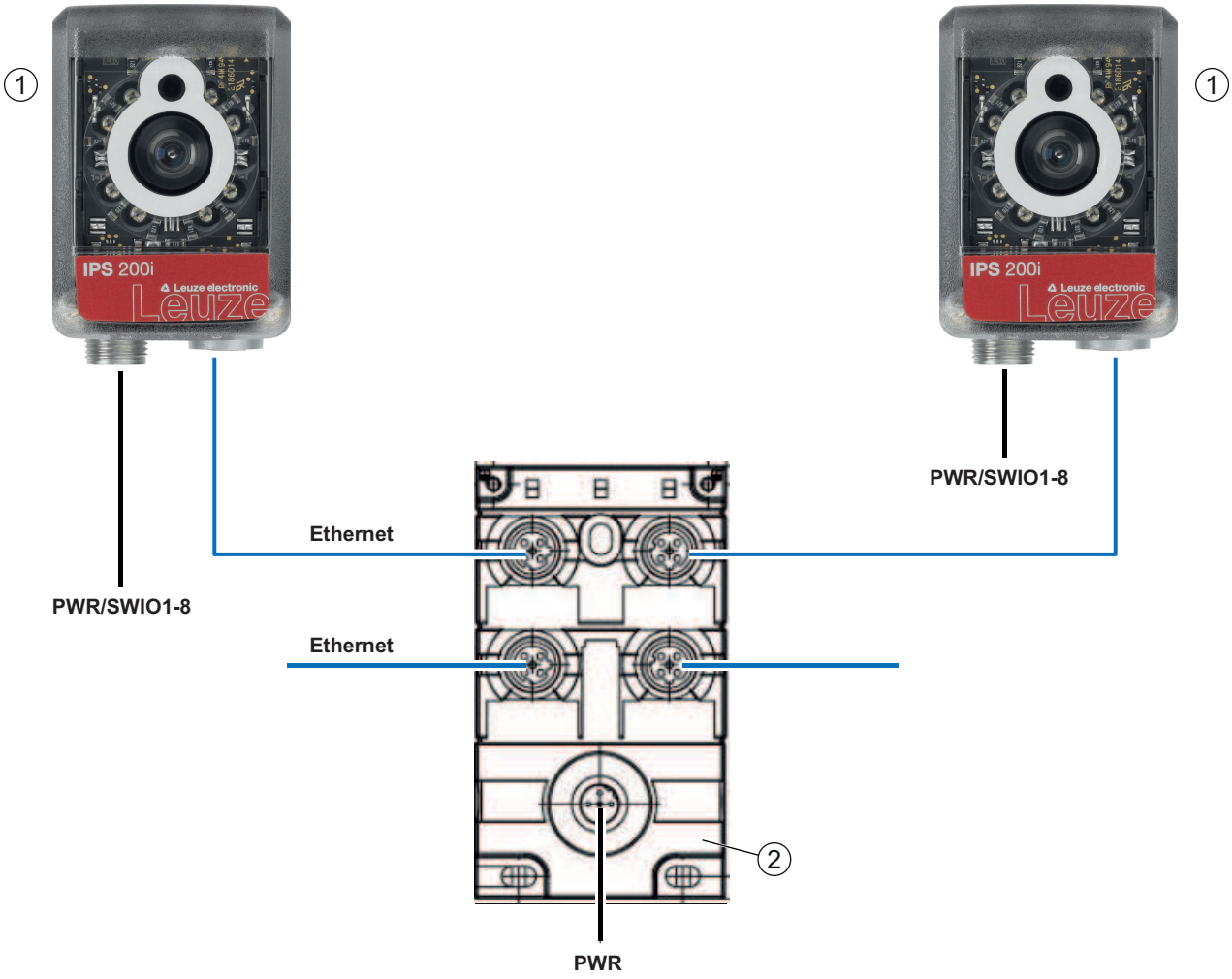

1 IPS 200i positioning sensor
2 Ethernet switch

Fig. 7.9: Circuit diagram example for connection to Ethernet switch

8 Starting up the device – Basic configuration

8.1 Measures to be performed prior to the initial commissioning

	NOTICE
	↳ Observe the notices for device arrangement (see chapter 6.1 "Determining the mounting position of the positioning sensor"). ↳ If possible, always trigger the positioning sensor with the aid of commands or an external signal transmitter (e.g. photoelectric sensor/diffuse sensor). ↳ Before commissioning, familiarize yourself with the operation and configuration of the device. ↳ Before connecting the operating voltage, recheck all connections and ensure that they have been properly made.

	NOTICE
	No additional configuration software is necessary for commissioning.

8.2 Starting the device

↳ Connect the 18 V … 30 V DC operating voltage.

↳ After applying the operating voltage, the device operates with the factory settings.

- The following parameters are stored in the factory setting:
  - Working distance: 300 mm
  - Marker diameter: 13 mm
  - Marker: hole or reflector
  - Offset X/Y: 0 mm
  - Tolerance +/- X/Y: 4 mm
  - Marker tolerance: 15 %
- Activation via SWI1 (default: reading gate control).
- If a marker is detected, the following is output:
  - Switching outputs: Position value via SWO5 … SWO8 (default)
  - Ethernet communication: Position value X/Y, status, quality score
  - Feedback LEDs: Status of the switching outputs SWO5 … SWO8

	NOTICE
	Deviations from these settings must be set via the webConfig tool (see chapter 9 "Commissioning – Leuze electronic webConfig tool").

↳ Using the online commands, important device functions can be checked, e.g. reading activation (see chapter 10.1 "Online commands").

	NOTICE
	For information on how to proceed in the event of problems during commissioning of the devices see chapter 12 "Diagnostics and troubleshooting". If a problem occurs that cannot be rectified even after checking all electrical connections and settings on the devices and on the host, contact your responsible Leuze electronic subsidiary or Leuze electronic customer service (see chapter 13 "Service and support").

8.3 Configuring and aligning the device via control buttons

Prerequisites:

- The positioning sensor is correctly mounted; in particular, at the correct working distance (see chapter 6 "Mounting").
- The positioning sensor is correctly connected (see chapter 7 "Electrical connection").
- The application data is set via the webConfig tool (see chapter 9 "Commissioning – Leuze electronic webConfig tool").
- The housing hood of the positioning sensor is aligned parallel to the marker.
- The marker is as close as possible to the center of the positioning sensor's region of interest.

	NOTICE
	The working distance set in the device must correspond to the actual working distance.

	NOTICE
	↳ Use the navigation button ▶ to move through the menu. ↳ Activate or deactivate the desired selection with the enter button ↵. ↳ First, the program is selected and confirmed. The *AUTO* or *ADJ* function is then activated or deactivated.

↳ Press the navigation button ▶ once.

⇨ The PROGRAM 1 LED flashes; program 1 is preselected.

⇨ Press the navigation button several times to preselect the desired program.

↳ Press the enter button ↵ to activate the desired program.

↳ Press the navigation button ▶ repeatedly until the AUTO LED flashes.

↳ Press the enter button ↵ to activate the *AUTO* function.

↳ Align the positioning sensor so that all four feedback LEDs permanently illuminate green.

	NOTICE
	The feedback LEDs signal the X/Y distance to the marker by means of the flashing frequency: ↳ Slow flashing: Large distance ↳ Fast flashing: Short distance ↳ Continuous illumination: Positioning sensor is optimally aligned

↳ If all four feedback LEDs illuminate green continuously, press the enter button ↵ once.

⇨ The positioning sensor is optimally aligned.

⇨ The exposure time and the marker diameter are taught.

⇨ The position is taught if the entire region of interest is still in the field of view after teaching-in.

	NOTICE
	All values are accepted only if it was possible to teach-in the position.

8.4 Setting the communication parameters

With the communication parameters, you determine how data is exchanged between device and host system, monitor PCs etc.

8.4.1 Manually setting the IP address

Set the IP manually if your system does not include a DHCP server or if the IP addresses of the devices are to be set permanently.

Factory settings for the network address of the IPS 200i positioning sensors:

- IP address: 192.168.060.101
- Subnet mask: 255.255.255.0

Setting the IP address via PC/laptop

Set the network address on the PC (example for Windows7).

- Log in as administrator.
- Select *Start* > *System control* > *Network and Internet* > *Network and Sharing Center*.
  - ⇨ Select *LAN connection* and double-click to open the *Properties* dialog.
- Select *Internet Protocol Version 4 (TCP/IPv4)* and click on the [Properties] button.
- Set the *IP address* of the PC.
  - ⇨ The IP address of the PC must not be identical to the IP address of the sensor.
  - ⇨ Example: IP address of the sensor: 192.168.060.101
    IP address of the PC: 192.168.060.110
- Set the subnet mask of the PC to the same value as on the sensor.
  - ⇨ Example: 255.255.255.0
- Confirm all of the settings dialogs with [OK] or [Close].
- Connect the Ethernet interface of the device directly to the LAN port of the PC.
- Start the webConfig tool using your PC's Internet browser with IP address **192.168.060.101**.
- In the webConfig tool, change the IP address to the IP address of the system:
  Configuration > Control > Ethernet IPS

	NOTICE
!	**The device cannot be accessed if the IP address is incorrect!** Make certain that the correct IP address is entered. The device can otherwise no longer be accessed.

Setting the IP address with Device-Finder

- Download the program *Device-Finder* from the Internet to the PC.
  - ⇨ Call up the Leuze home page: **www.leuze.com**.
  - ⇨ Enter the type designation or part number of the device as the search term.
  - ⇨ The program *Device-Finder* can be found on the product page for the device under the *Downloads* tab.
- Connect the Ethernet interface of the device directly to the LAN port of the PC.
- Start the program *Device-Finder*.
  - ⇨ The program displays all sensors of the IPS 200i series that are available in the network.
- Select the IPS 2xxi sensor from the list.
  - ⇨ You can now change the IP address of the sensor to the desired IP address.

8.4.2 Automatically setting the IP address

Set the IP address automatically if a DHCP server assigns the IP addresses in the system.

- Select the option to obtain the IP address automatically in the webConfig tool:
  Configuration > Control > Ethernet DCR > DHCP
- Use the configuration code to obtain the IP address automatically (see chapter 17.2 "Configuration via configuration codes").

8.4.3 Address Link Label

The "Address Link Label" is an additional stick-on label that is affixed to the device.

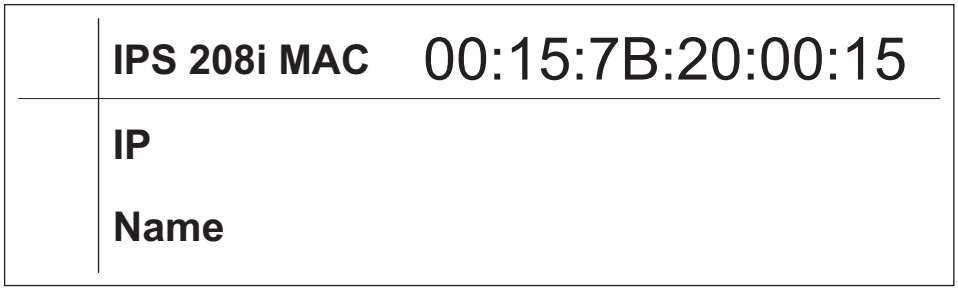

Fig. 8.1: Example of an "Address Link Label"; the device type varies depending on the series

- The "Address Link Label" contains the MAC address (Media Access Control address) of the device and makes it possible to enter the IP address and the device name manually.

  The area of the "Address Link Label" on which the MAC address is printed can be separated from the remainder of the stick-on label if necessary using the perforation.
- The "Address Link Label" can be removed from the device and affixed in the installation and layout diagrams to designate the device.
- Once it is affixed in the documents, the "Address Link Label" establishes a unique reference between the mounting location, the MAC address or the device, and the associated control program.

  There is no need for time-consuming searching, reading, and manually writing down of the MAC addresses of every device that is installed in the system.

	NOTICE
	Each device with Ethernet interface is uniquely identified via the MAC address assigned during production. The MAC address is also listed on the name plate of the device. If multiple devices are commissioned in a system, the MAC address of each installed device must be correctly assigned, e.g., during programming of the control.

8.4.4 Ethernet host communication

You can configure the connections to an external host system via the Ethernet host communication.

You can use both the UDP protocol as well as the TCP/IP protocol – in either client or in server mode. Both protocols can be activated simultaneously and used in parallel.

- The connection-free UDP protocol is used primarily to transfer process data to the host (monitor operation).
- The connection-oriented TCP/IP protocol can also be used to transfer commands from the host to the device. With this connection, the data is backed up by the TCP/IP protocol itself.
- If you would like to use the TCP/IP protocol, you must also define whether the device is to operate as a TCP client or as a TCP server.

UDP

The device requires from the user the IP address and the port number of the communication partner. In the same way, the host system (PC/control) also requires the set IP address of the device and the selected port number. By assigning these parameters, a socket is formed via which the data can be sent and received.

- Activate the UDP protocol.
- Set the following values:
  - IP address of the communication partner
  - Port number of the communication partner

The corresponding adjustment options can be found in the webConfig tool:
Configuration > Control > Host > Ethernet > UDP

TCP/IP

- Activate the TCP/IP protocol.
- Set the TCP/IP mode of the device.
  - In TCP client mode, the device actively establishes the connection to the superior host system, e.g., PC/control as server. The device requires from the user the IP address of the server (host system) and the port number on which the server (host system) accepts a connection. In this case, the device determines when and with whom a connection is established.
  - In TCP server mode, the superior host system (PC/control) actively establishes the connection and the connected device waits for the connection to be set up.
    The TCP/IP stack must be informed by the user as to the local port of the device (port number) on which connection requests from a client application (host system) are to be received.
    If there is a connection request and a connection is established by the superior host system (PC/control as client), the device – in server mode – accepts the connection. Data can then be sent and received.
- With a device as TCP client, set the following values:
  - IP address of the TCP server, normally the IP address of the control or the host computer
  - Port number of the TCP server
  - Timeout for the wait time for an answer from the server
  - Repetition time for renewed communication attempt following a timeout
- With a device as TCP server, set the following values:
  - Port number for the communication of the device with the TCP clients

The corresponding adjustment options can be found in the webConfig tool:
Configuration > Control > Host > Ethernet > TCP/IP

8.4.5 FTP client

To transfer images and log files, you can configure process data output via an FTP server.

- You can set the IP address and the port number of the FTP server with which communication is to occur.
- Assign user names and password settings or define the direction of communication using the *Passive mode* option.
  - When the *Passive mode* option is activated, the FTP client sets up an outgoing connection to the server.
- Activate the FTP client.
- Select which images (OK/NOK) are transferred. You can assign each one a name.

The corresponding adjustment options can be found in the webConfig tool:
Configuration > Control > Host > FTP client

	NOTICE
	You can set the time stamp via **Maintenance > System clock**. The system clock is reset if the operating voltage is interrupted.

8.5 Configuration via configuration codes

You can make configuration changes with the help of configuration codes (see chapter 17.2 "Configuration via configuration codes").

	NOTICE
	Configuration codes cannot be read via the *DCR configurator* app.

8.6 Activating device functions

You can activate the following device functions via the control buttons on the control panel:

- *AUTO*
- *ADJ*

↳ Connect the sensor to the voltage supply.

↳ Select the desired function via the control buttons on the control panel (see chapter 3.4.2 "Function selection and program selection").

AUTO

By activating the *AUTO* function, the following sequence is started:

1. Optimum image setting: The sensor determines the optimum illumination setting for the given scenario.
2. Determine marker: Automatic determination of the marker.
3. Feedback LEDs: Optical feedback for aligning the sensor.
4. Teach position: Automatic shifting of the region of interest to the coordinate origin of the marker (see chapter 8.6 "Activating device functions").

	NOTICE
	Only activate the *AUTO* function while at a standstill! ↳ Only activate the *AUTO* function if the marker is not moving relative to the device.

	NOTICE
	Deactivate the *AUTO* function! ↳ You must deactivate the *AUTO* function with the enter button ↵.

ADJ

Adjustment function for aligning the sensor.

- With activation of the alignment function, the four feedback LEDs signal the alignment of the sensor to the marker.
- By pressing the enter button ↵, the position is taught-in provided the entire region of interest fits in the sensor's field of view after shifting.

	NOTICE
	Deactivate the *ADJ* function! ↳ You must deactivate the *ADJ* function with the enter button ↵.

9 Commissioning – Leuze electronic webConfig tool

The positioning sensors of the IPS 200i series can be operated and configured via the Ethernet service interface with the integrated Leuze electronic webConfig tool.

With the webConfig tool, an operating-system independent, web-technology based, graphical user interface is available for configuring sensors.

Through the use of HTTP as communication protocol and the client-side restriction to standard technologies (HTML, JavaScript and AJAX), which are supported by all of today's popular, modern browsers, it is possible to operate the webConfig tool on any Internet-enabled PC.

	NOTICE
	The webConfig tool is offered in the following languages: German, English, French, Italian, Spanish Chinese and Korean

9.1 System requirements

To use the webConfig tool, you need a PC or laptop with the following specifications:

Tab. 9.1: System requirements for the webConfig tool

Monitor	Min. resolution: 1280 x 800 pixels or higher
Internet browser	Internet Explorer version 9.0 or higher Firefox version 30 or higher Chrome version 40 or higher

	NOTICE
	↳ Regularly update the operating system and the Internet browser. ↳ Install the current Windows Service Packs.

9.2 Start webConfig tool

✓ Prerequisite: IP address and subnet mask for the LAN connection with the device are set correctly.

↳ Connect the operating voltage to the device.

↳ Connect the HOST interface of the device to the PC. The connection to the HOST interface of the device is made via the LAN port of the PC.

↳ Start the webConfig tool via your PC's Internet browser with IP address **192.168.60.101** or with the IP address set by you.

⇨ **192.168.60.101** is the standard Leuze electronic IP address for communication with positioning sensors of the IPS 200i series.

The PC displays the webConfig start page with the current process information in the *Process* operating mode:

- Current image of the sensor
- Current results: X-value, Y-value, status, quality score
- Brief history of the last results
- States of the switching inputs/outputs

	NOTICE
	The process information may be displayed with a time delay depending on the current processing speed.

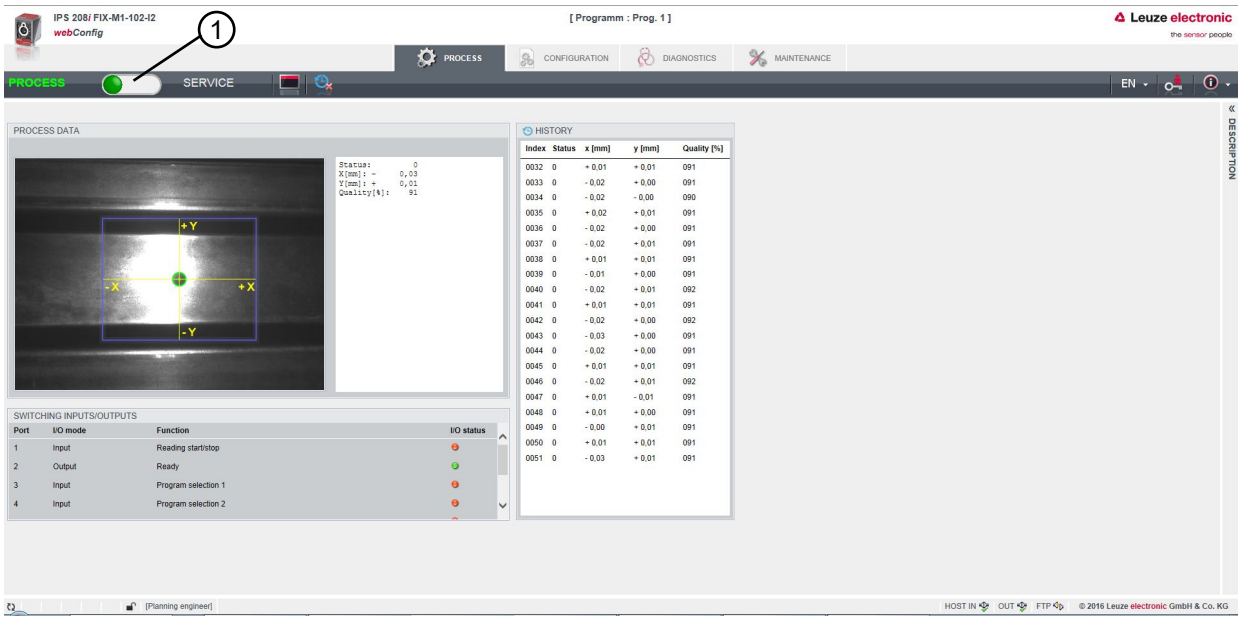

1 Changing the operating mode (*Process* - *Service*)

Fig. 9.1: The start page of the webConfig tool

The user interface of the webConfig tool is largely self-explanatory.

	NOTICE
	The webConfig tool is completely contained in the firmware of the device. The pages and functions of the webConfig tool may appear and be displayed differently depending on the firmware version.

Clear browser history

The cache of the Internet browser is to be cleared if different device types or devices with different firmware were connected to the webConfig tool.

↳ Delete cookies and temporary Internet and website data from browser history before starting the webConfig tool.

⇨ Example for Internet Explorer 10:
Settings > Security > Browser History > [Delete]

Note limit of Firefox sessions for version 17.0 and higher

If the limited number of Firefox sessions is exceeded, it may no longer be possible to address the device via the webConfig tool.

↳ Do **not** use the Internet browser's refresh function:
[Shift] [F5] or [Shift] + mouse click

9.3 Short description of the webConfig tool

The menus and dialog boxes of the webConfig tool are intuitive to operate and provide texts and tool tips.

The start page of the webConfig tool displays the current process information.

9.3.1 Change operating mode

For configurations with the webConfig tool, you can switch between the following operating modes:

- *Process*

  The device is connected to the control or to the PC.
  - The process communication to the control is activated.
  - The switching inputs/outputs are activated.
  - The image currently recorded by the sensor is displayed if the function was not deactivated in the webConfig tool.
  - The configuration cannot be changed.
- *Service*
  - Process communication to the control or to the PC has been interrupted.
  - The switching inputs/outputs are deactivated.
  - The configuration can be changed.

NOTICE

Configuration changes only in the *Service* operating mode!

↳ Changes made using the *CONFIGURATION* function can only be performed in the *Service* operating mode.

Located in the upper left of all pages of the webConfig tool is a software switch for changing the operating mode (*Process* - *Service*).

After changing to the *Service* operating mode, the **CONFIGURATION** menu is displayed.

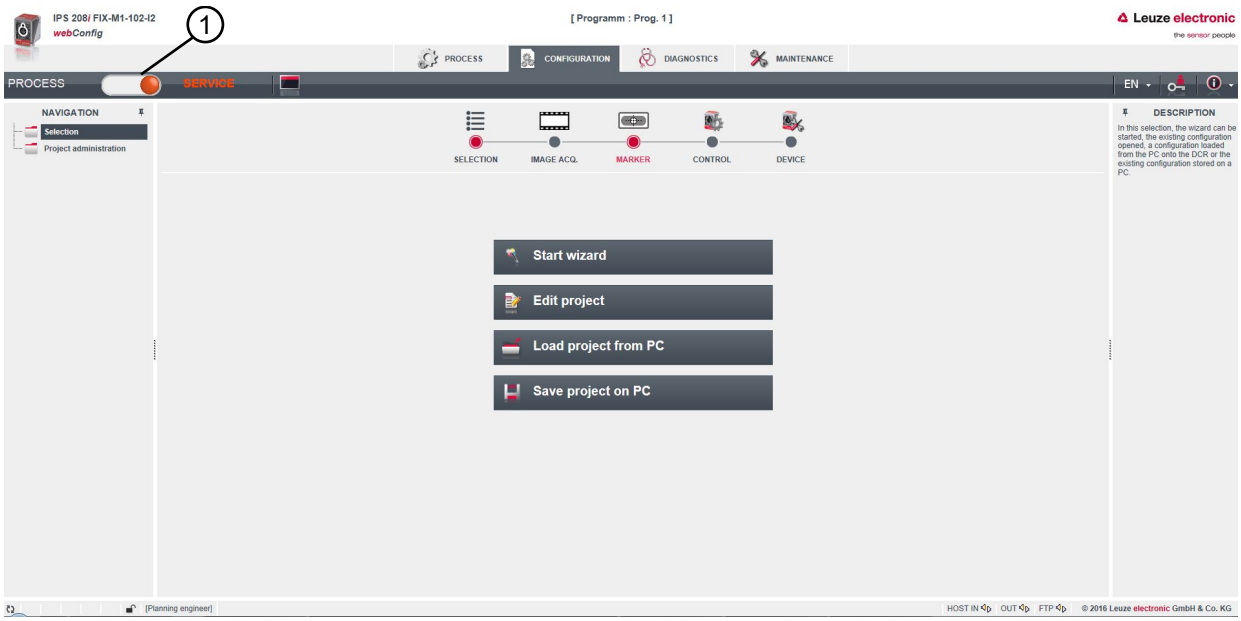

1 Changing the operating mode (*Process* - *Service*)

Fig. 9.2: **CONFIGURATION** menu of the webConfig tool

9.3.2 Menu options of the webConfig tool

The webConfig tool offers the following menu functions:

- **PROCESS**
  - Information on the current result
  - Current camera image
  - Status of the switching inputs/outputs
  - Reading statistics
- **CONFIGURATION**
  - Setting the application
  - Configuring data formatting and data output
  - Configuring the switching inputs/outputs
  - Configuring communication parameters and interfaces
  - General device settings, e.g. device names
- **DIAGNOSTICS**
  - Event logging of warnings and errors
- **MAINTENANCE**
  - Assigning user roles (user management)
  - Backup/restore the configuration file
  - Update firmware
  - Setting system time (system clock)
  - Managing user guidance

9.3.3 CONFIGURATION menu

NOTICE

Configuration changes only in the *Service* operating mode!

↳ Changes made using the **CONFIGURATION** menu can only be performed in the *Service* operating mode.

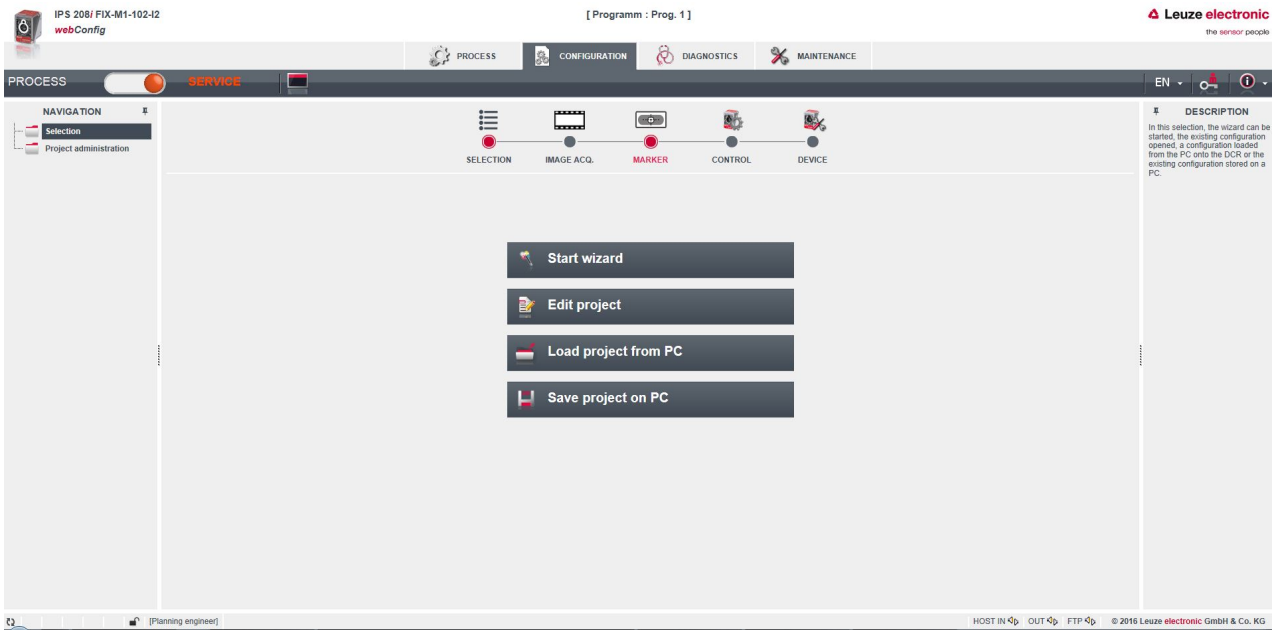

Fig. 9.3: **CONFIGURATION** menu

↳ Select the application that you would like to configure.

- [Start wizard]: Quick configuration in just a few steps
- [Edit project]: Configuration via the full view of the webConfig tool
- [Load project from PC]: Configuration via an existing configuration project
- [Save project on PC]: Save configuration project

9.3.4 Configuring applications with the wizard

With the configuration wizard, you can set up your application in just a few steps.

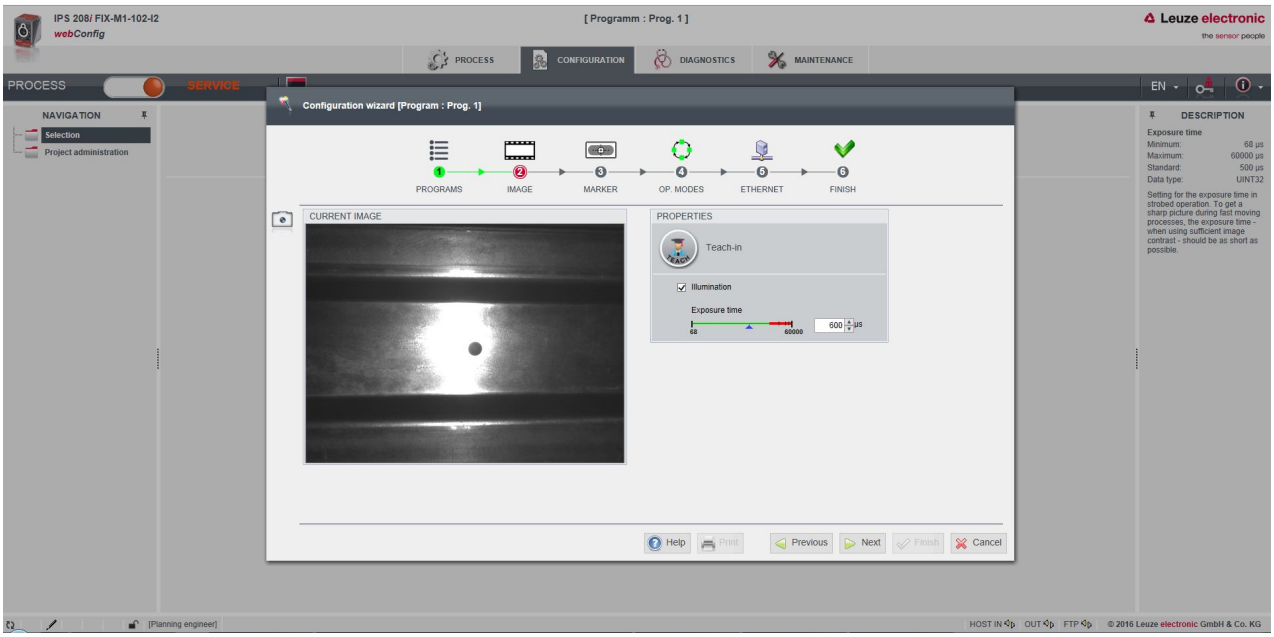

Fig. 9.4: Configuration wizard

↳ Select **CONFIGURATION >** [Start Wizard].

↳ Make the settings using the configuration steps presented by the wizard.

	NOTICE
	The settings are not saved until the final configuration step (FINISH) is performed.

9.4 Configuring compartment fine positioning

For faster commissioning, you can set the most important parameters for the programs (PROGRAM 1 … 4) using the configuration wizard. Alternatively, you can perform the configuration settings for compartment fine positioning manually.

9.4.1 Selecting the program

A total of four programs are available; these can be configured individually.

- Select **CONFIGURATION > PROGRAM ADMINISTRATION**.
  - ⇨ The *Program overview* dialog is displayed.

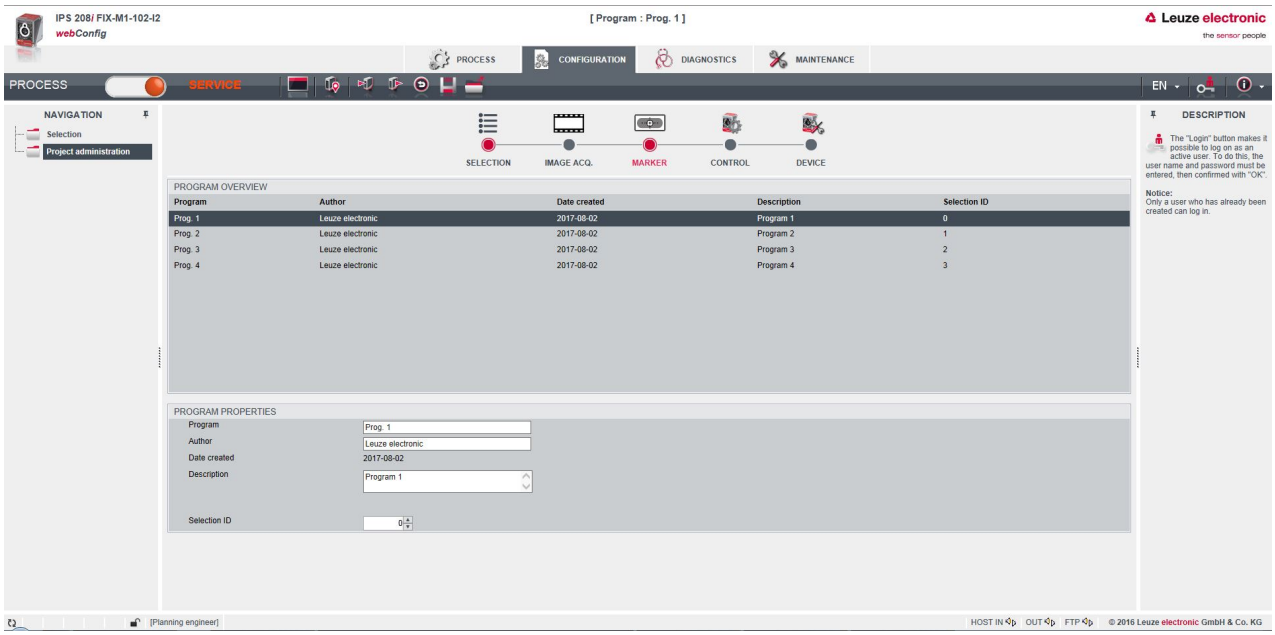

Fig. 9.5: *Program overview* dialog

- Select the program that you want to activate.

Tab. 9.2: Overview of the digital inputs for programs

Digital input SWI4	Digital input SWI3	Selection ID	Program name
0	0	0	PROGRAM 1
0	1	1	PROGRAM 2
1	0	2	PROGRAM 3
1	1	3	PROGRAM 4

9.4.2 Configuring image acquisition

- Select **CONFIGURATION > PROGRAM ADMINISTRATION**.
- Select the active program.
- Select **CONFIGURATION > Image acquisition**.
  - ⇨ The *Image acquisition* dialog is displayed.

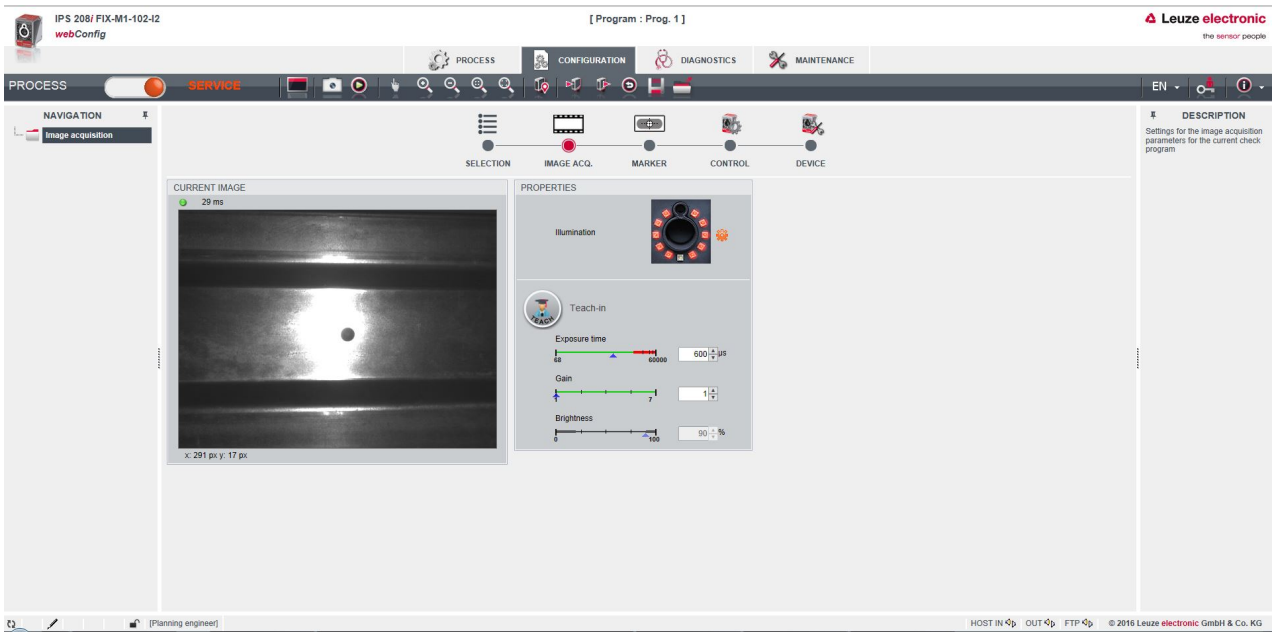

Fig. 9.6: Image acquisition

9.4.3 Configuring markers

Configuration of the current marker in the application.

- Select **CONFIGURATION > PROGRAM ADMINISTRATION**.
- Select the active program.
- Select **CONFIGURATION > Marker**.
  - ⇨ The *Marker* dialog is displayed.

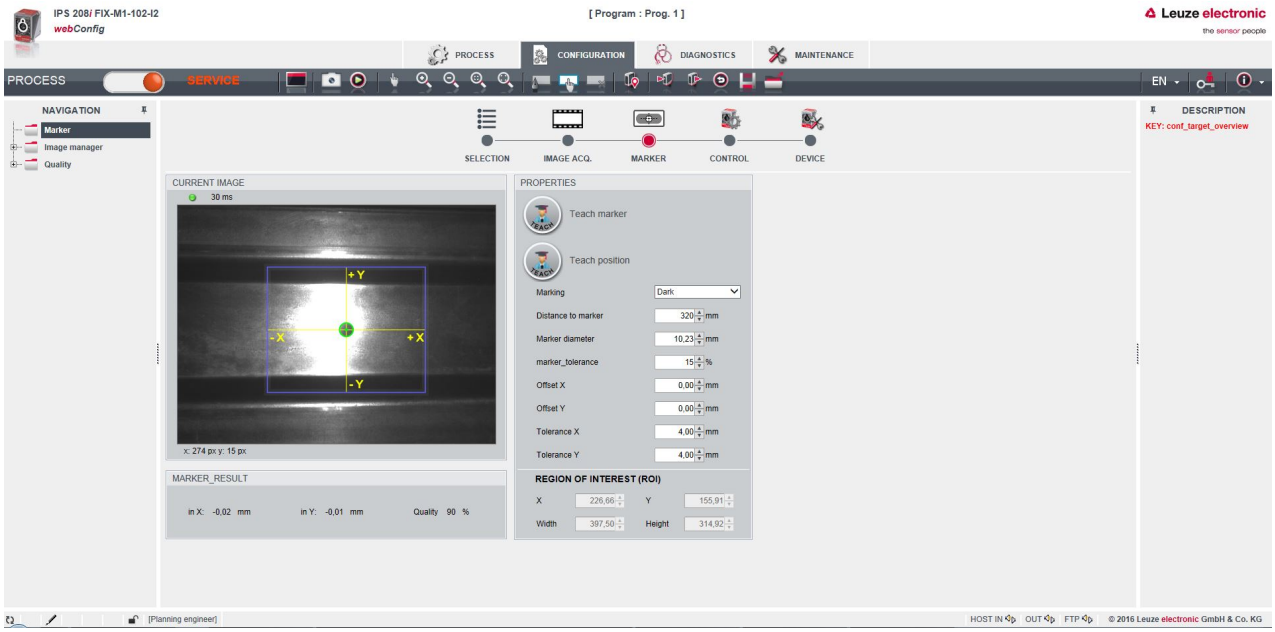

Fig. 9.7: Configuring markers

NOTICE	
!	**Set the working distance!** ↳ Set the actual working distance of the sensor before you press the [Teach marker] button. ↳ The marker (center point) must be located within the sensor's region of interest (blue frame).

9.4.4 Assigning measurement values to digital switching outputs

Program-specific assignment of measurement values to the programmable digital switching outputs.

↳ Select the active program.

↳ Select **CONFIGURATION > CONTROL > Digital IOs**.

⇨ The *Digital IOs* dialog is displayed.

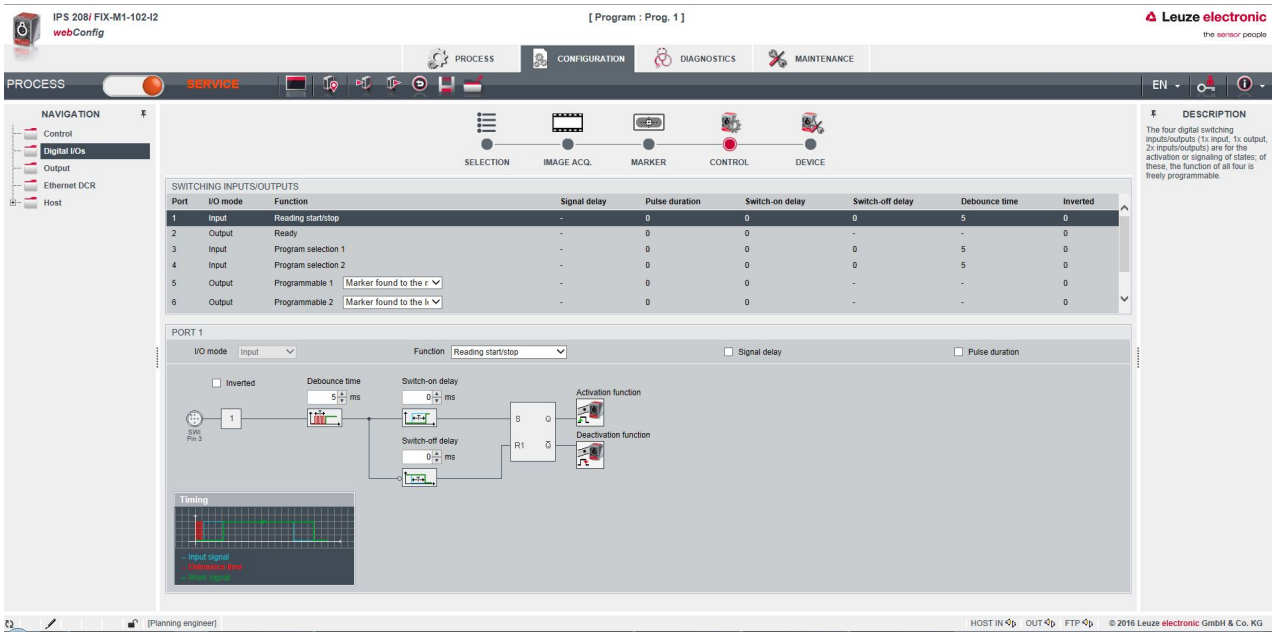

Fig. 9.8: Digital IOs

- The sensor makes the -X, +X, -Y, +Y digital switching outputs available.
- The nominal position is located within a rectangular tolerance range.
- Depending on the X deviations and Y deviations, the switching outputs are switched as follows.
  - IO5=-X
  - IO6=+X
  - IO7=+Y
  - IO8=-Y

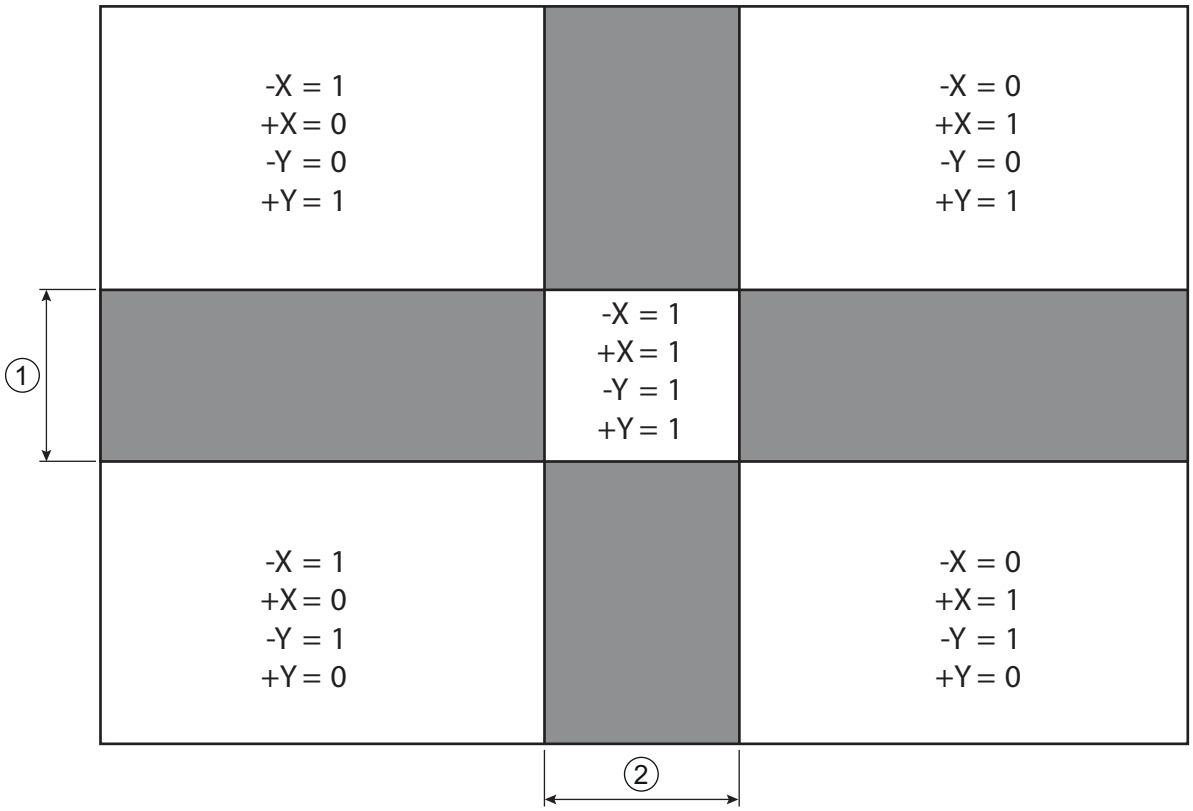

1 Tolerance range Y
2 Tolerance range X

Fig. 9.9: Viewing direction: Towards the marker

9.4.5 Outputting measurement values via Ethernet

Configuration of the measurement value output via the Ethernet interface.

The output of measurement values can be individually configured.

- Select the active program.
- Select **CONFIGURATION > CONTROL > Output**.
  - The *Output* dialog is displayed.

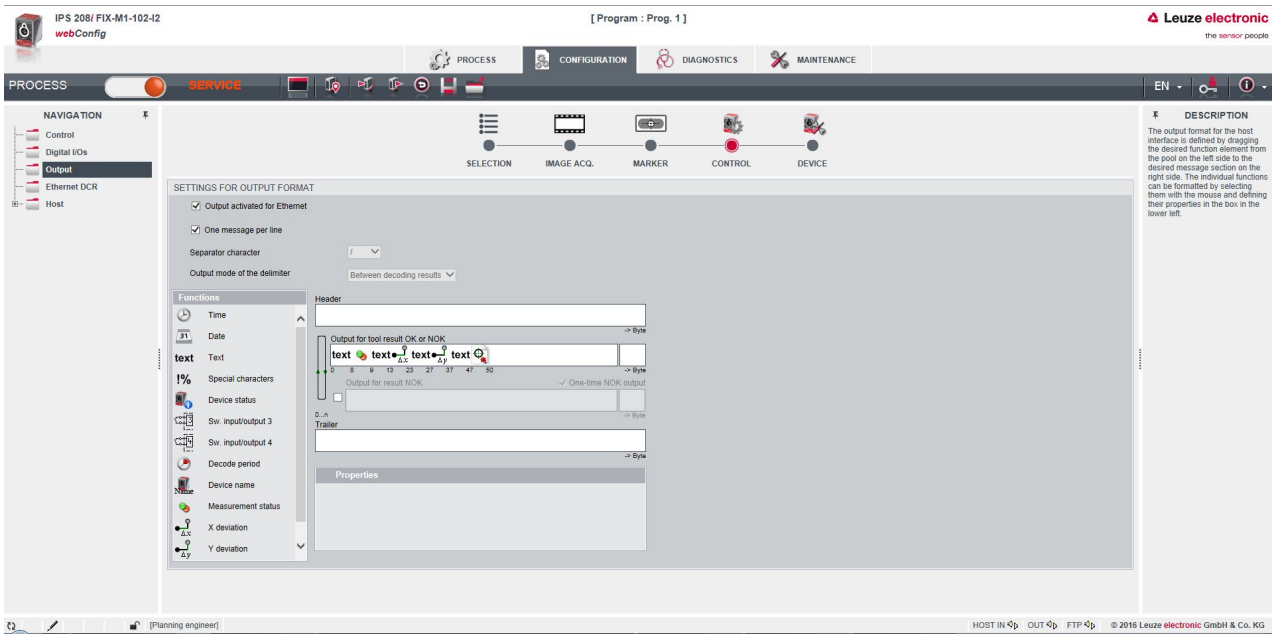

Fig. 9.10: Measurement value output

10 Interfaces – Communication

Commands can be used to send commands directly to the positioning sensor for control and configuration. The following transmission options are available for the commands:

- Online commands via the Ethernet interface (see chapter 10.1 "Online commands")
- XML-based communication via the Ethernet interface (see chapter 10.2 "XML-based communication")

10.1 Online commands

10.1.1 Overview of commands and parameters

Online commands can be used to send commands directly to the sensor for control and configuration. For this, the sensor must be connected to a computer (host) via the Ethernet interface (see chapter 8.4.4 "Ethernet host communication").

Online commands offer the following options for controlling and configuring the sensor:

- Control/activate sensor
- Read/write/copy parameters
- Carry out an automatic configuration
- Call up error messages
- Query statistical device information
- Perform a software RESET and re-initialize the sensor

Syntax

Online commands consist of one or two ASCII characters followed by command parameters.

No separation characters may be entered between the command and the command parameter(s). Both small and capitalized letters can be used.

Example:

Command ’**CA**’:	Auto setup function
Parameter ’**+**’:	Activation
Transmitted is:	’**CA+**’

Notation

Commands, parameters and returned data are enclosed between single quotation marks ’ ’ in the text of this manual.

Most online commands are acknowledged by the device and any requested data returned. For commands that are not acknowledged, command execution can be observed or monitored directly on the device.

10.1.2 General online commands

Software version number

Command	**’V’**
Description	Requests device version information
Parameter	None
Acknowledgment	Example: **’IPS 208i FIX-M3-102-I3 V2.2.0 2017-10-01’** The first line contains the device type of the sensor, followed by the device version number and version date. The data which is actually displayed may vary from the values given here.

	NOTICE
	You can use this command to check whether the communication between PC and sensor is functional. ↳ If you do not receive an acknowledgment, please check the interface connections or the protocol.

Software reset

Command	’H’		
Description	Carries out a software reset. The device is restarted and reinitialized, leaving it in the same state as when the operating voltage is switched on.		
Parameter	None		
Acknowledgment	’S’ (start signal)		

Auto-setup

Command	’CA’		
Description	Activates the *Auto setup* function: • Determine optimum illumination settings. • Determine marker. • Teach position, if possible. This function must again be deactivated!		
Parameter	’+’	Activates *Auto setup*	
	’-’	Deactivates *Auto setup*	
Acknowledgment	’CS=x’		
	x	Status	
		’00’	Valid **’CA’** command
		’01’	Invalid command
		’02’	‘Auto setup' could not be activated
Answer	’x yyyy zzz’		
	x	Status of the current detection	
		’0’	Detection successful; marker detected
		’1’	Detection not successful; multiple markers detected
		’2’	Detection not successful; no marker detected
	yyyy		Position values for X and Y deviation
	zzz		Quality score in [%]

Alignment mode

Command	’JP’	
Description	Activates or deactivates the alignment mode for simple mounting alignment of the device. After activating the function with **JP+**, the sensor constantly outputs status information on the Ethernet interface. Using online commands, the sensor is set so that it constantly outputs the position values, the status and the quality score. Upon deactivation of this mode, the position is re-taught, provided this is possible. This function must again be deactivated!	
Parameter	’+’	activates the alignment mode
	’-’	deactivates the alignment mode

Command	’JP’		
Answer	’x yyyy zzz’		
	x	Status of the current detection	
		’0’	Detection successful; marker detected
		’1’	Detection not successful; multiple markers detected
		’2’	Detection not successful; no marker detected
	yyyy	Position values for X and Y deviation	
	zzz	Quality score in [%]	

Device status

Command	’SST?’		
Description	The command queries the device status. If the command is sent via the host interface (Ethernet), acknowledgment is only given in the *Process* operating mode. The host interface is blocked in the *Service* operating mode.		
Parameter	None		
Acknowledgment	’SST=xxxxxxxx’ **x** stands for a single bit (value ’1’ or ’0’) Bit 7 is at the far left, bit 0 is at the far right		
	0	Ready	
		’1’	The sensor is ready to receive a trigger and start a program.
		’0’	The sensor does not respond to an incoming trigger signal.
	1	Operating mode	
		’1’	*Process* operating mode
		’0’	*Service* operating mode
	2	Device error	
		’1’	Device error, no inspection possible
		’0’	No device error, ready
	3 … 7	No function, value is always ’0’	
	Alternatively, the following acknowledgment is output: ’DS=xx’		
	x	Error acknowledgment	
		’00’	Syntax error
		’01’	Other error

Program query

Command	’GAI?’
Description	The command queries the currently active program.
Acknowledgment	**’GAI=<bbb>‘** The ID of the currently active program is sent as the answer, e.g., 'GAI=0'.

Program changeover

Command	**’GAI=<xxx>’**		
Description	The command activates changeover to the desired program.		
Parameter	’**xxx**’ The program number (ID) must be entered as a 3-digit number, e.g., '001'.		
Acknowledgment	’**GS=<bb>**’		
	bb	The following values are defined	
		’00’	Positive answer
		’01’	Syntax Error
		’02’	Wrong parameter
		’03’	Wrong operating mode
		’04’	Other error

10.1.3 Online commands for system control

Activate positioning

Command	**’+’**
Description	The command activates configured positioning.
Parameter	None
Acknowledgment	None

Deactivate positioning

Command	**’-’**
Description	The command deactivates configured positioning.
Parameter	None
Acknowledgment	None

10.2 XML-based communication

You can send commands for control and configuration directly to the device via XML-based communication.

- The device must be connected to a computer (host) via the Ethernet interface (see chapter 8.4.4 "Ethernet host communication").
- The device is designed as an XML server and communicates on port 10004.

You can find detailed information on XML-based communication on the Leuze home page:
www.leuze.com

- Enter the type designation or part number of the device as the search term.
- You can find the information on the *Downloads* tab.

11 Care, maintenance and disposal

Usually, the device does not require any maintenance by the operator.

Cleaning

Clean the lens cover of the device with a soft cloth before mounting.

	NOTICE
!	**Do not use aggressive cleaning agents!** ↳ Do not use aggressive cleaning agents such as thinner or acetone for cleaning the device.

Maintenance

Repairs to the device must only be carried out by the manufacturer.

↳ For repairs, contact your responsible Leuze electronic subsidiary or Leuze electronic customer service (see chapter 13 "Service and support").

Disposing

↳ For disposal observe the applicable national regulations regarding electronic components.

12 Diagnostics and troubleshooting

Error signaling via LED

Tab. 12.1: Meaning of the LED indicators

Error	Possible error cause	Measures
PWR LED		
Off	• No operating voltage connected to the device • Hardware error	• Check operating voltage • Contact Leuze electronic customer service (see chapter 13 "Service and support")
Red, continuous light	Device error/parameter enable	Contact Leuze electronic customer service (see chapter 13 "Service and support")
Red, flashing	Warning set Temporary operating fault	Query diagnostic data and carry out the resulting measures
NET LED		
Off	No operating voltage connected to the device	• Check operating voltage • Contact Leuze electronic customer service (see chapter 13 "Service and support")
Red, continuous light	Network error No communication established to the IO controller	Check interface
Red, flashing	No communication Parameterization or configuration failed	Check interface

13 Service and support

24-hour on-call service at:

+49 (0) 7021 573 - 0

Service hotline:

+49 (0) 7021 573 - 123

Monday to Friday 8.00 a.m. to 5.00 p.m. (UTC+1)

E-mail:

service.identify@leuze.de

Repair service and returns:

Procedure and Internet form can be found at

www.leuze.com/repair

Return address for repairs:

Service center

Leuze electronic GmbH + Co. KG

In der Braike 1

D-73277 Owen / Germany

13.1 What to do should servicing be required?

NOTICE

Please use this chapter as a master copy should servicing be required!

↳ Enter the contact information and fax this form together with your service order to the fax number given below.

Customer data (please complete)

Device type:	
Serial number:	
Firmware:	
Status of LEDs:	
Error description:	
Company:	
Contact person/department:	
Phone (direct dial):	
Fax:	
Street/No:	
ZIP code/City:	
Country:	

Leuze Service fax number:

+49 7021 573 - 199

14 Technical data

14.1 General specifications

Tab. 14.1: Electrical equipment

Operating voltage U_B	18 V … 30 V DC PELV, Class 2 / SELV
Average power consumption	8 W without load on the switching output During strobed operation, a higher power can briefly be consumed.
Switching input Switching output	• SWI1: Digital switching input 1 (default: "Trigger") • SWO2: Digital switching output 2 (default: "Ready") • SWI3: Digital switching input 3 (default: "Program selection 0") • SWI4: Digital switching input 4 (default: "Program selection 1") • SWO5 … SWO8: digital switching outputs 5 … 8 (default: Position output) 18 V … 30 V DC, depending on operating voltage I_{max}: 60 mA per switching output; 100 mA total current Short-circuit proof, protected against polarity reversal
Process interface	Ethernet 10/100 Mbit/s

Tab. 14.2: Operating and display elements

Keyboard	2 control buttons
LEDs	1 dual LED (green/red) for power (PWR) 1 dual LED (green/red) for bus state (NET) 1 dual LED (green/yellow) for link state (LINK) Display with 6 LEDs (green) for function selection and program selection 4 feedback LEDs (green) for alignment indication

Tab. 14.3: Mechanical data

Degree of protection	IP65 acc. to EN 60529 With screwed-on M 12 connectors or mounted caps
VDE protection class	III (EN 61140)
Connection technology	M12 connectors
Weight	120 g (housing hood with plastic screen)
Dimensions (H x W x D)	65.6 x 43 x 44 mm
Fastening	2 M4 threaded inserts on each of the side walls, 5 mm deep 4 M4 threaded inserts on the rear, 3.5 mm / 5 mm deep
Housing	Housing: polycarbonate Housing base: diecast aluminum
Optics cover	Polycarbonate

Tab. 14.4: Environmental data

Ambient temp. (operation/storage)	0 °C … +50 °C/-20 °C … +70 °C
Air humidity	max. 90% rel. humidity, non-condensing
Ambient light	Max. 2000 Lux
Electromagnetic compatibility	EN 61000-6-2, EN 61000-6-4
Vibration	IEC 60068-2-6, test Fc
Continuous shock	IEC 60068-2-29, test Eb
Certifications	UL 60950-1 CAN/CSA C22.2 No. 60950-1-07 CSA C22.2 No. 60950-1-07
Conformity	CE, FCC, UL

14.2 Optical data

Tab. 14.5: Optical data

Integrated LED illumination	Infrared (not visible, 850 nm) Exempt group in acc. with IEC 60825-1, EN 62471:2008
Integrated feedback LEDs	Green (525 nm)
Beam exit	Front
Image sensor	Global shutter CMOS Imager
Number of pixels	1280 x 960 pixels (800 x 600 effective)
Electronic shutter speeds	68 µs … 5 ms (flash)

14.3 Reading performance

Tab. 14.6: Reading performance

Working distances	M-optics: • 100 mm … 200 mm with a marker diameter of 5 mm • 100 mm … 300 mm with a marker diameter of 10 mm • 100 mm … 450 mm with a marker diameter of 15 mm • 200 mm … 600 mm with a marker diameter of 20 mm
Reading distance	see chapter 6.1.3 "Determining the working distance"

14.4 Device with heating

Tab. 14.7: Electrical equipment

Operating voltage U_B	18 V … 30 V DC PELV, Class 2 / SELV
Average power consumption	12 W without load on the switching output During strobed operation, a higher power can briefly be consumed.
Warmup time	Minimum 30 minutes at +24 V DC and an ambient temperature of -30 °C

Tab. 14.8: Environmental data

Ambient temperature (operation)	-30 °C … +50 °C
Ambient temperature (storage)	-20 °C … +70 °C

14.5 Dimensioned drawings

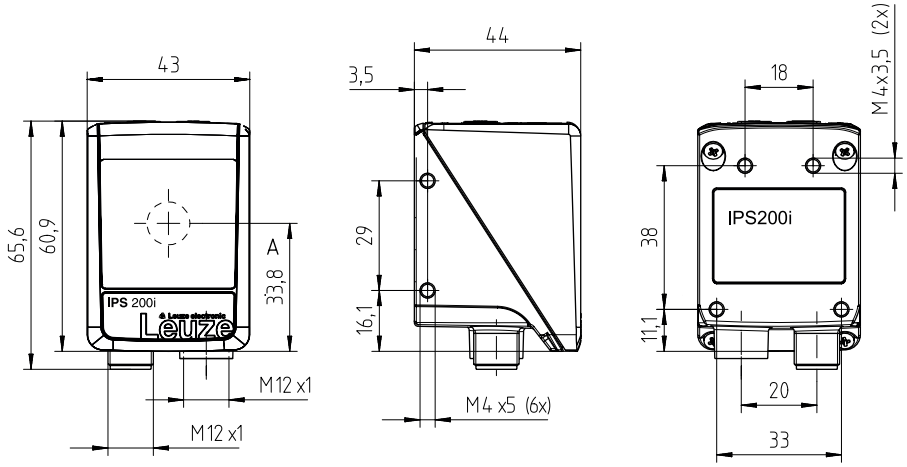

all dimensions in mm

A Optical axis

Fig. 14.1: IPS 200i dimensioned drawing

14.6 Dimensioned drawings - Accessories

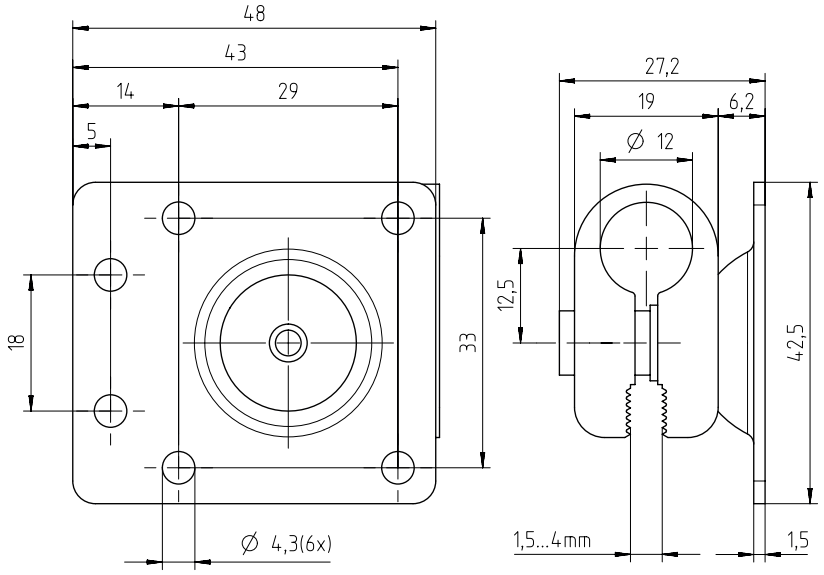

all dimensions in mm

Fig. 14.2: Dimensioned drawing of the BTU 320M-D12 mounting system

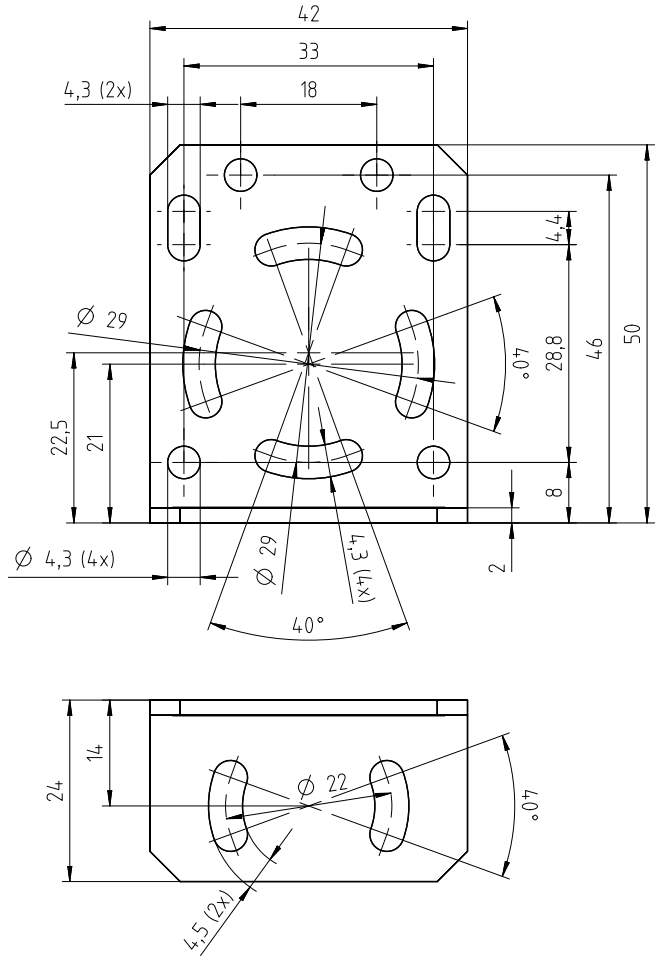

all dimensions in mm

Fig. 14.3: Dimensioned drawing of the BT 320M mounting bracket

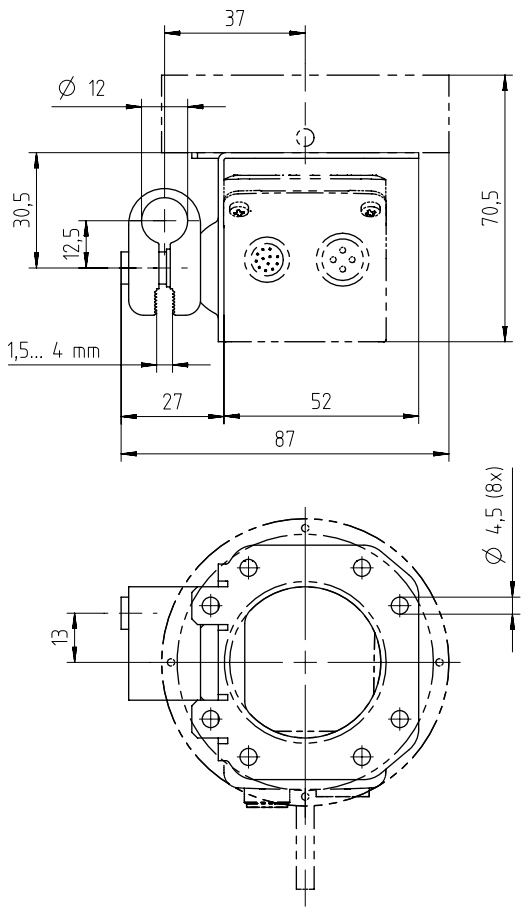

all dimensions in mm

Fig. 14.4: Dimensioned drawing of the BTU 320M-D12-RL70 mounting bracket for ring light

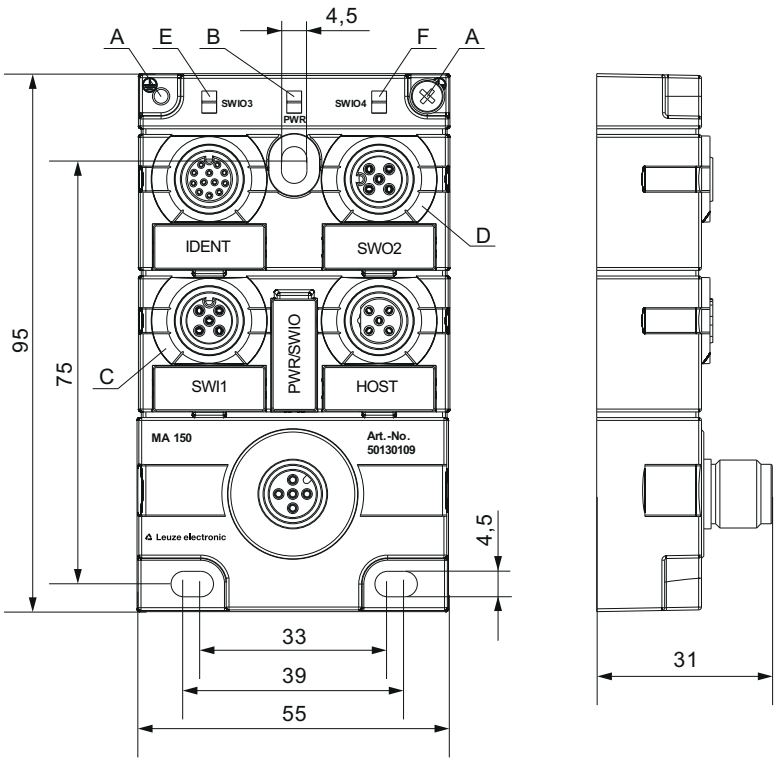

all dimensions in mm

A Earthing strap

B Green LED: PWR

C White LED: SWI1

D White LED: SWO2

E White LED: SWIO3

F White LED: SWIO4

Fig. 14.5: Dimensioned drawing of MA 150 connection unit

15 Order guide and accessories

15.1 Nomenclature

Part designation:

IPS 2xxi FIX-Of-102-Ir-Z-A

Tab. 15.1: Part number code

IPS	Operating principle: Imaging Positioning Sensor (camera-based)
2	Series: IPS 200
xx	Host interface 08: Ethernet TCP/IP
i	Integrated fieldbus technology
FIXED	Fixed focal length
O	Optics: M: Medium Density
f	Lens: 3: 4.1 mm
102	Device with connector/socket Beam exit at front
I	Illumination: infrared
r	Resolution range: 3: 1280 x 960 pixels
Z	Type of protective screen: -: Plastic G: Glass
A	Heating variant: -: without heating H: with heating

NOTICE

A list with all available device types can be found on the Leuze electronic website at **www.leuze.com**.

15.2 Type overview

Tab. 15.2: Type overview

Type designation	Description	Part no.
IPS 208i FIX-M3-102-I3	Camera-based positioning sensor, M3 optics	50135331
IPS 208i FIX-M3-102-I3-H	Camera-based positioning sensor, M3 optics, heating	50135334

15.3 Optical accessories

Tab. 15.3: Accessories – housing hoods

Part no.	Part designation	Description
50137680	Cover IPS 200i	Housing hood with plastic pane
50137681	Cover IPS 200i-G	Housing hood with glass pane

15.4 Cables accessories

Tab. 15.4: Accessories – PWR connection cable (open cable end)

Part no.	Part designation	Description
M12 socket (12-pin, A-coded), axial connector, open cable end, shielded, UL		
50130281	KD S-M12-CA-P1-020	PWR connection cable, length 2 m
50130282	KD S-M12-CA-P1-050	PWR connection cable, length 5 m
50130283	KD S-M12-CA-P1-100	PWR connection cable, length 10 m
M12 socket (12-pin, A-coded), angled connector, open cable end, shielded, UL		
50134943	KD S-M12-CW-P1-050	PWR connection cable, length 5 m

Tab. 15.5: Accessories – PWR connection cable (extension, to M12 plug)

Part no.	Part designation	Description
M12 socket (12-pin, A-coded), axial connector **M12 plug (12-pin, A-coded), shielded, UL**		
50130284	KDS S-M12-CA-M12-CA-P1-020	Connection cable, length 2 m
50130285	KDS S-M12-CA-M12-CA-P1-050	Connection cable, length 5 m
50130286	KDS S-M12-CA-M12-CA-P1-100	Connection cable, length 10 m

Tab. 15.6: Accessories – Ethernet connection cable (to RJ-45)

Part no.	Part designation	Description
M12 plug (4-pin, D-coded), axial connector to RJ-45 connector, shielded, UL		
50135080	KSS ET-M12-4A-RJ45-A-P7-020	Ethernet connection cable (on RJ-45), length 2 m
50135081	KSS ET-M12-4A-RJ45-A-P7-050	Ethernet connection cable (on RJ-45), length 5 m
50135082	KSS ET-M12-4A-RJ45-A-P7-100	Ethernet connection cable (on RJ-45), length 10 m
50135083	KSS ET-M12-4A-RJ45-A-P7-150	Ethernet connection cable (on RJ-45), length 15 m
50135084	KSS ET-M12-4A-RJ45-A-P7-300	Ethernet connection cable (on RJ-45), length 30 m

Tab. 15.7: Accessories – Ethernet connection cable (open cable end)

Part no.	Part designation	Description
M12 plug (4-pin, D-coded), axial connector, open cable end, shielded, UL		
50135073	KS ET-M12-4A-P7-020	Ethernet connection cable, length 2 m
50135074	KS ET-M12-4A-P7-050	Ethernet connection cable, length 5 m
50135075	KS ET-M12-4A-P7-100	Ethernet connection cable, length 10 m
50135076	KS ET-M12-4A-P7-150	Ethernet connection cable, length 15 m
50135077	KS ET-M12-4A-P7-300	Ethernet connection cable, length 30 m

Part no.	Part designation	Description
M12 plug (4-pin, D-coded), angled connector, open cable end, shielded, UL		
50134942	KS ET-M12-4W-P7-050	Ethernet connection cable, length 5 m

Tab. 15.8: Accessories – BUS IN/BUS OUT connection cable (to M12)

Part no.	Part designation	Description
M12 plug (4-pin, D-coded), BUS IN/BUS OUT to M12 socket, shielded, UL		
50106899	KB ET-2000-SSA	BUS OUT connection cable, length 2 m
50106900	KB ET-5000-SSA	BUS OUT connection cable, length 5 m
50106901	KB ET-10000-SSA	BUS OUT connection cable, length 10 m
50106902	KB ET-15000-SSA	BUS OUT connection cable, length 15 m
50106905	KB ET-30000-SSA	BUS OUT connection cable, length 30 m

15.5 Other accessories

Tab. 15.9: Accessories – reflectors

Part no.	Part designation	Description
50130343	MTKZ 13-30 SET	Reflector SET for 13 mm bore hole, set contains 100 pieces
50129092	MTKZ 15-30 SET	Reflector SET for 15 mm bore hole, set contains 100 pieces
50132911	REF 7-A-15-30 SET	Reflective tape SET for affixing, set contains 500 pieces

Tab. 15.10: Accessories – Mounting aids

Part no.	Part designation	Description
50132150	BTU 320M-D12	Mounting system for 12 mm rod
50132151	BT 320M	Mounting bracket
50132453	BTU 320M-D12-RL70	Mounting bracket for ring light

Tab. 15.11: Accessories – Modular connection unit

Part no.	Part designation	Description
50130109	MA 150	Modular connection unit for decentralized distribution of the signals in the high-bay storage device

Tab. 15.12: Accessories – Ethernet switch

Part no.	Part designation	Description
50135196	MD 708-21-42/D4-12	Ethernet switch with 5 connections
50135197	MD 708-21-82/D4-12	Ethernet switch with 9 connections

16 EC Declaration of Conformity

The positioning sensors of the IPS 200i series have been developed and manufactured in accordance with the applicable European standards and directives.

17 Appendix

17.1 ASCII character set

ASCII	Dec.	Hex.	Oct.	Designation	Meaning
NUL	0	00	0	ZERO	Zero
SOH	1	01	1	START OF HEADING	Start of heading
STX	2	02	2	START OF TEXT	Start of text characters
ETX	3	03	3	END OF TEXT	Last character of text
EOT	4	04	4	END OF TRANSMISS.	End of transmission
ENQ	5	05	5	ENQUIRY	Request for data trans.
ACK	6	06	6	ACKNOWLEDGE	Positive acknowledgment
BEL	7	07	7	BELL	Bell signal
BS	8	08	10	BACKSPACE	Backspace
HT	9	09	11	HORIZ. TABULATOR	Horizontal tabulator
LF	10	0A	12	LINE FEED	Line feed
VT	11	0B	13	VERT. TABULATOR	Vertical tabulator
FF	12	0C	14	FORM FEED	Form feed
CR	13	0D	15	CARRIAGE RETURN	Carriage return
SO	14	0E	16	SHIFT OUT	Shift out
SI	15	0F	17	SHIFT IN	Shift in
DLE	16	10	20	DATA LINK ESCAPE	Data link escape
DC1	17	11	21	DEVICE CONTROL 1	Device control character 1
DC2	18	12	22	DEVICE CONTROL 2	Device control character 2
DC3	19	13	23	DEVICE CONTROL 3	Device control character 3
DC4	20	14	24	DEVICE CONTROL 4	Device control character 4
NAK	21	15	25	NEG. ACKNOWLEDGE	Negative acknowledge
SYN	22	16	26	SYNCHRONOUS IDLE	Synchronization
ETB	23	17	27	EOF TRANSM. BLOCK	End of data transmission block
CAN	24	18	30	CANCEL	Invalid
EM	25	19	31	END OF MEDIUM	End of medium
SUB	26	1A	32	SUBSTITUTE	Substitution
ESC	27	1B	33	ESCAPE	Escape
FS	28	1C	34	FILE SEPARATOR	File separator
GS	29	1D	35	GROUP SEPARATOR	Group separator
RS	30	1E	36	RECORD SEPARATOR	Record separator
US	31	1F	37	UNIT SEPARATOR	Unit separator
SP	32	20	40	SPACE	Space
!	33	21	41	EXCLAMATION POINT	Exclamation point
"	34	22	42	QUOTATION MARK	Quotation mark
#	35	23	43	NUMBER SIGN	Number sign
$	36	24	44	DOLLAR SIGN	Dollar sign
%	37	25	45	PERCENT SIGN	Percent sign

ASCII	Dec.	Hex.	Oct.	Designation	Meaning
&	38	26	46	AMPERSAND	Ampersand
’	39	27	47	APOSTROPHE	Apostrophe
(	40	28	50	OPEN. PARENTHESIS	Open parenthesis
)	41	29	51	CLOS. PARENTHESIS	Closed parenthesis
*	42	2A	52	ASTERISK	Asterisk
+	43	2B	53	PLUS	Plus sign
,	44	2C	54	COMMA	Comma
-	45	2D	55	HYPHEN (MINUS)	Hyphen
.	46	2E	56	PERIOD (DECIMAL)	Period (decimal)
/	47	2F	57	SLANT	Slant
0	48	30	60	0	Number
1	49	31	61	1	Number
2	50	32	62	2	Number
3	51	33	63	3	Number
4	52	34	64	4	Number
5	53	35	65	5	Number
6	54	36	66	6	Number
7	55	37	67	7	Number
8	56	38	70	8	Number
9	57	39	71	9	Number
:	58	3A	72	COLON	Colon
;	59	3B	73	SEMICOLON	Semicolon
<	60	3C	74	LESS THAN	Less than
=	61	3D	75	EQUALS	Equals
>	62	3E	76	GREATER THAN	Greater than
?	63	3F	77	QUESTION MARK	Question mark
@	64	40	100	COMMERCIAL AT	Commercial AT
A	65	41	101	A	Capital letter
B	66	42	102	B	Capital letter
C	67	43	103	C	Capital letter
D	68	44	104	D	Capital letter
E	69	45	105	E	Capital letter
F	70	46	106	F	Capital letter
G	71	47	107	G	Capital letter
H	72	48	110	H	Capital letter
I	73	49	111	I	Capital letter
J	74	4A	112	J	Capital letter
K	75	4B	113	K	Capital letter
L	76	4C	114	L	Capital letter
M	77	4D	115	M	Capital letter

ASCII	Dec.	Hex.	Oct.	Designation	Meaning
N	78	4E	116	N	Capital letter
O	79	4F	117	O	Capital letter
P	80	50	120	P	Capital letter
Q	81	51	121	Q	Capital letter
R	82	52	122	R	Capital letter
S	83	53	123	S	Capital letter
T	84	54	124	T	Capital letter
U	85	55	125	U	Capital letter
V	86	56	126	V	Capital letter
W	87	57	127	W	Capital letter
X	88	58	130	X	Capital letter
Y	89	59	131	Y	Capital letter
Z	90	5A	132	Z	Capital letter
[	91	5B	133	OPENING BRACKET	Opening bracket
\	92	5C	134	REVERSE SLANT	Reverse slant
]	93	5D	135	CLOSING BRACKET	Closing bracket
^	94	5E	136	CIRCUMFLEX	Circumflex
_	95	5F	137	UNDERSCORE	Underscore
`	96	60	140	GRAVE ACCENT	Grave accent
a	97	61	141	a	Lower case letter
b	98	62	142	b	Lower case letter
c	99	63	143	c	Lower case letter
d	100	64	144	d	Lower case letter
e	101	65	145	e	Lower case letter
f	102	66	146	f	Lower case letter
g	103	67	147	g	Lower case letter
h	104	68	150	h	Lower case letter
i	105	69	151	i	Lower case letter
j	106	6A	152	j	Lower case letter
k	107	6B	153	k	Lower case letter
l	108	6C	154	l	Lower case letter
m	109	6D	155	m	Lower case letter
n	110	6E	156	n	Lower case letter
o	111	6F	157	o	Lower case letter
p	112	70	160	p	Lower case letter
q	113	71	161	q	Lower case letter
r	114	72	162	r	Lower case letter
s	115	73	163	s	Lower case letter
t	116	74	164	t	Lower case letter
u	117	75	165	u	Lower case letter

ASCII	Dec.	Hex.	Oct.	Designation	Meaning
v	118	76	166	v	Lower case letter
w	119	77	167	w	Lower case letter
x	120	78	170	x	Lower case letter
y	121	79	171	y	Lower case letter
z	122	7A	172	z	Lower case letter
{	123	7B	173	OPENING BRACE	Opening brace
|	124	7C	174	VERTICAL LINE	Vertical line
}	125	7D	175	CLOSING BRACE	Closing brace
~	126	7E	176	TILDE	Tilde
DEL	127	7F	177	DELETE (RUBOUT)	Delete

17.2 Configuration via configuration codes

The positioning sensor can also be configured using configuration codes. The device parameters in the device are set and permanently saved after reading this code.

Configuration changes via the configuration codes are only possible via button activation on the control panel of the sensor (*AUTO* function).

Proceed as follows to read in a configuration code:

- Connect the sensor to the operating voltage and activate the *AUTO* function on the control panel.
- Hold the printed configuration code at the correct distance in front of the optics of the sensor.

NOTICE

Read in configuration codes individually!

The printed configuration codes can only be read in individually.

NOTICE

Configuration codes cannot be read via the *DCR configurator* app.

Reset to factory settings (without IP address)

Fig. 17.1: Configuration code: reset to factory settings

Setting the IP address to the Leuze default address

Fig. 17.2: Configuration code: Setting the IP address

DHCP activation

Fig. 17.3: Configuration code: DHCP activation

DHCP deactivation

Fig. 17.4: Configuration code: DHCP deactivation

Activation of reading gate control

Fig. 17.5: Configuration code: Reading gate control activation

Activation of single trigger mode

Fig. 17.6: Configuration code: Single trigger mode activation

17.3 License terms

This product contains software components that are licensed by the copyright holders as "free software" or as "open source software" under the GNU General Public License, Version 2. We can provide you with the source code of these software components on a data carrier/download (CD-ROM or DVD) if you submit a request to our customer support within three years of distribution of the product at the following address:

Service center

Leuze electronic GmbH + Co. KG

In der Braike 1

D-73277 Owen / Germany

Source code DCR 200i