Leuze electronic

the sensor people

BCL504i
Barcode reader

TECHNICAL DESCRIPTION

GB 02-09/08 50108327

ПРОМЭЛЕКТРОНИКА / sales@prom-elec.com

Leuze electronic

Leuze electronic GmbH + Co. KG
P.O. Box 1111, D-73277 Owen / Teck
Tel. +49(0)7021/573-0,
Fax +49(0)7021/573-199
info@leuze.de • www.leuze.com

Sales and Service

Germany

Sales Region North
Phone 07021/573-306
Fax 07021/9850950

Postal code areas
20000-38999
40000-65999
97000-97999

Sales Region South
Phone 07021/573-307
Fax 07021/9850911

Postal code areas
66000-96999

Sales Region East
Phone 035027/629-106
Fax 035027/629-107

Postal code areas
01000-19999
39000-39999
98000-99999

Worldwide

AR (Argentina)
Nortécnica S. R. L.
Tel. Int. + 54 1147 57-3129
Fax Int. + 54 1147 57-1088

AT (Austria)
Schmachtl GmbH
Tel. Int. + 43 732 76460
Fax Int. + 43 732 785036

AU + NZ (Australia + New Zealand)
Balluff-Leuze Pty. Ltd.
Tel. Int. + 61 3 9720 4100
Fax Int. + 61 3 9738 2677

BE (Belgium)
Leuze electronic nv/sa
Tel. Int. + 32 2253 16-00
Fax Int. + 32 2253 15-36

BG (Republic of Bulgaria)
ATICS
Tel. Int. + 359 2 847 6244
Fax Int. + 359 2 847 6244

BR (Brasil)
Leuze electronic Ltda.
Tel. Int. + 55 11 5180-6130
Fax Int. + 55 11 5181-3597

BY (Republic of Belarus)
Logoprom ODO
Tel. Int. + 375 017 235 2641
Fax Int. + 375 017 230 8614

CH (Switzerland)
Leuze electronic AG
Tel. Int. + 41 44 834 02-04
Fax Int. + 41 44 833 26-26

CL (Chile)
Imp. Tec. Vignola S.A.I.C.
Tel. Int. + 56 3235 11-11
Fax Int. + 56 3235 11-28

CN (People's Republic of China)
Leuze electronic Trading
(Shenzhen) Co. Ltd.
Tel. Int. + 86 755 862 64909
Fax Int. + 86 755 862 64901

CO (Colombia)
Componentes Electronicas Ltda.
Tel. Int. + 57 4 3511049
Fax Int. + 57 4 3511019

CZ (Czech Republic)
Schmachtl CZ s.r.o.
Tel. Int. + 420 244 0015-00
Fax Int. + 420 244 9107-00

DK (Denmark)
Desim Elektronik APS
Tel. Int. + 45 7022 00-66
Fax Int. + 45 7022 22-20

ES (Spain)
Leuze electronic S.A.
Tel. Int. + 34 93 4097900
Fax Int. + 34 93 4903515

FI (Finland)
SKS-automaatio Oy
Tel. Int. + 358 20 764-61
Fax Int. + 358 20 764-6820

FR (France)
Leuze electronic sarl.
Tel. Int. + 33 160 0512-20
Fax Int. + 33 160 0503-65

GB (United Kingdom)
Leuze Mayser electronic Ltd.
Tel. Int. + 44 14 8040 85-00
Fax Int. + 44 14 8040 38-08

GR (Greece)
UTECO A.B.E.E.
Tel. Int. + 30 211 1206 900
Fax Int. + 30 211 1206 999

HK (Hong Kong)
Sensortech Company
Tel. Int. + 852 26510188
Fax Int. + 852 26510388

HR (Croatia)
Tipteh Zagreb d.o.o.
Tel. Int. + 385 1 381 6574
Fax Int. + 385 1 381 6577

HU (Hungary)
Kvalix Automatika Kft.
Tel. Int. + 36 272 2242
Fax Int. + 36 272 2244

ID (Indonesia)
P.T. Yabestindo Mitra Utama
Tel. Int. + 62 21 92861859
Fax Int. + 62 21 6451044

IL (Israel)
Galoz electronics Ltd.
Tel. Int. + 972 3 9023456
Fax Int. + 972 3 9021990

IN (India)
Global-Tech (India) Pvt. Ltd.
Tel. Int. + 91 20 24470085
Fax Int. + 91 20 24470086

IR (Iran)
Tavan Ressan Co. Ltd.
Tel. Int. + 98 21 2606766
Fax Int. + 98 21 2002883

IT (Italy)
Leuze electronic S.r.l.
Tel. Int. + 39 02 26 1106-43
Fax Int. + 39 02 26 1106-40

JP (Japan)
C. illies & Co., Ltd.
Tel. Int. + 81 3 3443 4143
Fax Int. + 81 3 3443 4118

KE (Kenia)
Profa-Tech Ltd.
Tel. Int. + 254 20 828095/6
Fax Int. + 254 20 828129

KR (South Korea)
Leuze electronic Co., Ltd.
Tel. Int. + 82 31 3828228
Fax Int. + 82 31 3828522

KZ (Republic of Kazakhstan)
KazPromAutomatics Ltd.
Tel. Int. + 7 7212 50 11 50
Fax Int. + 7 7212 50 11 50

MK (Macedonia)
Tipteh d.o.o. Skopje
Tel. Int. + 389 70 399 474
Fax Int. + 389 23 174 197

MX (Mexico)
Leuze Lumiflex México, S.A. de C.V.
Tel. Int. + 52 8183 7186-16
Fax Int. + 52 8183 7185-88

MY (Malaysia)
Ingermark (M) SDN.BHD
Tel. Int. + 60 360 3427-88
Fax Int. + 60 360 3421-88

NG (Nigeria)
SABROW HI-TECH E. & A. LTD.
Tel. Int. + 234 80333 86366
Fax Int. + 234 80333 84463518

NL (Netherlands)
Leuze electronic BV
Tel. Int. + 31 418 65 35-44
Fax Int. + 31 418 65 38-08

NO (Norway)
Elteco A/S
Tel. Int. + 47 35 56 20-70
Fax Int. + 47 35 56 20-99

PL (Poland)
Balluff Sp. z o. o.
Tel. Int. + 48 71 338 49 29
Fax Int. + 48 71 338 49 30

PT (Portugal)
LA2P, Lda.
Tel. Int. + 351 214 447070
Fax Int. + 351 214 447075

RO (Romania)
O'BOYLE s.r.l
Tel. Int. + 40 2 56201346
Fax Int. + 40 2 56221036

RS (Republic of Serbia)
Tipteh d.o.o. Beograd
Tel. Int. + 381 11 3131 057
Fax Int. + 381 11 3018 326

RU (Russian Federation)
Leuze electronic OOO
Tel. Int. + 7 495 933 75 05
Fax Int. + 7 495 933 75 05

SE (Sweden)
Leuze electronic AB
Tel. + 46 8 7315190
Fax + 46 8 7315105

SG + PH (Singapore + Philippines)
Balluff Asia pte Ltd
Tel. Int. + 65 6252 43-84
Fax Int. + 65 6252 90-60

SI (Slovenia)
Tipteh d.o.o.
Tel. Int. + 386 1200 51-50
Fax Int. + 386 1200 51-51

SK (Slowakia)
Schmachtl SK s.r.o.
Tel. Int. + 421 2 58275600
Fax Int. + 421 2 58275601

TH (Thailand)
Industrial Electrical Co. Ltd.
Tel. Int. + 66 2 6426700
Fax Int. + 66 2 6424249

TR (Turkey)
Balluff Sensör Ltd. Sti.
Tel. Int. + 90 212 3200411
Fax Int. + 90 212 3200416

TW (Taiwan)
Great Cofue Technology Co., Ltd.
Tel. Int. + 886 2 29 83 80-77
Fax Int. + 886 2 29 85 33-73

UA (Ukraine)
SV Altera OOO
Tel. Int. + 38 044 4961888
Fax Int. + 38 044 4961818

US + CA (United States + Canada)
Leuze electronic, Inc.
Tel. Int. + 1 248 486-4466
Fax Int. + 1 248 486-6699

ZA (South Africa)
Countapulse Controls (PTY.) Ltd.
Tel. Int. + 27 116 1575-56
Fax Int. + 27 116 1575-13

04/2008

© All rights reserved, especially the right of reproduction, distribution and translation. Copying or reproductions in any form require the written consent of the manufacturer.
Changes reflecting technical improvements may be made.

The main menus

```
BCL504i SF 102
Leuze electronic
     GmbH & Co. KG
SW: V 1.3.1  HW:1
SN: 0704-081894 001
```

Device information - main menu

Information about
- Device type
- Software version
- Hardware version
- Serial number

```
IO1 IO2  IO3
IO4 ATT ERR
                31
          12345678
```

Barcode reading window - main menu

Visualisation of the read barcode information.
See "Indicators in the display" on page 78.

```
Parameter
  Parameter handling
  Decoder table
  Digital SWIO
  PROFIBUS
```

Parameter - main menu

Configuration of the barcode reader.
See "Parameter menu" on page 83.

```
Language selection
o Deutsch
o English
o Español
o Français
o Italiano
```

Language selection - main menu

Selection of the display language.
See "Language selection menu" on page 90.

```
Service

  Diagnostics
  Status messages
```

Service - main menu

Scanner diagnosis and status messages.
See "Service menu" on page 90.

```
Actions

o Start decoding
o Start alignment
o Start auto-setup
o Start teach-in
```

Actions main menu

Various functions for scanner configuration and manual operation.
See "Actions menu" on page 91.

Device buttons:

- Navigate **upward/laterally**
- Navigate **downward/laterally**
- **ESCAPE** Leave
- **ENTER** confirm

Input of values

```
12|
 <-|0123456789     save
Standard ----- Unit
   126  |    |
```

- ← + ↵ Delete character
- 0...9 + ↵ Enter digit
- save + ↵ Save input

PWR

PWR LED

Off	Device OFF
Flashes green	Device ok, initialisation phase
Green, continuous light	Device OK
Orange, continuous light	Service mode
Flashes red	Device ok, warning set
Red, continuous light	Device error

BUS

BUS LED

Off	No supply voltage
Flashes green	Initialisation
Green, continuous light	Operation OK
Flashes orange	Timeout
Flashes red	Communication error
Red, continuous light	Network error

1 General information 12
1.1 Explanation of symbols 12
1.2 Declaration of conformity 12

2 Safety notices 13
2.1 General safety notices 13
2.2 Safety standards 13
2.3 Approved purpose 13
2.4 Working safely 14

3 Fast commissioning / operating principle 16
3.1 Mounting the BCL 504*i* 16
3.2 Device arrangement and selection of the mounting location 16
3.3 Electrical connectionBCL 504*i* 17
3.4 Starting the device 17
3.4.1 Setting the device address on the display 18
3.5 BCL 504*i* on the PROFIBUS 19
3.6 Barcode reading 20

4 Device description 21
4.1 About the barcode readers of the BCL 500*i* series 21
4.2 Characteristics of the barcode readers of the BCL 500*i* series 21
4.3 Device construction 24
4.4 Reading techniques 25
4.4.1 Line scanner (single line) 25
4.4.2 Line scanner with oscillating mirror 26
4.4.3 Omnidirectional reading 27
4.5 Fieldbus systems 28
4.5.1 PROFIBUS DP 28
4.6 Heater 28
4.7 External parameter memory 29
4.8 autoReflAct 30
4.9 Reference codes 30
4.10 autoConfig 31

5 Specifications ... 32

5.1 General specifications of the barcode readers ... 32
5.1.1 Line scanner ... 32
5.1.2 Oscillating-mirror scanner ... 34
5.1.3 Line scanner with deflection mirror ... 34

5.2 Heating models of the barcode readers ... 35
5.2.1 Line scanner with heating ... 36
5.2.2 Oscillating-mirror scanner with heating ... 36
5.2.3 Line scanner with deflection mirror and heating ... 37

5.3 Dimensioned drawings ... 38
5.3.1 Line scanner with / without heating ... 38
5.3.2 Deflection mirror scanner with / without heating ... 39
5.3.3 Oscillating-mirror scanner with / without heating ... 40

5.4 Type overview BCL 504*i* ... 41

5.5 Reading field curves / optical data ... 42

5.6 Reading field curves ... 43
5.6.1 High Density (N) Optics: BCL 504*i* SN 100/102 ... 44
5.6.2 High Density (N) Optics: BCL 504*i* ON 100 ... 45
5.6.3 Medium Density (M) Optics: BCL 504*i* SM 100/102 ... 46
5.6.4 Medium Density (M) Optics: BCL 504*i* OM 100 ... 47
5.6.5 Low Density (F) Optics: BCL 504*i* SF 100/102 ... 48
5.6.6 Low Density (F) Optics: BCL 504*i* OF 100 ... 49
5.6.7 Ultra Low Density (L) Optics: BCL 504*i* SL 102 ... 50
5.6.8 Ultra Low Density (L) Optics: BCL 504*i* OL 100 ... 51

5.7 Reading field curves for heating devices ... 52
5.7.1 High Density (N) Optics: BCL 504*i* SN 102 H ... 52
5.7.2 High Density (N) Optics: BCL 504*i* SN 100 H ... 53
5.7.3 High Density (N) Optics: BCL 504*i* ON 100 H ... 54
5.7.4 Medium Density (M) Optics: BCL 504*i* SM 102 H ... 55
5.7.5 Medium Density (M) Optics: BCL 504*i* SM 100 H ... 56
5.7.6 Medium Density (M) Optics: BCL 504*i* OM 100 H ... 57
5.7.7 Low Density (F) Optics: BCL 504*i* SF 102 H ... 58
5.7.8 Low Density (F) Optics: BCL 504*i* SF 100 H ... 59
5.7.9 Low Density (F) Optics: BCL 504*i* OF 100 H ... 60
5.7.10 Ultra Low Density (L) Optics: BCL 504*i* SL 102 H ... 61
5.7.11 Ultra Low Density (L) Optics: BCL 504*i* OL 100 H ... 62

6 Installation and mounting ... 63

6.1 Storage, transportation ... 63

6.2 Mounting the BCL 504*i* ... 64
6.2.1 Fastening with M4 x 6 screws ... 64
6.2.2 BT 56 mounting device ... 65

6.3 Device arrangement ... 66
6.3.1 Selecting a mounting location ... 66
6.3.2 Avoiding total reflection – Line scanner ... 67
6.3.3 Avoiding total reflection – oscillating/deflection-mirror scanner ... 67
6.3.4 Mounting location ... 68
6.3.5 Devices with integrated heating ... 68
6.3.6 Maximum permissible read angles between BCL 504*i* and barcode ... 69
6.4 Attaching laser warning sign ... 69
6.5 Cleaning ... 69

7 Electrical connection ... 70
7.1 Safety notices for the electrical connection ... 70
7.2 Electrical connection of the BCL 504*i* ... 71
7.2.1 PWR – Voltage supply and switching input/outputs 3 and 4 ... 72
7.2.2 SERVICE – USB interface (type A) ... 74
7.2.3 SW IN/OUT – Switching input/switching output ... 75
7.2.4 HOST / BUS IN for BCL 504*i* ... 76
7.2.5 BUS OUT for the BCL 504*i* ... 77
7.2.6 PROFIBUS termination ... 77
7.3 Line lengths and shielding ... 77

8 Display and control panel ... 78
8.1 Structure of the control panel ... 78
8.2 Status display and operation ... 78
8.2.1 Indicators in the display ... 78
8.2.2 LED status indicators ... 79
8.2.3 Control buttons ... 81
8.3 Menu description ... 82
8.3.1 The main menus ... 82
8.3.2 Parameter menu ... 83
8.3.3 Language selection menu ... 90
8.3.4 Service menu ... 90
8.3.5 Actions menu ... 91
8.4 Operation ... 93

9 Leuze webConfig tool ... 95
9.1 Connecting the SERVICE USB interface ... 95
9.2 Installing the required software ... 95
9.2.1 System requirements ... 95
9.2.2 Installing the USB driver ... 96

9.3 Starting the webConfig tool ... 97

9.4 Short description of the webConfig tool ... 98

9.4.1 Module overview in the Configuration menu ... 98

10 Commissioning and configuration ... 100

10.1 General information on the PROFIBUS implementation of the BCL 504*i* ... 100

10.1.1 Communication profile ... 100

10.1.2 Bus-access protocol ... 100

10.1.3 Device types ... 101

10.1.4 Expanded DP functions ... 101

10.1.5 Automatic baud rate detection ... 102

10.2 Measures to be performed prior to the initial commissioning ... 103

10.3 Address setting ... 104

10.3.1 Setting the device address on the display ... 104

10.4 Commissioning via the PROFIBUS ... 106

10.4.1 General information ... 106

10.4.2 Preparing the control system for consistent data transmission ... 106

10.4.3 General information on the GSD file ... 107

10.4.4 Permanently defined parameters / device parameters ... 108

10.5 Overview of the project modules ... 112

10.6 Decoder modules ... 115

10.6.1 Modules 1-4 – Code table extensions 1 to 4 ... 115

10.6.2 Module 5 – Code type features (symbology) ... 117

10.6.3 Module 7 – Code fragment technology ... 118

10.7 Control modules ... 119

10.7.1 Module 10 – Activations ... 119

10.7.2 Module 11 – Reading gate control ... 121

10.7.3 Module 12 – Multi-label ... 123

10.7.4 Module 13 – Fragmented read result ... 124

10.7.5 Module 14 – Interlinked read result ... 125

10.8 Result Format ... 126
10.8.1 Module 20 – Decoder state ... 126
10.8.2 Modules 21-27 – Decoding result ... 128
10.8.3 Module 30 – Data formatting ... 130
10.8.4 Module 31 – Reading gate number ... 131
10.8.5 Module 32 – Reading gate time ... 131
10.8.6 Module 33 – Code position ... 132
10.8.7 Module 34 – Reading reliability (equal scans) ... 132
10.8.8 Module 35 – Barcode length ... 133
10.8.9 Module 36 – Scans with information ... 133
10.8.10 Module 37 – Decoding quality ... 134
10.8.11 Module 38 – Code direction ... 134
10.8.12 Module 39 – Number of digits ... 135
10.8.13 Module 40 – Code type ... 135
10.8.14 Module 41 – Code position in the swivel range ... 136

10.9 Data Processing ... 137
10.9.1 Module 50 – Characteristics filter ... 137
10.9.2 Module 51 – Data filtering ... 139

10.10 Identifier ... 140
10.10.1 Module 52 – Segmentation according to the EAN process ... 140
10.10.2 Module 53 – Segmentation via fixed positions ... 141
10.10.3 Module 54 – Segmentation according to identifier and separator ... 144
10.10.4 Module 55 – String handling parameters ... 146

10.11 Device Functions ... 147
10.11.1 Module 60 – Device status ... 147
10.11.2 Module 61 – Laser control ... 148
10.11.3 Module 62 – Display ... 149
10.11.4 Module 63 – Alignment ... 150
10.11.5 Module 64 – Oscillating mirror ... 151
10.11.6 Module 65 – Deflection mirrors ... 152

10.12 Switching inputs/ outputs SWIO 1..4 ... 153
10.12.1 Parameters for operating as an output ... 153
10.12.2 Parameters for operating as an input ... 155
10.12.3 Switch-on and switch-off functions for operation as an output ... 157
10.12.4 Input functions for operation as an input ... 157
10.12.5 Module 70 – Switching input/output SWIO1 ... 158
10.12.6 Module 71 – Switching input/output SWIO2 ... 160
10.12.7 Module 72 – Switching input/output SWIO3 ... 162
10.12.8 Module 73 – Switching input/output SWIO4 ... 164
10.12.9 Module 74 – SWIO status and control ... 166

10.13 Data output ... 169
10.13.1 Module 80 – Sorting ... 169

ПРОМЭЛЕКТРОНИКА / sales@prom-elec.com

10.14 Reference code comparison ... 170
10.14.1 Module 81 – Reference code comparator 1 ... 170
10.14.2 Module 82 – Reference code comparator 2 ... 172
10.14.3 Module 83 – Reference code comparison pattern 1 ... 174
10.14.4 Module 84 – Reference code comparison pattern 2 ... 175

10.15 Special Functions ... 176
10.15.1 Module 90 – Status and control ... 176
10.15.2 Module 91 – AutoReflAct (automatic reflector activation) ... 177
10.15.3 Module 92 – AutoControl ... 178

10.16 Example configuration: Indirect activation via the PLC ... 179
10.16.1 Task ... 179
10.16.2 Procedure ... 179

10.17 Sample configuration: Direct activation via the switching input ... 181
10.17.1 Task ... 181
10.17.2 Procedure ... 181

11 Diagnostics and troubleshooting ... 183

11.1 General causes of errors ... 183

11.2 Interface errors ... 183

12 Type overview and accessories ... 185

12.1 Type key ... 185

12.2 Type overview BCL 504*i* ... 186

12.3 Accessory terminating resistor ... 187

12.4 Accessory connectors ... 187

12.5 Accessory USB cable ... 187

12.6 Accessory external parameter memory ... 187

12.7 Accessory mounting device ... 187

12.8 Accessory ready-made cables for voltage supply ... 188
12.8.1 Contact assignment of PWR connection cable ... 188
12.8.2 Specifications of the cables for voltage supply ... 188
12.8.3 Order codes of the cables for voltage supply ... 188

12.9 Accessory ready-made cables for bus connection ... 189
12.9.1 General information ... 189
12.9.2 Contact assignment of KB PB… connection cable for PROFIBUS/multiNet plus ... 189
12.9.3 Technical data of interface connection cable ... 190
12.9.4 Order codes for interface connection cables ... 190

13 Maintenance ... 191

13.1 General maintenance information ... 191

13.2 Repairs, servicing ... 191

13.3 Disassembling, packing, disposing ... 191

14 Appendix ... 192

14.1 Declaration of conformity ... 192

14.2 ASCII character set ... 193

14.3 Barcode samples ... 197

14.3.1 Module 0.3 ... 197

14.3.2 Module 0.5 ... 198

Figure 2.1: Attachment of the stick-on labels with warning notices at the BCL 504*i* ... 15
Figure 3.1: Connections of the BCL 504*i* ... 17
Figure 4.1: Line scanner, line scanner with deflection mirror and oscillating-mirror scanner ... 21
Figure 4.2: Possible barcode orientation ... 23
Figure 4.3: Device construction ... 24
Figure 4.4: Deflection principle for the line scanner ... 25
Figure 4.5: Deflection principle for the line scanner with oscillating mirror add-on ... 26
Figure 4.6: Principle arrangement for omnidirectional reading ... 27
Figure 4.7: PROFIBUS DP ... 28
Figure 4.8: External parameter memory ... 29
Figure 4.9: Reflector arrangement for autoReflAct ... 30
Table 5.1: Specifications of the BCL 504*i* line scanners without heating ... 32
Table 5.2: Specifications of the BCL 504*i* oscillating-mirror scanners without heating ... 34
Table 5.3: Specifications of the BCL 504*i* deflection-mirror scanners without heating ... 34
Table 5.4: Specifications of the BCL 504*i* line scanners with heating ... 36
Table 5.5: Specifications of the BCL 504*i* oscillating-mirror scanners with heating ... 36
Table 5.6: Specifications of the BCL 504*i* deflection-mirror scanners with heating ... 37
Figure 5.1: Dimensioned drawing BCL 504*i* line scanner S…102 ... 38
Figure 5.2: Dimensioned drawing BCL 504*i* deflection-mirror scanner S…100 ... 39
Figure 5.3: Dimensioned drawing BCL 504*i* oscillating-mirror scanner O…100 ... 40
Table 5.7: Type overview BCL 504*i* ... 41
Figure 5.4: The most important characteristics of a barcode ... 42
Figure 5.5: Zero position of the reading distance ... 43
Table 5.8: Reading conditions ... 43
Figure 5.6: "High Density" reading field curve for line scanner (with/without deflection mirror) ... 44
Figure 5.7: "High Density" reading field curve for oscillating-mirror scanners ... 45
Figure 5.8: Lateral "High Density" reading field curve for oscillating-mirror scanners ... 45
Figure 5.9: "Medium Density" reading field curve for line scanner (with/without deflection mirror) ... 46
Figure 5.10: "Medium Density" reading field curve for oscillating-mirror scanners ... 47
Figure 5.11: Lateral "Medium Density" reading field curve for oscillating-mirror scanners ... 47
Figure 5.12: "Low Density" reading field curve for line scanner (with/without deflection mirror) ... 48
Figure 5.13: "Low Density" reading field curve for oscillating-mirror scanners ... 49
Figure 5.14: Lateral "Low Density" reading field curve for oscillating-mirror scanners ... 49
Figure 5.15: "Ultra Low Density" reading field curve for line scanner without deflection mirror ... 50
Figure 5.16: "Ultra Low Density" reading field curve for oscillating-mirror scanners ... 51
Figure 5.17: Lateral "Ultra Low Density" reading field curve for oscillating-mirror scanners ... 51
Figure 5.18: "High Density" reading field curve for line scanner with heating (without deflection mirror) ... 52
Figure 5.19: "High Density" reading field curve for line scanner with heating (with deflection mirror) ... 53
Figure 5.20: "High Density" reading field curve for oscillating-mirror scanners with heating ... 54
Figure 5.21: Lateral "High Density" reading field curve for oscillating-mirror scanners with heating ... 54
Figure 5.22: "Medium Density" reading field curve for line scanner with heating (without deflection mirror) ... 55
Figure 5.23: "Medium Density" reading field curve for line scanner with heating (with deflection mirror) ... 56

Figure 5.24: "Medium Density" reading field curve for oscillating-mirror scanners with heating 57
Figure 5.25: Lateral "Medium Density" reading field curve for oscillating-mirror scanners with heating 57
Figure 5.26: "Low Density" reading field curve for line scanner with heating (without deflection mirror) 58
Figure 5.27: "Low Density" reading field curve for line scanner with heating (with deflection mirror) 59
Figure 5.28: "Low Density" reading field curve for oscillating-mirror scanners with heating 60
Figure 5.29: Lateral "Low Density" reading field curve for oscillating-mirror scanners with heating 60
Figure 5.30: "Ultra Low Density" reading field curve for line scanner with heating (without deflection mirror) 61
Figure 5.31: "Ultra Low Density" reading field curve for oscillating-mirror scanners with heating 62
Figure 5.32: Lateral "Ultra Low Density" reading field curve for oscillating-mirror scanners with heating ... 62
Figure 6.1: Device name plate BCL 504*i* 63
Figure 6.2: Fastening options using M4x6 threaded holes 64
Figure 6.3: BT 56 mounting device 65
Figure 6.4: Mounting example BCL 504*i* 66
Figure 6.5: Total reflection – line scanner 67
Figure 6.6: Total reflection – BCL 504*i* with oscillating/deflection mirror 68
Figure 6.7: Reading angle for the line scanner 69
Figure 7.1: Location of the electrical connections 70
Figure 7.2: Connections of the BCL 504*i* 71
Table 7.1: Pin assignment PWR 72
Figure 7.1: Switching input connection diagram SWIO_3 and SWIO_4 73
Figure 7.2: Switching output connection diagram SWIO_3 / SWIO_4 73
Table 7.2: Pin assignments of SERVICE – USB interface 74
Table 7.3: Pin assignment SW IN/OUT 75
Figure 7.3: Switching input connection diagram SWIO_1 and SWIO_2 75
Figure 7.4: Switching output connection diagram SWIO_1 / SWIO_2 76
Table 7.4: Pin assignment HOST / BUS IN BCL 504*i* 76
Table 7.5: Pin assignment BUS OUT 77
Table 7.6: Line lengths and shielding 77
Figure 8.1: Structure of the control panel 78
Table 8.1: Parameter handling submenu 83
Table 8.2: Decoder table submenu 84
Table 8.3: Digital SWIO submenu 87
Table 8.4: PROFIBUS submenu 90
Figure 9.1: Connecting the SERVICE USB interface 95
Figure 9.2: The start page of the webConfig tool 97
Figure 9.3: Module overview in the webConfig tool 98
Table 10.1: PROFIBUS bus-access processes 100
Table 10.2: PROFIBUS DP master and slave types 101
Table 10.3: Services for DPVM1 class 1 and slaves 101
Table 10.4: Services for DPVM1 class 2 and slaves 102
Figure 10.1: Connections of the BCL 504*i* 103
Table 10.5: "Common" Parameters 108

Table 10.6: Module overview ... 113
Table 10.7: Parameters for modules 1-4 ... 115
Table 10.8: Parameters for module 5 ... 117
Table 10.9: Parameters for module 7 ... 118
Table 10.10: Parameters for module 10 ... 119
Table 10.11: Output data for module 10 ... 119
Table 10.12: Parameters for module 11 ... 121
Table 10.13: Parameters for module 12 ... 123
Table 10.14: Input data for module 12 ... 123
Table 10.15: Parameters for module 13 ... 124
Table 10.16: Input data for module 13 ... 124
Table 10.17: Parameters for module 13 ... 125
Table 10.18: Input data for module 20 ... 126
Table 10.19: Input data for modules 21 … 27 ... 128
Table 10.20: Parameters for module 30 ... 130
Table 10.21: Input data for module 31 ... 131
Table 10.22: Input data for module 32 ... 131
Table 10.23: Input data for module 33 ... 132
Table 10.24: Input data for module 34 ... 132
Table 10.25: Input data for module 35 ... 133
Table 10.26: Input data for module 36 ... 133
Table 10.27: Input data for module 37 ... 134
Table 10.28: Input data for module 38 ... 134
Table 10.29: Input data for module 39 ... 135
Table 10.30: Input data for module 40 ... 135
Table 10.31: Input data for module 41 ... 136
Table 10.32: Parameters for module 50 ... 137
Table 10.33: Parameters for module 51 ... 139
Table 10.34: Parameters for module 52 ... 140
Table 10.35: Parameters for module 53 ... 141
Table 10.36: Parameters for module 54 ... 144
Table 10.37: Parameters for module 55 ... 146
Table 10.38: Input data for module 60 ... 147
Table 10.39: Output data for module 60 ... 147
Table 10.40: Parameters for module 61 ... 148
Table 10.41: Parameters for module 62 ... 149
Table 10.42: Input data for module 63 ... 150
Table 10.43: Output data for module 63 ... 150
Table 10.44: Parameters for module 64 ... 151
Table 10.45: Parameters for module 65 ... 152
Figure 10.2: Example 1: Start-up delay > 0 and switch-on time = 0 ... 153
Figure 10.3: Example 2: Start-up delay > 0 and switch-on time > 0 ... 153
Figure 10.4: Example 3: Start-up delay >0 Switch-off signal prior to lapsing of the start-up delay ... 154

Figure 10.5: Start-up delay in input mode 155
Figure 10.6: Switch-on time in input mode 156
Figure 10.7: Switch-off delay in input mode 156
Table 10.46: Switch-on/switch-off functions 157
Table 10.47: Input functions 157
Table 10.48: Parameters for module 70 – Input/Output 1 158
Table 10.49: Parameters for module 71 – Input/Output 2 160
Table 10.50: Parameters for module 72 – Input/Output 3 162
Table 10.51: Parameters for module 73 – Input/Output 4 164
Table 10.52: Input data for module 74 Input/output status and control 166
Table 10.53: Output data for module 74 Input/output status and control 167
Table 10.54: Parameters for module 80 169
Table 10.55: Parameters for module 81 – Reference code comparison 170
Table 10.56: Parameters for module 82 – Reference code comparison 172
Table 10.57: Parameter module 83 – Reference code comparison pattern 174
Table 10.58: Parameter module 84 – Reference code comparison pattern 175
Table 10.59: Input data for module 90 – Status and control 176
Table 10.60: Parameters for module 91 – AutoreflAct 177
Table 10.61: Parameters for module 92 – AutoControl 178
Table 10.62: Input data for module 92 – AutoControl 178
Table 10.63: Device parameters for example configuration 2 181
Table 11.1: General causes of errors 183
Table 11.2: Interface error 183
Table 12.1: Type overview BCL 504*i* 186
Table 12.2: Terminating resistor for the BCL 504*i* 187
Table 12.3: Connectors for the BCL 504*i* 187
Table 12.4: Cables for the BCL 504*i* 187
Table 12.5: External parameter memory for the BCL 504*i* 187
Table 12.6: Mounting devices for the BCL 504*i* 187
Table 12.7: PWR cables for the BCL 504*i* 188
Figure 12.8: Cable structure of PROFIBUS/multiNet plus connection cable 189
Table 12.9: Bus connection cables for the BCL 504*i* 190
Figure 14.1: Barcode sample labels (module 0.3) 197
Figure 14.2: Barcode sample labels (module 0.5) 198

1 General information

1.1 Explanation of symbols

The symbols used in this technical description are explained below.

Attention!

This symbol precedes text messages which must strictly be observed. Failure to comply with this information results in injuries to personnel or damage to the equipment.

Attention Laser!

This symbol warns of possible danger caused by hazardous laser radiation.

Notice!

This symbol indicates text passages containing important information.

1.2 Declaration of conformity

The barcode readers of the BCL 500*i* series have been developed and manufactured in accordance with the applicable European standards and directives.

The BCL 500*i* series is "UL LISTED" according to American and Canadian safety standards, and fulfils the requirements of Underwriter Laboratories Inc. (UL).

Notice!

You can find the Declaration of Conformity of the devices in the appendix of the manual on page 192.

The manufacturer of the product, Leuze electronic GmbH & Co KG in D-73277 Owen/Teck, possesses a certified quality assurance system in accordance with ISO 9001.

2 Safety notices

2.1 General safety notices

Documentation

All entries in this technical description must be heeded, in particular the present chapter "Safety notices". Keep this technical description in a safe place. It should be available at all times.

Safety regulations

Observe the locally applicable regulations and the rules of the employer's liability insurance association.

Repair

Repairs must only be carried out by the manufacturer or an authorised representative.

2.2 Safety standards

The barcode readers of the BCL 500*i* series were developed, manufactured and tested in accordance with the applicable safety standards. They correspond to the state of the art.

2.3 Approved purpose

Attention!

The protection of personnel and the device cannot be guaranteed if the device is operated in a manner not complying with its intended use.

Barcode readers of the BCL 500*i* series are conceived as stationary, high-speed scanners with integrated decoders for all current barcodes used for automatic object detection.

In particular, unauthorised uses include:

- rooms with explosive atmospheres
- operation for medical purposes

Areas of application

The barcode readers of the BCL 500*i* series are especially designed for the following areas of application:

- Storage and conveying technologies, in particular for object identification on fast-moving conveyor belts
- Pallet transportation applications
- Automobile sector
- Omnidirectional reading

2.4 Working safely

Attention!

Access to or changes on the device, except where expressly described in this operating manual, are not authorised.

Safety regulations

Observe the locally applicable legal regulations and the rules of the employer's liability insurance association.

Qualified personnel

Mounting, commissioning and maintenance of the device must only be carried out by qualified personnel.
Electrical work must be carried out by a certified electrician.

Attention, laser radiation!

If you look into the beam path over a longer time period, the retina of your eye may be damaged!

Never look directly into the beam path!

Do not point the laser beam of the BCL 504i at persons!

When mounting and aligning the BCL 504i, avoid reflections of the laser beam off reflective surfaces!

The BCL 504i barcode readers comply with safety standards EN 60825-1 for a class 2 product. They also comply with the U.S. 21 CFR 1040.10 regulations for a class II laser product except for deviations pursuant to Laser Notice No. 50, dated July 26, 2001.

Radiant Energy: The BCL 504i uses a low power visible laser diode. The emitted wavelength is 655 nm. The average laser power is less than 1 mW in accordance with the definition of class 2 lasers.

Adjustments: Do not attempt any adjustments to or alterations of this product.

Do not remove the protective housing of the barcode reader. There are no user-serviceable parts inside.

The scanner window is the only aperture through which light may be observed on this product. A failure of the scanner motor, while the laser diode continues to emit a laser beam, may cause emission levels to exceed those for safe operation. The barcode reader has safeguards to prevent this occurrence. If, however, a stationary beam is emitted, the failing barcode reader should be disconnected from its power source immediately.

CAUTION: Use of controls or adjustments or performance of procedures other than specified herein may result in hazardous light exposure.

The use of optical instruments or devices in combination with the device increases the danger of eye damage!

The housing of the BCL 504i is provided with warning notices B and C above and next to the reading window as shown in the following figure:

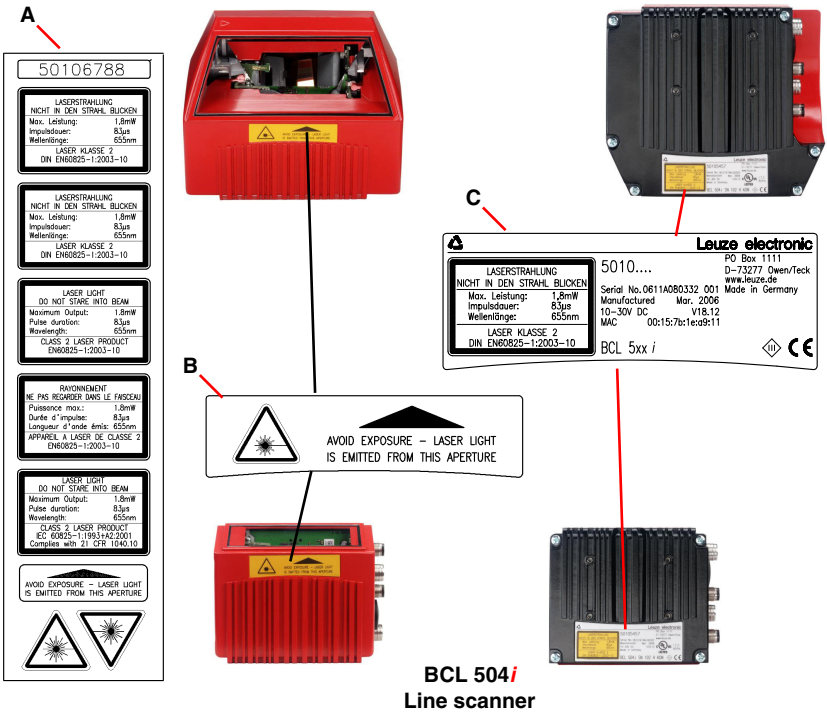

A	Included stick-on labels
B	Aperture label
C	Name plate

Figure 2.1: Attachment of the stick-on labels with warning notices at the BCL 504*i*

Notice!

It is important that you attach the stick-on labels supplied to the device (A in figure 2.1)! If the signs would be covered due to the installation situation of the BCL 504i, attach them instead in the immediate vicinity of the BCL 504i in such a way that it is not necessary to look into the laser beam when reading the notices!

3 Fast commissioning / operating principle

Below you will find a short description for the initial commissioning of the BCL 504*i*. Detailed explanations for all listed points can be found throughout this technical description.

3.1 Mounting the BCL 504*i*

There are two different types of mounting arrangements for the BCL 504*i*:

- Using two M4x6 screws on the rear of the device or using four M4x6 screws on the bottom of the device.
- Using a BT 56 mounting device on the two fastening grooves.

3.2 Device arrangement and selection of the mounting location

In order to select the right mounting location, several factors must be considered:

- Size, orientation, and position tolerance of the barcodes on the objects to be scanned.
- The reading field of the BCL 504*i* in relation to the barcode module width.
- The resulting minimum and maximum reading distance from the respective reading field (see chapter 5.5 "Reading field curves / optical data").
- The permissible line lengths between the BCL 504*i* and the host system depending on which interface is used.
- The correct time for data output. The BCL 504*i* should be positioned in such a way that, taking into consideration the time required for data processing and the conveyor belt speed, there is sufficient time to e.g. initiate sorting operations on the basis of the read data.
- The display and control panel should be very visible and accessible.
- For configuring and commissioning with the webConfig tool, the USB interface should be easily accessible.

For specific information, please refer to chapter 4.4.

Notice!

The beam exits the BCL 504i as follows for the respective devices:
*- line scanner **parallel** to the **housing base***
*- oscillating mirror and deflection mirror **perpendicular** to the **housing base***
The black areas in figure 6.1 are the housing base. The best read results are obtained when:

- *The BCL 504i is mounted in such a way that the scanning beam is incident on the barcode at an angle of inclination greater than ±10° … 15° to vertical.*
- *The reading distance lies in the middle area of the reading field.*
- *The barcode labels are of good print quality and have good contrast ratios.*
- *You do not use high-gloss labels.*
- *There is no direct sunlight.*

3.3 Electrical connectionBCL 504*i*

The **BCL 504*i*** is equipped with four M12 plugs/sockets which are A- and B-coded.

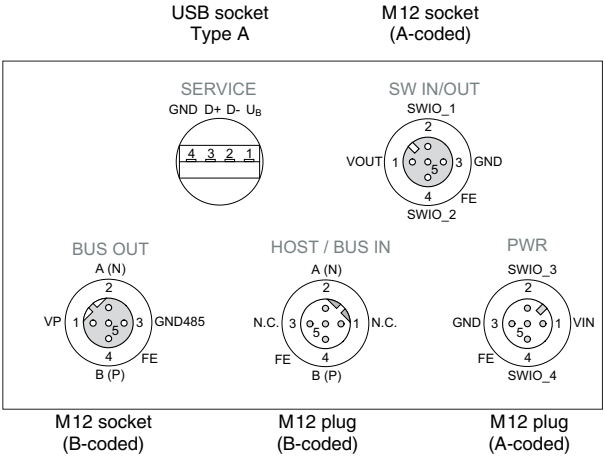

Figure 3.1: Connections of the BCL 504*i*

The **voltage supply** (10 … 30VDC) is connected at the **PWR** M12 connector.

Available at both the **PWR** M12 connector as well as at the **SW IN/OUT** M12 socket are **four freely programmable switching inputs/outputs** for custom adaptation to the respective application. Detailed information on this topic can be found in chapter 7.2.1 and chapter 7.2.3.

The **PROFIBUS** is connected via **BUS IN**, or, in the case of a continuing network, via **BUS OUT**. If BUS OUT is not used, the PROFIBUS must be terminated at this point with an M12 terminating resistor (see chapter 12.3 "Accessory terminating resistor"). In the case of a stub cable, BUS OUT can remain open.

3.4 Starting the device

↳ *Connect the supply voltage +10 … 30VDC (typ. +24VDC); the BCL 504i starts up and the barcode reading window appears on the display:*

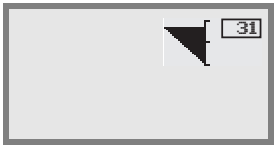

By default, parameter enabling is deactivated and you cannot change any settings. If you wish to carry out the configuration via the display, you must activate parameter enabling. Further information can be found in chapter "Parameter enabling" on page 93.

As a first step, you need to set the device address of the BCL 504*i*.

3.4.1 Setting the device address on the display

The display of the BCL 504*i* possesses an important function for setting the PROFIBUS address. The PROFIBUS address is set here, i.e. the respective station number of the network device.

Notice!

The address setting can only be performed via the display if parameter enabling is active. Information on this topic can be found in chapter "Parameter enabling" on page 93.

The set address must be > ≥0 and < 126. Each network device is thereby automatically informed that it is a slave on the PROFIBUS with its specific address and that it is initialised and queried by the PLC.

The PROFIBUS permits an address range from 0 to 126. Address 126 must not be used for data communication. It may only be used temporarily for commissioning. The default address is 126.

The address must be assigned individually for each barcode reader of type BCL 504*i*; this can be performed by making entries on the display or with the webConfig tool.

Notice!

The BCL 504i does not permit address assignment via the PROFIBUS!

To set the address via the display, proceed as follows:

In the main menu, use the ▲▼ buttons to select the Parameter menu and use the enter button ↵ to activate the Parameter menu. The following screen appears:

```
Parameter                1
  Parameter handling
  Decoder table
  Digital SWIO
  PROFIBUS
```

In the Parameter menu, use the ▲▼ buttons to select the PROFIBUS menu item.

↵

```
PROFIBUS

o PROFIBUS address
```

Press the enter button to enter the PROFIBUS menu.

↵

```
PROFIBUS address
12|
 <-0123456789     save
Standard ----- Unit
   126  |    |
```

Press the enter button again to enter the menu for setting the PROFIBUS address.

Use the ▲▼ and ↵ buttons to set the desired PROFIBUS address. An accidental, incorrect entry can be corrected by selecting <-| and then pressing ↵.
Then use the ▲▼ buttons to select save and save the set PROFIBUS address by pressing ↵.

After saving the PROFIBUS address, the BCL 504*i* performs a restart and then returns to operation with the barcode reading menu.

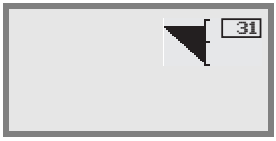

In the upper right part of this display, you can check the address which you set.

Notice!

Permissible values for the PROFIBUS address are 0 … 125. Make certain that a different PROFIBUS address is assigned to each PROFIBUS participant.

All other parameters required for the reading task, such as setting the code type and number of digits, etc., are set using the engineering tool of the PLC with the aid of the various available modules (see chapter 10.4).

3.5 BCL 504*i* on the PROFIBUS

- *Install the GSD file associated with the BCL 504i in the PROFIBUSmanager of your control.*
- *Activate the desired modules (at least module 10 and one of the modules 21 … 27).*
- *Store the slave address for the BCL 504i in the PROFIBUSmanager. Ensure that the address is the same as the address configured in the device.*

You can find further information beginning on page 106.

3.6 Barcode reading

With the aid of the "Action menu", you can instruct the BCL 504*i* to read a barcode.

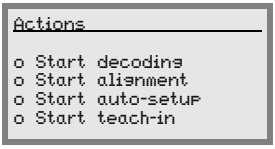

In the main menu, use the ▲▼ buttons to select the Actions menu item. Activate the Actions menu with ↵. Then select Start decoding with ▲▼ and press ↵ again to start the barcode reading operation.

To test, you can use the following barcode in the 2/5 Interleaved format. The barcode module here is 0.5:

Modul 0,5

The read information appears in the display and is simultaneously passed on to the primary system (PLC or PC).

Please check the incoming data of the barcode information there.

Alternatively, you can connect a photoelectric sensor or a 24 V DC switching signal to the SW IN/OUT socket for read activation. To do this, however, you must appropriately configure the switching input (see chapter 7.2.3 "SW IN/OUT – Switching input/switching output").

4 Device description

4.1 About the barcode readers of the BCL 500*i* series

Barcode readers of the BCL 500*i* series are high-speed scanners with integrated decoder for all commonly used barcodes, e.g. 2/5 Interleaved, Code 39, Code 128, EAN 8/13 etc., as well as codes from the RSS family.

Barcode readers of the BCL 500*i* series are available in various optics models as well as line scanners, line scanners with deflection mirrors, oscillating mirrors and also optionally as heated models.

Figure 4.1: Line scanner, line scanner with deflection mirror and oscillating-mirror scanner

The extensive options for device configuration via display or software enable adaptation to a multitude of reading tasks. Due to the large reading distance combined with the great depth of field and a very compact construction, the device is ideally suited for package and pallet transportation systems. In general, the barcode readers of the BCL 500*i* series are designed for the conveyor and storage technology market.

The interfaces (**RS 232**, **RS 485** and **RS 422**) integrated in the various device models and the fieldbus systems (**PROFIBUS DP**, **ProfiNet** and **Ethernet**) of the barcode readers of the BCL 500*i* series offer optimum connection to the primary host system.

4.2 Characteristics of the barcode readers of the BCL 500*i* series

Performance features:

- Integrated fieldbus connectivity = *i* -> Plug-and-Play fieldbus coupling and easy networking
- Numerous interface variants facilitate connection to the primary systems
  - RS 232, RS 422 as well as with integrated multiNet plus master

  - RS 485 and multiNet plus slave

  alternatively, various fieldbus systems, such as
  - PROFIBUS DP
  - PROFINET
  - Ethernet
- Integrated code fragment technology (**CRT**) enables the identification of soiled or damaged barcodes
- Maximum depth of field and reading distances from 200 mm to 1600 mm
- Large optical opening angle and, thus, large reading field width
- High scanning rate from 800 - 1200 scans/s for fast reading tasks
- Intuitive, backlit, multi-language display with user-friendly menu navigation
- Integrated **USB 1.1** service interface
- Adjustment of all device parameters with a web browser
- Connection options for an external parameter memory
- Easy alignment- and diagnosis functions
- M12 connections with Ultra-Lock™ technology
- Four freely programmable switching inputs/outputs for the activation or signalling of states
- Automatic monitoring of the read quality with **autoControl**
- Automatic recognition and setting of the barcode type using **autoConfig**
- Reference code comparison
- Optional heating models to -35 °C
- Heavy-duty housing of protection class IP 65

Notice!

Information on technical data and characteristics can be found in chapter 5.

General information

The integrated fieldbus connectivity = ***i*** contained in the barcode readers of the BCL 500***i*** series facilitates the use of identification systems which function without connector unit or gateways. The integrated fieldbus interface considerably simplifies handling. The Plug-and-Play concept enables easy networking and very simple commissioning: Directly connect the respective fieldbus and all configuration is performed with no additional software.

For decoding barcodes, the barcode readers of the BCL 500***i*** series make available the proven **CRT decoder** with code fragment technology:

The proven code fragment technology (**CRT**) enables barcode readers of the BCL 500***i*** series to read barcodes with a small bar height, as well as barcodes with a damaged or soiled print image.

With the aid of the **CRT decoder**, barcodes can also be read without problem in other demanding situations, such as with a large tilt angle (azimuth angle or even twist angle).

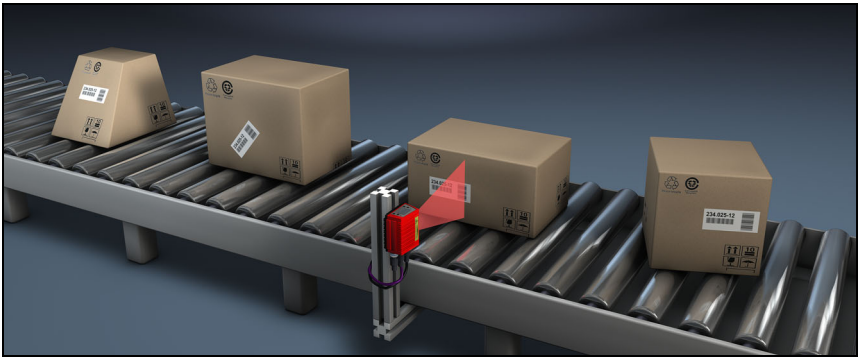

Figure 4.2: Possible barcode orientation

With the BCL 504*i*, configuration is generally performed with the aid of the GSD file.

The BCL 504*i* needs a suitable activation to start a read process as soon as an object is in the reading field. This opens a time window ("reading gate") in the BCL 504*i* for the read process during which the barcode reader has time to detect and decode a barcode.

In the basic setting, triggering takes place through an external reading cycle signal or via the PROFIBUS. An alternative option for activation is the **autoRefIAct** function.

Through the read operation, the BCL 504*i* collects additional useful pieces of data for diagnosis which can also be transmitted to the host. The quality of the read operation can be inspected using the **alignment mode** which is integrated in the webConfig tool.

A multi-language display with buttons is used to operate the BCL 504*i* as well as for visualisation purposes. Two LEDs provide additional optical information on the current operating state of the device.

The four freely configurable switching inputs/outputs "SWIO 1 … SWIO 4" can be assigned various functions and control e.g. activation of the BCL 504*i* or external devices, such as a PLC.

System, warning and error messages provide assistance in set-up/troubleshooting during commissioning and read operation.

4.3 Device construction

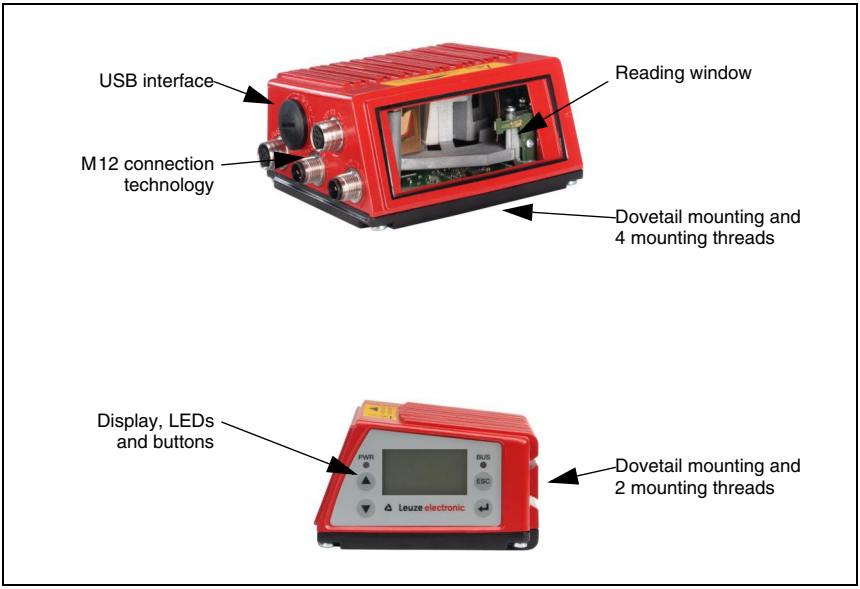

Figure 4.3: Device construction

4.4 Reading techniques

4.4.1 Line scanner (single line)

A line (scan line) scans the label. Due to the opt. opening angle, the reading field width is dependent on the read distance. Through the movement of the object, the entire barcode is automatically transported through the scan line.

The integrated code fragment technology permits twisting of the barcode (tilt angle) within certain limits. These are dependent on the transport speed, the scanning rate of the scanner and the barcode properties.

Areas of application of the line scanner

The line scanner is used:

- when the bars of the barcode are printed in the conveying direction ('ladder arrangement').
- with barcodes having very short bar lengths.
- when the ladder code is turned out of the vertical position (tilt angle).
- when the scanning distance is large.

Figure 4.4: Deflection principle for the line scanner

4.4.2 Line scanner with oscillating mirror

The oscillating mirror deflects the scan line additionally to both sides across the scan direction at a randomly adjustable oscillation frequency. In this way, the BCL 504*i* can also scan larger areas or spaces for barcodes. The reading field height (and the scan line length useful for evaluation) depends on the reading distance due to the optical beam width of the oscillating mirror.

Areas of application of the line scanner with oscillating mirror

For line scanners with oscillating mirror, oscillation frequency, start/stop position etc. are adjustable. It is used:

- when the position of the label is not fixed, e.g. on pallets – various labels can, thus, be detected at various positions.
- when the bars of the barcode are printed perpendicular to the conveying direction ('picket fence arrangement').
- when reading stationary objects.
- when the barcode is turned out of the horizontal position.
- when the scanning distance is large.
- when a large reading field (reading window) has to be covered.

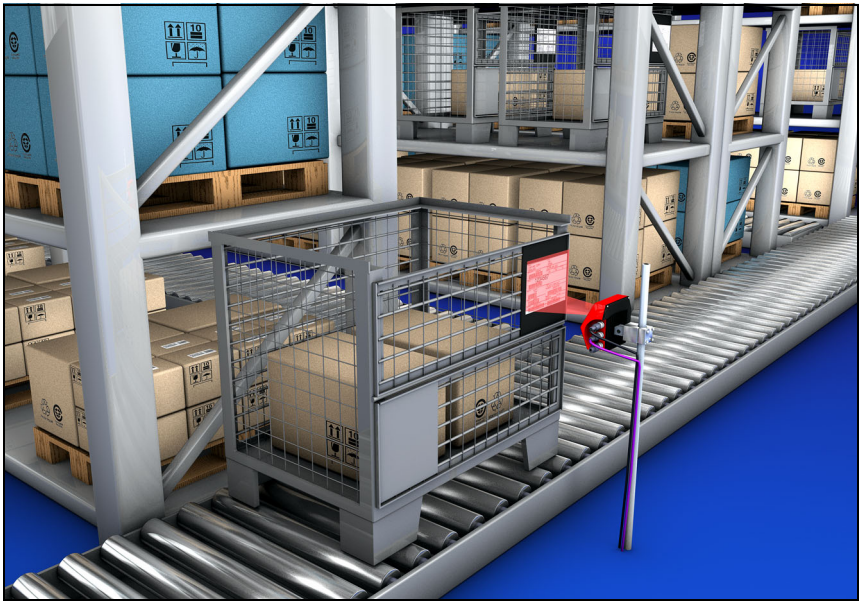

Figure 4.5: Deflection principle for the line scanner with oscillating mirror add-on

4.4.3 Omnidirectional reading

In order to read arbitrarily oriented barcodes on an object, at least 2 barcode readers are necessary. If the barcode is not printed over-square, i.e. bar length > code length, barcode readers with integrated code fragment technology are necessary.

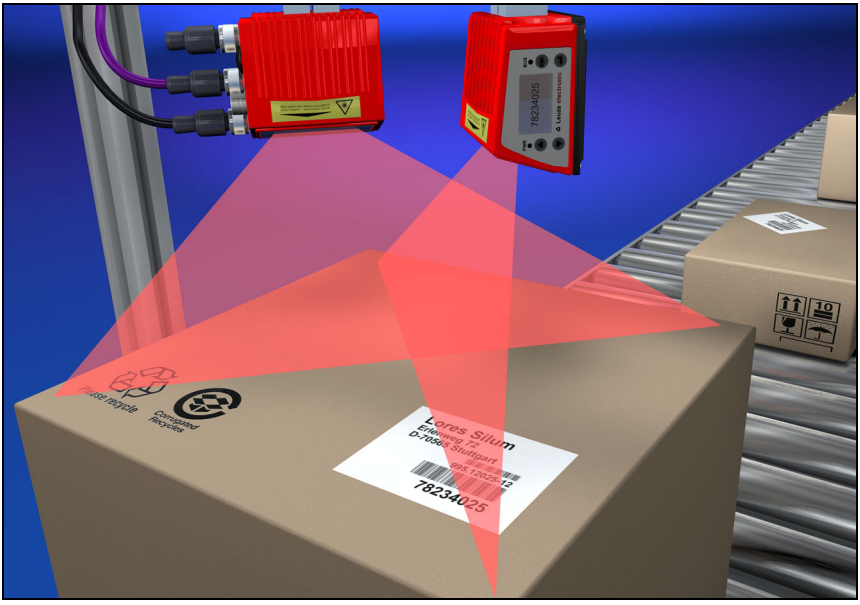

Figure 4.6: Principle arrangement for omnidirectional reading

4.5 Fieldbus systems

Various product variants of the BCL 500*i* series are available for connecting to different fieldbus systems such as PROFIBUS DP, ProfiNet and Ethernet.

4.5.1 PROFIBUS DP

The BCL 504*i* is designed as a PROFIBUS device (PROFIBUS DP-V1 acc. to IEC 61158) with a baud rate of max. 12MBd. The functionality of the device is defined via parameter sets which are clustered in modules. These modules are contained in a GSD file.

The BCL 504*i* barcode readers can be operated as network devices on the PROFIBUS. The BCL 504*i* features multiple M12 connectors / sockets for the electrical connection of the supply voltage, the interface and the switching inputs and outputs.

The BCL 504*i* supports:

- PROFIBUS-DP slave functionality.
- Modular structure of the IO data
- Automatic baud rate detection up to 12 Mbit/s
- SYNC/FREEZE
- FailSafe Mode
- Device-specific diagnostic data
- I&M
- No changing of the slave address via the PROFIBUS

For further details, see chapter 10!

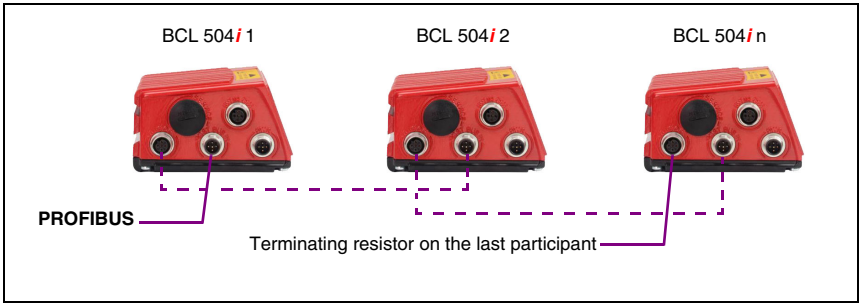

Figure 4.7: PROFIBUS DP

4.6 Heater

For low-temperature applications to min. -35°C (e.g. in cold storage), the barcode readers of the BCL 504*i* series can optionally be permanently fitted with a built-in heating and these barcode readers purchased as separate device models.

4.7 External parameter memory

The optionally available external parameter memory – based on a USB memory stick (compatible with version 1.1) – is housed in an external hood with integrated connectors which cover the USB service interface when installed (IP 65). By having available a copy of the current parameter set of the BCL 504*i*, the external parameter memory makes it easy and reduces the time needed to replace the BCL 504*i* on site. A manual configuration of the exchanged device is thereby omitted.

During operation of the BCL 504*i* on the PROFIBUS, the parameters are stored in the PLC. It is not necessary to use the external parameter memory in this case.

The delivery contents of the external parameter memory include the hood with integrated connectors with unscrewable cover and the USB memory stick.

Figure 4.8: External parameter memory

Notice!

To mount, the cover of the hood with integrated connectors must be unscrewed. The tube is then screwed onto the USB connection on the BCL 504i after which the USB memory stick is plugged into the connection and the hood with integrated connectors closed with the cover in order to ensure protection class IP 65.

4.8 autoReflAct

AutoReflAct stands for **Auto**matic **Refl**ector **Act**ivation and permits an activation without additional sensors. This is achieved by directing the scanner with reduced scanning beam towards a reflector mounted behind the conveyor path. As long as the scanner is targeted at the reflector, the reading gate remains closed. If, however, the reflector is blocked by an object such as a container with a barcode label, the scanner activates the read procedure, and the label on the container is read. When the path from the scanner to the reflector has cleared, the read procedure has completed and the scanning beam is reduced and again directed onto the reflector. The reading gate is closed.

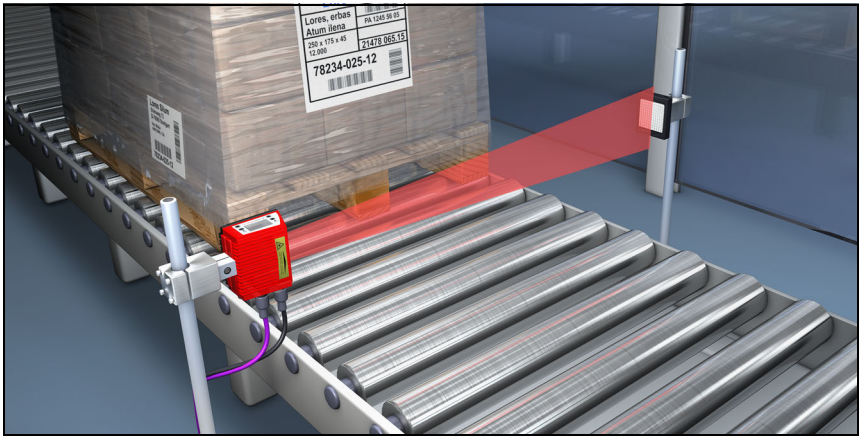

Figure 4.9: Reflector arrangement for autoReflAct

The **autoReflAct** function uses the scanning beam to simulate a photoelectric sensor and thus permits an activation without additional sensory mechanism.

4.9 Reference codes

The BCL 504*i* offers the possibility of storing one or two reference codes.

It is possible to store the reference codes by means of teach-in (display command), via the webConfig tool or via the PROFIBUS.

The BCL 504*i* can compare read barcodes with one and/or both reference codes and execute user-configurable functions depending on the comparison result.

4.10 autoConfig

With the autoConfig function, the BCL 504*i* offers the user who only wishes to simultaneously read one code type (symbology) with one number of digits an extremely simple and convenient configuration option.

After starting the autoConfig function via the display, switching input or from a primary control, it is sufficient to position a barcode label with the desired code type and number of digits in the reading field of the BCL 504*i*.

Afterward, barcodes with the same code type and number of digits are recognised and decoded.

5 Specifications

5.1 General specifications of the barcode readers

5.1.1 Line scanner

Type	BCL 504*i* PROFIBUS DP
Type	**Line scanner without heating**
Optical data	
Light source	laser diode λ = 650nm / 655nm (red light)
Beam exit	front
Scanning rate	1000 scans/s (adjustable in the range 800 … 1200 scans/s)
Beam deflection	by means of rotating polygon wheel
Useful opening angle	max. 60°
Optics models / resolution	High Density (**N**): 0.25 … 0.5mm Medium Density (**M**): 0.35 … 0.8mm Low Density (**F**): 0.5 … 1.0mm Ultra Low Density (**L**): 0,7 … 1,0mm
Read distance	see reading field curves
Laser safety class	2 acc. to EN 60825-1, CDRH (U.S. 21 CFR 1040.10)
Barcode data	
Code types	2/5 Interleaved, Code 39, Code 128, EAN 128, EAN / UPC, Codabar, Code 93, RSS 14
Barcode contrast (PCS)	>= 60%
External light tolerance	2000 lx (on the barcode)
Number of barcodes per scan	6
Electrical data	
Interface type	1x RS 485 at 2x M12 (B)
Protocols	PROFIBUS DP
Baud rate	9.6Kbaud … 12MBaud
Data formats	Slave DPV1
Service interface	USB 1.1 compatible, A-coded
Switching input / switching output	4 switching inputs/outputs, freely programmable functions - Switching input: 10 … 30VDC depending on supply voltage, I max. = 8mA - Switching output: 10 … 30VDC, depending on supply voltage, I max. = 100mA (short-circuit proof) Switching inputs/outputs are protected against polarity reversal!
Operating voltage	10 … 30VDC (Class II, Safety Class III)
Power consumption	max. 10W
Operating and display elements	
Display	monochromatic graphical display, 128 x 64 pixel, with background lighting
Keyboard	4 buttons
LEDs	2 LEDs for power (PWR) and bus state (BUS), two-coloured (red/green)

Table 5.1: Specifications of the BCL 504*i* line scanners without heating

Type	BCL 504*i* PROFIBUS DP
Type	**Line scanner without heating**
Mechanical data	
Protection class	IP 65 (with screwed-on M12 connectors or mounted caps)
Weight	1.1 kg
Dimensions (WxHxD)	63 x 123.5 x 106.5 mm
Housing	diecast aluminium
Environmental data	
Operating temperature range	0°C … +40°C
Storage temperature range	-20°C … +70°C
Air humidity	max. 90% rel. humidity, non-condensing
Vibration	IEC 60068-2-6, test FC
Shock	IEC 60068-2-27, test Ea
Continuous shock	IEC 60068-2-29, test Eb
Electromagnetic compatibility	EN 55022; IEC 61000-6-2 (contains IEC 61000-4-2, -3, -4, -5 and -6) 1)

Table 5.1: Specifications of the BCL 504*i* line scanners without heating

1) This is a Class A product. In a domestic environment this product may cause radio interference, in which case the operator may be required to take adequate measures.

Attention!

For UL applications, use is permitted exclusively in Class 2 circuits according to NEC (National Electric Code).

The BCL 504i barcode readers are designed in accordance with safety class III for supply by PELV (protective extra-low voltage with reliable disconnection).

5.1.2 Oscillating-mirror scanner

Technical data same as for line scanner without heating with the following differences:

Type	BCL 504*i* PROFIBUS DP
Type	**Oscillating-mirror scanner without heating**
Optical data	
Beam exit	Lateral zero position at an angle of 90°
Beam deflection	Via rotating polygon wheel (horizontal) and stepping motor with mirror (vertical)
Oscillation frequency	0 … 10Hz (adjustable, max. frequency is dependent on set swivel angle)
Max. swivel angle	±20°(adjustable)
Reading field height	see reading field curves
Electrical data	
Power consumption	max. 14W
Mechanical data	
Weight	1.5kg
Dimensions (WxHxD)	84 x173 x147mm

Table 5.2: Specifications of the BCL 504*i* oscillating-mirror scanners without heating

5.1.3 Line scanner with deflection mirror

Technical data same as for line scanner without heating with the following differences:

Type	BCL 504*i* PROFIBUS DP
Type	**Line scanner with deflection mirror without heating**
Optical data	
Beam exit	Lateral zero position at an angle of 90°
Beam deflection	Via rotating polygon wheel (horizontal) and deflection mirror (vertical)
Max. optical adjustment range of the beam exit	±10° (adjustable via display or software)
Electrical data	
Power consumption	max. 11W
Mechanical data	
Weight	1.4kg
Dimensions (WxHxD)	84 x173 x147mm

Table 5.3: Specifications of the BCL 504*i* deflection-mirror scanners without heating

5.2 Heating models of the barcode readers

The BCL 504*i* barcode readers are optionally available as models with integrated heating. In this case, heating is permanently installed ex works. Self-installation on-site by the user is not possible!

Features

- Integrated heating (permanently installed)
- Extends the application range of the BCL 504*i* to -35°C
- Supply voltage 24VDC ±20%
- BCL 504*i* enabling through an internal temperature switch (switch-on delay about 30min for 24VDC and minimum ambient temperature of -35°C)
- Necessary conductor cross-section for the voltage supply: at least 0.75mm²; the use of ready-made cables is, thus, not possible.

Construction

The heating consists of two parts:

- The front cover heater
- The housing heater

Function

When the 24VDC supply voltage is applied to the BCL 504*i*, a temperature switch initially only connects the heating to electrical power (front cover heater and housing heater). During the heating phase (around 30min), when the inside temperature rises above 15°C, the temperature switch connects the BCL 504*i* to the supply voltage. This is followed by the self test and the changeover to read operation. The "PWR" LED lights up showing overall readiness for operation.

When the inside temperature reaches approximately 18 °C, another temperature switch turns the housing heater off and, if necessary, back on again (if the inside temperature drops below 15°C). This does not interrupt the read operation. The front cover heater remains activated until an inside temperature of 25°C is reached. At temperatures above this, the front cover heater switches off and, with a switching hysteresis of 3°C, back on again at an inside temperature below 22°C.

Electrical connection

The required core cross-section of the connection cable for the voltage supply must be at least 0.75 mm².

Attention!

The voltage supply must not be looped through from one device to the next.

Power consumption

The energy requirement depends on the model:

- the line scanner with heating typically consumes 40W and a maximum of 50W power.
- the line scanner with oscillating mirror and heating typically consumes 60W and a maximum of 75W.

These values are based on operation with unconnected switching outputs.

5.2.1 Line scanner with heating

Technical data same as for line scanner without heating with the following differences:

Type	**BCL 504*i*** PROFIBUS DP
Type	**Line scanner with heating**
Electrical data	
Operating voltage	24VDC ±20%
Power consumption	max. 50W
Structure of the heating	Housing heating and separate heating of the optics glass
Warmup time	Min. 30min at +24VDC and an ambient temperature of -35°C
Min. conductor cross-section	Conductor cross-section of at least 0.75mm² for the supply-voltage supply line. Wiring through of the voltage supply to multiple heating devices is **not** permissible. Standard, M12 ready-made cable **not** usable (insufficient cable cross-section)
Environmental data	
Operating temperature range	-35°C … +40°C
Storage temperature range	-20°C … +70°C

Table 5.4: Specifications of the BCL 504*i* line scanners with heating

5.2.2 Oscillating-mirror scanner with heating

Technical data same as for line scanner without heating with the following differences:

Type	**BCL 504*i*** PROFIBUS DP
Type	**Oscillating-mirror scanner with heating**
Optical data	
Useful opening angle	max. 50°
Max. swivel angle	±12°(adjustable)
Electrical data	
Operating voltage	24VDC ±20%
Power consumption	max. 75W
Structure of the heating	Housing heating and separate heating of the optics glass
Warmup time	Min. 30min at +24VDC and an ambient temperature of -35°C

Table 5.5: Specifications of the BCL 504*i* oscillating-mirror scanners with heating

Type	BCL 504*i* PROFIBUS DP
Type	**Oscillating-mirror scanner with heating**
Min. conductor cross-section	Conductor cross-section of at least 0.75 mm² for the supply-voltage supply line. Wiring through of the voltage supply to multiple heating devices is **not** permissible. Standard, M12 ready-made cable **not** usable (insufficient cable cross-section)
Environmental data	
Operating temperature range	-35°C … +40°C
Storage temperature range	-20°C … +70°C

Table 5.5: Specifications of the BCL 504*i* oscillating-mirror scanners with heating

5.2.3 Line scanner with deflection mirror and heating

Technical data same as for line scanner without heating with the following differences:

Type	BCL 504*i* PROFIBUS DP
Type	**Deflection mirror scanner with heating**
Optical data	
Useful opening angle	max. 50°
Max. adjustment range	±10°(adjustable via display or software)
Electrical data	
Operating voltage	24 VDC ±20%
Power consumption	max. 75 W
Structure of the heating	Housing heating and separate heating of the optics glass
Warmup time	Min. 30 min at +24 VDC and an ambient temperature of -35°C
Min. conductor cross-section	Conductor cross-section of at least 0.75 mm² for the supply-voltage supply line. Wiring through of the voltage supply to multiple heating devices is **not** permissible. Standard, M12 ready-made cable **not** usable (insufficient cable cross-section)
Environmental data	
Operating temperature range	-35°C … +40°C
Storage temperature range	-20°C … +70°C

Table 5.6: Specifications of the BCL 504*i* deflection-mirror scanners with heating

5.3 Dimensioned drawings

5.3.1 Line scanner with / without heating

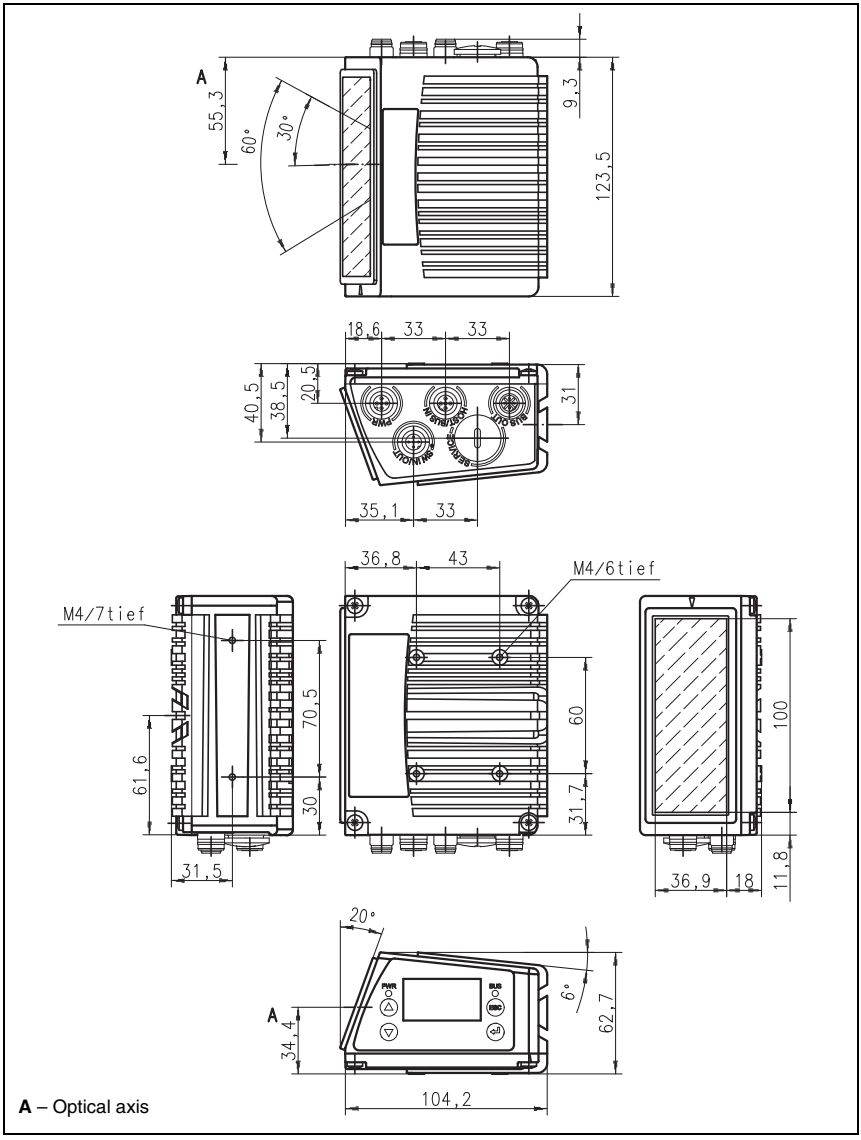

Figure 5.1: Dimensioned drawing BCL 504*i* line scanner S…102

5.3.2 Deflection mirror scanner with / without heating

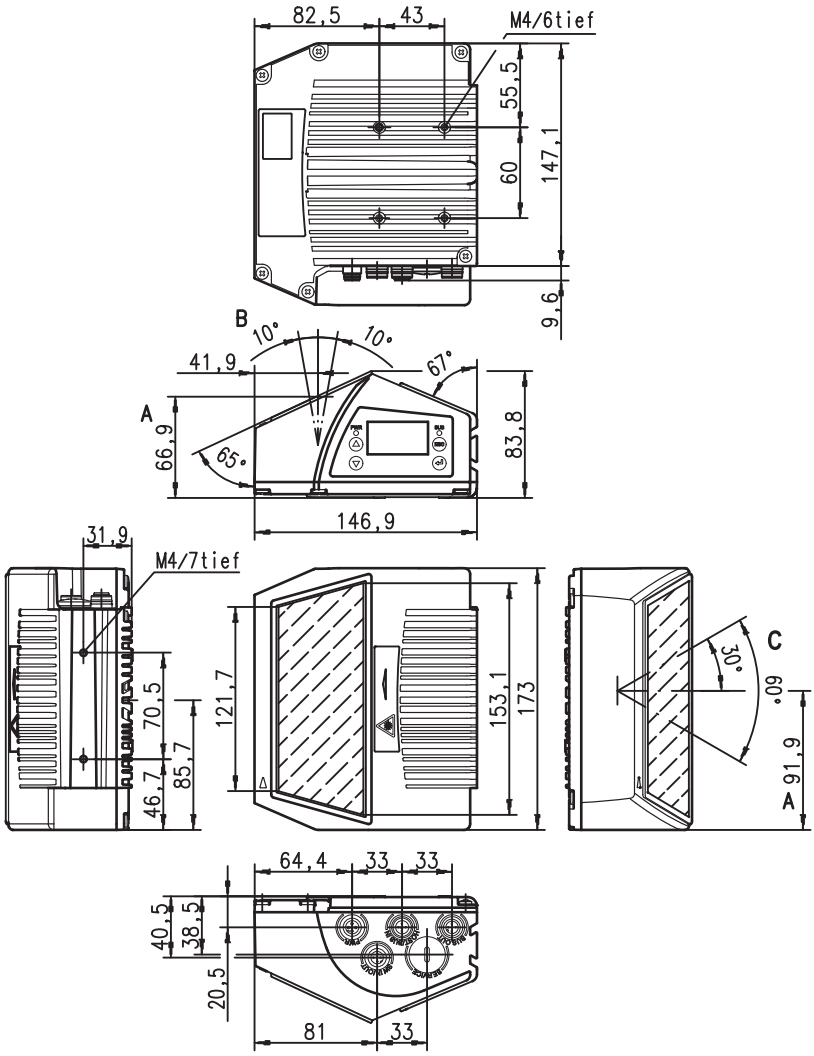

A – Optical axis
B – Optical adjustment range
C – Opening angle
The opening angle is reduced on devices with heating, see "Reading field curves for heating devices" on page 52.

Figure 5.2: Dimensioned drawing BCL 504*i* deflection-mirror scanner S…100

5.3.3 Oscillating-mirror scanner with / without heating

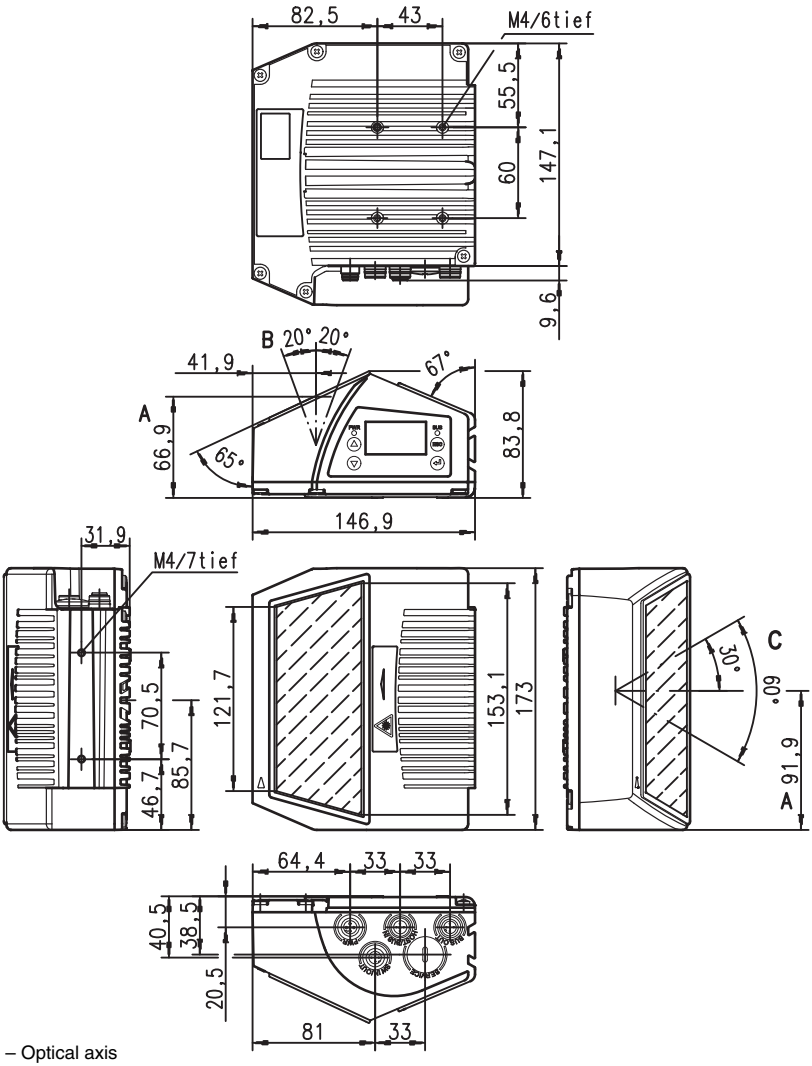

A – Optical axis
B – Optical swivel range
C – Opening angle
The optical swivel range and the opening angle are reduced on devices with heating, see "Reading field curves for heating devices" on page 52.

Figure 5.3: Dimensioned drawing BCL 504*i* oscillating-mirror scanner O…100

5.4 Type overview BCL 504*i*

BCL 504i series

(PROFIBUS DP with 1x RS 485 interface at 2x M12 B-coded connectors)

Type designation	Description	Part No.
High Density Optics (m = 0.25 … 0.5mm)		
BCL 504*i* SN 100	Line scanner with deflection mirror	501 05489
BCL 504*i* SN 102	Line scanner, beam exit at the front	501 05490
BCL 504*i* ON 100	Oscillating-mirror scanner	501 05491
BCL 504*i* SN 100 H	Line scanner with deflection mirror, with heating	501 05492
BCL 504*i* SN 102 H	Line scanner, beam exit at the front, with heating	501 05493
BCL 504*i* ON 100 H	Oscillating-mirror scanner with heating	501 05494
Medium Density Optics (m = 0.35 … 1.0mm)		
BCL 504*i* SM 100	Line scanner with deflection mirror	501 05495
BCL 504*i* SM 102	Line scanner, beam exit at the front	501 05496
BCL 504*i* OM 100	Oscillating-mirror scanner	501 05497
BCL 504*i* SM 100 H	Line scanner with deflection mirror, with heating	501 05498
BCL 504*i* SM 102 H	Line scanner, beam exit at the front, with heating	501 05499
BCL 504*i* OM 100 H	Oscillating-mirror scanner with heating	501 05500
Low Density Optics (m = 0.5 … 1.0mm)		
BCL 504*i* SF 100	Line scanner with deflection mirror	501 05501
BCL 504*i* SF 102	Line scanner, beam exit at the front	501 05502
BCL 504*i* OF 100	Oscillating-mirror scanner	501 05503
BCL 504*i* SF 100 H	Line scanner with deflection mirror, with heating	501 05504
BCL 504*i* SF 102 H	Line scanner, beam exit at the front, with heating	501 05505
BCL 504*i* OF 100 H	Oscillating-mirror scanner with heating	501 05506
Ultra Low Density Optics (m = 0.7 … 1.0mm)		
BCL 504*i* SL 102	Line scanner, beam exit at the front	501 09896
BCL 504*i* OL 100	Oscillating-mirror scanner	501 09897
BCL 504*i* SL 102 H	Line scanner, beam exit at the front, with heating	501 09899
BCL 504*i* OL 100 H	Oscillating-mirror scanner with heating	501 09900

Table 5.7: Type overview BCL 504*i*

5.5 Reading field curves / optical data

Barcode characteristics

Notice!

Please note that the size of the barcode module influences the maximum reading distance and the width of the reading field. Therefore, when selecting a mounting location and/or the barcode label, take into account the different reading characteristics of the scanner with various barcode modules.

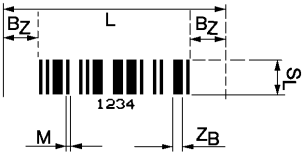

M = Module: The narrowest line or space of a barcode in mm

Z_B = Wide element: Wide lines and spaces are a multiple (ratio) of the module.
Module x Ratio = Z_B (Normal Ratio 1 : 2.5)

B_Z = Quiet zone: The quiet zone should be at least 10 times the module, but not less than 2.5 mm.

L = Code length: The length of the barcode in mm including the start and stop characters. The quiet zone is included depending on the code definition.

S_L = Bar length: Height of the elements in mm

Figure 5.4: The most important characteristics of a barcode

The range in which the barcode can be read by the BCL 504*i* (the so-called reading field) depends on the quality of the printed barcode and its dimensions.

Therefore, above all, the module of a barcode is decisive for the size of the reading field.

Notice!

A rule of thumb: The smaller the module of the barcode is, the smaller the maximum reading distance and reading field width will be.

5.6 Reading field curves

Notice!

Please notice that the real reading fields are also influenced by factors such as labelling material, printing quality, scanning angle, printing contrast etc., and may thus deviate from the reading fields specified here.

The zero position of the reading distance always refers the front edge of the housing of the beam exit and is shown in figure 5.5 for the two housing types of the BCL 504*i*.

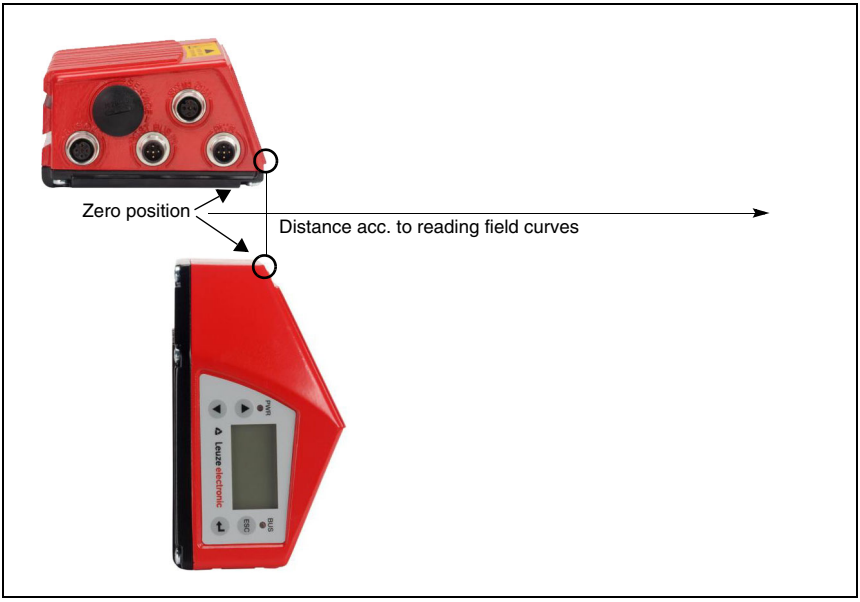

Figure 5.5: Zero position of the reading distance

Reading conditions for the reading field curves

Barcode type	2/5 Interleaved
Ratio	1:2.5
ANSI specification	class A
Reading rate	> 75%

Table 5.8: Reading conditions

5.6.1 High Density (N) Optics: BCL 504*i* SN 100/102

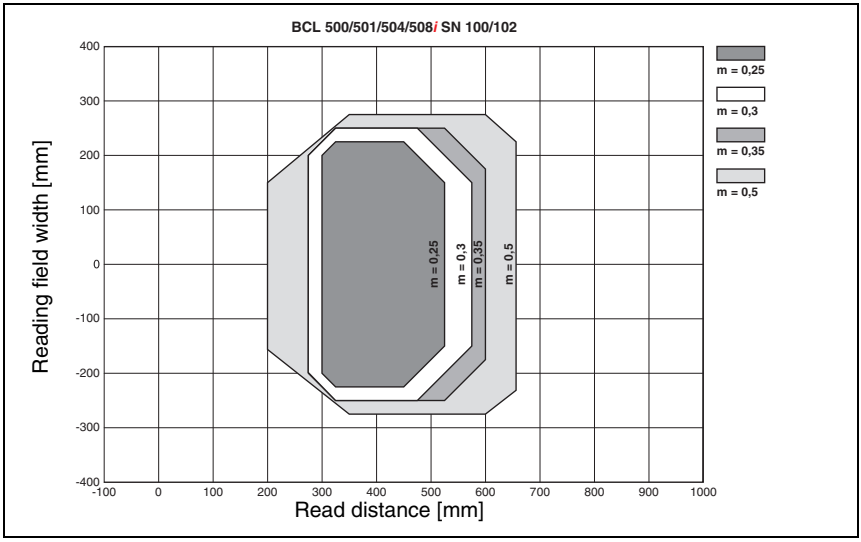

Figure 5.6: "High Density" reading field curve for line scanner (with/without deflection mirror)

The reading field curve applies for the reading conditions stated in table 5.8.

5.6.2 High Density (N) Optics: BCL 504*i* ON 100

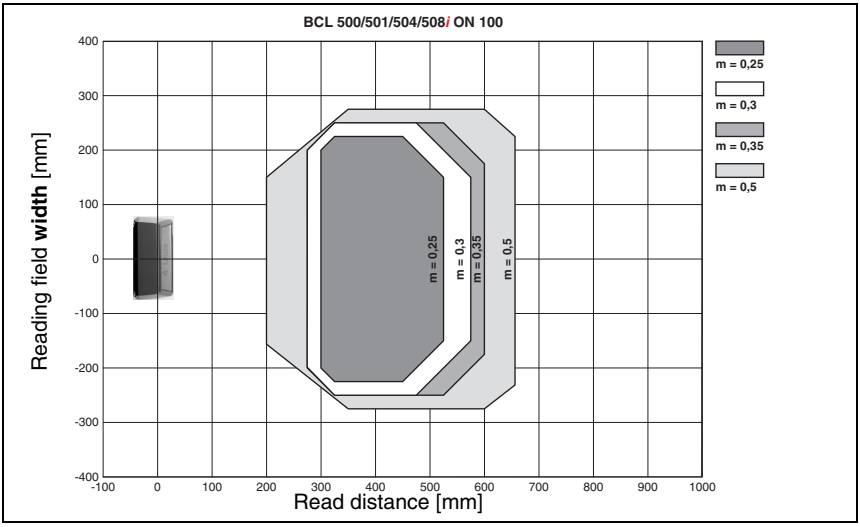

Figure 5.7: "High Density" reading field curve for oscillating-mirror scanners

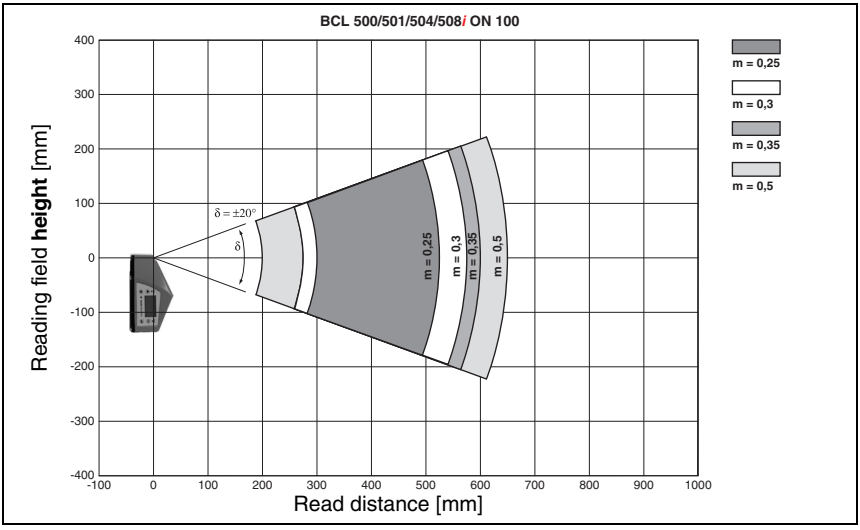

Figure 5.8: Lateral "High Density" reading field curve for oscillating-mirror scanners

The reading field curves apply for the reading conditions stated in table 5.8.

5.6.3 Medium Density (M) Optics: BCL 504*i* SM 100/102

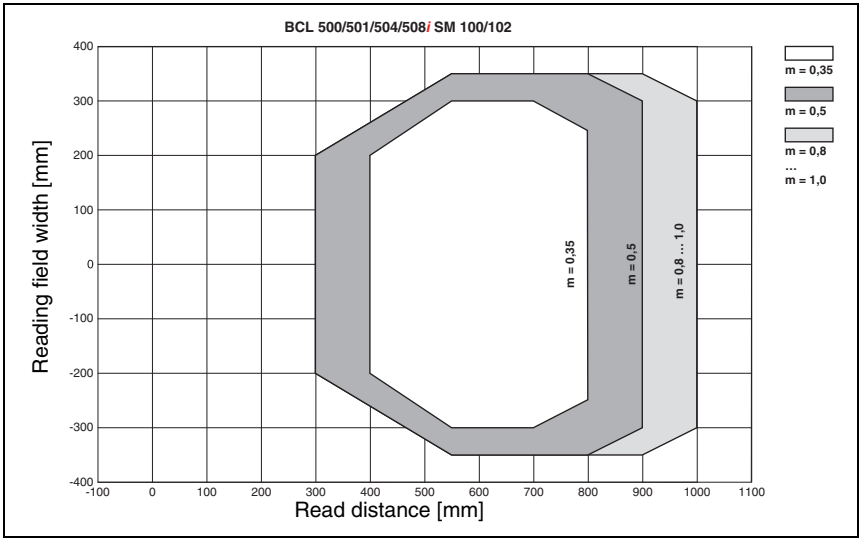

Figure 5.9: "Medium Density" reading field curve for line scanner (with/without deflection mirror)

The reading field curves apply for the reading conditions stated in table 5.8.

5.6.4 Medium Density (M) Optics: BCL 504*i* OM 100

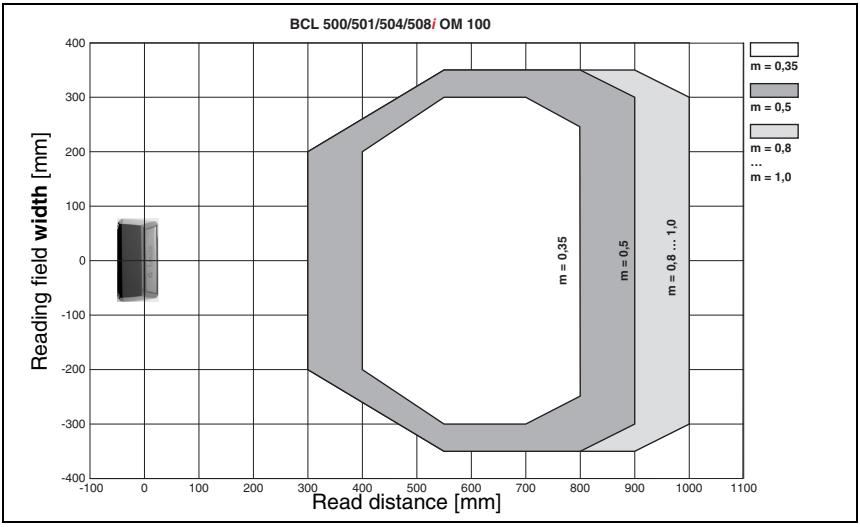

Figure 5.10: "Medium Density" reading field curve for oscillating-mirror scanners

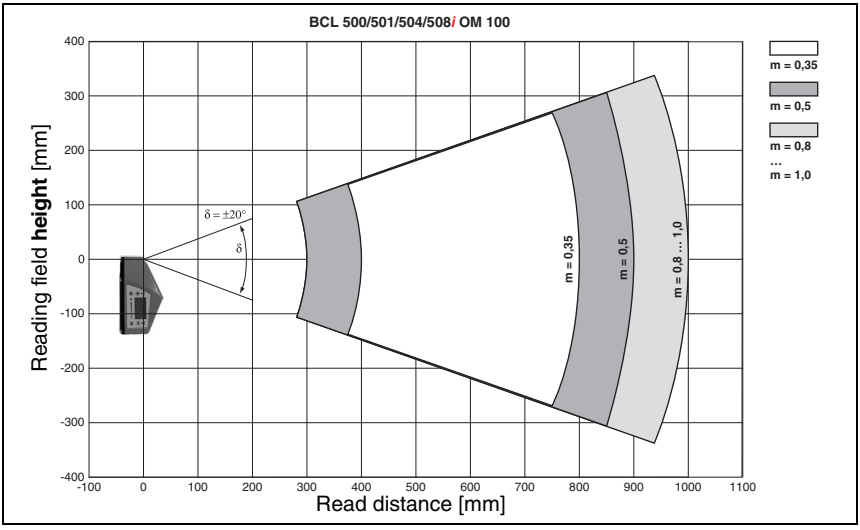

Figure 5.11: Lateral "Medium Density" reading field curve for oscillating-mirror scanners

The reading field curves apply for the reading conditions stated in table 5.8.

5.6.5 Low Density (F) Optics: BCL 504*i* SF 100/102

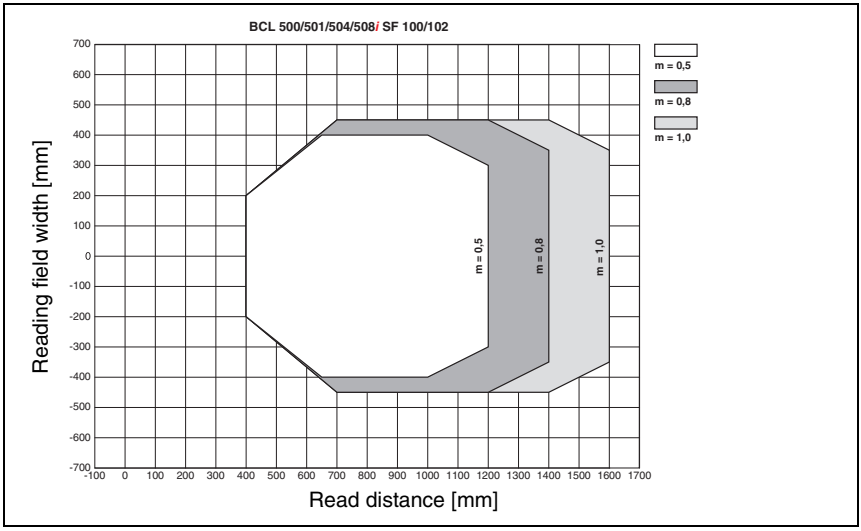

Figure 5.12: "Low Density" reading field curve for line scanner (with/without deflection mirror)

The reading field curves apply for the reading conditions stated in table 5.8.

5.6.6 Low Density (F) Optics: BCL 504*i* OF 100

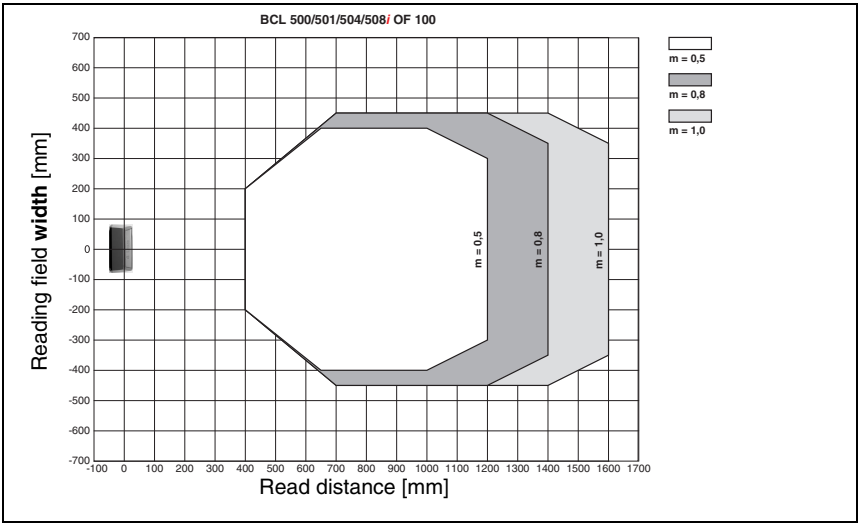

Figure 5.13: "Low Density" reading field curve for oscillating-mirror scanners

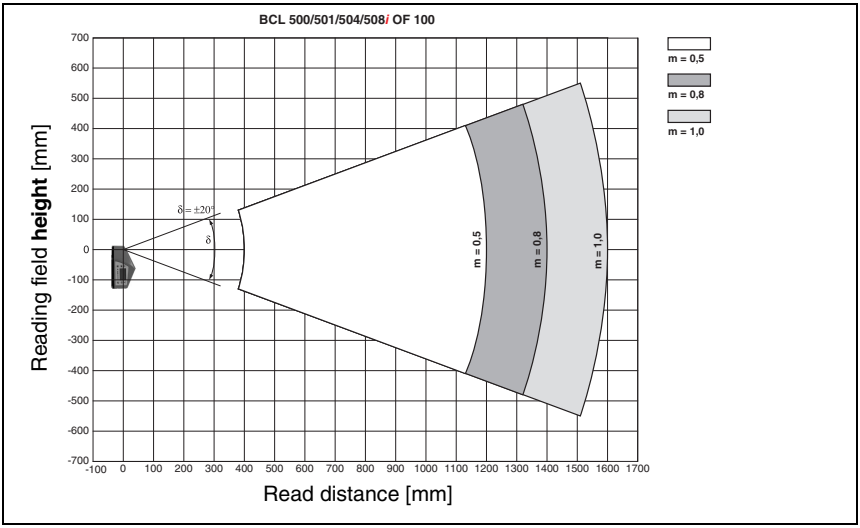

Figure 5.14: Lateral "Low Density" reading field curve for oscillating-mirror scanners

The reading field curves apply for the reading conditions stated in table 5.8.

5.6.7 Ultra Low Density (L) Optics: BCL 504*i* SL 102

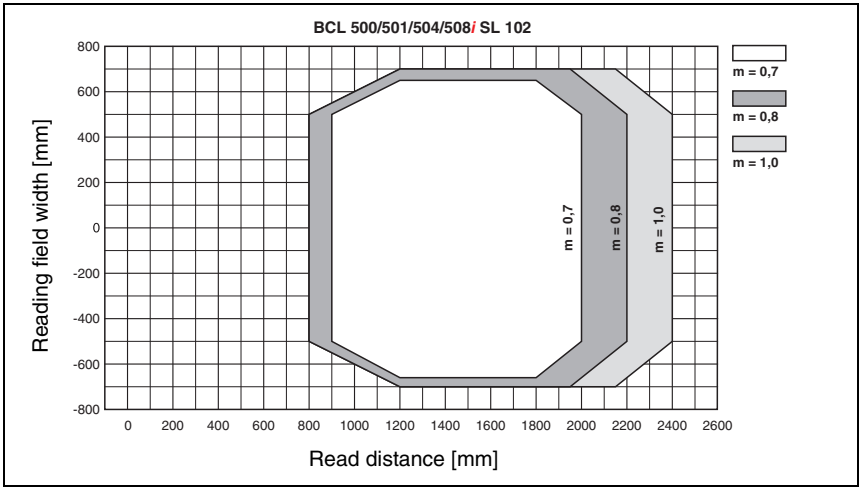

Figure 5.15: "Ultra Low Density" reading field curve for line scanner without deflection mirror

The reading field curves apply for the reading conditions stated in table 5.8.

5.6.8 Ultra Low Density (L) Optics: BCL 504*i* OL 100

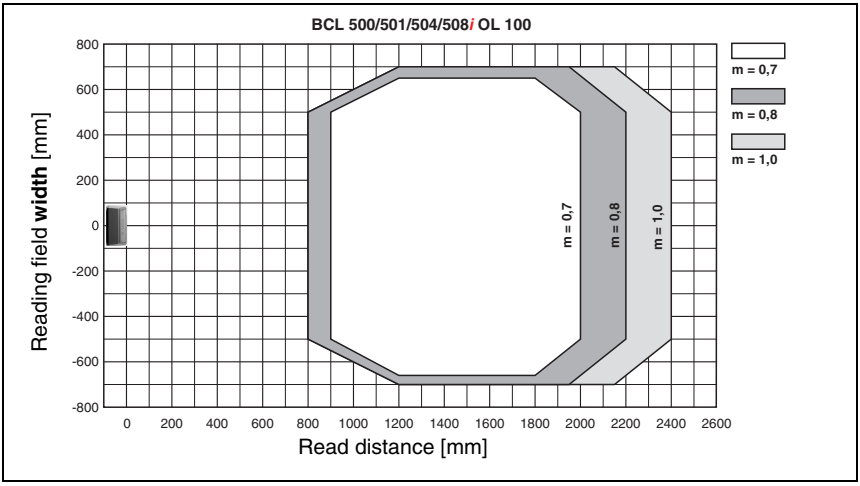

Figure 5.16: "Ultra Low Density" reading field curve for oscillating-mirror scanners

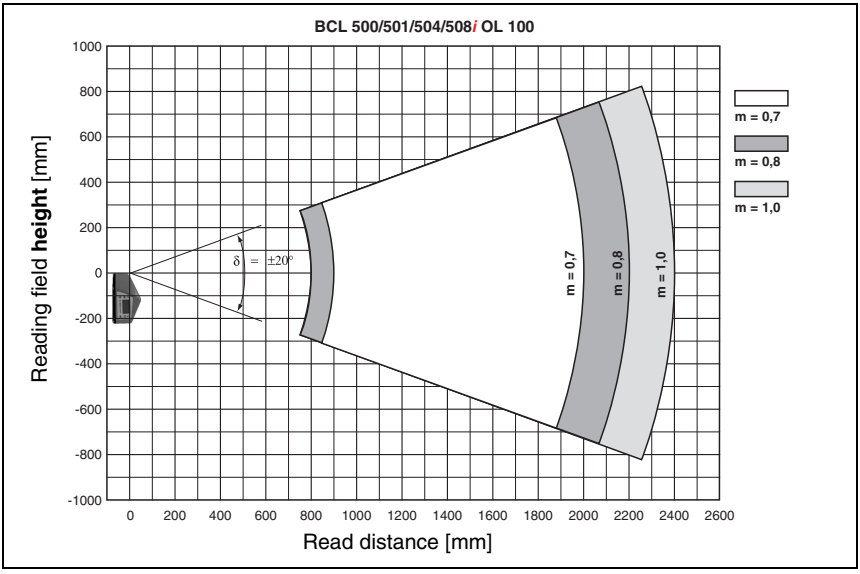

Figure 5.17: Lateral "Ultra Low Density" reading field curve for oscillating-mirror scanners

The reading field curves apply for the reading conditions stated in table 5.8.

5.7 Reading field curves for heating devices

The reading field curves of the heating devices differ to some extent from the normal reading curves due to the optics heating and are somewhat reduced in the reading field width as well as in the reading field height!

- **The maximum opening angle** for all oscillating and deflection mirror devices (BCL 504*i*…**100 H**) **is reduced to ±28°** (without heating = ±30°).
- **In addition, the maximum swivel range** for all oscillating mirror devices (BCL 504*i* **O**…**100 H**) **is reduced to ±12°** (without heating = ±20°). The deflection mirror models (BCL 504*i* **S**…**100 H**) are not affected by this limitation.
- The reading field curves and opening angles are unchanged for all line scanners with heating (BCL 504*i* **S**…**102 H**), .

For details, please refer to the following reading field curves for the heating devices.

5.7.1 High Density (N) Optics: BCL 504*i* SN 102 H

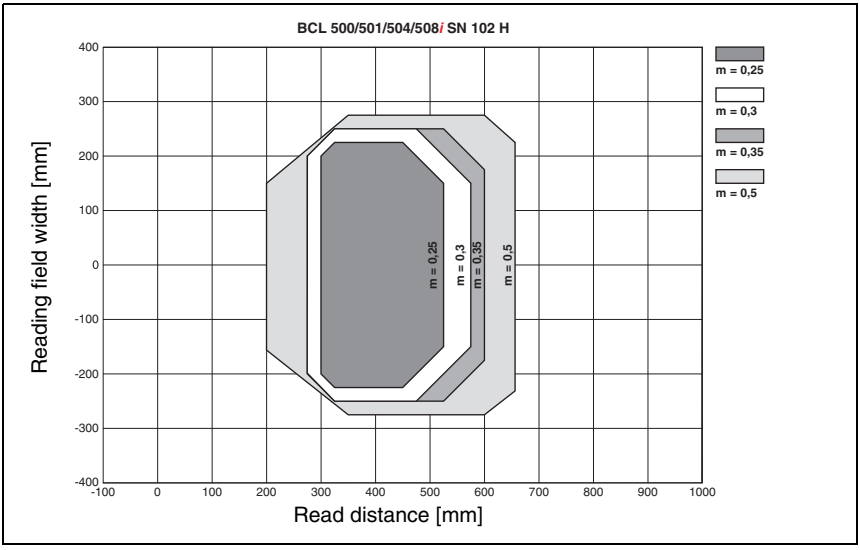

Figure 5.18: "High Density" reading field curve for line scanner with heating (without deflection mirror)

The reading field curve applies for the reading conditions stated in table 5.8.

5.7.2 High Density (N) Optics: BCL 504*i* SN 100 H

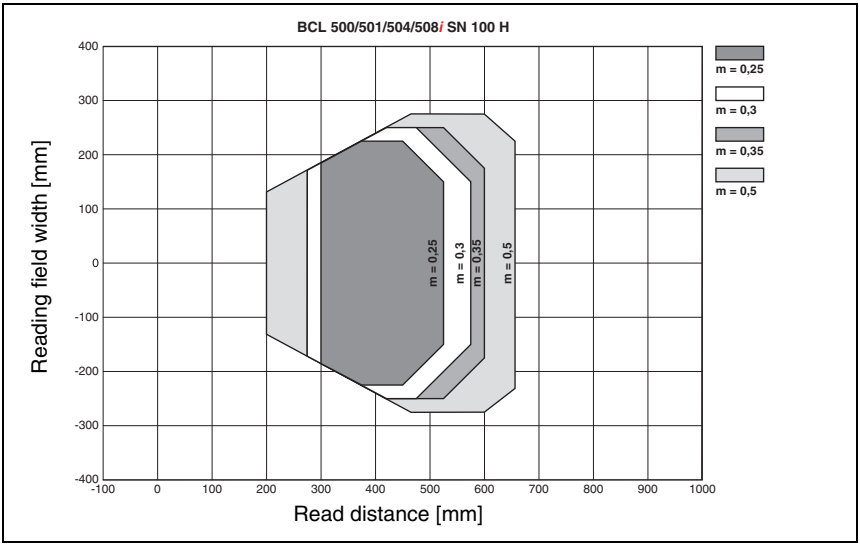

Figure 5.19: "High Density" reading field curve for line scanner with heating (with deflection mirror)

The reading field curve applies for the reading conditions stated in table 5.8.

5.7.3 High Density (N) Optics: BCL 504*i* ON 100 H

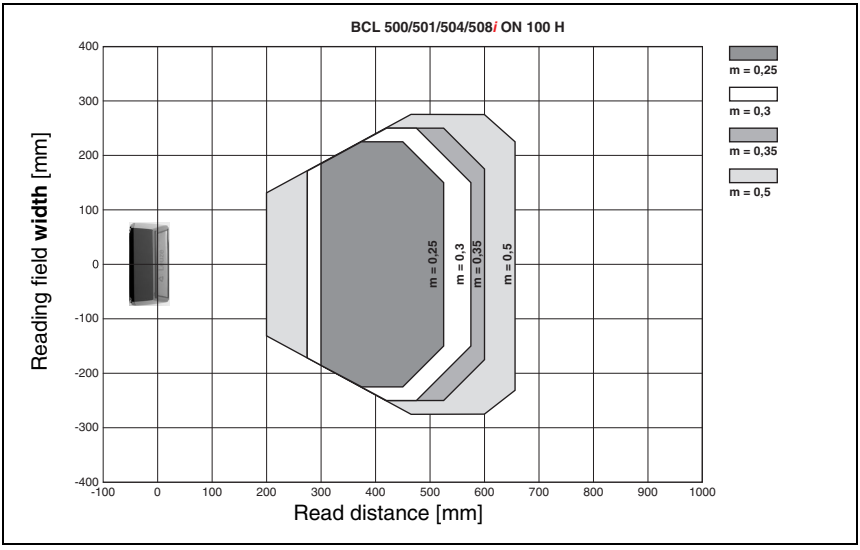

Figure 5.20: "High Density" reading field curve for oscillating-mirror scanners with heating

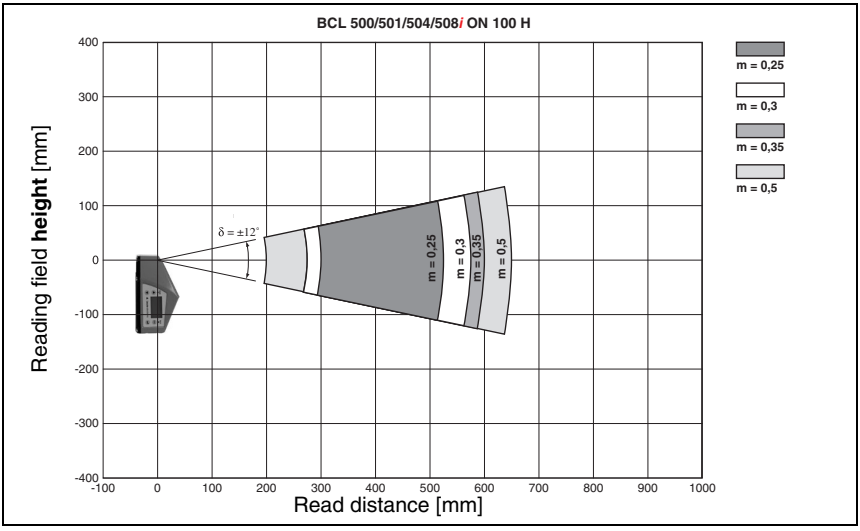

Figure 5.21: Lateral "High Density" reading field curve for oscillating-mirror scanners with heating

The reading field curves apply for the reading conditions stated in table 5.8.

5.7.4 Medium Density (M) Optics: BCL 504*i* SM 102 H

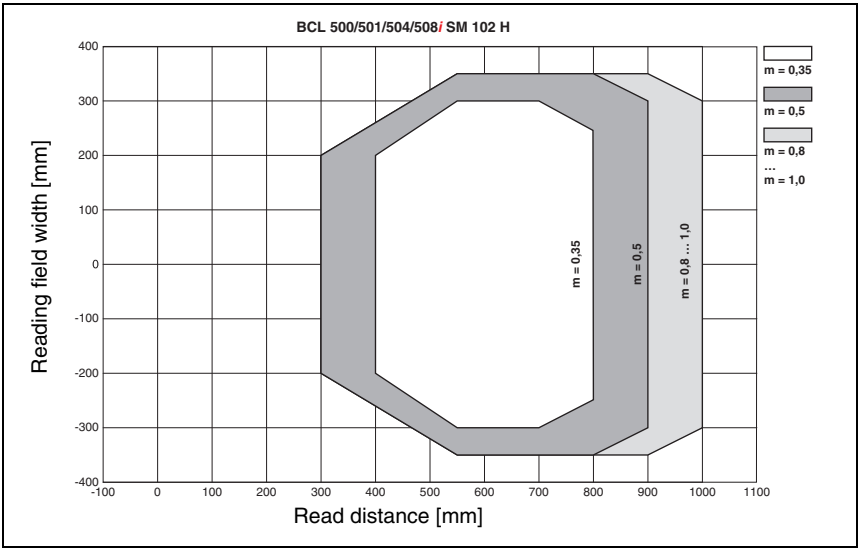

Figure 5.22: "Medium Density" reading field curve for line scanner with heating (without deflection mirror)

The reading field curves apply for the reading conditions stated in table 5.8.

5.7.5 Medium Density (M) Optics: BCL 504*i* SM 100 H

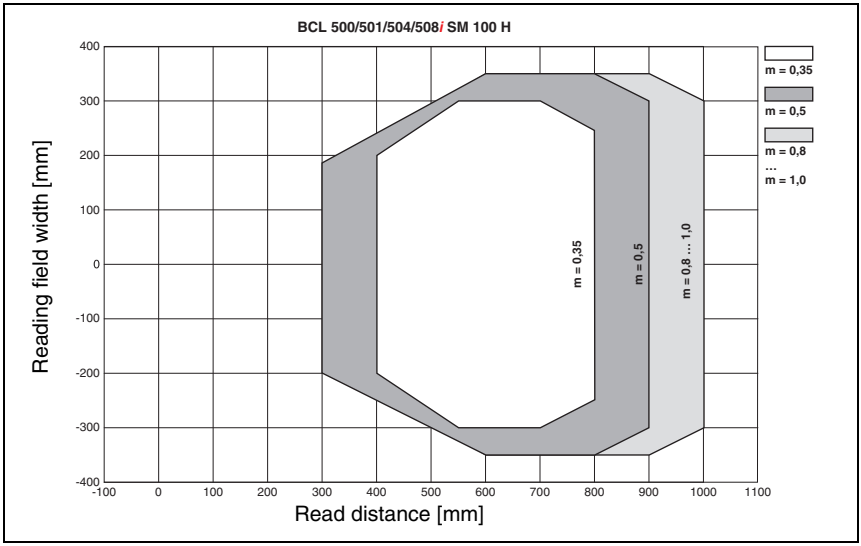

Figure 5.23: "Medium Density" reading field curve for line scanner with heating (with deflection mirror)

The reading field curves apply for the reading conditions stated in table 5.8.

5.7.6 Medium Density (M) Optics: BCL 504*i* OM 100 H

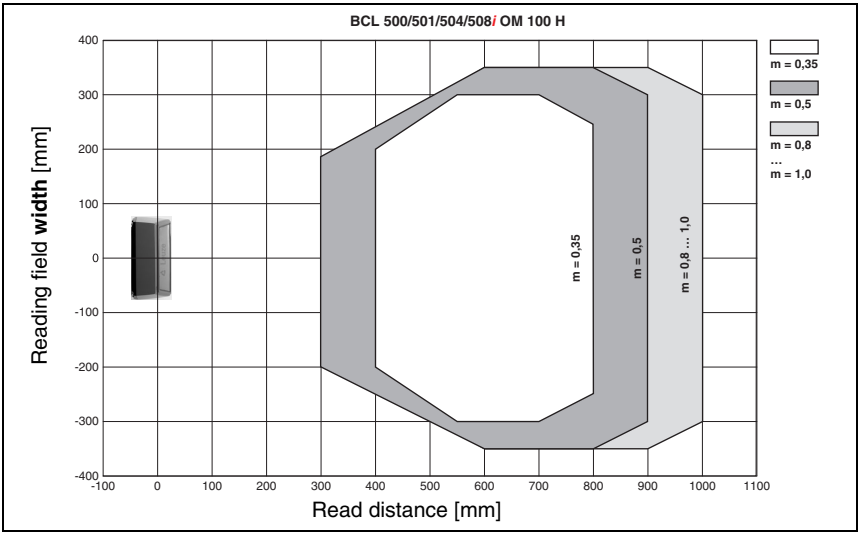

Figure 5.24: "Medium Density" reading field curve for oscillating-mirror scanners with heating

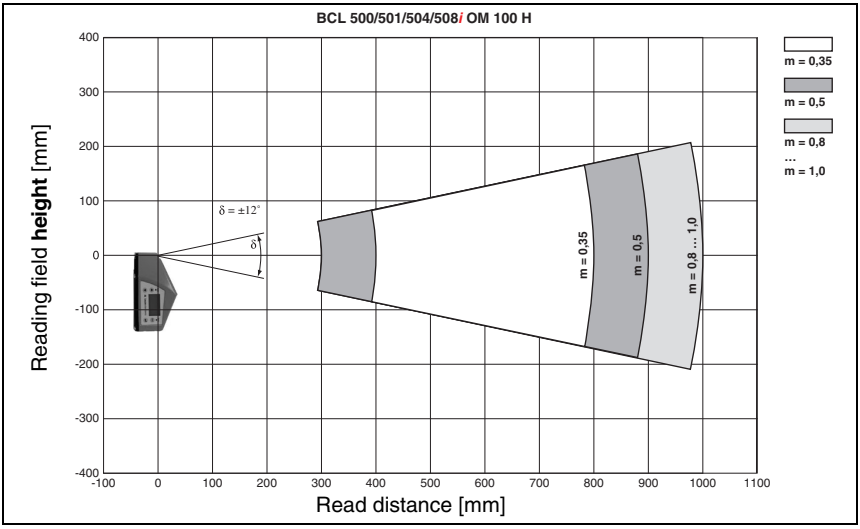

Figure 5.25: Lateral "Medium Density" reading field curve for oscillating-mirror scanners with heating

The reading field curves apply for the reading conditions stated in table 5.8.

5.7.7 Low Density (F) Optics: BCL 504*i* SF 102 H

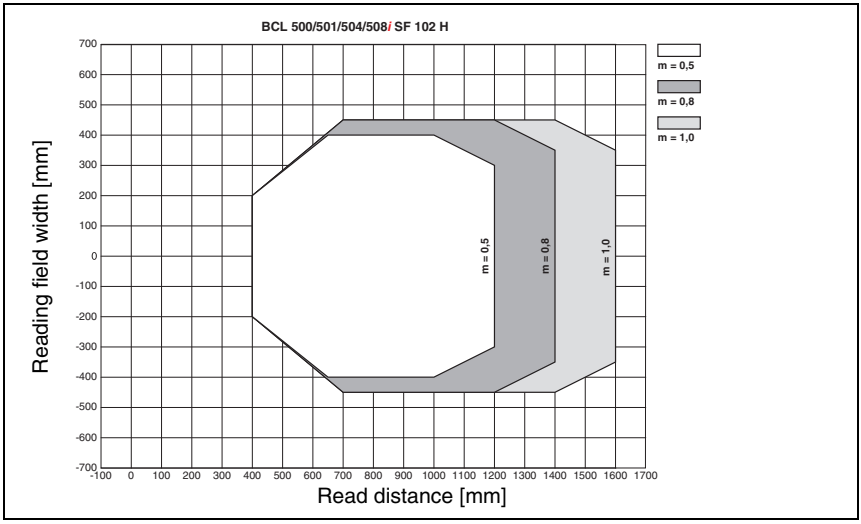

Figure 5.26: "Low Density" reading field curve for line scanner with heating (without deflection mirror)

The reading field curves apply for the reading conditions stated in table 5.8.

5.7.8 Low Density (F) Optics: BCL 504*i* SF 100 H

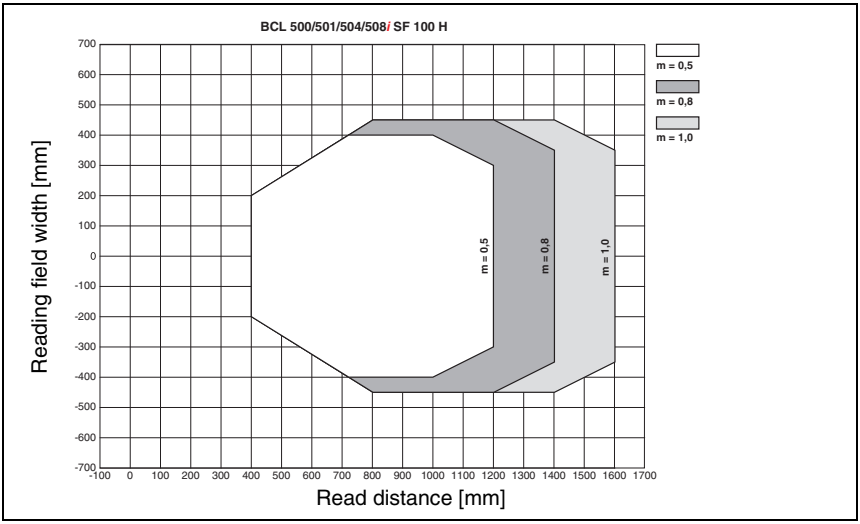

Figure 5.27: "Low Density" reading field curve for line scanner with heating (with deflection mirror)

The reading field curves apply for the reading conditions stated in table 5.8.

5.7.9 Low Density (F) Optics: BCL 504*i* OF 100 H

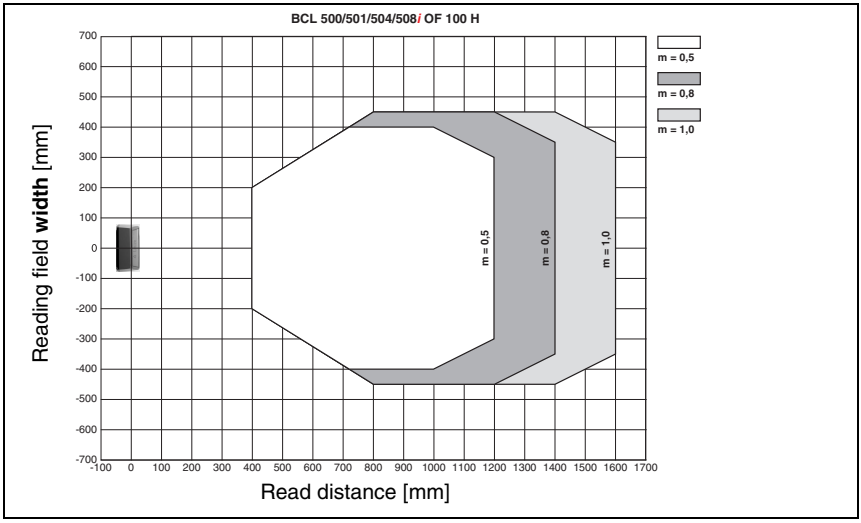

Figure 5.28: "Low Density" reading field curve for oscillating-mirror scanners with heating

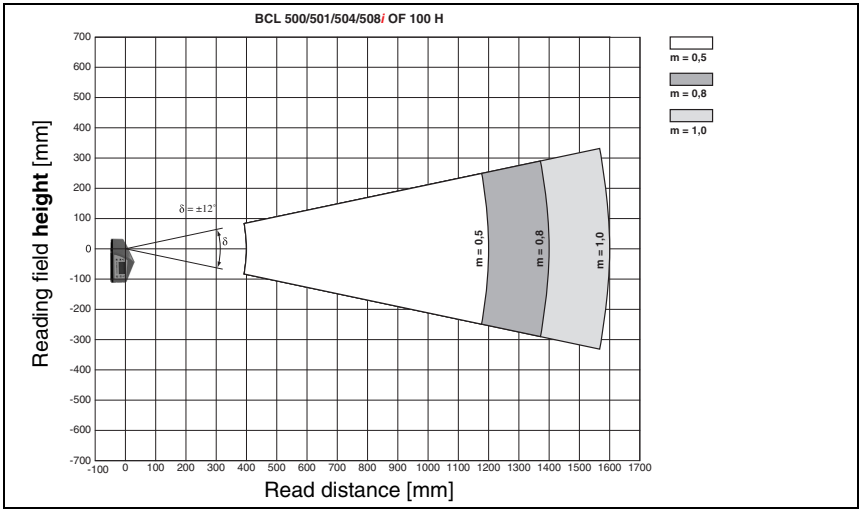

Figure 5.29: Lateral "Low Density" reading field curve for oscillating-mirror scanners with heating

The reading field curves apply for the reading conditions stated in table 5.8.

5.7.10 Ultra Low Density (L) Optics: BCL 504*i* SL 102 H

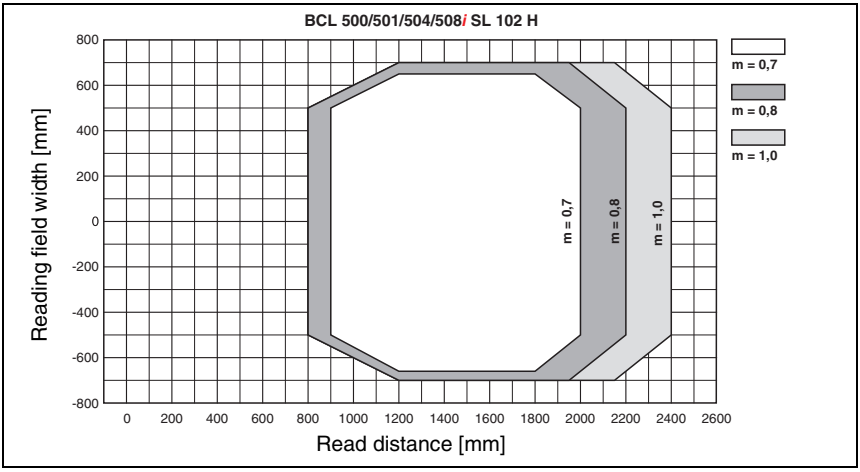

Figure 5.30: "Ultra Low Density" reading field curve for line scanner with heating (without deflection mirror)

The reading field curves apply for the reading conditions stated in table 5.8.

5.7.11 Ultra Low Density (L) Optics: BCL 504*i* OL 100 H

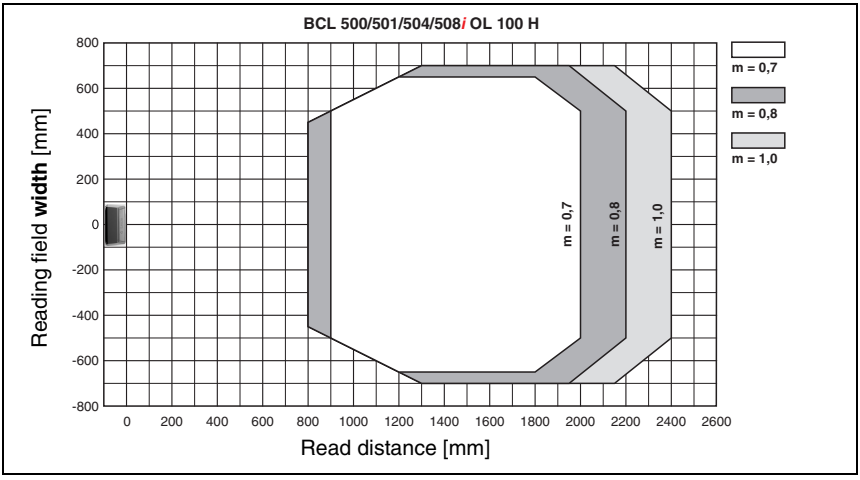

Figure 5.31: "Ultra Low Density" reading field curve for oscillating-mirror scanners with heating

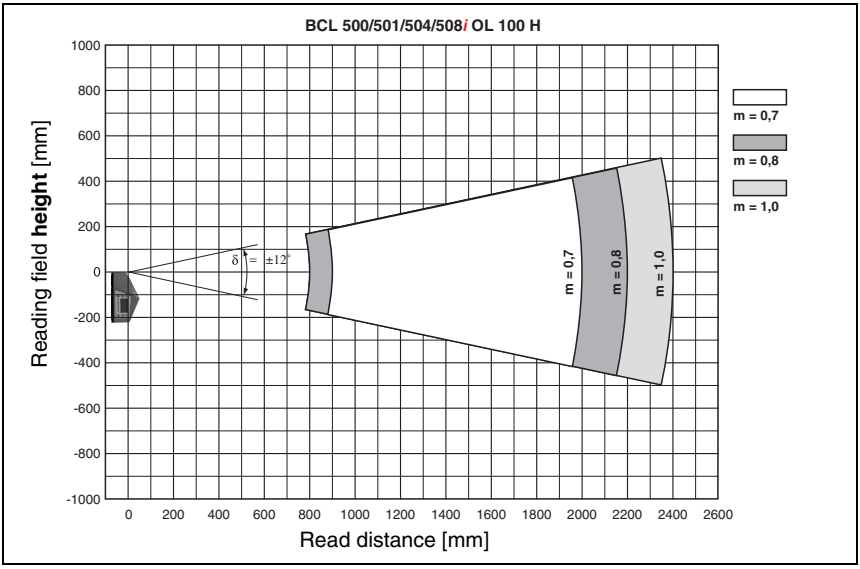

Figure 5.32: Lateral "Ultra Low Density" reading field curve for oscillating-mirror scanners with heating

The reading field curves apply for the reading conditions stated in table 5.8.

6 Installation and mounting

6.1 Storage, transportation

Attention!

When transporting or storing, package the device so that it is protected against collision and humidity. Optimum protection is achieved when using the original packaging. Heed the required environmental conditions specified in the technical data.

Unpacking

- *Check the packaging for any damage. If damage is found, notify the post office or shipping agent as well as the supplier.*
- *Check the delivery contents using your order and the delivery papers:*
  - Delivered quantity
  - Device type and model as indicated on the nameplate
  - Laser warning signs
  - Brief manual

The name plate provides information as to what BCL type your device is. For specific information, please refer to chapter 5.

Name plates of the barcode readers of the BCL 500i series

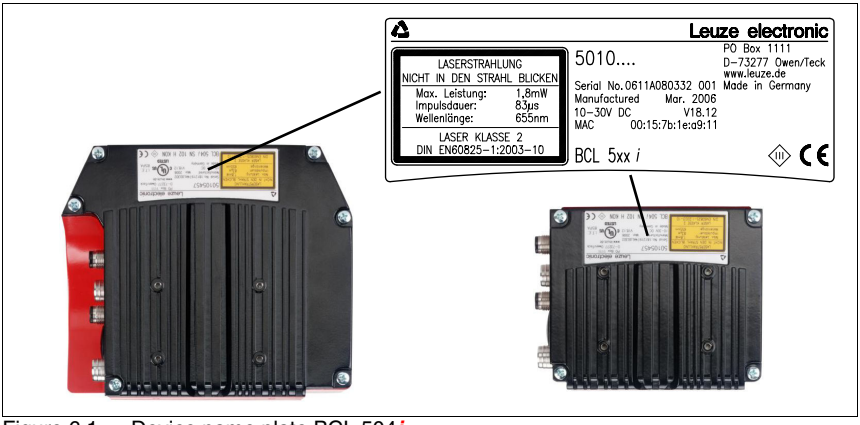

Figure 6.1: Device name plate BCL 504*i*

- *Save the original packaging for later storage or shipping.*

If you have any questions concerning your shipment, please contact your supplier or your local Leuze electronic sales office.

- *Observe the applicable local regulations when disposing of the packaging materials.*

6.2 Mounting the BCL 504*i*

The BCL 504*i* barcode readers can be mounted in two different ways:

- Using two M4x6 screws on the rear of the device or using four M4x6 screws on the bottom of the device.
- Using a BT 56 mounting device on the two fastening grooves.

6.2.1 Fastening with M4 x 6 screws

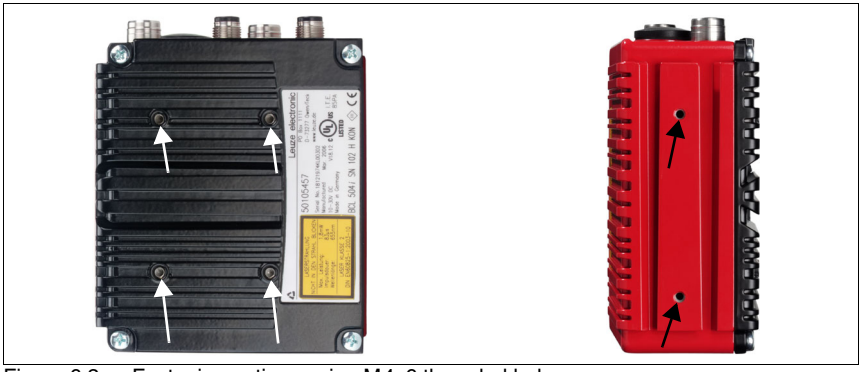

Figure 6.2: Fastening options using M4x6 threaded holes

6.2.2 BT 56 mounting device

The BT 56 mounting device is available for mounting the BCL 504*i* using the fastening grooves. It is designed for rod installation (Ø 16mm to 20mm). For ordering instructions, please refer to chapter "Type overview and accessories" on page 185.

BT 56 mounting device

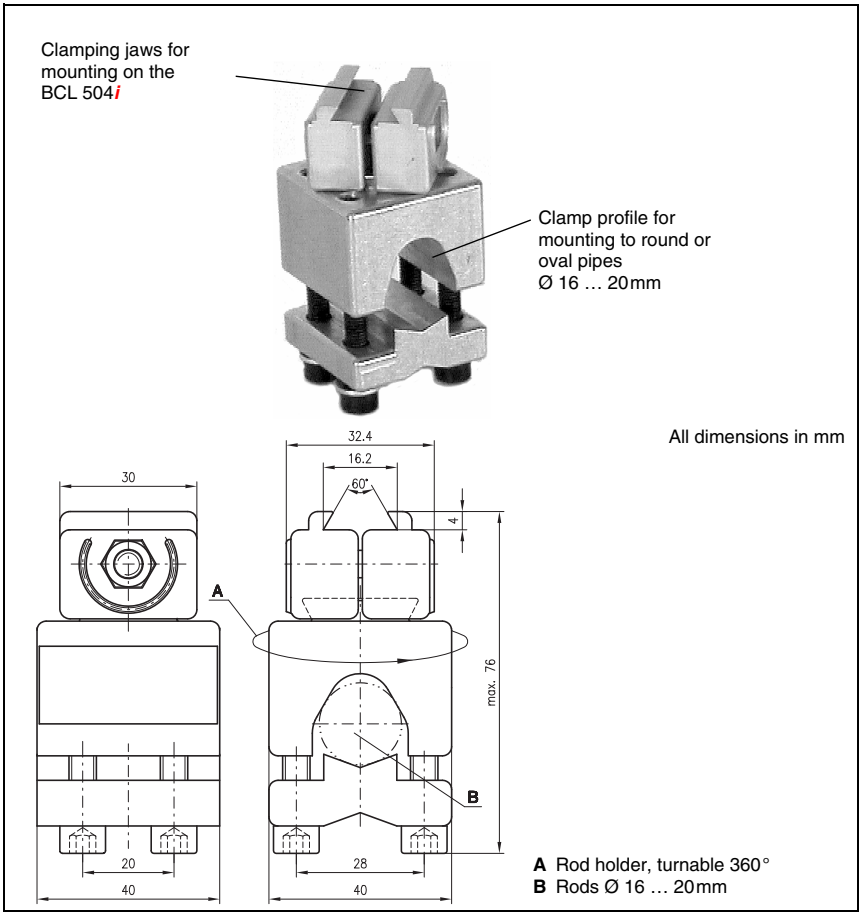

Figure 6.3:BT 56 mounting device

Figure 6.4: Mounting example BCL 504*i*

Notice!

When mounting, ensure that the scanning beam is not reflected directly back to the scanner by the label which is being read. For further information, see the notices in chapter 6.3!: Please refer to chapter 5.6 for the permissible minimum and maximum distances between the BCL 504i and the labels to be read.

6.3 Device arrangement

6.3.1 Selecting a mounting location

In order to select the right mounting location, several factors must be considered:

- Size, orientation, and position tolerance of the barcodes on the objects to be scanned.
- The reading field of the BCL 504*i* in relation to the barcode module width.
- The resulting minimum and maximum reading distance from the respective reading field (see chapter 5.5 "Reading field curves / optical data").
- The permissible line lengths between the BCL 504*i* and the host system depending on which interface is used.
- The correct time for data output. The BCL 504*i* should be positioned in such a way that, taking into consideration the time required for data processing and the conveyor belt speed, there is sufficient time to e.g. initiate sorting operations on the basis of the read data.
- The display and control panel should be very visible and accessible.
- For configuring and commissioning with the webConfig tool, the USB interface should be easily accessible.

For specific information, please refer to chapter 4.4.

Notice!

The beam exits the BCL 504i as follows for the respective devices:
*- line scanner **parallel** to the **housing base***
*- oscillating mirror and deflection mirror **perpendicular** to the **housing base***
The black areas in figure 6.1 are the housing base. The best read results are obtained when:

- *The BCL 504i is mounted in such a way that the scanning beam is incident on the barcode at an angle of inclination greater than ±10° … 15° to vertical.*
- *The reading distance lies in the middle area of the reading field.*
- *The barcode labels are of good print quality and have good contrast ratios.*
- *You do not use high-gloss labels.*
- *There is no direct sunlight.*

6.3.2 Avoiding total reflection – Line scanner

The barcode label must be positioned at an angle of inclination greater than ±10° … 15° from vertical in order to avoid total reflection of the laser beam (see figure 6.5)!

Total reflection occurs whenever the laser light of the barcode reader is directly incident on the surface of the barcode at an angle of 90°. The light directly reflected by the barcode may overload the barcode reader and thereby cause non-readings!

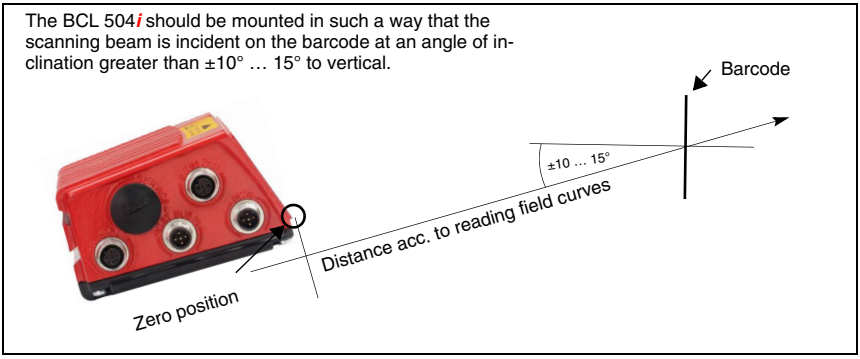

Figure 6.5: Total reflection – line scanner

6.3.3 Avoiding total reflection – oscillating/deflection-mirror scanner

For the BCL 504i with **oscillating/deflection mirror**, the laser beam exits at an angle of **90° to vertical**.

For the BCL 504i with **deflection mirror**, it is also possible to **use software to adjust the direction of the beam by ±10°**.

For the BCL 504i with **oscillating mirror**, the **swivel range of ±20°** (±12° for devices with heating) **is to be taken into account**.

This means that in order to be on the safe side and to avoid total reflection, the BCL 504i with oscillating/deflection mirror must be inclined upward or downward 20° … 30°!

Notice!

Mount the BCL 504i with oscillating/deflection mirror in such a way that the outlet window of the barcode reader is parallel to the object. This will result in an angle of inclination of approx. 25°.

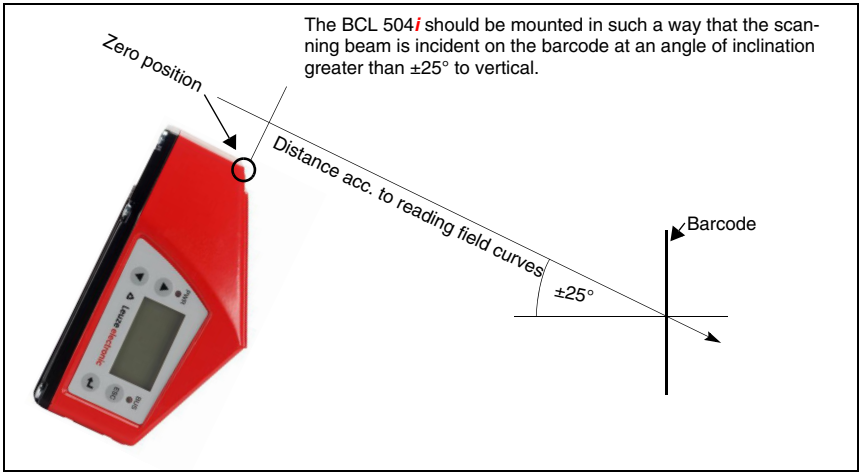

Figure 6.6: Total reflection – BCL 504i with oscillating/deflection mirror

6.3.4 Mounting location

When selecting a mounting location, pay attention to:

- *Maintaining the required environmental conditions (temperature, humidity).*
- *Possible soiling of the reading window due to liquids, abrasion by boxes, or packaging material residues.*
- *Lowest possible chance of damage to the BCL 504i by mechanical collision or jammed parts.*
- *Possible extraneous light (no direct sunlight or sunlight reflected by the barcode).*

6.3.5 Devices with integrated heating

For devices with integrated heating, also observe the following points:

- Mount the BCL 504i in a way which provides maximum thermal isolation, e.g. using rubber-bonded metal.
- Mount in such a way that the device is protected from draughts and wind; mount additional shields if necessary.

Notice!

When installing the BCL 504i in a protective housing, it must be ensured that the scanning beam can exit the protective housing without obstruction.

6.3.6 Maximum permissible read angles between BCL 504*i* and barcode

The optimum alignment of the BCL 504*i* is accomplished when the scan line scans the code bars almost at a right angle (90°). All read angles that are possible between the scan line and barcode must be taken account (figure 6.7).

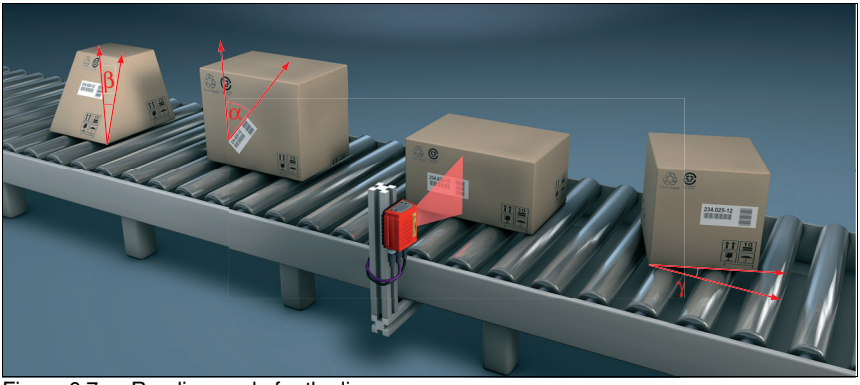

Figure 6.7: Reading angle for the line scanner

α Tilt - max. 45°

β Pitch - max. 45°

γ Skew - max. 45°

In order to avoid total reflection, the skew γ should be greater than 10°

6.4 Attaching laser warning sign

Attention Laser!

Follow the safety notices in chapter 2.

↳ *It is important that you attach the sticky labels supplied to the device (laser warning signs and laser emission symbol)! If the signs would be covered due to the installation situation of the BCL 504i, attach them instead in the immediate vicinity of the BCL 504i in such a way that it is not necessary to look into the laser beam when reading the notices!*

6.5 Cleaning

↳ *Clean the glass window of the BCL 504i with a soft cloth after mounting. Remove all packaging remains, e.g. carton fibres or Styrofoam balls. In doing so, avoid leaving fingerprints on the front cover of the BCL 504i.*

Attention!

Do not use aggressive cleaning agents such as thinner or acetone for cleaning the device.

7 Electrical connection

The BCL 504*i* barcode readers are connected using variously coded M12 connectors. This ensures unique connection assignments.

The additional USB interface is used for configuring the device.

For the locations of the individual device connections, please refer to the device detail shown below.

Notice!

The corresponding mating connectors and ready-made cables are available as accessories for all connections. For additional information, refer to chapter "Accessory USB cable" on page 187.

Figure 7.1: Location of the electrical connections

7.1 Safety notices for the electrical connection

Attention!

Do not open the device yourself under any circumstances! There is otherwise a risk of uncontrolled emission of laser radiation from the device. The housing of the BCL 504i contains no parts that need to be adjusted or maintained by the user.

Before connecting the device, be sure that the supply voltage agrees with the value printed on the name plate.

Connection of the device and cleaning must only be carried out by a qualified electrician.

Ensure that the functional earth (FE) is connected correctly. Unimpaired operation is only guaranteed when the functional earth is connected properly.

If faults cannot be corrected, the device should be removed from operation and protected against possible use.

Attention!

For UL applications, use is permitted exclusively in Class 2 circuits according to NEC (National Electric Code).

The BCL 504i barcode readers are designed in accordance with safety class III for supply by PELV (protective extra-low voltage with reliable disconnection).

Notice!

Protection class IP65 is achieved only if the connectors and caps are screwed into place!

7.2 Electrical connection of the BCL 504*i*

As a **PROFIBUS participant**, the BCL 504*i* is equipped with four M12 connectors / sockets which are A- and B-coded.

The voltage supply (**PWR**) as well as the four freely configurable switching inputs/outputs (**SW IN/OUT** and **PWR**) are connected there.

The BCL 504*i* is designed for use on the PROFIBUS DP. Available as **HOST / BUS IN** interface is a **DP IN - incoming PROFIBUS DP** for connection to the PLC. Available as a second physical **BUS OUT** interface is a **DP OUT - outgoing PROFIBUS DP** for setting up the PROFIBUS DP network.

A USB connection serves as a **SERVICE** interface.

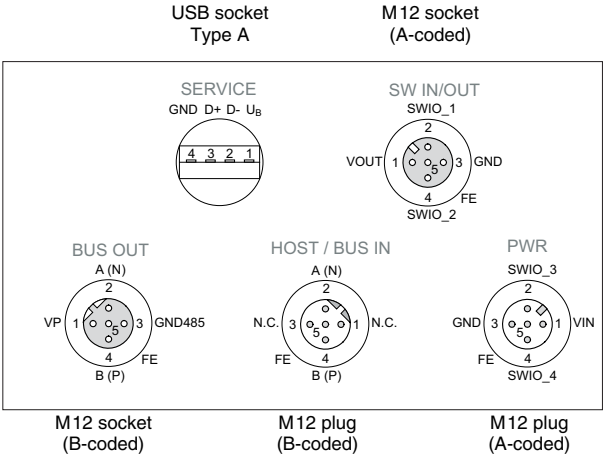

Figure 7.2: Connections of the BCL 504*i*

Described in detail in the following are the individual connections and pin assignments.

7.2.1 PWR – Voltage supply and switching input/outputs 3 and 4

PWR (5-pin plug, A-coded)			
PWR SWIO_3 2 GND 3 5 1 VIN FE 4 SWIO_4 **M12 plug (A-coded)**	**Pin**	**Name**	**Remark**
	1	VIN	Positive supply voltage +10 … +30 VDC
	2	SWIO_3	Configurable switching input / output 3
	3	GND	Negative supply voltage 0 VDC
	4	SWIO_4	Configurable switching input / output 4
	5	FE	Functional earth
	Thread	FE	Functional earth (housing)

Table 7.1: Pin assignment PWR

Supply voltage

Attention!

For UL applications, use is permitted exclusively in Class 2 circuits according to NEC (National Electric Code).

The BCL 504i barcode readers are designed in accordance with safety class III for supply by PELV (protective extra-low voltage with reliable disconnection).

Connecting functional earth FE

↳ *Ensure that the functional earth (FE) is connected correctly. Unimpaired operation is only guaranteed when the functional earth is connected properly. All electrical disturbances (EMC couplings) are discharged via the functional earth connection.*

Switching input / output

The BCL 504*i* is equipped with four freely programmable, opto-decoupled switching inputs and outputs **SWIO_1 … SWIO_4**.

The switching inputs can be used to activate various internal functions of the BCL 504*i* (decoding, autoConfig, …). The switching outputs can be used to signal the state of the BCL 504*i* and to implement external functions independent of the primary control.

The two switching inputs/outputs **SWIO_1** and **SWIO_2** are located on the **SW IN/OUT** M12 socket and are described in chapter 7.2.3. The other two (**SWIO_3** and **SWIO_4**) of the four freely configurable switching inputs/outputs are located on the **PWR** M12 connector.

Notice!

*In general, configuration of the barcode reader takes place on the PROFIBUS via the corresponding GSD file. Alternatively, you can temporarily set the respective function as input or output via the display or with the aid of the **webConfig** configuration tool for the purpose of testing the respective functionality. After reconnecting to the PROFIBUS or after deactivating parameter enabling, the parameter settings set by the PROFIBUS are again active!*

Described in the following is the external wiring for use as a switching input or output; the respective function assignments to the switching inputs/outputs can be found in chapter 10.

Function as switching input

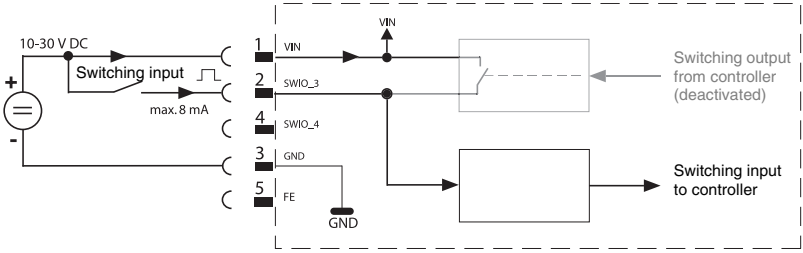

Figure 7.1: Switching input connection diagram SWIO_3 and SWIO_4

↳ *If you use a sensor with a standard M12 connector, please note the following:*

- Pins 2 and 4 must not be operated as switching outputs if sensors which function as inputs are also connected to these pins.

If, for example, the inverted sensor output is connected to pin 2, and pin 2 of the barcode reader is, at the same time, configured as an output (and not as an input), the switching output malfunctions.

Attention!

The maximum input current must not exceed 8 mA!

Function as switching output

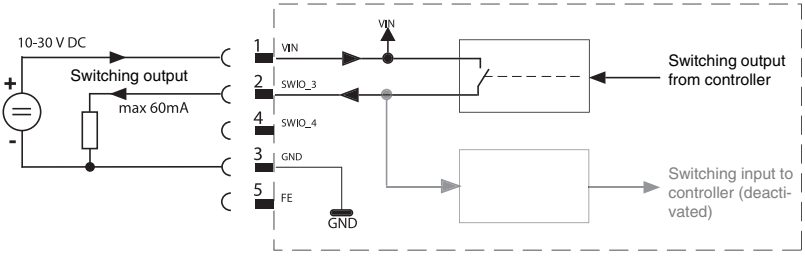

Figure 7.2: Switching output connection diagram SWIO_3 / SWIO_4

Attention!

Each configured switching output is short-circuit proof! Do not load the respective switching output of the BCL 504i with more than 60 mA at +10 … +30 VDC in normal operation!

Notice!

Both switching inputs/outputs SWIO_3 and SWIO_4 are configured by default in such a way that:

- Switching input SWIO_3 activates the reading gate
- Switching output SWIO_4 switches on "No Read"

7.2.2 SERVICE – USB interface (type A)

SERVICE – USB interface (type A)			
SERVICE GND D+ D- U_B 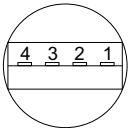 	**Pin**	**Name**	**Remark**
	1	VB	Positive supply voltage +5 V DC
	2	D-	Data -
	3	D+	Data +
	4	GND	Ground

Table 7.2: Pin assignments of SERVICE – USB interface

Attention!

Maximum load of the +5 V DC supply voltage of the USB interface is 200 mA!

↳ *Ensure adequate shielding.*

The entire connection cable must absolutely be shielded acc. to the USB specifications. Line length must not exceed 3 m.

↳ *Use the Leuze-specific **USB service cable** (see chapter 12 "Type overview and accessories") for the connection and use a service PC to configure.*

Note!

IP 65 is achieved only if the connectors and caps are screwed into place.

7.2.3 SW IN/OUT – Switching input/switching output

SW IN/OUT (5-pin socket, A-coded)			
SW IN/OUT SWIO_1 2 VOUT 1 5 3 GND 4 FE SWIO_2 **M12 socket (A-coded)**	**Pin**	**Name**	**Remark**
	1	VOUT	Voltage supply for sensors (VOUT identical to VIN at PWR IN)
	2	SWIO_1	Configurable switching input / output 1
	3	GND	GND for the sensors
	4	SWIO_2	Configurable switching input / output 2
	5	FE	Functional earth
	Thread	FE	Functional earth (housing)

Table 7.3: Pin assignment SW IN/OUT

The BCL 504*i* is equipped with four freely programmable, opto-decoupled switching inputs and outputs **SWIO_1 … SWIO_4**.

The two switching inputs/outputs **SWIO_1** and **SWIO_2** are located on the **SW IN/OUT** M12 socket. The other two (**SWIO_3** and **SWIO_4**) of the four freely configurable switching inputs/outputs are located on the **PWR** M12 connector and are described in chapter 7.2.1.

Described in the following is the external wiring for use as a switching input or output; the respective function assignments to the switching inputs/outputs can be found in chapter 10.

Function as switching input

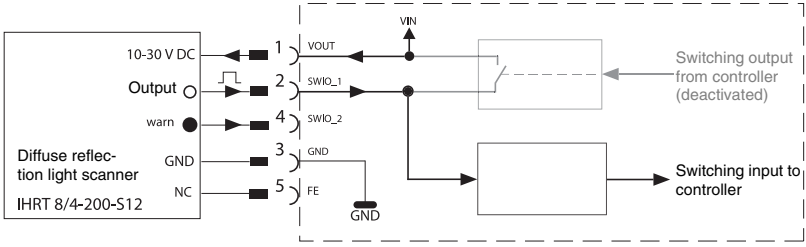

Figure 7.3: Switching input connection diagram SWIO_1 and SWIO_2

↳ *If you use a sensor with a standard M12 connector, please note the following:*

- Pins 2 and 4 must not be operated as switching outputs if sensors which function as inputs are also connected to these pins.

If, for example, the inverted sensor output is connected to pin 2, and pin 2 of the barcode reader is, at the same time, configured as an output (and not as an input), the switching output malfunctions.

Attention!

The maximum input current must not exceed 8mA!

Function as switching output

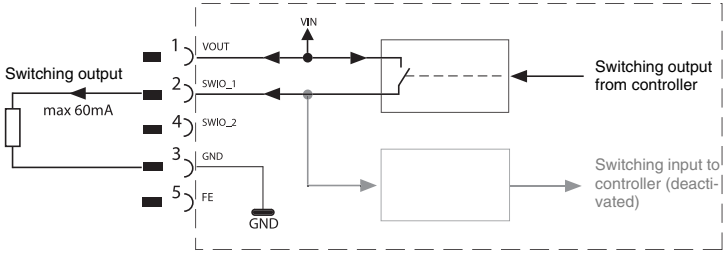

Figure 7.4: Switching output connection diagram SWIO_1 / SWIO_2

Attention!

Each configured switching output is short-circuit proof! Do not load the respective switching output of the BCL 504i with more than 60mA at +10 … +30VDC in normal operation!

Notice!

*Both switching inputs/outputs SWIO_1 and SWIO_2 are configured by default in such a way that they function as **switching inputs**:*

- Switching input **SWIO_1** activates the **start reading gate** function
- Switching input **SWIO_2** activates the **reference code teach-in** function

The functions of the individual switching inputs/outputs are programmed via the display or via configuration in the **webConfig** tool under the Switching input or Switching output heading.

For further information, see also "Commissioning and configuration" on page 100.

7.2.4 HOST / BUS IN for BCL 504*i*

The BCL 504*i* makes an interface of type **DP IN - incoming PROFIBUS** available as **HOST / BUS IN** connection.

HOST / BUS IN – DP IN (5-pin plug, B-coded)			
HOST / BUS IN 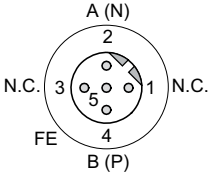 **M12 plug (B-coded)**	**Pin**	**Name**	**Remark**
	1	N.C.	Not used
	2	A (N)	Receive/transmit data A-line (N)
	3	N.C.	Not used
	4	B (P)	Receive/transmit data B-line (P)
	5	FE	Functional earth
	Thread	FE	Functional earth (housing)

Table 7.4: Pin assignment HOST / BUS IN BCL 504*i*

7.2.5 BUS OUT for the BCL 504*i*

To set up the PROFIBUS with additional participants, the BCL 504*i* makes available another interface of type **DP OUT - outgoing PROFIBUS DP**.

BUS OUT RS 485 (5-pin socket, B-coded)			
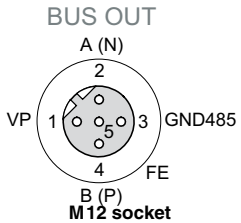 **M12 socket (B-coded)**	**Pin**	**Name**	**Remark**
	1	VP	+5 V DC for bus termination (termination)
	2	A (N)	Receive/transmit data A-line (N)
	3	GND 485	RS 485 ground reference for bus termination
	4	B (P)	Receive/transmit data B-line (P)
	5	FE	Functional earth / shield
	Thread	FE	Functional earth (housing)

Table 7.5: Pin assignment BUS OUT

Notice!

Ensure adequate shielding. The entire connection cable must be shielded and earthed. For connecting DP IN and DP OUT, we recommend the ready-made PROFIBUS cables. See "Accessory ready-made cables for bus connection" on page 189.

7.2.6 PROFIBUS termination

The last physical PROFIBUS participant must be terminated with a terminating resistor (see "Accessory terminating resistor" on page 187) on the BUS OUT socket.

7.3 Line lengths and shielding

Observe the following maximum line lengths and shielding types:

Connection	Interface	Max. line length	Shielding
BCL – service	USB	3 m	Shielding absolutely necessary acc. to USB specifications
PROFIBUS	PROFIBUS DP	Acc. to PNO specifications	Acc. to PNO specifications
BCL – power supply unit		30 m	not necessary
Switching input		10 m	not necessary
Switching output		10 m	not necessary

Table 7.6: Line lengths and shielding

8 Display and control panel

8.1 Structure of the control panel

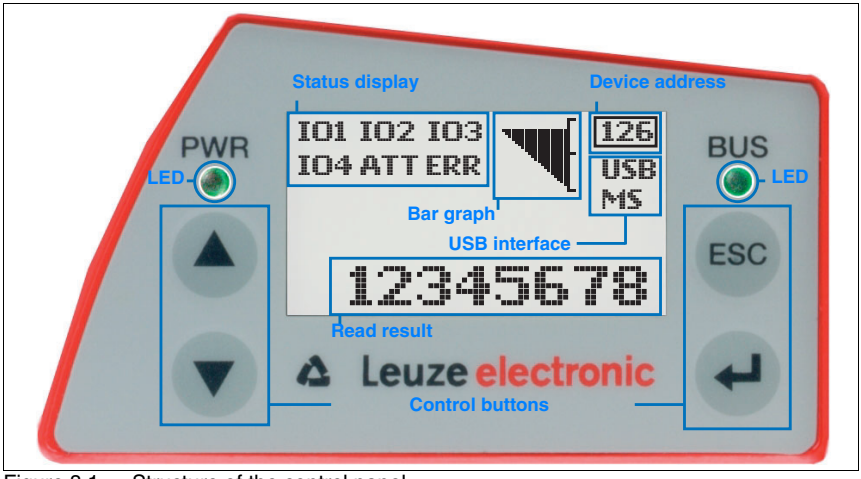

Figure 8.1: Structure of the control panel

8.2 Status display and operation

8.2.1 Indicators in the display

Status displays of the switching inputs/outputs

IO1 Switching input or switching output 1 active (function dependent on set configuration).
Default: Switching input with the "Reading gate activation" function

IO2 Switching input or switching output 2 active (function dependent on set configuration).
Default: Input with the "Teach-in" function

IO3 Switching input or switching output 3 active (function dependent on set configuration).
Default: Switching input with the "Reading gate activation" function

IO4 Switching input or switching output 4 active (function dependent on set configuration).
Default: Switching output with the "No read" function

ATT Warning (Attention)

ERR Internal device error (Error) -> The device must be sent in for inspection

Status display of the USB interface

USB The BCL 504*i* is connected to a PC via the USB interface.

MS An external parameter memory is properly connected to the USB interface of the BCL 504*i*.

Read result

The read barcode information is displayed.

Device address

Indicates the set PROFIBUS network address (default = 126).

8.2.2 LED status indicators

PWR LED

PWR	**off**	**Device OFF** - no supply voltage
PWR	**flashes green**	**Device ok, initialisation phase** - no barcode reading possible - voltage connected - self test running - initialisation running
PWR	**green continuous light**	**Device ok** - barcode reading possible - self test successfully finished - device monitoring active
PWR	**orange continuous light**	**Service mode** - barcode reading possible - configuration via the USB service interface - configuration via the display - no data on the host interface
PWR	**flashes red**	**Device ok, warning set** - barcode reading possible - temporary operating fault
PWR	**red continuous light**	**Device error / parameter enable** - no barcode reading possible

BUS LED

BUS	**off**	**No supply voltage** - no communication possible
BUS	**flashes green**	**Initialisation** - of the BCL 504*i*, establishing communication
BUS	**green continuous light**	**Operation ok** - bus ok, BCL 504*i* active on bus ("data exchange")
BUS	**flashes red**	**Communication error** Bus error - configuration failed ("parameter failure") - DP error - no data exchange
BUS	**red continuous light**	**Network error** Bus error - no DP protocol established to the master ("no data exchange")

8.2.3 Control buttons

▲	**Up**	**Navigate upward/laterally.**
▼	**Down**	**Navigate downward/laterally.**
ESC	**ESC**	**Exit menu item.**
↵	**ENTER**	**Confirm/enter value, change menu levels.**

Navigating within the menus

The menus within a level are selected with the up/down buttons ▲ ▼.
The selected menu item is activated with the enter button ↵.
Press the ESC button ESC to move up one menu level.
When one of the buttons is actuated, the display illumination is activated for 10 min.

Setting values

If input of a value is possible, the display looks like this:

```
0000|
   <-0123456789  save
Standard ----- Unit
  0000  |    |
```

Use the ▲▼ and ↵ buttons to set the desired value. An accidental, incorrect entry can be corrected by selecting <-| and then pressing ↵.
Then use the ▲▼ buttons to select save and save the set value by pressing ↵.

Selecting options

If options can be selected, the display looks like this:

```
o OFF
  ON
Standard ----- Unit
   OFF  |    |
```

Select the desired option with the ▲▼ buttons. Activate the option by pressing ↵.

8.3 Menu description

After voltage is applied to the barcode reader, a startup screen is displayed for several seconds. The display then shows the barcode reading window with all status information.

8.3.1 The main menus

Device information - main menu

This menu item contains detailed information on
- Device type
- Software version
- Hardware version
- Serial number

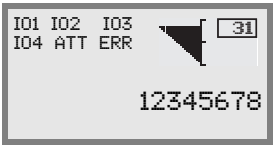

Barcode reading window - main menu
- Visualisation of the read barcode information
- Status overview of the switching inputs/outputs
- Set device address
- Bar graphs for read quality of the current barcode.

See "Indicators in the display" on page 78.

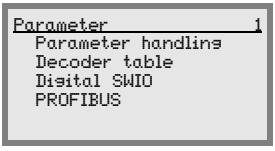

Parameter - main menu
- Configuration of the barcode reader.

See "Parameter menu" on page 83.

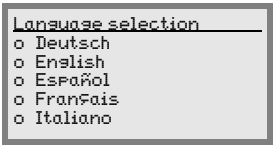

Language selection - main menu
- Selection of the display language.

See "Language selection menu" on page 90.

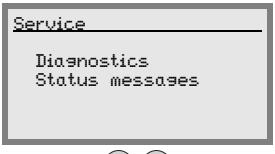

Service - main menu
- Scanner diagnosis and status messages

See "Service menu" on page 90.

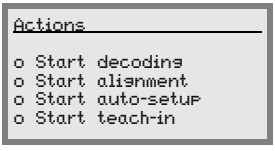

Actions main menu
- Various functions for scanner configuration and manual operation

See "Actions menu" on page 91.

Notice!

The rear cover *of this manual includes a* ***fold-out page*** *with the complete* ***menu structure****. It describes the menu items in brief.*
A detailed description of the individual parameters can be found in the description of the PROFIBUS GSD modules (see chapter 10.5 "Overview of the project modules").

Attention!

If parameters are changed via the display during bus operation, the BCL 504i is separated from the PROFIBUS at the moment parameter enabling is activated via the display. Parameters set by the PROFIBUS are moved to the background, and changes to parameters can be made via the display. When parameter enabling is exited, the BCL 504i is automatically reconnected to the PROFIBUS. Upon connection to the PROFIBUS, the BCL 504i receives all parameters from the PROFIBUS master.

Changes made via the display are overwritten!
Device settings for operating the BCL 504i on the PROFIBUS are managed and configured exclusively by the PROFIBUS master.

8.3.2 Parameter menu

Parameter handling

The `Parameter handling` submenu is used to lock and release the parameter input via the display and for resetting to default values.

Table 8.1: Parameter handling submenu

Level 3	Level 4	Level 5	Selection/configuration option Description	Standard
Parameter enabling			OFF/ON *The standard setting (OFF) prevents unintended parameter changes.* *If parameter enabling is activated (ON), parameters can be changed manually.* *As long as parameter enabling is activated, the BCL 504i is disconnected from the PROFIBUS.*	OFF
Parameters to default			*By pressing the enter button ↵ after selecting Parameters to default, all parameters are reset to their standard settings without any further security prompts.* *In this case, English is selected as the display language.*	

Decoder table

In the `Decoder table` submenu, 4 different code type definitions can be stored. Barcodes that have been read can only be decoded if they correspond to one of the definitions stored here.

Table 8.2: Decoder table submenu

Level 3	Level 4	Level 5	Selection/configuration option *Description*	Standard
Max. no. of labels			Value between 0 and 64 *The value set here specifies the maximum number of labels that should be detected for each reading gate.*	1
Decoder 1	Symbology (Code type)		No code Code 2 of 5 interleaved Code 39 Code 32 Code UPC Code EAN Code 128 EAN Addendum Codabar Code 93 RSS 14 RSS Limited RSS Expanded *If No code is configured, the current and all subsequent decoders are deactivated.*	Code 2/5i
	Number of digits	Interval mode	OFF/ON *With the ON setting, the values in digits 1 and 2 define a range of character numbers that are to be read.*	OFF
		Digits 1	0 to 64 characters *First decodable number of characters or lower range limit.*	10
		Digits 2	0 to 64 characters *Second decodable number of characters or upper range limit.*	0
		Digits 3	0 to 64 characters *Third decodable number of characters.*	0
		Digits 4	0 to 64 characters *Fourth decodable number of characters.*	0
		Digits 5	0 to 64 characters *Fifth decodable number of characters.*	0
	Reading reliability		Value from 2 to 100 *Number or scans required to reliably detect a label.*	4

Table 8.2: Decoder table submenu

Level 3	Level 4	Level 5	Selection/configuration option *Description*	Standard
	Check digit method		Standard No check Depending on the symbology (code type) selected for the decoder, further calculation algorithms can be selected here. *Check digit method used for the decoding of the barcode that has been read.* *If Standard is set, the check digit method intended for the respective code type is used.*	Standard
	Check digit transm.		Standard Not standard *Specifies whether the check digit is transmitted. Standard means that the transmission matches the standard intended for the respective code type.*	Standard
Decoder 2	Symbology		*as decoder 1*	Code 39
	Number of digits	Interval mode	OFF/ON	ON
		Digits 1	0 to 64 characters	4
		Digits 2	0 to 64 characters	30
		Digits 3	0 to 64 characters	0
		Digits 4	0 to 64 characters	0
		Digits 5	0 to 64 characters	0
	Reading reliability		Value from 2 to 100	4
	Check digit method		*as decoder 1*	Standard
	Check digit transm.		*as decoder 1*	Standard
Decoder 3	Symbology		*as decoder 1*	Code 128
	Number of digits	Interval mode	OFF/ON	ON
		Digits 1	0 to 64 characters	4
		Digits 2	0 to 64 characters	63
		Digits 3	0 to 64 characters	0
		Digits 4	0 to 64 characters	0
		Digits 5	0 to 64 characters	0
	Reading reliability		Value from 2 to 100	4
	Check digit method		*as decoder 1*	Standard
	Check digit transm.		*as decoder 1*	Standard

Table 8.2: Decoder table submenu

Level 3	Level 4	Level 5	Selection/configuration option *Description*	Standard
Decoder 4	Symbology		*as decoder 1*	Code UPC
	Number of digits	Interval mode	OFF/ON	OFF
		Digits 1	0 to 64 characters	8
		Digits 2	0 to 64 characters	0
		Digits 3	0 to 64 characters	0
		Digits 4	0 to 64 characters	0
		Digits 5	0 to 64 characters	0
	Reading reliability		Value from 2 to 100	4
	Check digit method		*as decoder 1*	Standard
	Check digit transm.		*as decoder 1*	Standard

Digital SWIO

The Digital SWIO submenu is used to configure the 4 switching inputs/outputs of the BCL 504*i*.

Table 8.3: Digital SWIO submenu

Level 3	Level 4	Level 5	Selection/configuration option *Description*	Standard
Sw. input/ output 1	I/O mode		Input / Output / Passive *Determines the function of switching input/output 1.* *In the case of passive, the connection is on 0 V if the Inverted parameter is set to OFF, and on +UB if the Inverted parameter is set to ON.*	Input
	Switching input	Inverted	OFF / ON *OFF = activation of the switching input function upon high level at the switching input* *ON = activation of the switching input function upon low level at the switching input*	OFF
		Debounce time	Value from 0 to 1000 *Time in milliseconds for which the input signal must be present and stable.*	5
		Start-up delay	Value from 0 to 65535 *Time in milliseconds between the end of the debounce time and activation of the function configured below.*	0
		Pulse duration	Value from 0 to 65535 *Minimum activation time in milliseconds for the function configured below.*	0
		Switch-off delay	Value from 0 to 65535 *Time in milliseconds for which the function configured below remains activated after the switching input signal is deactivated and the pulse duration has expired.*	0
		Function	No BCL500i function Rd. gate start/stop Rd. gate stop Rd. gate start Teach reference code Autoconfig start/stop *The function set here is carried out after the switching input is activated.*	Reading gate start/stop

Table 8.3: Digital SWIO submenu

Level 3	Level 4	Level 5	Selection/configuration option *Description*	Standard
	Switching output	Inverted	OFF / ON *OFF = activated switching output upon high level* *ON = activated switching output upon low level*	OFF
		Signal delay	Value from 0 to 65535 *Time in milliseconds between activation function and switching of the switching output.*	0
		Pulse duration	Value from 0 to 65535 *Switch-on time of the switching output in milliseconds. If the Pulse duration is set to 0, the switching output is switched on via the Activation function and switched off via the Deactivation function.* *If the Pulse duration is greater than 0, the Deactivation function has no effect.*	400
		Activation function 1	No function Reading gate start Reading gate end Positive reference code comparison 1 Negative reference code comparison 1 Valid read result Invalid read result Device ready Device not ready Data transmission active Data transmission not active AutoCont. good quality AutoCont. bad quality Reflector detected Reflector not detected External event, pos. edge External event, neg. edge Device active Device standby No device error Device error Positive reference code comparison 2 Negative reference code comparison 2 *The function set here specifies which event activates the switching output.*	No function
		Deactivation function 1	See Activation function 1 for selection options *The function set here specifies the event that deactivates the switching output.*	No function

Table 8.3: Digital SWIO submenu

Level 3	Level 4	Level 5	Selection/configuration option *Description*	Standard
Sw. input/ output 2	I/O mode		Input / Output / Passive	Output
	Switching input	Inverted	OFF / ON	OFF
		Debounce time	Value from 0 to 1000	5
		Start-up delay	Value from 0 to 65535	0
		Pulse duration	Value from 0 to 65535	0
		Switch-off delay	Value from 0 to 65535	0
		Function	see switching input/output 1	No function
	Switching output	Inverted	OFF / ON	OFF
		Signal delay	Value from 0 to 65535	0
		Pulse duration	Value from 0 to 65535	400
		Activation function 2	see switching input/output 1	Valid read result
		Deactivation function 2	see switching input/output 1	Reading gate start
Sw. input/ output 3	I/O mode		Input / Output / Passive	Input
	Switching input	Inverted	OFF / ON	OFF
		Debounce time	Value from 0 to 1000	5
		Start-up delay	Value from 0 to 65535	0
		Pulse duration	Value from 0 to 65535	0
		Switch-off delay	Value from 0 to 65535	0
		Function	see switching input/output 1	Reading gate start/stop
	Switching output	Inverted	OFF / ON	OFF
		Signal delay	Value from 0 to 65535	0
		Pulse duration	Value from 0 to 65535	400
		Activation function 3	see switching input/output 1	No function
		Deactivation function 3	see switching input/output 1	No function
Sw. input/ output 4	I/O mode		Input / Output / Passive	Output
	Switching input	Inverted	OFF / ON	OFF
		Debounce time	Value from 0 to 1000	5
		Start-up delay	Value from 0 to 65535	0
		Pulse duration	Value from 0 to 65535	0
		Switch-off delay	Value from 0 to 65535	0
		Function	see switching input/output 1	No function
	Switching output	Inverted	OFF / ON	OFF
		Signal delay	Value from 0 to 65535	0
		Pulse duration	Value from 0 to 65535	400
		Activation function 4	see switching input/output 1	Invalid read result
		Deactivation function 4	see switching input/output 1	Reading gate start

PROFIBUS

The PROFIBUS submenu is used to configure the PROFIBUS address

Table 8.4: PROFIBUS submenu

Level 3	Level 4	Level 5	Selection/configuration option Description	Standard
PROFIBUS address			Value from 0 to 126 *The PROFIBUS permits an address range from 0 to 126. Address 126 must not be used for data communication. It may only be used temporarily for commissioning.* *The default address is 126.* *The address must be assigned separately for each barcode reader of type BCL 504i*	126

8.3.3 Language selection menu

Currently, there are 5 display languages available:

- German
- English
- Spanish
- French
- Italian

The display language and the language of the webConfig user interface are synchronised. The setting in the display affects the webConfig tool and vice versa.

Notice!

When operating the BCL 504i on the PROFIBUS, the language configured in the GSD file is used in the display.

8.3.4 Service menu

Diagnostics

This menu item is used exclusively for service purposes by Leuze electronic.

Status messages

This menu item is used exclusively for service purposes by Leuze electronic.

8.3.5 Actions menu

Start decoding

Here, you can perform a single reading via the display.

↳ *Use the ↵ button to activate the single read operation and place a barcode in the reading field of the BCL 504i.*

The laser beam is switched on and the following display appears:

```
Actions
o Stop decoding
      zzzzzzzzz
```

Once the barcode is detected, the laser beam is switched off again. The read result zzzzzzzzz is shown directly in the display for about 1 s. After that, the Actions menu is displayed again.

Start alignment

The alignment function makes it easy to align the BCL 504*i* by optically displaying the read quality.

↳ *Use the ↵ button to activate the Justage (alignment) function and place a barcode in the reading field of the BCL 504i.*

At first, the laser beam is switched on continuously, enabling you to position the barcode securely in the reading field. Once the barcode is read, the laser beam is switched off briefly and the following display appears:

```
Actions
o Stop alignment
   xx   zzzzzzzzz
```

xx Read quality in % (scans with info)

zzzzzz: Contents of the decoded barcode.

Once the barcode has been detected, the laser beam starts to flash.

The flash frequency provides visual information on the read quality. The faster the laser beam flashes, the higher the read quality.

Start auto-setup

The auto-setup function provides an easy option for configuring the code type and number of digits of Decoder 1.

↳ *Use the ↵ button to activate the auto-setup function and place an unknown barcode in the reading beam of the BCL 504i.*

The following display appears:

```
Actions
o Stop auto-setup
xx yy zzzzzz
```

The following information is displayed:

xx	Code type of the detected code (sets the code type of Decoder 1)
'01'	2/5 Interleaved
'02'	Code 39
'06'	UPC (A, E)
'07'	EAN
'08'	Code 128, EAN 128
'10'	EAN/UPC
'11'	Codabar
yy	Number of digits of the detected code (sets the number of digits of Decoder 1)
zzzzzz:	Contents of the decoded label. A ↑ appears if the label was not correctly read.

Start teach-in

The teach-in function can be used to conveniently read reference code 1.

↳ *Use the ↵ button to activate the teach-in function and place a barcode which contains the content that you wish to store as the reference code in the reading beam of the BCL 504i.*

The following display appears:

```
Actions
o Stop teach-in
  RC13xxzzzzzz
```

The following information is displayed:

RC13	means that reference code number 1 is stored in RAM. This is always output.
xx	defined code type (see auto-setup)
z	defined code information (1 … 63 characters)

8.4 Operation

Shown here is an example describing important operating procedures in detail.

Parameter enabling

During normal operation parameters can only be viewed. If parameters need to be changed, the **ON** menu item in the **Parameter enabling** menu must be activated. To do this proceed as follows:

```
Parameter                1
  Parameter handling
  Decoder table
  Digital SWIO
  PROFIBUS
```

In the parameter menu, use the ▲▼ buttons to select the Parameter handling menu item.

Press the enter button to enter the Parameter handling menu.

```
Parameter handling  1.1

o Parameter enabling
☐ Parameters to default
```

In the Parameter handling menu, use the ▲▼ buttons to select the Parameter enabling menu item.

Press the enter button to enter the Parameter enabling menu.

```
Parameter enabling
  OFF
o ON

Standard ----- Unit
   OFF  |    |
```

In the Parameter enabling menu, use the ▲▼ buttons to select the ON menu item.

Press the enter button to switch on parameter enabling.

```
Parameter enabling

  OFF
O ON

Standard ----- Unit
   OFF  |    |
```

The PWR LED lights up red. You can now set individual parameters via the display.

ESC ESC

Press the ESC button twice to return to the main menu.

Attention!

The BCL 504i is deactivated on the PROFIBUS if parameter enabling is activated via the display. The device is reactivated on the PROFIBUS after parameter enabling is exited.

Notice!

In the PROFIBUS network, configuration is performed exclusively via the PROFIBUS.

Parameters set via the display when operating the BCL 504*i* on the PROFIBUS are overwritten by the parameters set in the GSD modules. For GSD modules which are not actively used on the PROFIBUS, the default settings of the barcode reader apply, see "Overview of the project modules" on page 112. Thus, the PROFIBUS presets values to all parameters.

Attention!

If parameters are changed via the display during bus operation, the BCL 504i is separated from the PROFIBUS at the moment parameter enabling is activated via the display. Parameters set by the PROFIBUS are moved to the background, and changes to parameters can be made via the display. When parameter enabling is exited, the BCL 504i is automatically reconnected to the PROFIBUS. Upon connection to the PROFIBUS, the BCL 504i receives all parameters from the PROFIBUS master.

Changes made via the display are overwritten!
Device settings for operating the BCL 504i on the PROFIBUS are managed and configured exclusively by the PROFIBUS master.

Attention!

When operating the BCL 504i on the PROFIBUS, the password entered in the display has no effect. The PROFIBUS overwrites the password with the default settings.

If a password is desired for PROFIBUS operation, it must be configured via module 62 (see "Module 62 – Display" on page 149).

Network configuration

Information on network configuration can be found in chapter "Commissioning and configuration" on page 100.

9 Leuze webConfig tool

With the **Leuze webConfig tool**, an operating-system independent, web-technology based, graphical user interface is available for configuring barcode readers of the **BCL 500*i*** series.

Through the use of HTTP as communication protocol and by using only standard technologies on the client side (HTML, JavaScript and AJAX), which are supported by all commonly used, modern browsers (e.g. **Mozilla Firefox** beginning with Version 1.5 or **Internet Explorer** beginning with Version 6.0), it is possible to operate the **Leuze webConfig tool** on any internet-ready PC.

9.1 Connecting the SERVICE USB interface

The connection to the SERVICE USB interface of the BCL 504*i* is established via the PC-side USB interface using a special USB cable with 2 type A/A connectors.

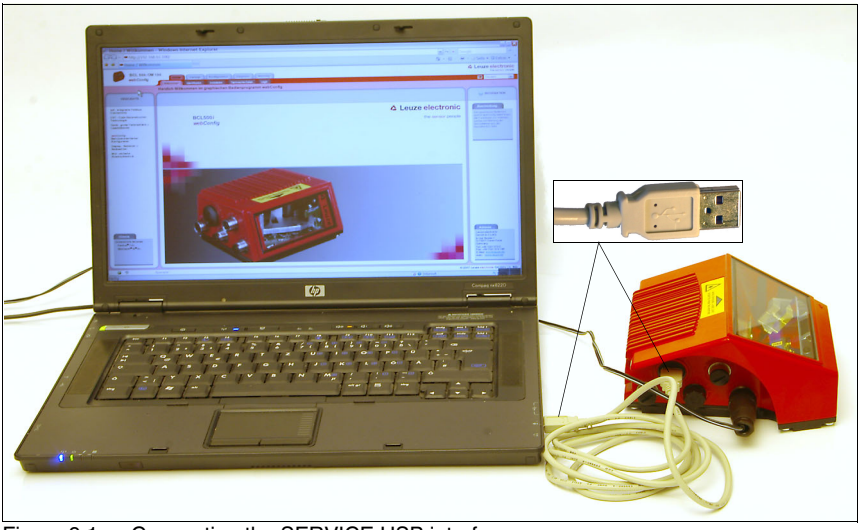

Figure 9.1: Connecting the SERVICE USB interface

9.2 Installing the required software

9.2.1 System requirements

Operating system:	Windows 2000 Windows XP (Home Edition, Professional) Windows Vista
Computer:	PC with USB interface version 1.1 or higher
Graphics card:	min. 1024 x 768 pixels or higher resolution
Required hard-disk capacity:	approx. 10MB

9.2.2 Installing the USB driver

In order for the BCL 504*i* to be automatically detected by the connected PC, the **USB driver** must be installed **once** on your PC. To do this, you must have **administrator privileges**.

Please proceed according to the following steps:

- *Start your PC with administrator privileges and log on.*
- *Load the CD included in the delivery contents of your BCL 504i in the CD drive and start the "setup.exe" program.*
- *Alternatively, you can also download the setup program from the internet at www.leuze.de.*
- *Follow the instructions provided by the setup program.*

Upon successful installation of the USB driver, a BCL 50xi icon automatically appears on the desktop.

To check: In the Windows Device Manager, a device called "Leuze electronic, USB Remote NDIS Network Device" appears under the "Network adapter" device class following successful USB registration.

9.3 Starting the webConfig tool

To start the **webConfig tool**, click the BCL 50xi icon located on the desktop. Make certain that the BCL 504*i* is connected to the PC via the USB interface and that voltage is connected.

Or alternatively: Open a browser on your PC and enter the following address: **192.168.61.100**

This is the default Leuze maintenance address for communication with barcode readers of the BCL 500*i* series.

In both cases, the following start page appears on your PC.

Figure 9.2: The start page of the webConfig tool

Notice!

The webConfig tool is completely contained in the firmware of the BCL 504i. Depending on firmware version, the start page may vary from that shown above.

The individual parameters are – where useful – graphically displayed in order to better illustrate the meaning of the what are often perceived as abstract parameters.

The result is an easy-to-use and practically-oriented user interface!

9.4 Short description of the webConfig tool

The webConfig tool has 5 main menus:

- Home
  with information on the connected BCL 504*i* as well as on installation. This information corresponds to the information in this handbook.
- Alignment
  for manually starting read processes and for aligning the barcode reader. The results of the read processes are displayed immediately. As a result, this menu item can be used to determine the optimum installation location.
- Configuration
  for adjusting decoding, for data formatting and output, switching inputs/outputs, communication parameters and interfaces, etc...
- Diagnostics
  for event logging of warnings and errors
- Maintenance
  for updating the firmware

The user interface of the webConfig tool is largely self-explanatory.

9.4.1 Module overview in the Configuration menu

The adjustable parameters of the BCL 504*i* are clustered in modules in the Configuration menu.

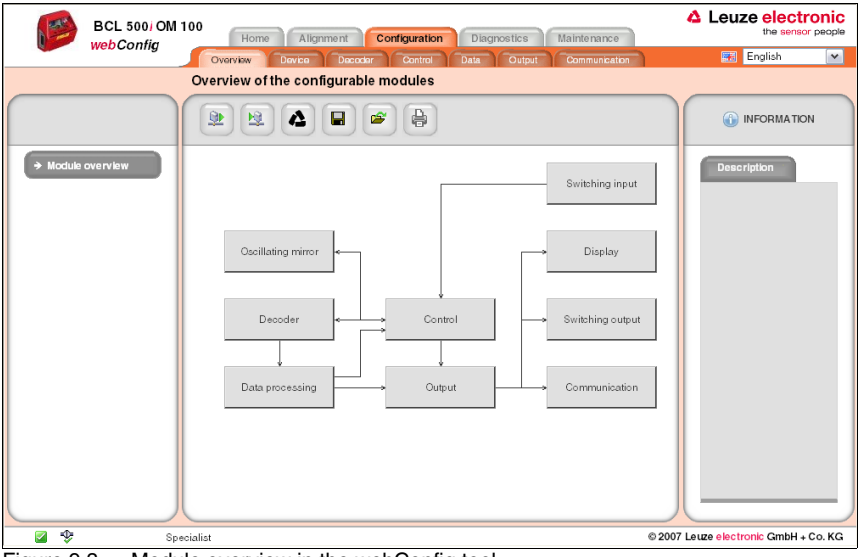

Figure 9.3: Module overview in the webConfig tool

Notice!

The webConfig tool is completely contained in the firmware of the BCL 504i. Depending on firmware version, the module overview may vary from that shown above.

The individual modules and their relationships to one another are graphically displayed in the module overview. The display is context sensitive, i.e. click a module to directly access the corresponding submenu.

An overview of the modules:

- Decoder
  Definition of code types, code-type features and number of digits of the labels that are to be decoded
- Data processing
  Filtering and processing of the decoded data
- Output
  Sorting of the processed data and comparison with reference codes
- Communication
  Formatting of the data for output via the communication interfaces
- Control
  Activation/deactivation of decoding
- Switching input
  Activation/deactivation of read processes
- Switching output
  Definition of events which activate/deactivate the switching output
- Display
  Formatting of the data for output on the display
- Oscillating mirror (optional)
  Adjustment of oscillating mirror parameters

The webConfig tool is available for all barcode readers of the BCL 500*i* series. Because configuration of the BCL 504*i* PROFIBUS device is performed via the PROFIBUS, the module overview shown in the webConfig tool is, in this case, used only for displaying and checking the configured parameters.

The current configuration of your BCL 504*i* is loaded upon startup of the webConfig tool. If you change the configuration via the PROFIBUS while the webConfig tool is running, you can use the "Load parameter from device" button after making the changes to update the display in the webConfig tool. This button appears in the upper left in the centre window area in all submenus of the Configuration main menu.

10 Commissioning and configuration

Attention Laser!

Observe the safety notices in chapter 2!

10.1 General information on the PROFIBUS implementation of the BCL 504*i*

10.1.1 Communication profile

The **communication profile** defines how participants serially transmit their data via the transmission medium. The **BCL 504*i*** supports the communication profile for automation systems and **D**ecentral **P**eriphery -> **PROFIBUS DP**.

DP communication profile

The **PROFIBUS DP** communication profile is designed for efficient data exchange on the field level. Data exchange with the decentral devices occurs primarily cyclically. The necessary communication functions are defined in the **DP** base functions. The **DP** optionally offers acyclic communication services as well. These are used for configuring, operating, observing and alarm handling.

In order to be able to perform data exchange, services are defined which **PROFIBUS DP** differentiates between on the basis of the data access points transmitted in the telegram header.

The BCL 504*i* profile is based on the PROFIBUS profile for identification systems.

10.1.2 Bus-access protocol

The PROFIBUS communication profiles (DP,FMS) use a uniform bus-access process. It is implemented by layer 2 of the OSI model. The bus-access control (MAC) defines the process for specifying the point in time at which a network device can transmit data. It must ensure that no more than one participant has permission to transmit at any given time. The PROFIBUS bus-access process includes the token-passing process and the master-slave process.

Process	Description	BCL 504*i*
Token-passing process	With this process, the bus-access permission is distributed by means of a token. The participant obtains permission to transmit with the token. The token wanders between the master devices in the ring in a permanently defined time frame. This type of bus access is used for communication between the masters.	No
Master-slave process	Various slave devices are assigned to a master. The master can address the slaves which are assigned to it and fetch messages from them. The master always has the initiative.	Yes

Table 10.1: PROFIBUS bus-access processes

The two processes can also be mixed in order to create a multi-master system. The BCL 504*i* functions both in a mono-master system as well as in a multi-master system.

Notice!

In 2007, the PROFIBUS DP was extended by the DPV2 specification. The specification will then also permit slave-slave communication. The BCL 504i does not support this type of communication.

10.1.3 Device types

With the PROFIBUS DP, there are two types of master and one type of slave:

Device type	Description	BCL 504*i*
Class 1 master (DPM1)	Class 1 masters are defined for the user-data communication. (e.g.PLC,PC)	
Class 2 Master (DPM2)	Class 2 masters are defined for commissioning purposes. Additional services facilitate easier configuration as well as device diagnosis.	
Slave	The slave is a peripheral device which makes available input data for the control and receives output data from the control.	X

Table 10.2: PROFIBUS DP master and slave types

Notice!

The device is defined as a slave in the device master file (GSD file) of the BCL 504i!

10.1.4 Expanded DP functions

The PROFIBUS standard has been expanded (DPV1) and, in addition to the cyclic services, also offers acyclic services. These services operate in parallel with the cyclic user-data communication. Masters and slaves can use additional READ and WRITE functions as well as ALARM functions. This is intended especially for operation with an engineering tool (DP-master class 2, DPM2) in order to change parameters and read out status information during normal operation.

The acyclic services operate with lower priority. The functions are different for the various master classes.

Function	Slave SAP	Description	BCL 504*i*
MSAC1_Read	SAP51	Read datablock at slave	Yes 1)
MSAC1_Write	SAP51	Write datablock at slave	Yes 2)
MSAC1_Alarm_Acknowledge	SAP50	Alarm acknowledgement from master to slave	No

Table 10.3: Services for DPVM1 class 1 and slaves

1) For I&M functionality
2) For I&M functionality

Function	Slave SAP	Description	BCL 504*i*
MSAC2_Read	51	Read datablock at slave	No
MSAC2_Write	51	Write datablock at slave	No
MSAC2_Initiate	49	Establish connection between DPM2 and slave	No
MSAC2_Abort	0 … 48	Establish connection between DPM2 and slave	No
MSAC1_Data_Transport	0 … 48	Write data to slave and read data from slave in a service cycle	No

Table 10.4: Services for DPVM1 class 2 and slaves

Notice!

*All expanded services are **not** implemented for the first BCL 504i PROFIBUS profile.*

10.1.5 Automatic baud rate detection

The PROFIBUS implementation of the BCL 504*i* features automatic baud rate detection. The BCL 504*i* uses this function and offers no possibility for manual or permanent adjustment. The following baud rates are supported:

Baud rate kBit/s	9,6	19,2	45,45	93,75	187,5	500	1500	3000	6000	12000

Automatic baud rate detection is indicated in the device master file of the BCL 504*i*: **Auto_Baud_supp = 1**

10.2 Measures to be performed prior to the initial commissioning

- *Before commissioning, familiarise yourself with the operation and configuration of the BCL 504i.*
- *Before connecting the supply voltage, recheck all connections and ensure that they have been properly made.*

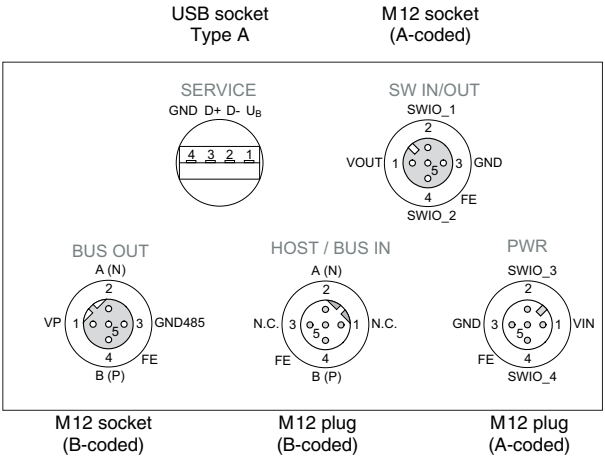

Figure 10.1: Connections of the BCL 504*i*

- *Check the applied voltage. It must be in the range between +10V … 30VDC.*

Connecting functional earth FE

- *Ensure that the functional earth (FE) is connected correctly.*

Unimpaired operation is only guaranteed when the functional earth is connected properly. All electrical disturbances (EMC couplings) are discharged via the functional earth connection.

10.3 Address setting

10.3.1 Setting the device address on the display

The display of the BCL 504*i* possesses an important function for setting the PROFIBUS address. The PROFIBUS address, i.e. the respective station number of the network device, is set there.

Notice!

The address setting can only be performed via the display if parameter enabling is active. Information on this topic can be found in chapter "Parameter enabling" on page 93.

The set address must be ≥ 0 and < 126. Each network device is thereby automatically informed that it is a slave on the PROFIBUS with its specific address and that it is initialised and queried by the PLC.

The PROFIBUS permits an address range from 0 to 126. Address 126 must not be used for data communication. It may only be used temporarily for commissioning. The default address is 126.

The address must be assigned individually for each barcode reader of type BCL 504*i*; this can be performed by making entries on the display or with the webConfig tool.

Notice!

The BCL 504i does not permit address assignment via the PROFIBUS!

To set the address via the display, proceed as follows:

In the main menu, use the ▲▼ buttons to select the Parameter menu and use the enter button ↵ to activate the Parameter menu. The following screen appears:

```
Parameter                1
  Parameter handling
  Decoder table
  Digital SWIO
  PROFIBUS
```

In the Parameter menu, use the ▲▼ buttons to select the PROFIBUS menu item.

Press the enter button to enter the PROFIBUS menu.

```
PROFIBUS

o PROFIBUS address
```

Press the enter button again to enter the menu for setting the PROFIBUS address.

```
PROFIBUS address
12|
 <-|0123456789     save
Standard ----- Unit
   126  |    |
```

Use the ▲▼ and ↵ buttons to set the desired PROFIBUS address. An accidental, incorrect entry can be corrected by selecting <-| and then pressing ↵.
Then use the ▲▼ buttons to select save and save the set PROFIBUS address by pressing ↵.

After saving the PROFIBUS address, the BCL 504*i* performs a restart and then returns to operation with the barcode reading menu.

In the upper right part of this display, you can check the address which you set.

Notice!

Permissible values for the PROFIBUS address are 0 … 125. Make certain that a different PROFIBUS address is assigned to each PROFIBUS participant.

All other parameters required for the reading task, such as setting the code type and number of digits, etc., are set using the engineering tool of the PLC with the aid of the various available modules (see chapter 10.4).

10.4 Commissioning via the PROFIBUS

10.4.1 General information

The BCL 504*i* is designed as a PROFIBUS slave device. The functionality of the device is defined via parameter sets which are clustered in modules. The modules are included in a GSD file, which is supplied as an integral part of the device. By using a user-specific configuration tool, such as, e.g., Simatic Manager for the programmable logic control by Siemens, the required modules are integrated into a project during commissioning and its settings and parameters are adjusted accordingly. These modules are provided by the GSD file.

Notice!

All input and output modules described in this documentation are described from the controller's perspective:

- ***Input data arrives at the controller.***
- ***Output data is sent out by the controller.***

10.4.2 Preparing the control system for consistent data transmission

During programming the control system must be prepared for the consistent data transmission. This varies from control system to control system. The following possibilities are available for the Siemens control systems.

S7

The specific function blocks **SFC 14** for input data and **SFC 15** for output data must be integrated in the program. These are standard function blocks and are used to facilitate consistent data transmission.

10.4.3 General information on the GSD file

You can find the GSD file at
www.leuze.de -> Download -> identify -> Stationary and hand-held barcode readers.

All data in modules required for operating the **BCL 504*i*** is described in this file. These are input and output data and device parameters for the functioning of the **BCL 504*i*** and the definition of the control and status bits.

If parameters are changed, e.g., in the project tool, these changes are stored on the PLC side in the project, not in the GSD file. The GSD file is a certified and integral part of the device and must not be changed manually. The file is not changed by the system either.

The functionality of the **BCL 504*i*** is defined via GSD parameter sets. The parameters and their functions are structured in the GSD file using module. A user-specific configuration tool is used during PLC program creation to integrate the required modules and configure them appropriately for their respective use. During operation of the **BCL 504*i*** on the PROFIBUS, all parameters are set to default values. If these parameters are not changed by the user, the device functions with the default settings delivered by Leuze electronic.

For the default settings of the **BCL 504*i***, please refer to the following module descriptions.

Notice!

Please note that the set data is overwritten by the PLC!
*Some controls make available a so-called "universal module". This module must not be activated for the **BCL 504*i***!*

From the perspective of the device, a distinction is made between PROFIBUS parameters and internal parameters. PROFIBUS parameters are all parameters that can be changed via the PROFIBUS and are described in the following modules. Internal parameters, on the other hand, can only be changed via a service interface and retain their value even following a PROFIBUS configuration.

During the configuration phase, the BCL receives a parameter telegram from the master. Before this is evaluated and the respective parameter values are set, all PROFIBUS parameters are reset to default values. This ensures that the parameters of modules that are not selected are set to the default values.

Notice!

This does not affect modules 1-4 for the code table extension. By default, all but the first code table entry are locked. If "no code" is selected here, all subsequent code tables are deactivated (see chapter 10.6.1 "Modules 1-4 – Code table extensions 1 to 4").

10.4.4 Permanently defined parameters / device parameters

On the PROFIBUS, parameters may be stored in modules or may be defined permanently in a PROFIBUS participant.

The permanently defined parameters are called "common" parameters or device-specific parameters, depending on the configuration tool.

These parameters must always be present. They are defined outside of the modules and are permanently anchored in the telegram header.

Hilscher Master Controller

In SyCon, the permanently defined parameters are set via **slave configuration -> parameter data -> common**. The module parameters are set via **slave configuration -> parameter data -> module**.

Simatic S7 Controller

In Simatic Manager, the permanently defined parameters are set via object properties of the device. The module parameters are set via the module list of the selected device. By selecting the project properties of a module, the respective parameters may be set if required.

The following list contains the parameters that are permanently defined in the BCL 504*i* but are configurable. These parameters always exist and are available independent of the modules.

Parameter	Description	Addr.	Data type	Value range	Default	Unit
Profile number	Number of the activated profile. For BCL 504*i*: constant with value 0	0	Byte	0 … 255	0	-
Code type 1	Released code type; no code means that all subsequent code tables are also deactivated. The valid number of digits also depends on the code type.	1.0 … 1.5	BitArea	0: 0: No code 1: 2/5 Interleaved 2: Code39 2: Code32 6: UPC, UPCE 7: EAN8, EAN13 8: Code128 10: EAN Addendum 11: Codabar 12: Code93 13: RSS-14 14: RSS Limited 15: RSS Expanded	0	-
Number-of-digits mode	Specifies how the subsequent numbers of digits are to be interpreted.	2.6	Bit	0: Enumeration 1: Range	0	-
Digits 1	Decodable number of digits; in the case of a range, this number defines the lower limit.[1)]	2.0 … 2.5	UNSIGNED8	0 … 63	1	-
Digits 2	Decodable number of digits; in the case of a range, this number defines the upper limit.	3	UNSIGNED8	0 … 63	0	-
Digits 3	Decodable number of digits in the **enumeration** mode.	4	UNSIGNED8	0 … 63	0	-
Digits 4	Decodable number of digits in the **enumeration** mode.	5	UNSIGNED8	0 … 63	0	-
Digits 5	Decodable number of digits in the **enumeration** mode.	6	UNSIGNED8	0 … 63	0	-

Table 10.5: "Common" Parameters

Parameter	Description	Addr.	Data type	Value range	Default	Unit
Reading reliability	Min. reading reliability to be achieved in order to output a read code.	7	UNSIGNED8	1 … 100	4	-
Check digit procedure	Used check digit procedure	8.0 … 8.6	BitArea	0: Standard check digit evaluation 1: No check digit verification 2: MOD10 Weight 3 3: MOD10 Weight 2 4: MOD10 Weight 4_9 5: MOD11 Cont 6: MOD43 7: MOD16	0	-
Check digit output	Turns the check digit output on or off.	8.7	Bit	Check digit output 0: Standard 1: Not standard	0	-
Code type 2	See code type 1	9.0 … 9.5	BitArea	See code type 1	0	-
Number-of-digits mode 2	Specifies how the subsequent numbers of digits are to be interpreted.	10.6	Bit	0: Enumeration 1: Range	0	-
Digits 2.1	Decodable number of digits; in the case of a range, this number defines the lower limit.	10.0 … 10.5	UNSIGNED8	0 … 63	0	-
Digits 2.2	Decodable number of digits; in the case of a range, this number defines the upper limit.	11	UNSIGNED8	0 … 63	0	-
Digits 2.3	Decodable number of digits in the **enumeration** mode.	12	UNSIGNED8	0 … 63	0	-
Digits 2.4	Decodable number of digits in the **enumeration** mode.	13	UNSIGNED8	0 … 63	0	-
Digits 2.5	Decodable number of digits in the **enumeration** mode.	14	UNSIGNED8	0 … 63	0	-
Reading reliability 2	Min. reading reliability to be achieved in order to output a read code.	15	UNSIGNED8	1 … 100	4	-
Check digit procedure 2	Used check digit procedure	16.0 … 16.6	BitArea	0: Standard check digit evaluation 1: No check digit verification 2: MOD10 Weight 3 3: MOD10 Weight 2 4: MOD10 Weight 4_9 5: MOD11 Cont 6: MOD43 7: MOD16	0	-
Check digit output 2	Turns the check digit output on or off.	16.7	Bit	Check digit output 0: Standard 1: Not standard	0	-

Table 10.5: "Common" Parameters

Parameter	Description	Addr.	Data type	Value range	Default	Unit
Code type 3	See code type 1	17.0 … 17.5	BitArea	See code type 1	0	-
Number-of-digits mode 3	Specifies how the subsequent numbers of digits are to be interpreted.	18.6	Bit	0: Enumeration 1: Range	0	-
Digits 3.1	Decodable number of digits; in the case of a range, this number defines the lower limit.	18.0 … 18.5	UNSIGNED8	0 … 63	0	-
Digits 3.2	Decodable number of digits; in the case of a range, this number defines the upper limit.	19	UNSIGNED8	0 … 63	0	-
Digits 3.3	Decodable number of digits in the **enumeration** mode.	20	UNSIGNED8	0 … 63	0	-
Digits 3.4	Decodable number of digits in the **enumeration** mode.	21	UNSIGNED8	0 … 63	0	
Digits 3.5	Decodable number of digits in the **enumeration** mode.	22	UNSIGNED8	0 … 63	0	-
Reading reliability 3	Min. reading reliability to be achieved in order to output a read code.	23	UNSIGNED8	1 … 100	4	-
Check digit procedure 3	Used check digit procedure	24.0 … 24.6	BitArea	0: Standard check digit evaluation 1: No check digit verification 2: MOD10 Weight 3 3: MOD10 Weight 2 4: MOD10 Weight 4_9 5: MOD11 Cont 6: MOD43 7: MOD16	0	-
Check digit output 3	Turns the check digit output on or off.	24.7	Bit	Check digit output 0: Standard 1: Not standard	0	-

Table 10.5: "Common" Parameters

Parameter	Description	Addr.	Data type	Value range	Default	Unit
Code type 4	See code type 1	25.0 … 25.5	BitArea	See code type 1	0	-
Number-of-digits mode 4	Specifies how the subsequent numbers of digits are to be interpreted.	26.6	Bit	0: Enumeration 1: Range	0	-
Digits 4.1	Decodable number of digits; in the case of a range, this number defines the lower limit.	26.0 … 26.5	UNSIGNED8	0 … 63	0	-
Digits 4.2	Decodable number of digits; in the case of a range, this number defines the upper limit.	27	UNSIGNED8	0 … 63	0	-
Digits 4.3	Decodable number of digits in the **enumeration** mode.	28	UNSIGNED8	0 … 63	0	-
Digits 4.4	Decodable number of digits in the **enumeration** mode.	29	UNSIGNED8	0 … 63	0	
Digits 4.5	Decodable number of digits in the **enumeration** mode.	30	UNSIGNED8	0 … 63	0	-
Reading reliability 4	Min. reading reliability to be achieved in order to output a read code.	31	UNSIGNED8	1 … 100	4	-
Check digit procedure 4	Used check digit procedure	32.0 … 32.6	BitArea	0: Standard check digit evaluation 1: No check digit verification 2: MOD10 Weight 3 3: MOD10 Weight 2 4: MOD10 Weight 4_9 5: MOD11 Cont 6: MOD43 7: MOD16	0	-
Check digit output 4	Turns the check digit output on or off.	32.7	Bit	Check digit output 0: Standard 1: Not standard	0	-

Table 10.5: "Common" Parameters

1) Specifying a 0 for the number of digits means that this entry is ignored for the device.

Parameter length: 33 byte

Input data

None

Output data

None

Notice on number of digits:

If 0 is specified in a field for the number of digits, the corresponding parameter is ignored by the device firmware.

Example:

For a code table entry x, the two code lengths 10 and 12 are to be enabled. For this purpose, the following number of digit entries are necessary:

Number of digits mode x = 0 (enumeration)

Number of digits x.1 = 10

Number of digits x.2 = 12

Number of digits x.3 = 0

Number of digits x.4 = 0

Number of digits x.5 = 0

10.5 Overview of the project modules

In the current version, a total of 56 modules are available for use. A **Device Module** (see "Permanently defined parameters / device parameters" on page 108) is used for basic scanner configuration BCL 504*i* and is permanently integrated into the project. Further modules may be included into the project according to requirements and application.

The modules fall into the following categories:

- Parameter module for the configuration of the BCL 504*i*
- Status or control modules that influence the input/output data.
- Modules that may include both parameters and control or status information.

A PROFIBUS module defines the existence and meaning of the input and output data. In addition, it defines the necessary parameters. The arrangement of the data within a module is defined.

The composition of the input/output data is defined via the module list.

The BCL 504*i* interprets the incoming output data and triggers the appropriate reactions in the BCL 504*i*. The interpreter for processing the data is adapted to the module structure during initialisation.

The same applies for the input data. Using the module list and the defined module properties, the input data string is formatted and referenced to the internal data.

During cyclic operation, the input data is then passed on to the master.

Notice!

The modules can be grouped together in any order in the engineering tool. The BCL 504i offers 56 different modules. Each of these modules may only be selected once; otherwise, the BCL 504i ignores the configuration.
The BCL 504i checks its max. permissible number of modules. In addition, it checks the max. permissible total length (244 bytes each) of the input and output data over all selected modules.
The specific limits of the individual modules of the BCL 504i are declared in the GSD file.

The following module overview shows the characteristics of the individual modules:

Module	Description	Module identifier	Parameter[1)]	Outp. data	Inp. data
Decoder					
Code table extension 1	Extension of the existing code table	1	8	0	0
Code table extension 2	Extension of the existing code table	2	8	0	0
Code table extension 3	Extension of the existing code table	3	8	0	0
Code table extension 4	Extension of the existing code table	4	8	0	0
Code type properties	The module permits changing the muted zones as well as the line-gap ratios	5	6	0	0
Code fragment technology	Support of code fragment technology	7	3	0	0
Control					
Activations	Control bits for activation of the standard reading operation	10	1	0	1
Reading gate control	Extended control of the reading gate	11	6	0	0
Multilabel	Output of several barcodes per reading gate	12	2	1	0
Fragmented read result	Transmission of the read results in the fragmented mode	13	1	2	0
Interlinked read result	Interlinking of the individual read results within one reading gate	14	1	0	0
Result Format					
Decoder state	Status display - decoding	20	0	1	0
Decoding result 1	Barcode information 4 bytes max.	21	0	6	0
Decoding result 2	Barcode information 8 bytes max.	22	0	10	0
Decoding result 3	Barcode information 12 bytes max.	23	0	14	0
Decoding result 4	Barcode information 16 bytes max.	24	0	18	0
Decoding result 5	Barcode information 20 bytes max.	25	0	22	0
Decoding result 6	Barcode information 24 bytes max.	26	0	26	0
Decoding result 7	Barcode information 28 bytes max.	27	0	30	0
Data formatting	Specification for formatting the data output	30	23	0	0
Reading gate number	Number of the reading gate since system start-up	31	0	2	0
Number of scans per reading gate	Number of scans per reading gate	32	0	2	0
Code position	Relative position of the barcode label in the scanning beam	33	0	2	0
Reading reliability	Calculated reading reliability for the transmitted barcode.	34	0	2	0
Scans per barcode	Number of scans between the first and the last time of detecting the barcode	35	0	2	0
Scans with information	Number of scans with processed information	36	0	2	0
Decoding quality	Quality of the read result	37	0	1	0
Code direction	Orientation of the barcode	38	0	1	0
Number of digits	Number of digits in the barcode	39	0	1	0
Code type	Barcode type	40	0	1	0
Code position in the swivel range	Code position in the swivel range of an oscillating mirror device	41	0	2	0
Data Processing					
Characteristics filter	Configuration of the characteristics filter	50	TBD	TBD	TBD
Data filtering	Configuration of the data filtering	51	60	0	0
Segmentation acc. to the EAN process	Activation and configuration of the segmentation acc. to the EAN process	52	27	0	0
Segmentation via fixed positions	Activation and configuration of the segmentation via fixed positions	53	37	0	0
Segmentation acc. to identifier and separator	Activation and configuration of the segmentation acc. to identifier and separator	54	29	0	0
String handling parameter	Definition of placeholder characters for barcode segmentation, filtering, completion and reference code processing	55	3	0	0

Table 10.6: Module overview

Module	Description	Module identifier	Parameter[1)]	Outp. data	Inp. data
Device-Functions					
Device status	Display of the device status as well as control bits for reset and standby	60	0	1	1
Laser control	Switch-on and switch-off positions of the laser	61	4	0	0
Display	Display parameter settings	62	3	0	0
Alignment	Alignment mode	63	0	1	1
Oscillating mirror	Oscillating mirror parameter settings	64	6	0	0
Deflection mirror	Deflection mirror parameter settings	65	2	0	0
Switching inputs/outputs SWIO					
Switching input/output SWIO1	Parameter settings SWIO1	70	23	0	0
Switching input/output SWIO2	Parameter settings SWIO2	71	23	0	0
Switching input/output SWIO3	Parameter settings SWIO3	72	23	0	0
Switching input/output SWIO4	Parameter settings SWIO4	73	23	0	0
SWIO status and control	Handling of switching input and switching output signals	74	0	2	2
Data output					
Sorting	Sorting support	80	3	0	0
Reference code comparator 1	Definition of the operation mode of reference code comparator 1	81	8	0	0
Reference code comparator 2	Definition of the operation mode of reference code comparator 2	82	8	0	0
Reference code comparison pattern 1	Definition of the 1st comparison pattern	83	31	0	0
Reference code comparison pattern 2	Definition of the 2nd comparison pattern	84	31	0	0
Special Functions					
Status and control	Grouping of multiple status and control bits	90	0	1	0
AutoReflAct	Automatic reflector activation	91	2	0	0
AutoControl	Automatic monitoring of the reading properties	92	3	1	0

Table 10.6: Module overview

1) The number of parameter bytes does not include the constant module number, which is always transmitted in addition.

Notice!

For the standard case, at least module 10 (activation) and one of modules 21 … 27 (decoding result 1 … 7) should be integrated.

10.6 Decoder modules

10.6.1 Modules 1-4 – Code table extensions 1 to 4

Description

The modules extend the code type tables of the device parameters and permit the additional definition of further 4 code types together with the respective number of digits.

Parameters

Parameter	Description	Rel. addr.	Data type	Value range	Default	Unit
Code type	Released code type; no code means that all subsequent code tables are also deactivated. The valid number of digits also depends on the code type.	0.0 … 0.5	BitArea	0: 0: No code 1: 2/5 Interleaved 2: Code39 3: Code32 6: UPC, UPCE 7: EAN8, EAN13 8: Code128 10: EAN Addendum 11: Codabar 12: Code93 13: RSS-14 14: RSS Limited 15: RSS Expanded	0	-
Number-of-digits mode	Interpretation of the number of digits	1.6	Bit	0: Enumeration 1: Range	0	-
Digits 1[1)]	Decodable number of digits; in the case of a range, this number defines the lower limit.	1.0 … 1.5	UNSIGNED8	0 … 63	0	-
Digits 2	Decodable number of digits; in the case of a range, this number defines the upper limit.	2	UNSIGNED8	0 … 63	0	-
Digits 3	Decodable number of digits in the enumeration mode.	3	UNSIGNED8	0 … 63	0	-
Digits 4	Decodable number of digits in the enumeration mode.	4	UNSIGNED8	0 … 63	0	-
Digits 5	Decodable number of digits in the enumeration mode.	5	UNSIGNED8	0 … 63	0	-

Table 10.7: Parameters for modules 1-4

Parameter	Description	Rel. addr.	Data type	Value range	Default	Unit
Reading reliability	Min. reading reliability to be achieved in order to output a read code.	6	UNSIGNED8	1 … 100	4	-
Check digit procedure	Used check digit procedure	7.0 … 7.6	BitArea	0: Standard check digit evaluation 1: No check digit verification 2: MOD10 Weight 3 3: MOD10 Weight 2 4: MOD10 Weight 4_9 5: MOD11 Cont 6: MOD43 7: MOD16	0	-
Check digit output	Turns the check digit output on or off. >Standard means that the check digit is transmitted according to the applicable standard for the selected code type If **no check digit transmission is intended** for the selected code type, then "**Standard**" means that the check digit is **not** transmitted and "**Not Standard**" means that the check digit is transmitted anyway.	7.7	Bit	Check digit output 0: Standard 1: Not standard	0	-

Table 10.7: Parameters for modules 1-4

1) Cf. in section 10.4.4 Permanently defined parameters / device parameters the notice on number of digits.

Parameter length

8 bytes

Input data

None

Output data

None

10.6.2 Module 5 – Code type features (symbology)

Description

The module defines extended features for various code types.

Parameters

Parameter	Description	Addr.	Data type	Value range	Default	Unit
Maximum width deviation	Max. permitted width deviation of a character in percent of the directly adjacent character.	0	UNSIGNED8	0 … 100	15	%
Code 39 max. element ratio	Permissible ratio between maximum and minimum element of Code 39.	1	UNSIGNED8	0 … 255	8	-
Code 39 character gap	Permissible ratio for the gap between two characters for Code 39.	2	UNSIGNED8	0 … 255	3	-
Codabar max. element ratio	Permissible ratio between maximum and minimum element of the Codabar code.	3	UNSIGNED8	0 … 255	8	-
Codabar character gap	Permissible ratio for the gap between two characters for the Codabar code.	4	UNSIGNED8	0 … 255	3	-
Codabar Monarch Mode	The decoding of a Monarch barcode as Codabar barcode can be switched on or off.	5.0	Bit	0: Off 1: On	0	-
Codabar start/ stop character	Switches the transmission of a start and stop character for the Codabar code on and off.	5.1	Bit	0: Off 1: On	0	-
UPC-E extension	Switches the extension of a UPC-E code to a UPC-A result on and off.	5.4	Bit	0: Off 1: On	0	-
Code 128: activate EAN header	Switches the output of the EAN header on and off.	5.5	Bit	0: Off 1: On	0	-
Code 39 conversion	Defines the conversion method used for Code 39.	5.6 … 5.7	BitArea	0: Standard (usual conversion method) 1: Standard ASCII (combination of standard method and ASCII method) 2: ASCII (This conversion method uses the entire ASCII character set)	0	-

Table 10.8: Parameters for module 5

Parameter length

6 byte

Input data

None

Output data

None

10.6.3 Module 7 – Code fragment technology

Description

Module for supporting the code fragment technology.

Parameters

Parameter	Description	Addr.	Data type	Value range	Default	Unit
Maximum width ratio	The maximum width ratio is used to determine the light zones. The light zones identify the beginning or end of patterns.	0	UNSIGNED8	0 … 255	13	-
Minimum number of elements	A pattern must have at least this minimum number of duo-elements, i.e. no patterns which have fewer duo-elements.	1 … 2	UNSIGNED16	2 … 400	6	-
Code fragment mode	This parameter can be used to switch CRT mode on and off.	3.0	Bit	0: Switched off 1: Switched on	1	-
Processing end at end of label	If this parameter is set, a decoded barcode is only completely decoded after the scanning beam has exited the entire barcode.	3.2	Bit	0: Switched off 1: Switched on	0	-

Table 10.9: Parameters for module 7

Parameter length

4 byte

Input data

None

Output data

None

Processing end at end of label:

If this parameter is set, a decoded barcode is only completely decoded after the scanning beam has exited the entire barcode. This mode is useful if the quality of the barcode is to be assessed, since more scans are now available for the quality evaluation of the barcode.

This parameter should be set if the AutoControl function is activated (see chapter 10.15.3 "Module 92 – AutoControl"). If the parameter is not set, the barcode is immediately detected and processed further as soon as all necessary barcode elements are available.

10.7 Control modules

10.7.1 Module 10 – Activations

Description

The module defines the control signals for the reading operation of the barcode reader. It is possible to select between standard reading operation and handshake operation.

In handshake operation, the controller must acknowledge the data reception via the ACK bit before the new data is written into the input area.

After acknowledging the last decoding result, the input data is reset (filled with zeros).

Parameters

Parameter	Description	Addr.	Data type	Value range	Default	Unit
Mode	The parameter defines the mode in which the activation module is operated.	0	UNSIGNED8	0: Without ACK[1)] 1: With ACK[2)]	0	-

Table 10.10: Parameters for module 10

1) corresponds to BCL34 module 18
2) corresponds to BCL34 module 19

Parameter length

1 byte

Input data

None

Output data

Output data	Description	Addr.	Data type	Value range	Init value	Unit
Reading gate	Signal for activating the reading gate	0.0	Bit	1 -> 0: Reading gate off 0 -> 1: Reading gate active	0	-
	Free	0.1	Bit		0	-
	Free	0.2	Bit		0	-
	Free	0.3	Bit		0	-
Data acknowl-edgement	This control bit signals that the transmitted data have been processed by the master. Only relevant in handshake mode (with ACK).	0.4	Bit	0 -> 1: Data has been processed by the master 1 -> 0: Data has been processed by the master	0	-
Data reset	Deletes decoding results that may have been stored and resets the input data of all modules.	0.5	Bit	0 -> 1: Data reset	0	-
	Free	0.6	Bit			
	Free	0.7	Bit			

Table 10.11: Output data for module 10

Output data length

1 byte consistent

Notice!

If several barcodes are decoded in sequence without the acknowledge mode having been activated, the input data of the result modules are overwritten with the respective most recently read decoding result.
If a data loss in the control is to be avoided in such a case, mode 1 (with Ack) should be activated.
If multiple decoding results occur within one reading gate, it is possible - dependent on the cycle time - that only the last decoding result is visible on the bus. In this case, the acknowledge mode MUST be used. There is otherwise a risk of data loss.
Multiple, individual decoding results may occur within one reading gate if the Module 12 – Multi-label (see chapter 10.7.3) or one of the identifier modules (see chapter 10.10 "Identifier" beginning on page 140) is used.

Data reset behaviour:

If the data reset control bit is activated, the following actions are carried out:

1. Deletion of decoding results that may still be stored.
2. Reset of module 13 - fragmented read result (see chapter 10.7.4), i.e., even a partially transmitted read result is deleted.
3. Deletion of the input data areas of all modules. Exception: The input data of module 60 - device status (see chapter 10.11.1) is not deleted. For the status byte of decoding result modules 20 … 27 (see chapter 10.8.2), the two toggle bytes and the reading gate status remain unchanged.

10.7.2 Module 11 – Reading gate control

Description

With the module, the reading gate control of the barcode reader can be adapted to the application. With different parameters from the barcode reader, a time-controlled reading gate may be created. In addition, it defines the internal criteria for the reading gate end and the completeness inspection.

Parameters

Parameter	Description	Addr.	Data type	Value range	Default	Unit
Automatic reading gate repeat	The parameter defines the automatic repeat of reading gates	0	Byte	0: No 1: Yes	0	-
Reading gate end mode/ completeness mode	This parameter can be used to configure the completeness inspection.	1	Byte	0: **Independent of decoding**, i.e., the reading gate is not terminated prematurely. 1: **Dependent on decoding**, i.e, the reading gate is terminated if the configured number of barcodes to be decoded has been reached. 1) 2: **DigitRef table-dependent**, i.e., the reading gate is terminated if each barcode stored in the code type table has been decoded. 2) 3: **Ident list dependent**, i.e., the reading gate is terminated if each identifier stored in a list could be segmented via a respective barcode segmentation. 3) 4: **Reference code comparison**, i.e., the reading gate is terminated if a positive reference code comparison has taken place. 4)	1	-
Restart delay	The parameter specifies a time after which a reading gate is restarted. The BCL 504*i* generates its own periodic reading gate. The configured time is active only if the automatic reading gate repeat is switched on.	2	UNSIGNED16	0 … 65535	0	ms
Max. reading gate time when scanning	The parameter switches off the reading gate after the set time has elapsed, thus limiting the reading gate to the set period.	4	UNSIGNED16	1 … 65535 0: Reading gate deactivation is switched off.	0	ms

Table 10.12: Parameters for module 11

1) See "Module 12 – Multi-label" on page 123.
2) Corresponds to the settings carried out via the device module (chapter 10.4.4) or Modules 1-4 – Code table extensions 1 to 4.
3) See "Identifier" on page 140, modules 52-54 "Identifier filter string"
4) See Module 83 – Reference code comparison pattern 1 and Module 84 – Reference code comparison pattern 2

Parameter length

6 byte

Input data

None

Output data

None

10.7.3 Module 12 – Multi-label

Description

The module permits the definition of multiple barcodes with a different number of digits and/ or code types in the reading gate and provides the necessary input data.

Parameters

Parameter	Description	Addr.	Data type	Value range	Default	Unit
Minimum number of barcodes	Minimum number of different barcodes scanned for per reading gate.	0	UNSIGNED8	0 … 64	1	-
Maximum number of barcodes	Maximum number of different barcodes scanned for per reading gate. Only if this number of barcodes has been reached, the reading gate is terminated prematurely.[1)]	1	UNSIGNED8	0 … 64	1	-

Table 10.13: Parameters for module 12

1) Compare with "Module 11 – Reading gate control" on page 121, parameter "reading gate termination mode"

Parameter length

2 byte

Input data

Input data	Description	Addr.	Data type	Value range	Init value	Unit
Number of decoding results	Number of decoding results which have not been fetched.	0	UNSIGNED8	0 … 255	0	-

Table 10.14: Input data for module 12

Input data length

1 byte

Output data

None

This module is used to set the maximum and minimum number of barcodes which are to be decoded within a reading gate.

If parameter "minimum number of barcodes" = 0, it is not taken into account at the decoder controller. If it is not equal to 0, this means that the barcode reader expects a number of labels within the set range.

If the number of decoded barcodes is within the set limits, no additional "No Reads" are output.

Notice!

When using this module, the ACK mode should be activated (see Module 10 – Activations, "Mode" parameter). Otherwise there is a risk of losing decoding results if the control is not fast enough.

10.7.4 Module 13 – Fragmented read result

Description

The module defines the transfer of fragmented read results. To occupy few i/o-data, the read results may be split into several fragments with this module. The fragments can then be transmitted one after another with a handshake.

Parameters

Parameter	Description	Addr.	Data type	Value range	Default	Unit
Fragment length	The parameter defines the maximum length of the barcode information per fragment.	0	UNSIGNED8	1 … 28	0	-

Table 10.15: Parameters for module 13

Parameter length

1 byte

Input data

Input data	Description	Addr.	Data type	Value range	Init value	Unit
Fragment number	Current fragment number	0.0 … 0.3	Bitarea	0 … 15	0	-
Remaining fragments	Number of fragments which still have to be read for a complete result.	0.4 … 0.7	Bitarea	0 … 15	0	-
Fragment size	Fragment length, always corresponds to the configured fragment length, except for the last fragment.	1	UNSIGNED8	0 … 28	0	-

Table 10.16: Input data for module 13

Input data length

2 byte consistent

Output data

None

10.7.5 Module 14 – Interlinked read result

Description

This module is used to switch to a mode in which all decoding results within one reading gate are combined into a single read result.

Parameters

Parameter	Description	Addr.	Data type	Value range	Default	Unit
Delimiter	This parameter is used to define a delimiter that is inserted between two individual decoding results.	0	UNSIGNED8	1 … 255 0: No delimiter is used.	';'	-

Table 10.17: Parameters for module 13

Parameter length

1 byte

Input data

None

Output data

None

Notice!

An interlinked read result also requires Module 12 – Multi-label. In this mode, the additional information transmitted in modules 31ff relates to the last decoding result in the chain.

10.8 Result Format

In the following various modules for the output of decoding results are listed. They have the same structure but different output lengths. The PROFIBUS module concept does not cater for modules of variable data length.

Notice!

Modules 20 … 27 are, thus, to be regarded as alternatives and should not be used in parallel.
Modules 30 … 40, on the other hand, can be combined freely with the decoding result modules.

10.8.1 Module 20 – Decoder state

Description

The module indicates the state of the decoding and of the automatic decoder configuration.

Parameters

None

Input data

Input data	Description	Addr.	Data type	Value range	Init value	Unit
Reading gate state	The signal indicates the current state of the reading gate[1].	0.0	Bit	0: Off 1: On	0	-
New result	The signal indicates whether a new decoding has occurred.	0.1	Bit	0: No 1: Yes	0	-
Result state	The signal indicates whether the barcode has been read successfully.	0.2	Bit	0: Successful reading 1: NOREAD	0	-
Further results in the buffer	The signal indicates whether further results are in the buffer.	0.3	Bit	0: No 1: Yes	0	-
Buffer overflow	The signal indicates that result buffers are occupied and the decoder rejects data.	0.4	Bit	0: No 1: Yes	0	-
New decoding	Toggle bit indicates whether decoding has occurred.	0.5	Bit	0->1: New result 1->0: New result	0	-
Result state	Toggle bit indicates that the barcode has not been read.	0.6	Bit	0->1: NOREAD 1->0: NOREAD	0	-
Waiting for acknowledgement	This signal represents the internal state of the control.	0.7	Bit	0: Base state 1: Control waiting for acknowledgement from the PROFIBUS master	0	-

Table 10.18: Input data for module 20

1) **Attention**: This does not necessarily correspond to the state at the time the barcode is scanned.

Input data length

1 byte

Output data

None

Remarks

The following bits are constantly updated, i.e. they are updated immediately after the respective event occurs:

Reading gate state

- Further results in the buffer
- Buffer overflow
- Waiting for acknowledgement

All other flags refer to the currently output decoding result.

If the input data is reset to the init. value (cf. "Module 30 – Data formatting" on page 130), the following bits are reset:

- New result
- Result state

All others remain unchanged.

Data reset behaviour:

Upon data reset (see Module 10 – Activations), the input data is deleted, except for the reading gate status and the two toggle bits.

10.8.2 Modules 21-27 – Decoding result

Description

The module defines the transfer of the actually decoded read results. The data is transmitted consistently over the entire range.

Parameters

None

Input data

Module No.	Input data	Description	Addr.	Data type	Value range	Init value	Unit
21 … 27	Reading gate state	The signal indicates the current state of the reading gate.[1)]	0.0	Bit	0: Off 1: On	0	-
21 … 27	New result	Signal indicates whether a new decoding result is present.	0.1	Bit	0: No 1: Yes	0	-
21 … 27	Result state	Signal indicates whether the barcode has been read successfully.	0.2	Bit	0: Successful reading 1: NOREAD	0	-
21 … 27	Further results in the buffer	Signal indicates whether further results are in the buffer.	0.3	Bit	0: No 1: Yes	0	-
21 … 27	Buffer overflow	Signal indicates that result buffers are occupied and the decoder rejects data.	0.4	Bit	0: No 1: Yes	0	-
21 … 27	New result	Toggle bit, indicates that a new decoding result is present.	0.5	Bit	0->1: New result 1->0: New result	0	-
21 … 27	Result state	Toggle bit indicates that the barcode has not been read.	0.6	Bit	0->1: NOREAD 1->0: NOREAD	0	-
21 … 27	Waiting for acknowledgement	This signal represents the internal state of the control.	0.7	Bit	0: Base state 1: Control waiting for acknowledgement from the PROFIBUS master	0	-
21 … 27	Barcode data length	Data length of the actual barcode information.[2)]	1	UNSIGNED8	0-48	0	-
21	Data	Barcode information with a length of consistently 4 bytes.	2..	4x UNSIGNED8	0-FFh	0	-
22	Data	Barcode information with a length of consistently 8 bytes.	2..	8x UNSIGNED8	0-FFh	0	-
23	Data	Barcode information with a length of consistently 12 bytes.	2..	12x UNSIGNED8	0-FFh	0	-
24	Data	Barcode information with a length of consistently 16 bytes.	2..	16x UNSIGNED8	0-FFh	0	-
25	Data	Barcode information with a length of consistently 20 bytes.	2..	20x UNSIGNED8	0-FFh	0	-
26	Data	Barcode information with a length of consistently 24 bytes.	2..	24x UNSIGNED8	0-FFh	0	-
27	Data	Barcode information with a length of consistently 28 bytes.	2..	28x UNSIGNED8	0-FFh	0	-

Table 10.19: Input data for modules 21 … 27

1) Attention: This does not necessarily correspond to the state at the time the barcode is scanned

2) If the barcode information (barcode and, possibly, other items such as the check sum) fits in the selected module width, this value reflects the length of the transmitted data. A value larger than the module width indicates a loss of information caused by a module width which has been selected too small.

Input data

2 bytes consistently + 4..28 bytes of barcode information depending on the module

Output data

None

Remarks

The remarks for module 20 – decoder state, apply in an analogous manner.

In addition, all bytes beginning with address 1 are reset to the init. value.

Notice!

Shortening decoding results that are too long: If the barcode information (barcode possibly including supplementary information such as the check sum) does not fit in the selected module width, the decoding results are shortened. This shortening is either from the left or the right depending on the setting in Module 30 – Data formatting.

Shortening is indicated by the passed barcode data length.

10.8.3 Module 30 – Data formatting

Description

The module defines the output string for the case that the BCL 504*i* could not read a barcode. In addition, the initialisation of the data fields and the definition of unused data ranges may be set.

Parameters

Parameter	Description	Addr.	Data type	Value range	Default	Unit
Text in the case of mis-reading	The parameter defines the output characters if no barcode could be read.	0	STRING 20 characters null terminated	1 … 20 bytes of ASCII characters	63 ("?")	-
Decoding result at reading gate start	The parameter defines the state of the data at the start of the reading gate.	20.5	Bit	0: Input data remain on the old value 1: Input data is reset to the init value	0	-
Data align-ment	The parameter defines the alignment of the data in the result field[1)]	21.1	Bit	0: Left-justified 1: Right-justified	0	-
Fill mode	The parameter defines the fill mode for the unoc-cupied data ranges	21.4 … 21.7	Bitarea	0: No fill up 3: Fill up to the transmission length	3	-
Fill character	The parameter defines the character which is used for filling up the data ranges.	22	UNSIGNED8	0 … FFh	0	-

Table 10.20: Parameters for module 30

1) and thus also controls possible shortening of a decoding result that is too large.

Parameter length

23 byte

Input data

None

Output data

None

Comment

The "decoding result at reading gate start" parameter is only taken into account if the "Without ACK" mode is set (cf. "Module 10 – Activations" on page 119).

10.8.4 Module 31 – Reading gate number

Description

The module defines input data for the communication of the number of reading gates since system start.

Parameters

None

Input data

Input data	Description	Addr.	Data type	Value range	Init value	Unit
Reading gate number	The BCL 504*i* transmits the current reading gate number. The reading gate number is initialised with the system start and is then incremented continuously. At 65535, an overflow occurs and the counter starts afresh from 0.	0 … 1	UNSIGNED16	0 … 65535	0	-

Table 10.21: Input data for module 31

Input data length

2 byte consistent

Output data

None

10.8.5 Module 32 – Reading gate time

Description

This module returns the time between opening and closing of the last reading gate.

Parameters

None

Input data

Input data	Description	Addr.	Data type	Value range	Init value	Unit
Opening duration of the reading gate	Opening duration of the last reading gate in ms.	0 … 1	UNSIGNED16	0 … 65535 If the range is exceeded, the value remains at 65535	0	ms

Table 10.22: Input data for module 32

Input data length

2 byte consistent

Output data

None

10.8.6 Module 33 – Code position

Description

The module defines input data for the communication of the relative barcode position in the laser beam.

Parameters

None

Input data

Input data	Description	Addr.	Data type	Value range	Init value	Unit
Code position	Relative position of the barcode in the scanner beam. The position is normalised to the zero position (middle position). Specified in 1/10 degrees.	0 … 1	SIGNED16	±450	0	1/10 degree

Table 10.23: Input data for module 33

Input data length

2 byte consistent

Output data

None

10.8.7 Module 34 – Reading reliability (equal scans)

Description

The module defines the input data for the communication of the calculated reading reliability. The value refers to the currently output barcode.

Parameters

None

Input data

Input data	Description	Addr.	Data type	Value range	Init value	Unit
Reading reliability (Equal scans)	Calculated reading reliability for the transmitted barcode.	0 … 1	UNSIGNED16	0 … 65535	0	-

Table 10.24: Input data for module 34

Input data length

2 byte consistent

Output data

None

10.8.8 Module 35 – Barcode length

Description

The module defines the input data for the communication of the length of the currently output barcode.

Parameters

None

Input data

Input data	Description	Addr.	Data type	Value range	Init value	Unit
Barcode length	Length/duration of the currently output barcode, beginning with the code position specified in module 35 in 1/10 degrees.	0 … 1	UNSIGNED16	1 … 900	1	1/10 degree

Table 10.25: Input data for module 35

Input data length

2 byte consistent

Output data

None

10.8.9 Module 36 – Scans with information

Description

The module defines input data for the communication of the calculated number of scans which provided information contributing to the result of the barcode.

Parameters

None

Input data

Input data	Description	Addr.	Data type	Value range	Init value	Unit
Scans with information per barcode	See above	0 … 1	UNSIGNED16	0 … 65535	0	-

Table 10.26: Input data for module 36

Input data length

2 byte consistent

Output data

None

10.8.10 Module 37 – Decoding quality

Description

The module defines input data for the communication of the calculated decoding quality of the currently transmitted barcode.

Parameters

None

Input data

Input data	Description	Addr.	Data type	Value range	Init value	Unit
Decoding quality	Decoding quality of the transmitted barcode	0	UNSIGNED8	0 … 100	0	1%

Table 10.27: Input data for module 37

Input data length

1 byte consistent

Output data

None

10.8.11 Module 38 – Code direction

Description

The module defines input data for the communication of the detected code direction of the currently transmitted barcode.

Parameters

None

Input data

Input data	Description	Addr.	Data type	Value range	Init value	Unit
Code direction	Code direction of the transmitted barcode	0	UNSIGNED8	0: Normal 1: Inverted 2: Unknown	0	-

Table 10.28: Input data for module 38

Input data length

1 byte

Output data

None

Comment:

A decoding result of type "No Read" has as code direction the value 2 = unknown!

10.8.12 Module 39 – Number of digits

Description
The module defines input data for the communication of the number of digits of the currently transmitted barcode.

Parameters
None

Input data

Input data	Description	Addr.	Data type	Value range	Init value	Unit
Number of digits	Number of digits of the transmitted barcode	0	UNSIGNED8	0 … 48	0	-

Table 10.29: Input data for module 39

Input data length
1 byte

Output data
None

10.8.13 Module 40 – Code type

Description
The module defines the input data for the communication of the code type of the currently transmitted barcode.

Parameters
None

Input data

Input data	Description	Addr.	Data type	Value range	Init value	Unit
Code type	Code type of the transmitted barcode	0	UNSIGNED8	0: 0: No code 1: 2/5 Interleaved 2: Code39 6: UPC, UPCE 7: EAN8, EAN13 8: Code128, EAN128 10: EAN Addendum 11: Codabar 12: Code93 13: RSS-14 14: RSS Limited 15: RSS Expanded	0	-

Table 10.30: Input data for module 40

Input data length
1 byte

Output data
None

10.8.14 Module 41 – Code position in the swivel range

Description

The module defines input data for the communication of the relative barcode position in the swivel range of an oscillating mirror device.

Parameters

None

Input data

Input data	Description	Addr.	Data type	Value range	Init value	Unit
Position in the swivel range	Relative position of the barcode in the swivel range. The position is normalised to the zero position (middle position). Specified in 1/10 degrees.	0 … 1	SIGNED16	-200 … +200	0	1/10°

Table 10.31: Input data for module 41

Input data length

2 byte

Output data

None

10.9 Data Processing

10.9.1 Module 50 – Characteristics filter

Description

Configuration of the characteristics filter.
This filter can be used to set how barcodes with identical content are handled and what criteria are to be taken into account in determining the likeness.

Parameters

Parameter	Description	Addr.	Data type	Value range	Default	Unit
Handling of identical barcode information	Determines how barcodes with the same content are to be managed	0	UNSIGNED8	0: All barcodes are stored and output. 1: Only non-identical barcode contents are output. 2: Two identical barcodes arranged in T-shape are treated as a single barcode.	1	-
Comparison parameter - code type	If this criterion has been activated, the barcode type is used to determine whether the barcodes are identical.	1.0	Bit	0: deactivated 1: activated	1	-
Comparison parameter - barcode content	If this criterion has been activated, the barcode content is used to determine whether the barcodes are identical.	1.1	Bit	0: deactivated 1: activated	1	-
Comparison parameter - barcode direction	If this criterion has been activated, the barcode direction is used to determine whether the barcodes are identical.	1.2	Bit	0: deactivated 1: activated	1	-
Comparison parameter - scan position	If this parameter is not equal to 0, the barcode position in the scanning beam is used to determine whether identical barcodes have already been decoded. In this case, a +/- bandwidth in degrees must be specified, within which the same barcode is permitted to be in the scanning beam.	2 … 3	UNSIGNED16	0 … 450	0	1/10 degree

Table 10.32: Parameters for module 50

Parameter	Description	Addr.	Data type	Value range	Default	Unit
Comparison parameter - oscillating mirror position	If this parameter is not equal to 0, the barcode position in the swivel range of the oscillating mirror is used to determine whether identical barcodes have already been decoded. A +/- bandwidth in degrees must then be specified, within which the same barcode is permitted to be in the oscillating mirror swivel range.	4 … 5	UNSIGNED16	0 … 200	0	1/10 degree
Comparison parameter - scanning time info	If this parameter is not equal to 0, the decoding time (time at which the barcode was decoded) is used to determine whether identical barcodes have already been detected. Here, a difference time specified in milliseconds ensures that identical barcodes may only occur within this time.	6 … 7	UNSIGNED16	0 … 65535	0	ms

Table 10.32: Parameters for module 50

Parameter length

8 byte

Input data

None

Output data

None

All comparison criteria are AND linked; this means all active comparisons must be fulfilled before the just-decoded barcode can be identified as already decoded and then deleted.

10.9.2 Module 51 – Data filtering

Description

Configuration of the data filter.

Parameters

Parameter	Description	Addr.	Data type	Value range	Default	Unit
Barcode filter string 1	Filter expression 1	0	STRING 30 characters null terminated	1 … 30 bytes of ASCII characters	\00	-
Barcode filter string 2	Filter expression 2	30	STRING 30 characters null terminated	1 … 30 bytes of ASCII characters	\00	-

Table 10.33: Parameters for module 51

Parameter length

60 byte

Input data

None

Output data

None

Filter string

The filter string is used to define passthrough filters for barcodes.

An arbitrary number of '?' are permitted as placeholders for an arbitrary character at exactly this position. Also permitted are '*' as placeholders for a character sequence of arbitrary length, and an 'x' if the character at the respective position is to be deleted.

10.10 Identifier

The following modules can be used to specify the segmentation process to be used when extracting identifiers from the barcode data.

When a module is configured, the associated segmentation process is activated. If none of the modules is configured, no segmentation takes place.

Therefore, the modules can only be used one at a time and not simultaneously.

Notice!

When using one of the following modules, multiple results may occur within a reading gate. If there are multiple results, acknowledge mode must be used (cf. "Module 10 – Activations" on page 119, "Mode" parameter and the additional notices); data may otherwise be lost!

10.10.1 Module 52 – Segmentation according to the EAN process

Description

The module activates the segmentation according to the EAN process. The parameters specify the identifiers to searched for and the output mode.

Parameters

Parameter	Description	Addr.	Data type	Value range	Default	Unit
Identifier list						
Identifier 1	The identifier string is used for the identifier list and the filtering according to the segmentation.	0	STRING 5 characters null terminated	1 … 5 bytes of ASCII characters	'*'	-
Identifier 2	See identifier 1.	5	STRING 5 characters null terminated	1 … 5 bytes of ASCII characters	\0	-
Identifier 3	See identifier 1.	10	STRING 5 characters null terminated	1 … 5 bytes of ASCII characters	\0	-
Identifier 4	See identifier 1.	15	STRING 5 characters null terminated	1 … 5 bytes of ASCII characters	\0	-
Identifier 5	See identifier 1.	20	STRING 5 characters null terminated	1 … 5 bytes of ASCII characters	\0	-
Identifier output						
Output with identifier	If this switch is not set, the output of the identifiers is suppressed. In this case, only the data values belonging to the identifiers are displayed.	25.0	Bit	0: Output of the identifiers is suppressed. 1: Identifiers are output.	1	-
Output delimiter	This delimiter, if not equal to 0, is inserted between the identifier and the associated data value in the output.	26	UNSIGNED8	0 … 127	0	-

Table 10.34: Parameters for module 52

Parameter length

27 byte

Input data

None

Output data

None

Identifier string n (n = 1 … 5)

The identifier string defines both the identifier list for the segmentation and the passthrough filter for the subsequent filtering.

The string may contain wildcards. That is, an arbitrary number of '?' are permitted as placeholders for an arbitrary character at exactly that position.

Also permitted are '*' as placeholders for a character sequence of arbitrary length, and an 'x' if the character at the respective position is to be deleted. There are a total of 5 identifier strings.

An identifier with less than 5 characters must be null terminated. However, if the identifier string consists of exactly 5 characters, it does not have to be null terminated.

10.10.2 Module 53 – Segmentation via fixed positions

Description

The module activates the segmentation via fixed positions. The parameters specify the identifiers to be searched for, the output mode, and the positions.

Parameters

Parameter	Description	Addr.	Data type	Value range	Default	Unit
Identifier list						
Identifier 1	The identifier string is used for the identifier list and the filtering according to the segmentation.	0	STRING 5 characters null terminated	1 … 5 bytes of ASCII characters	'*'	-
Identifier 2	See identifier 1.	5	STRING 5 characters null terminated	1 … 5 bytes of ASCII characters	\0	-
Identifier 3	See identifier 1.	10	STRING 5 characters null terminated	1 … 5 bytes of ASCII characters	\0	-
Identifier 4	See identifier 1.	15	STRING 5 characters null terminated	1 … 5 bytes of ASCII characters	\0	-
Identifier 5	See identifier 1.	20	STRING 5 characters null terminated	1 … 5 bytes of ASCII characters	\0	-
Identifier output						

Table 10.35: Parameters for module 53

Parameter	Description	Addr.	Data type	Value range	Default	Unit
Output with identifier	If this switch is not set, the output of the identifiers is suppressed. In this case, only the data values belonging to the identifiers are displayed.	25.0	Bit	0: Output of the identifiers is suppressed. 1: Identifiers are output.	1	-
Output delimiter	This delimiter, if not equal to 0, is inserted between the identifier and the associated data value in the output.	26	UNSIGNED8	0 … 127	0	-
Fixed positions						
Start position of the 1st identifier	Specifies the position of the first character of the first identifier in the data string of the barcode. The first character in the barcode has position 1. If the parameter is = 0, it is deactivated.	27	UNSIGNED8	0 … 127	0	-
Start position of the 1st data value	Specifies the position of the first character of the first data value in the data string of the barcode. The first character in the barcode has position 1. If the parameter is = 0, it is deactivated.	28	UNSIGNED8	0 … 127	0	-
Start position of the 2nd identifier	Specifies the position of the first character of the second identifier in the data string of the barcode. The first character in the barcode has position 1. If the parameter is = 0, it is deactivated.	29	UNSIGNED8	0 … 127	0	-
Start position of the 2nd data value	Specifies the position of the first character of the second data value in the data string of the barcode. The first character in the barcode has position 1. If the parameter is = 0, it is deactivated.	30	UNSIGNED8	0 … 127	0	-
Start position of the 3rd identifier	Specifies the position of the first character of the third identifier in the data string of the barcode. The first character in the barcode has position 1. If the parameter is = 0, it is deactivated.	31	UNSIGNED8	0 … 127	0	-
Start position of the 3rd data value	Specifies the position of the first character of the third data value in the data string of the barcode. The first character in the barcode has position 1. If the parameter is = 0, it is deactivated.	32	UNSIGNED8	0 … 127	0	-
Start position of the 4th identifier	Specifies the position of the first character of the fourth identifier in the data string of the barcode. The first character in the barcode has position 1. If the parameter is = 0, it is deactivated.	33	UNSIGNED8	0 … 127	0	-

Table 10.35: Parameters for module 53

Parameter	Description	Addr.	Data type	Value range	Default	Unit
Start position of the 4th data value	Specifies the position of the first character of the fourth data value in the data string of the barcode. The first character in the barcode has position 1. If the parameter is = 0, it is deactivated.	34	UNSIGNED8	0 … 127	0	-
Start position of the 5th identifier	Specifies the position of the first character of the fifth identifier in the data string of the barcode. The first character in the barcode has position 1. If the parameter is = 0, it is deactivated.	35	UNSIGNED8	0 … 127	0	-
Start position of the 5th data value	Specifies the position of the first character of the fifth data value in the data string of the barcode. The first character in the barcode has position 1. If the parameter is = 0, it is deactivated.	36	UNSIGNED8	0 … 127	0	-

Table 10.35: Parameters for module 53

Parameter length

37 byte

Input data

None

Output data

None

Identifier string n (n = 1 … 5)

The identifier string defines both the identifier list for the segmentation and the passthrough filter for the subsequent filtering.

The string may contain wildcards. That is, an arbitrary number of '?' are permitted as placeholders for an arbitrary character at exactly that position.

Also permitted are '*' as placeholders for a character sequence of arbitrary length, and an 'x' if the character at the respective position is to be deleted. There are a total of 5 identifier strings.

An identifier with less than 5 characters must be null terminated. However, if the identifier string consists of exactly 5 characters, it does not have to be null terminated.

10.10.3 Module 54 – Segmentation according to identifier and separator

Description

This module activates the segmentation according to identifier and separator. The parameters specify the identifiers to be searched for, the output mode, and the parameters for the identifier/separator algorithm.

Parameters

Parameter	Description	Addr.	Data type	Value range	Default	Unit
Identifier list						
Identifier 1	The identifier string is used for the identifier list and the filtering according to the segmentation.	0	STRING 5 characters null terminated	1 … 5 bytes of ASCII characters	'*'	-
Identifier 2	See identifier 1.	5	STRING 5 characters null terminated	1 … 5 bytes of ASCII characters	\0	-
Identifier 3	See identifier 1.	10	STRING 5 characters null terminated	1 … 5 bytes of ASCII characters	\0	-
Identifier 4	See identifier 1.	15	STRING 5 characters null terminated	1 … 5 bytes of ASCII characters	\0	-
Identifier 5	See identifier 1.	20	STRING 5 characters null terminated	1 … 5 bytes of ASCII characters	\0	-
Identifier output						
Output with identifier	If this switch is not set, the output of the identifiers is suppressed. In this case, only the data values belonging to the identifiers are displayed.	25.0	Bit	0: Output of the identifiers is suppressed. 1: Identifiers are output.	1	-
Output delimiter	This delimiter, if not equal to 0, is inserted between the identifier and the associated data value in the output.	26	UNSIGNED8	0 … 127	0	-
Segmentation acc. to identifier and separator						
Identifier length	Fixed length of all identifiers in the segmentation process. After this length, the text of the identifier ends and the associated data value starts. The end of the data value is determined by the separator.	27	UNSIGNED8	0 … 255	0	-
Delimiter in the identifier/separator algorithm	The separator terminates the data value that follows its identifier directly after the identifier length. After the separator, the next identifier starts.	28	UNSIGNED8	0 … 127	0	-

Table 10.36: Parameters for module 54

Parameter length

29 byte

Input data

None

Output data

None

Identifier string n (n = 1 … 5)

The identifier string defines both the identifier list for the segmentation and the passthrough filter for the subsequent filtering.

The string may contain wildcards. That is, an arbitrary number of '?' are permitted as placeholders for an arbitrary character at exactly that position.

Also permitted are '*' as placeholders for a character sequence of arbitrary length, and an 'x' if the character at the respective position is to be deleted. There are a total of 5 identifier strings.

An identifier with less than 5 characters must be null terminated. However, if the identifier string consists of exactly 5 characters, it does not have to be null terminated.

10.10.4 Module 55 – String handling parameters

Description

This module is used to configure placeholder characters for the barcode segmentation, filtering, termination, and reference code processing.

Parameters

Parameter	Description	Addr.	Data type	Value range	Default	Unit
Wildcard character	This parameter is similar to the "don't care character" parameter. The difference between this and the "don't care character" is that all subsequent characters, and not only one character at a certain position, are disregarded until a character pattern is found in the string that follows the wildcard character pattern. This character has the same behaviour as the wildcard character for the DIR command in the command line interpreter under Windows.	0	UNSIGNED8	32 … 127	'*'	-
Don't care character	Placeholder character. Characters at the position of the placeholder character are ignored in a comparison. This permits certain areas to be masked.	1	UNSIGNED8	32 … 127	?	-
Delete character	Delete character for barcode and identifier filtering (characters at the position of the delete character are deleted in a comparison. This permits certain areas to be deleted).	2	UNSIGNED8	32 … 127	'x'	-

Table 10.37: Parameters for module 55

Parameter length

3 byte

Input data

None

Output data

None

10.11 Device Functions

10.11.1 Module 60 – Device status

Description

The module contains the display of the device status as well as control bits for triggering a reset or putting the device into standby mode.

Parameters

None

Input data

Input data	Description	Addr.	Data type	Value range	Init value	Unit
Device status	This byte represents the device status	0	UNSIGNED8	0: Device is ready 1: Initialisation 10: Standby 11: Service 12: Diagnosis 13: Parameter enabled 0x80: Error 0x81: Warning	0	-

Table 10.38: Input data for module 60

Input data length

1 byte

Output data

Output data	Description	Addr.	Data type	Value range	Init value	Unit
System reset	The control bit triggers a system reset[1)] if the level changes from 0 to 1	0.6	Bit	0: Run 0 -> 1: Reset	0	-
Standby	Activates the standby function	0.7	Bit	0: Standby off 1: Standby on	0	-

Table 10.39: Output data for module 60

1) Analogous to command H, activation of this bit triggers a restart of all electronics, incl. a restart of the PROFIBUS stack.

Output data length

1 byte

Notice!

When resetting the data (see Module 10 – Activations), the input data of this module is not deleted.

10.11.2 Module 61 – Laser control

Description

This module defines the switch-on and switch-off position of the laser.

Parameters

Parameter	Description	Addr.	Data type	Value range	Default	Unit
Laser start position	This parameter defines the switch-on position of the laser in 1/10° increments within the visible range of the laser. The centre of the reading field corresponds to the 0° position.	0 … 1	UNSIGNED16	-450 … +450	-450	1/10°
Laser stop position	This parameter defines the switch-off position of the laser in 1/10° increments within the visible range of the laser.	2 … 3	UNSIGNED16	-450 … +450	+450	1/10°

Table 10.40: Parameters for module 61

Parameter length

4 byte

Input data

None

Output data

None

10.11.3 Module 62 – Display

Description

Set in this module are general parameters and parameters related to operation and the display.

Parameters

Parameter	Description	Addr.	Data type	Value range	Default	Unit
Language selection	Language selection for the display A language which was selected via the display is overwritten by this parameter.	0.0 … 0.2	Bit	1: English 2: German 3: Italian 4: French 5: Spanish	0	-
Display illumination	Off after 10min., or permanently on.	0.3	Bit	0: Off after 10min. 1: Permanently on	0	-
Display contrast	Contrast setting of the display. The contrast changes under extreme ambient temperature and can be adjusted with this parameter.	0.4 … 0.5	Bit	0: Light 1: Medium 2: Strong	1	-
Password protection	Password protection on/off.	0.7	Bit	0: OFF 1: ON	0	-
Password	Password specification. Password is only active if password protection is on.	1 … 2	UNSIGNED16	0000 … 9999	0000	-

Table 10.41: Parameters for module 62

Parameter length

3 byte

Input data

None

Output data

None

Notice!

This module overwrites the local display settings. Following activation of this module, the language selection, the setting for password protection and the specified password set in this module take effect.

10.11.4 Module 63 – Alignment

Description

The module defines input and output data for the alignment mode of the BCL 504*i*. The alignment mode is used for easy alignment of the BCL 504*i* with the barcode. Using the transmitted decoding quality as a percentage, the optimum alignment can be easily selected. This module should not be used in connection with module 81 (AutoReflAct) as this may cause malfunctions.

Parameters

None

Input data

Input data	Description	Addr.	Data type	Value range	Init value	Unit
Decoding quality	Transmits the current decoding quality of the barcode located in the scanning beam	0	Byte	0 … 100	0	Percent-age

Table 10.42: Input data for module 63

Input data length

1 byte

Output data

Output data	Description	Addr.	Data type	Value range	Init value	Unit
Alignment mode	Signal activates and deactivates the alignment mode for optimum alignment of the BCL 504*i* with the barcode	0.0	Bit	0 -> 1: On 1 -> 0: Off	0	-

Table 10.43: Output data for module 63

Output data length

1 byte

10.11.5 Module 64 – Oscillating mirror

Description

Module for supporting the oscillating mirror.

Parameters

Parameter	Description	Addr.	Data type	Value range	Default	Unit
Oscillation mode	This parameter defines the mode in which the oscillating mirror operates.	0	UNSIGNED8	0: Single oscillation 1: Double oscillation 2: Continuous oscillation 3: Continuous oscillation, oscillating mirror moves to the start position at the end of the reading gate.	2	-
Start position	Start position (opening angle) relative to the zero position of the swivel range.	1 … 2	SIGNED16	-200 … +200	200	1/10°
Stop position	Stop position (opening angle) relative to the zero position of the swivel range.	3 … 4	SIGNED16	-200 … +200	-200	1/10°
Oscillation frequency	Common value for forward and backward motion	5	UNSIGNED8	15 … 116	48	°/s

Table 10.44: Parameters for module 64

Parameter length

6 byte

Input data

None

Output data

None

10.11.6 Module 65 – Deflection mirrors

Description

Module for supporting the deflection mirror.

Parameters

Parameter	Description	Addr.	Data type	Value range	Default	Unit
Deflection angle	Lateral beam exit in degrees relative to the zero position	0 … 1	SIGNED16	-100 … +100	0	1/10°

Table 10.45: Parameters for module 65

Parameter length

2 byte

Input data

None

Output data

None

10.12 Switching inputs/ outputs SWIO 1..4

These modules define the mode of operation of the 4 digital switching inputs and outputs (I/Os). They are separated into individual modules for configuring the individual I/Os and a shared module for signalling the status and controlling.

10.12.1 Parameters for operating as an output

Start-up delay

With this setting, the output pulse can be delayed by the specified time (in ms).

Switch-on time

Defines the switch-on time period for the switching input. Any activated switch-off function then no longer has any function.

A value of 0 causes the output to be set statically; this means that the selected input function(s) activate the output, and the selected switch-off function(s) deactivate it again.

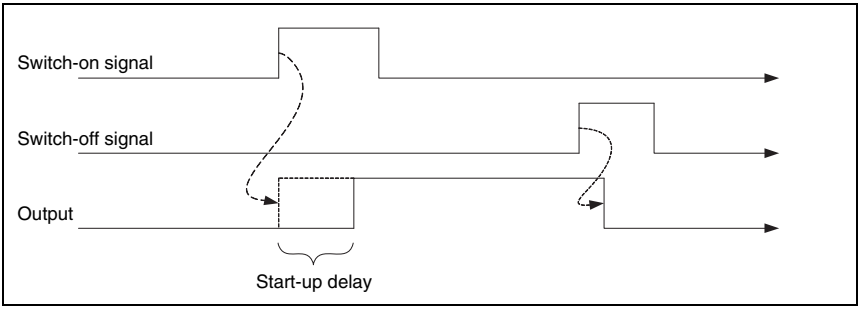

Figure 10.2: Example 1: Start-up delay > 0 and switch-on time = 0

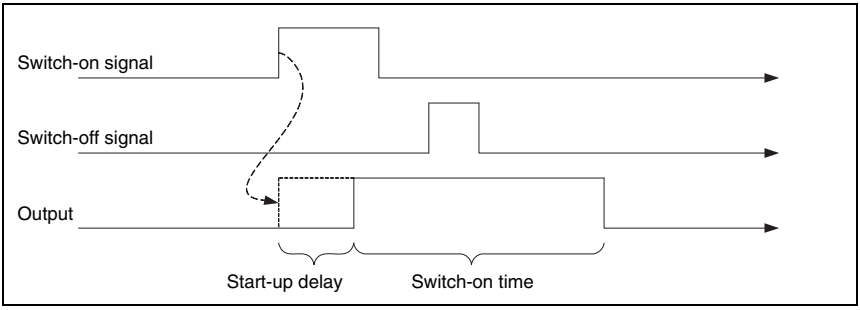

Figure 10.3: Example 2: Start-up delay > 0 and switch-on time > 0

In example 2, the activation duration of the output is only dependent on the selected switch-on time; the switch-off signal has no effect.

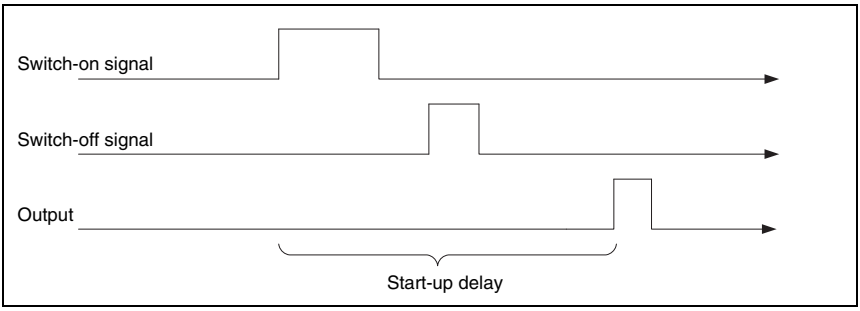

Figure 10.4: Example 3: Start-up delay >0 Switch-off signal prior to lapsing of the start-up delay

If the output is again deactivated via the switch-off signal before the start-up delay lapses, only a brief pulse appears at the output following the start-up delay.

Comparison functionality

If, for example, the switching output is to be activated after four invalid read results, the **comparative value** is set to **4** and the **switch-on function** is configured to "**invalid read result**".

The **comparison mode** parameter can be used to define whether the switching output is activated only once in the case that the event counter and comparative value fulfil the "**parity**" condition, or if it is activated multiple times, on each successive event after the "**parity**" condition is met.

The event counter can always be reset with the I/O data in the **I/O status and control** module; furthermore, the **reset mode** parameter enables automatic resetting upon reaching the **comparative value**. Automatic resetting upon reaching the **comparative value** always results in the switching output being switched once independent of the **comparison mode** parameter.

The standard switch-off function at **reading gate start** is rather unsuited for this module since it causes the event counter to be reset on each reading gate start. Suitable as switch-off function for this example is the **valid read result** function; otherwise, all switch-off functions are deactivated.

10.12.2 Parameters for operating as an input

Debounce time

Parameter for setting the software debounce time for the switching input. The definition of a debounce time extends the signal transition time accordingly.

If the value of this parameter = 0, no debouncing takes place; otherwise, the configured value represents the duration in milliseconds for which the input signal must be present and stable.

Start-up delay td_on

If the value of this parameter = 0, no start-up delay occurs for the activation of the input function; otherwise, the configured value represents the time in milliseconds by which the input signal is delayed.

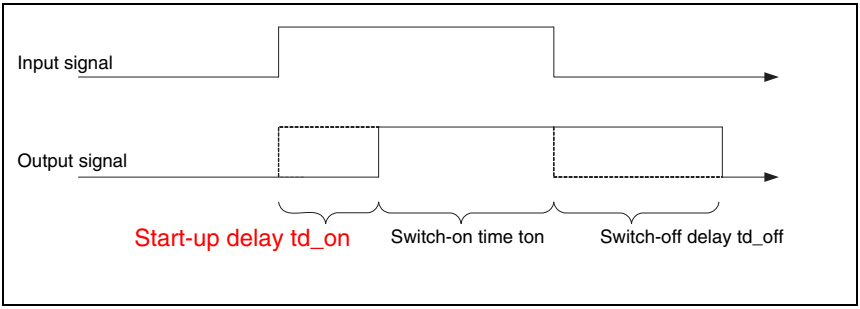

Figure 10.5: Start-up delay in input mode

Switch-on time ton

This parameter specifies the min. activation duration for the selected input function in ms.

The actual activation duration is calculated from the switch-on time as well as the switch-off delay.

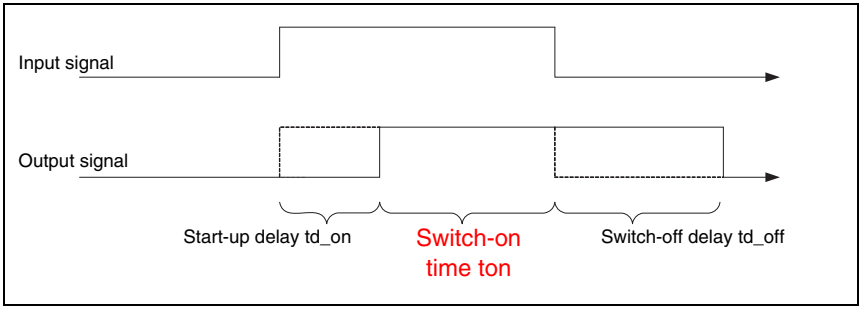

Figure 10.6: Switch-on time in input mode

Switch-off delay td_off

This parameter specifies the duration of the switch-off delay in ms.

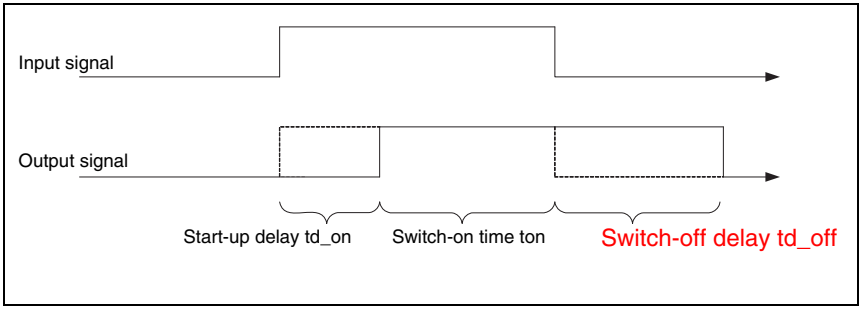

Figure 10.7: Switch-off delay in input mode

10.12.3 Switch-on and switch-off functions for operation as an output

The following options are available for switch-on and switch-off functions in the "output" operating mode:

Name	Value	Comments
No function	0	No functionality
Reading gate start	1	
Reading gate end	2	
Positive reference code comparison 1	3	
Negative reference code comparison 1	4	
Valid read result	5	
Invalid read result	6	
Device ready	7	The device is in a ready state
Device not ready	8	The device is not yet ready (motor and laser are being activated)
Data transmission active	9	
Data transmission not active	10	
AutoControl good quality	13	
AutoControl bad quality	14	
Reflector detected	15	
Reflector not detected	16	
External event, pos. edge	17	In the PROFIBUS case, the external event is generated with the aid of module 74 – "I/O status and control". See "Module 74 – SWIO status and control" on page 166.
External event, neg. edge	18	See above
Device active	19	Decoding is currently being performed.
Device in standby mode	20	Motor and laser inactive
No device error	21	No error was detected
Device error	22	Device is in an error state
Positive reference code comparison 2	23	
Negative reference code comparison 2	24	

Table 10.46: Switch-on/switch-off functions

10.12.4 Input functions for operation as an input

Name	Value	Comments
No function	0	No functionality
Activation of the reading gate	1	
Reading gate deactivation only	2	
Reading gate activation only	3	
Reference barcode teach-in	4	
Start/stop autoconfiguration mode	5	

Table 10.47: Input functions

10.12.5 Module 70 – Switching input/output SWIO1

Parameters

Parameter	Description	Addr.	Data type	Value range	Default	Unit
Function	This parameter defines whether I/O 1 functions as an input or as an output.	0.0	Bit	0: Input 1: Output	0	-
Mode of operation for configuration as an output						
DC bias level	The parameter defines the DC bias level of the switching output and, thus, simultaneously whether the output is low-active (0) or high-active (1).	0.1	Bit	0: LOW (0V) 1: HIGH (+Ub)	0	-
Reserved	Free	0.2 … 0.7				
Start-up delay	With this parameter, the output pulse may be delayed by a set time period.	1	UNSIGNED16	0 … 65535	0	ms
Switch-on time	The parameter defines the switch-on time period for the switching output. If the value is 0, the signal is static.	3	UNSIGNED16	0 … 1300	400	ms
Switch-on function 1	This parameter specifies an event which can set the switching output.	5	UNSIGNED8	cf. "Switch-on/ switch-off functions" on page 157	0	-
Switch-on function 2	This parameter specifies an event which can set the switching output. Switch-on function 1 and switch-on function 2 are OR linked.	6	UNSIGNED8	cf. "Switch-on/ switch-off functions" on page 157	0	-
Switch-off function 1	This parameter specifies an event which can reset the switching output.	7	UNSIGNED8	cf. "Switch-on/ switch-off functions" on page 157	0	-
Switch-off function 2	This parameter specifies an event which can reset the switching output. Switch-off function 1 and switch-off function 2 are OR linked.	8	UNSIGNED8	cf. "Switch-on/ switch-off functions" on page 157	0	-
Comparative value (Event Counter)	If the number of activation events of the selected switch-on function reaches this comparative value, the switching output is activated. A deactivation event of the selected switch-off function resets the counter.	9	UNSIGNED16	0..65535	0	-
Compare mode (Event Counter)	Specifies whether the switching output switches only on parity (once) or also in the event of greater or equal to (multiple times) after the comparative value is reached.	11	UNSIGNED8	0: SWOUT switches once 1: SWOUT switches several times	0	-

Table 10.48: Parameters for module 70 – Input/Output 1

Parameter	Description	Addr.	Data type	Value range	Default	Unit
Reset mode (Event Counter)	Specifies whether the counter (Event Counter) is reset only by the reset bit and the selected switch-off function, or if the counter should be automatically reset after the comparative value is reached.	12	UNSIGNED8	0: Reset bit and switch-off funct. 1: Comparative value reached	0	-
Mode of operation for configuration as an input						
Inversion	The parameter defines the logic of the incident signal. In case of an inversion, an external HIGH level is interpreted internally as a LOW level.	13.1	Bit	0: Normal 1: Inverted	0	-
Reserved	Free	13.2 … 13.7				
Debounce time	The parameter defines a debounce time which is implemented in software.	14	UNSIGNED16	0 … 1000	5	ms
Start-up delay	The parameter influences the timing during switch-on.	16	UNSIGNED16	0 … 65535	0	ms
Minimum switch-on time	The parameter defines a minimum time period before the signal is reset.	18	UNSIGNED16	0 … 65535	0	ms
Switch-off delay	The parameter defines a time delay for the signal during switch-off.	20	UNSIGNED16	0 … 65535	0	ms
Input function	The parameter specifies the function which is to be activated or deactivated by a change of state in the signal.	22	UNSIGNED8	cf. "Input functions" on page 157	1	-

Table 10.48: Parameters for module 70 – Input/Output 1

Parameter length

23 byte

Input data

None

Output data

None

Remark

The DC bias level also defines whether the output is low-active (**0**) or high-active (**1**).

Switching on an I/O configured as an output means switching to the active state; switching off, on the other hand, results in switching to the inactive or idle state.

10.12.6 Module 71 – Switching input/output SWIO2

Parameters

Parameter	Description	Addr.	Data type	Value range	Default	Unit
Function	This parameter defines whether I/O 2 functions as an input or as an output.	0.0	Bit	0: Input 1: Output	1	-
Mode of operation for configuration as an output						
DC bias level	The parameter defines the DC bias level of the switching output and, thus, simultaneously whether the output is low-active (0) or high-active (1).	0.1	Bit	0: LOW (0V) 1: HIGH (+Ub)	0	-
Reserved	Free	0.2 … 0.7				
Start-up delay	With this parameter, the output pulse may be delayed by a set time period.	1	UNSIGNED16	0 … 65535	0	ms
Switch-on time	The parameter defines the switch-on time period for the switching output. If the value is 0, the signal is static.	3	UNSIGNED16	0 … 1300	400	ms
Switch-on function 1	This parameter specifies an event which can set the switching output.	5	UNSIGNED8	cf. "Switch-on/ switch-off functions" on page 157	5	-
Switch-on function 2	This parameter specifies an event which can set the switching output. Switch-on function 1 and switch-on function 2 are OR linked.	6	UNSIGNED8	cf. "Switch-on/ switch-off functions" on page 157	0	-
Switch-off function 1	This parameter specifies an event which can reset the switching output.	7	UNSIGNED8	cf. "Switch-on/ switch-off functions" on page 157	1	-
Switch-off function 2	This parameter specifies an event which can reset the switching output. Switch-off function 1 and switch-off function 2 are OR linked.	8	UNSIGNED8	cf. "Switch-on/ switch-off functions" on page 157	0	-
Comparative value (Event Counter)	If the number of activation events of the selected switch-on function reaches this comparative value, the switching output is activated. A deactivation event of the selected switch-off function resets the counter.	9	UNSIGNED16	0..65535	0	-
Compare mode (Event Counter)	Specifies whether the switching output switches only on parity (once) or also in the event of greater or equal to (multiple times) after the comparative value is reached.	11	UNSIGNED8	0: SWOUT switches once 1: SWOUT switches several times	0	-

Table 10.49: Parameters for module 71 – Input/Output 2

Parameter	Description	Addr.	Data type	Value range	Default	Unit
Reset mode (Event Counter)	Specifies whether the counter (Event Counter) is reset only by the reset bit and the selected switch-off function, or if the counter should be automatically reset after the comparative value is reached.	12	UNSIGNED8	0: Reset bit and switch-off funct. 1: Comparative value reached	0	-
Mode of operation for configuration as an input						
Inversion	The parameter defines the logic of the incident signal. In case of an inversion, an external HIGH level is interpreted internally as a LOW level.	13.1	Bit	0: Normal 1: Inverted	0	-
Reserved	Free	13.2 … 13.7				
Debounce time	The parameter defines a debounce time which is implemented in software.	14	UNSIGNED16	0 … 1000	5	ms
Start-up delay	The parameter influences the timing during switch-on.	16	UNSIGNED16	0 … 65535	0	ms
Minimum switch-on time	The parameter defines a minimum time period before the signal is reset.	18	UNSIGNED16	0 … 65535	0	ms
Switch-off delay	The parameter defines a time delay for the signal during switch-off.	20	UNSIGNED16	0 … 65535	0	ms
Input function	The parameter specifies the function which is to be activated or deactivated by a change of state in the signal.	22	UNSIGNED8	cf. "Input functions" on page 157	0	-

Table 10.49: Parameters for module 71 – Input/Output 2

Parameter length

23 byte

Input data

None

Output data

None

Remark

The DC bias level also defines whether the output is low-active (**0**) or high-active (**1**).

Switching on an I/O configured as an output means switching to the active state; switching off, on the other hand, results in switching to the inactive or idle state.

10.12.7 Module 72 – Switching input/output SWIO3

Parameters

Parameter	Description	Addr.	Data type	Value range	Default	Unit
Function	This parameter defines whether I/O 3 functions as an input or as an output.	0.0	Bit	0: Input 1: Output	0	-
Mode of operation for configuration as an output						
DC bias level	The parameter defines the DC bias level of the switching output and, thus, simultaneously whether the output is low-active (0) or high-active (1).	0.1	Bit	0: LOW (0V) 1: HIGH (+Ub)	0	-
Reserved	Free	0.2 … 0.7				
Start-up delay	With this parameter, the output pulse may be delayed by a set time period.	1	UNSIGNED16	0 … 65535	0	ms
Switch-on time	The parameter defines the switch-on time period for the switching output. If the value is 0, the signal is static.	3	UNSIGNED16	0 … 1300	400	ms
Switch-on function 1	This parameter specifies an event which can set the switching output.	5	UNSIGNED8	cf. "Switch-on/ switch-off functions" on page 157	0	-
Switch-on function 2	This parameter specifies an event which can set the switching output. Switch-on function 1 and switch-on function 2 are OR linked.	6	UNSIGNED8	cf. "Switch-on/ switch-off functions" on page 157	0	-
Switch-off function 1	This parameter specifies an event which can reset the switching output.	7	UNSIGNED8	cf. "Switch-on/ switch-off functions" on page 157	0	-
Switch-off function 2	This parameter specifies an event which can reset the switching output. Switch-off function 1 and switch-off function 2 are OR linked.	8	UNSIGNED8	cf. "Switch-on/ switch-off functions" on page 157	0	-
Comparative value (Event Counter)	If the number of activation events of the selected switch-on function reaches this comparative value, the switching output is activated. A deactivation event of the selected switch-off function resets the counter.	9	UNSIGNED16	0..65535	0	-
Compare mode (Event Counter)	Specifies whether the switching output switches only on parity (once) or also in the event of greater or equal to (multiple times) after the comparative value is reached.	11	UNSIGNED8	0: SWOUT switches once 1: SWOUT switches several times	0	-

Table 10.50: Parameters for module 72 – Input/Output 3

Parameter	Description	Addr.	Data type	Value range	Default	Unit
Reset mode (Event Counter)	Specifies whether the counter (Event Counter) is reset only by the reset bit and the selected switch-off function, or if the counter should be automatically reset after the comparative value is reached.	12	UNSIGNED8	0: Reset bit and switch-off funct. 1: Comparative value reached	0	-
Mode of operation for configuration as an input						
Inversion	The parameter defines the logic of the incident signal. In case of an inversion, an external HIGH level is interpreted internally as a LOW level.	13.1	Bit	0: Normal 1: Inverted	0	-
Reserved	Free	13.2 … 13.7				
Debounce time	The parameter defines a debounce time which is implemented in software.	14	UNSIGNED16	0 … 1000	5	ms
Start-up delay	The parameter influences the timing during switch-on.	16	UNSIGNED16	0 … 65535	0	ms
Minimum switch-on time	The parameter defines a minimum time period before the signal is reset.	18	UNSIGNED16	0 … 65535	0	ms
Switch-off delay	The parameter defines a time delay for the signal during switch-off.	20	UNSIGNED16	0 … 65535	0	ms
Input function	The parameter specifies the function which is to be activated or deactivated by a change of state in the signal.	22	UNSIGNED8	cf. "Input functions" on page 157	2	-

Table 10.50: Parameters for module 72 – Input/Output 3

Parameter length

23 byte

Input data

None

Output data

None

Remark

The DC bias level also defines whether the output is low-active (**0**) or high-active (**1**).

Switching on an I/O configured as an output means switching to the active state; switching off, on the other hand, results in switching to the inactive or idle state.

10.12.8 Module 73 – Switching input/output SWIO4

Parameters

Parameter	Description	Addr.	Data type	Value range	Default	Unit
Function	This parameter defines whether I/O 4 functions as an input or as an output.	0.0	Bit	0: Input 1: Output	1	-
Mode of operation for configuration as an output						
DC bias level	The parameter defines the DC bias level of the switching output and, thus, simultaneously whether the output is low-active (0) or high-active (1).	0.1	Bit	0: LOW (0V) 1: HIGH (+Ub)	0	-
Reserved	Free	0.2 … 0.7				
Start-up delay	With this parameter, the output pulse may be delayed by a set time period.	1	UNSIGNED16	0 … 65535	0	ms
Switch-on time	The parameter defines the switch-on time period for the switching output. If the value is 0, the signal is static.	3	UNSIGNED16	0 … 1300	400	ms
Switch-on function 1	This parameter specifies an event which can set the switching output.	5	UNSIGNED8	cf. "Switch-on/ switch-off functions" on page 157	6	-
Switch-on function 2	This parameter specifies an event which can set the switching output. Switch-on function 1 and switch-on function 2 are OR linked.	6	UNSIGNED8	cf. "Switch-on/ switch-off functions" on page 157	0	-
Switch-off function 1	This parameter specifies an event which can reset the switching output.	7	UNSIGNED8	cf. "Switch-on/ switch-off functions" on page 157	1	-
Switch-off function 2	This parameter specifies an event which can reset the switching output. Switch-off function 1 and switch-off function 2 are OR linked.	8	UNSIGNED8	cf. "Switch-on/ switch-off functions" on page 157	0	-
Comparative value (Event Counter)	If the number of activation events of the selected switch-on function reaches this comparative value, the switching output is activated. A deactivation event of the selected switch-off function resets the counter.	9	UNSIGNED16	0..65535	0	-
Compare mode (Event Counter)	Specifies whether the switching output switches only on parity (once) or also in the event of greater or equal to (multiple times) after the comparative value is reached.	11	UNSIGNED8	0: SWOUT switches once 1: SWOUT switches several times	0	-

Table 10.51: Parameters for module 73 – Input/Output 4

Parameter	Description	Addr.	Data type	Value range	Default	Unit
Reset mode (Event Counter)	Specifies whether the counter (Event Counter) is reset only by the reset bit and the selected switch-off function, or if the counter should be automatically reset after the comparative value is reached.	12	UNSIGNED8	0: Reset bit and switch-off funct. 1: Comparative value reached	0	-
Mode of operation for configuration as an input						
Inversion	The parameter defines the logic of the incident signal. In case of an inversion, an external HIGH level is interpreted internally as a LOW level.	13.1	Bit	0: Normal 1: Inverted	0	-
Reserved	Free	13.2 … 13.7				
Debounce time	The parameter defines a debounce time which is implemented in software.	14	UNSIGNED16	0 … 1000	5	ms
Start-up delay	The parameter influences the timing during switch-on.	16	UNSIGNED16	0 … 65535	0	ms
Minimum switch-on time	The parameter defines a minimum time period before the signal is reset.	18	UNSIGNED16	0 … 65535	0	ms
Switch-off delay	The parameter defines a time delay for the signal during switch-off.	20	UNSIGNED16	0 … 65535	0	ms
Input function	The parameter specifies the function which is to be activated or deactivated by a change of state in the signal.	22	UNSIGNED8	cf. "Input functions" on page 157	0	-

Table 10.51: Parameters for module 73 – Input/Output 4

Parameter length

23 byte

Input data

None

Output data

None

Remark:

The DC bias level also defines whether the output is low-active (**0**) or high-active (**1**).

Switching on an I/O configured as an output means switching to the active state; switching off, on the other hand, results in switching to the inactive or idle state.

10.12.9 Module 74 – SWIO status and control

Description

Module for handling switching input and switching output signals.

Parameters

None

Input data

Input data	Description	Addr.	Data type	Value range	Init value	Unit
State 1	Signal state of switching input or output 1	0.0	Bit	0,1	0	-
State 2	Signal state of switching input or output 2	0.1	Bit	0,1	0	-
State 3	Signal state of switching input or output 3	0.2	Bit	0,1	0	-
State 4	Signal state of switching input or output 4	0.3	Bit	0,1	0	-
Comparison state switching output 1 (Event Counter)	Indicates whether the event counter has exceeded the set comparative value. The bit is reset to the init. value by resetting the event counter.	1.0	Bit	0: Not exceeded 1: Exceeded	0	-
Switching output 1 Comparison state toggle bit (Event Counter)	If "SWOUT switches several times" was configured as comparison mode, this bit is toggled each time the event counter is exceeded. The bit is reset to the init. value by resetting the event counter.	1.1	Bit	0 → 1: Event counter exceeded 1 → 0: Event counter exceeded again	0	-
Comparison state switching output 2 (Event Counter)	Indicates whether the event counter has exceeded the set comparative value. The bit is reset to the init. value by resetting the event counter.	1.2	Bit	0: Not exceeded 1: Exceeded	0	-
Switching output 2 Comparison state toggle bit (Event Counter)	If "SWOUT switches several times" was configured as comparison mode, this bit is toggled each time the event counter is exceeded. The bit is reset to the init. value by resetting the event counter.	1.3	Bit	0 → 1: Event counter exceeded 1 → 0: Event counter exceeded again	0	-
Comparison state switching output 3 (Event Counter)	Indicates whether the event counter has exceeded the set comparative value. The bit is reset to the init. value by resetting the event counter.	1.4	Bit	0: Not exceeded 1: Exceeded	0	-

Table 10.52: Input data for module 74 Input/output status and control

Input data	Description	Addr.	Data type	Value range	Init value	Unit
Switching output 3 Comparison state toggle bit (Event Counter)	If "SWOUT switches several times" was configured as comparison mode, this bit is toggled each time the event counter is exceeded. The bit is reset to the init. value by resetting the event counter.	1.5	Bit	0 → 1: Event counter exceeded 1 → 0: Event counter exceeded again	0	-
Comparison state switching output 4 (Event Counter)	Indicates whether the event counter has exceeded the set comparative value. The bit is reset to the init. value by resetting the event counter.	1.6	Bit	0: Not exceeded 1: Exceeded	0	-
Switching output 4 Comparison state toggle bit (Event Counter)	If "SWOUT switches several times" was configured as comparison mode, this bit is toggled each time the event counter is exceeded. The bit is reset to the init. value by resetting the event counter.	1.7	Bit	0 → 1: Event counter exceeded 1 → 0: Event counter exceeded again	0	-

Table 10.52: Input data for module 74 Input/output status and control

Input data length

2 bytes

Output data

Output data	Description	Addr.	Data type	Value range	Init value	Unit
Switching output 1	Sets the state of switching output 1	0.0	Bit	0: Switching output 0 1: Switching output 1	0	-
Switching output 2	Sets the state of switching output 2	0.1	Bit	0: Switching output 0 1: Switching output 1	0	-
Switching output 3	Sets the state of switching output 3	0.2	Bit	0: Switching output 0 1: Switching output 1	0	-
Switching output 4	Sets the state of switching output 4	0.3	Bit	0: Switching output 0 1: Switching output 1	0	-
Reset Event Counter Switching output 1	Sets the event counter of the activation function [AF] for switching output 1 back to zero.	0.4	Bit	0 -> 1: Perform reset 1 -> 0: No function	0	-
Reset Event Counter Switching output 2	Sets the event counter of the activation function [AF] for switching output 2 back to zero.	0.5	Bit	0 -> 1: Perform reset 1 -> 0: No function	0	-

Table 10.53: Output data for module 74 Input/output status and control

Output data	Description	Addr.	Data type	Value range	Init value	Unit
Reset Event Counter Switching output 3	Sets the event counter of the activation function [AF] for switching output 3 back to zero.	0.6	Bit	0 -> 1: Perform reset 1 -> 0: No function	0	-
Reset Event Counter Switching output 4	Sets the event counter of the activation function [AF] for switching output 4 back to zero.	0.7	Bit	0 -> 1: Perform reset 1 -> 0: No function	0	-
	Reserved	1	Byte			

Table 10.53: Output data for module 74 Input/output status and control

Output data length

2 bytes

10.13 Data output

10.13.1 Module 80 – Sorting

Description

Module to support the sorting of the output data.

Parameters

Parameter	Description	Addr.	Data type	Value range	Default	Unit
Sort criterion 1	Specifies the criterion according to which sorting takes place.	0.0 … 0.6	BitArea	0: No sorting 1: Sorting according to scan number 2: Sorting according to position in the scanning beam 3: Sorting according to the oscillating mirror position 4: Sorting according to the decoding quality 5: Sorting according to the barcode length 6: Sorting according to the code type number 7: Sorting according to the decoding direction 8: Sorting according to the barcode content 9: Sorting according to time 10: Sorting according to scanning duration 11: Sorting according to the code list (in which the enabled barcodes are listed) 12: Sorting according to the identifier list	0	-
Sort direction 1	Specifies the sorting direction.	0.7	Bit	0: In ascending order 1: In descending order	0	-
Sort criterion 2	Specifies the criterion according to which sorting takes place.	1.0 … 1.6	BitArea	See sorting criterion 1	0	-
Sort direction 2	Specifies the sorting direction.	1.7	Bit	See sorting direction 1	0	-
Sort criterion 3	Specifies the criterion according to which sorting takes place.	2.0 … 2.6	BitArea	See sorting criterion 1	0	-
Sort direction 3	Specifies the sorting direction.	2.7	Bit	See sorting direction 1	0	-

Table 10.54: Parameters for module 80

Parameter length

3 byte

Input data

None

Output data

None

10.14 Reference code comparison

The following modules can be used to support reference code comparison.

The reference code function compares the currently decoded read results with one or more stored comparison patterns. The function is split into two comparison units which can be configured independently of each other.

10.14.1 Module 81 – Reference code comparator 1

Description

The module defines the mode of operation of reference code comparator 1.

Parameters

Parameter	Description	Addr.	Data type	Value range	Default	Unit
Output function after reference barcode comparison	This parameter specifies the associated output linkage after a reference barcode comparison.	0	UNSIGNED8	0: No function 1: Comparison function 1 2: Comparison function 2 3: Comparison function 1 AND 2 4: Comparison function 1 OR 2	1	-
Linking logic for reference code output signal	This parameter specifies the linking logic for the reference code output signal.	1	UNSIGNED8	0: Length and type and ASCII 1: Length and (type or ASCII) 2: (Length or type) and ASCII 3: Length or type or ASCII	0	-
Output for reference code comparison	This parameter specifies whether a barcode length comparison should be carried out.	2	UNSIGNED8	0: Length ignored 1: Comparison o.k. if length not identical 2: Comparison o.k. if length identical.	2	-
Barcode type comparison	This parameter specifies whether a barcode type comparison should be carried out.	3	UNSIGNED8	0: Type ignored 1: Comparison o.k. if types not identical 2: Comparison o.k. if types identical.	2	-
Reference code ASCII comparison	This parameter specifies how the ASCII comparison should be carried out.	4	UNSIGNED8	0: No comparison 1: Barcode not identical to RC 2: Barcode identical to RC 3: Barcode greater than RC 4: Barcode greater than or equal to RC 5: Barcode less than RC 6: Barcode less than or equal to RC 7: RC1 less than or equal to barcode less than or equal to RC2 8: Barcode less than RC1 or barcode greater than RC2	2	-

Table 10.55: Parameters for module 81 – Reference code comparison

Parameter	Description	Addr.	Data type	Value range	Default	Unit
Reference code comparison mode	This parameter determines how and which reference barcodes (RC) are to be used for the barcode comparison.	5	UNSIGNED8	0: Only the first RC is used for the comparison. 1: Only the second RC is used for the comparison. 2: RC 1 and 2 are used for the comparison. Both conditions for RC 1 and 2 must be satisfied for a positive comparison. 3: RC 1 and 2 are used for the comparison. One of the two conditions for reference barcodes 1 and 2 must be satisfied.	0	-
Barcode comparison mode	This parameter specifies which decoded barcodes are to be used for the reference barcode comparison.	6	UNSIGNED8	0: Only the first barcode is used for the comparison. 1: Only the second barcode is used for the comparison. 2: All barcodes are used for the comparison. All comparisons must be successful. 3: All barcodes are used for the comparison. One comparison must be successful.	3	-
Reference code completeness comparison	If this parameter is set, the basic condition for a positive reference code comparison is that all mandatory barcodes that are to be read within a reading gate were actually read. If this condition is not satisfied, no positive reference code comparison is achieved.	7.0	Bit	0: Completeness comparison switched off. 1: Completeness comparison switched on.	0	-

Table 10.55: Parameters for module 81 – Reference code comparison

Parameter length

8 byte

Input data

None

Output data

None

10.14.2 Module 82 – Reference code comparator 2

Description

The module defines the mode of operation of reference code comparator 2.

Parameters

Parameter	Description	Addr.	Data type	Value range	Default	Unit
Output function after reference barcode comparison	This parameter specifies the associated output linkage after a reference barcode comparison.	0	UNSIGNED8	0: No function 1: Comparison function 1 2: Comparison function 2 3: Comparison function 1 AND 2 4: Comparison function 1 OR 2	1	-
Linking logic for reference code output signal	This parameter specifies the linking logic for the reference code output signal.	1	UNSIGNED8	0: Length and type and ASCII 1: Length and (type or ASCII) 2: (Length or type) and ASCII 3: Length or type or ASCII	0	-
Output for reference code comparison	This parameter specifies whether a barcode length comparison should be carried out.	2	UNSIGNED8	0: Length ignored 1: Comparison o.k. if length not identical 2: Comparison o.k. if length identical.	2	-
Barcode type comparison	This parameter specifies whether a barcode type comparison should be carried out.	3	UNSIGNED8	0: Type ignored 1: Comparison o.k. if types not identical 2: Comparison o.k. if types identical.	2	-
Reference code ASCII comparison	This parameter specifies how the ASCII comparison should be carried out.	4	UNSIGNED8	0: No comparison 1: Barcode not identical to RC 2: Barcode identical to RC 3: Barcode greater than RC 4: Barcode greater than or equal to RC 5: Barcode less than RC 6: Barcode less than or equal to RC 7: RC1 less than or equal to barcode less than or equal to RC2 8: Barcode less than RC1 or barcode greater than RC2	2	-
Reference code comparison mode	This parameter determines how and which reference barcodes (RC) are to be used for the barcode comparison.	5	UNSIGNED8	0: Only the first RC is used for the comparison. 1: Only the second RC is used for the comparison. 2: RC 1 and 2 are used for the comparison. Both conditions for RC 1 and 2 must be satisfied for a positive comparison. 3: RC 1 and 2 are used for the comparison. One of the two conditions for reference barcodes 1 and 2 must be satisfied.	0	-

Table 10.56: Parameters for module 82 – Reference code comparison

Parameter	Description	Addr.	Data type	Value range	Default	Unit
Barcode comparison mode	This parameter specifies which decoded barcodes are to be used for the reference barcode comparison.	6	UNSIGNED8	0: Only the first barcode is used for the comparison. 1: Only the second barcode is used for the comparison. 2: All barcodes are used for the comparison. All comparisons must be successful. 3: All barcodes are used for the comparison. One comparison must be successful.	3	-
Reference code completeness comparison	If this parameter is set, the basic condition for a positive reference code comparison is that all mandatory barcodes that are to be read within a reading gate were actually read. If this condition is not satisfied, no positive reference code comparison is achieved.	7.0	Bit	0: Completeness comparison switched off. 1: Completeness comparison switched on.	0	-

Table 10.56: Parameters for module 82 – Reference code comparison

Parameter length

8 byte

Input data

None

Output data

None

10.14.3 Module 83 – Reference code comparison pattern 1

Description

This module can be used to define the 1st comparison pattern

Parameters

Parameter	Description	Addr.	Data type	Value range	Default	Unit
Code type comparison pattern 1	Specifies the type of the reference barcode.	0	UNSIGNED8	0: 0: No code 1: 2/5 Interleaved 2: Code39 3: Code32 6: UPC, UPCE 7: EAN8, EAN13 8: Code128 10: EAN Addendum 11: Codabar 12: Code93 13: RSS-14 14: RSS Limited 15: RSS Expanded	0	-
Comparison pattern 1	Parameter string describing the content of the reference barcode. Note: You can also use the two placeholder characters that are stored in the "Wildcard character" and "Don't care character" parameters. If the string is empty, no comparison takes place. If the most recently stored character is the wildcard character, the comparison is only carried out up to the character before this wildcard character. In this way it is possible to switch off a comparison according to barcode length.	1	STRING 30 characters null terminated	1 … 30 bytes of ASCII characters	\00	-

Table 10.57: Parameter module 83 – Reference code comparison pattern

Parameter length

31 byte

Input data

None

Output data

None

Notice!

The defined comparison pattern affects both reference code comparators (Module 81 – Reference code comparator 1 and Module 82 – Reference code comparator 2).

10.14.4 Module 84 – Reference code comparison pattern 2

Description

This module can be used to define the 2nd comparison pattern

Parameters

Parameter	Description	Addr.	Data type	Value range	Default	Unit
Code type comparison pattern 2	Specifies the type of the reference barcode.	0	UNSIGNED8	0: 0: No code 1: 2/5 Interleaved 2: Code39 3: Code32 6: UPC, UPCE 7: EAN8, EAN13 8: Code128 10: EAN Addendum 11: Codabar 12: Code93 13: RSS-14 14: RSS Limited 15: RSS Expanded	0	-
Comparison pattern 2	Parameter string describing the content of the reference barcode. Note: You can also use the two placeholder characters that are stored in the "Wildcard character" and "Don't care character" parameters. If the string is empty, no comparison takes place. If the most recently stored character is the wildcard character, the comparison is only carried out up to the character before this wildcard character. In this way it is possible to switch off a comparison according to barcode length.	1	STRING 30 characters null terminated	1 … 30 bytes of ASCII characters	\00	-

Table 10.58: Parameter module 84 – Reference code comparison pattern

Parameter length

31 byte

Input data

None

Output data

None

Notice!

The defined comparison pattern affects both reference code comparators (Module 81 – Reference code comparator 1 and Module 82 – Reference code comparator 2).

10.15 Special Functions

10.15.1 Module 90 – Status and control

This module supplies various BCL 504*i* status information to the PROFIBUS master. Various functions of the BCL 504*i* can be controlled via the master's output data.

Parameters

None

Input data

Input data	Description	Addr.	Data type	Value range	Init value	Unit
Reserved	Free	0.0	Bit		0	-
AutoRefl state	Signal state of the AutoRefl module	0.1	Bit	0: Reflector is recognised 1: Reflector is hidden	1	-
Auto Control result	Indicates whether the result of the AutoControl function was a good or bad reading.	0.2	Bit	0: Quality good 1: Quality bad	0	-
Reserved	Free	0.3	Bit		0	-
RefCode comparison state 1	The signal indicates whether the decoded barcode corresponds to the reference code with regard to the comparison criteria as defined in the comparison function 1. If it matches, the value 1 is output.	0.4 … 0.5	Bit	0: Not equal 1: Equal 2: Unknown	2	-
RefCode comparison state 2	The signal indicates whether the decoded barcode corresponds to the reference code with regard to the comparison criteria as defined in the comparison function 2. If it matches, the value 1 is output.	0.6 … 0.7	Bit	0: Not equal 1: Equal 2: Unknown	2	-

Table 10.59: Input data for module 90 – Status and control

Input data length

1 byte

Output data

None

10.15.2 Module 91 – AutoReflAct (automatic reflector activation)

Description

The module defines the mode of operation of the laser scanner for controlling the reading gate.

The AutoReflAct function uses the scanning beam to simulate a photoelectric sensor and thus permits an activation without additional sensory mechanism. This is achieved by directing the scanner with reduced scanning beam towards a reflector mounted behind the conveyor path. As long as the scanner is targeted at the reflector, the reading gate remains closed. If, however, the reflector is blocked by an object such as a container with a barcode label, the scanner activates the read procedure, and the label on the container is read. When the path from the scanner to the reflector has cleared, the read procedure has completed and the scanning beam is reduced and again directed onto the reflector. The reading gate is closed.

Parameters

Parameter	Description	Addr.	Data type	Value range	Default	Unit
Mode	This parameter activates the function of the laser scanner. If "Autom. reading gate control" is set as the parameter value, the BCL activates the reading gate automatically if the reflector is obscured.	0	UNSIGNED8	0: **Normal** AutoreflAct switched off. 1: **Auto** AutoreflAct activated. Autom. reading gate control. 2: **Manual** AutoreflAct activated. No reading gate control, signalling only.	0	-
Debouncing	The parameter defines the debounce time in scans for the reflector detection With a motor speed of 1000, 1 scan corresponds to a debounce time of 1 ms.	1	UNSIGNED8	1 … 16	5	-

Table 10.60: Parameters for module 91 – AutoreflAct

Parameter length

2 byte

Input data

None

Output data

None

10.15.3 Module 92 – AutoControl

Description

The module defines the mode of operation of the function AutoControl. The function monitors the quality of the decoded barcodes and compares these with a limit value. If the limit is reached, a status is set.

Parameters

Parameter	Description	Addr.	Data type	Value range	Default	Unit
AutoControl enable	This parameter can be used to activate or deactivate the AutoControl function.	0	UNSIGNED8	0: deactivated 1: activated	0	-
Limit for reading quality	The parameter defines a threshold for the reading quality.	1	UNSIGNED8	0 … 100	50	%
Sensitivity	With this parameter the sensitivity towards changes in the reading ability can be specified. The higher the value, the less influence a change of reading ability has.	2	UNSIGNED8	0 … 255	0	-

Table 10.61: Parameters for module 92 – AutoControl

Parameter length

3 byte

Input data

Input data	Description	Addr.	Data type	Value range	Init value	Unit
Scan quality	Represents the current average value of the scan quality (at the time of the last reading gate).	0	UNSIGNED8	0 … 100	0	-

Table 10.62: Input data for module 92 – AutoControl

Input data length

1 byte

Output data

None

Notice:

By means of the AutoControl function, it is possible to detect barcodes of decreasing quality and thus take appropriate measures before the label is no longer legible. With activated AutoControl function, note that the "Processing end at end of label" parameter in the CRT module should be set to allow for a better assessment of the barcode quality (see also "Module 7 – Code fragment technology" on page 118).

10.16 Example configuration: Indirect activation via the PLC

10.16.1 Task

- Reading of a 15-digit Code 128
- Indirect activation of the BCL 504*i* via the PLC

Code sample

Code 128, 15 digits

10.16.2 Procedure

Hardware, connections

The following connections must have been established:

- Voltage supply (PWR)
- PROFIBUS In
- PROFIBUS termination

Required modules

Include the following modules in your project:

- Module 10 – Activations
- Module 24 – Decoding result 16 bytes

Parameter settings

No parameters need to be set separately. The standard parameter set provides all required functions.

Flow diagrams

Successful reading:

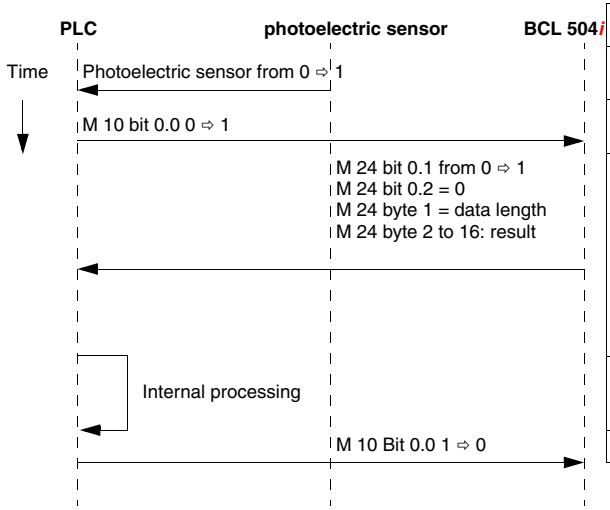

Description
The photoelectric sensor is interrupted.
Activation bit 0.0 is set to 1. This activates the reading gate.
The barcodes that have been read are processed and transmitted by module 24: Reading concluded bit 0.1 = 1 and barcode not decoded bit 0.2 = 0. The data length is entered in byte 1, in this case 15 decimal. The decoding result is transmitted in the following 15 bytes.
Internal data processing
Activation bit 0.0 is reset to 0

Unsuccessful reading:

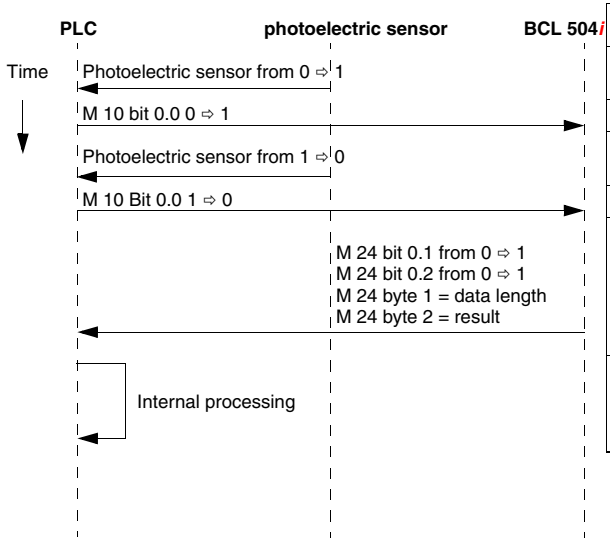

Description
The photoelectric sensor is interrupted.
Activation bit 0.0 is reset to 1.
The reading gate elapses without read result
Activation bit 0.0 is reset to 0
The module decoding state signals: Reading concluded bit 0.1 = 1 and barcode **not** decoded bit 0.2 = 1. The data length is entered in byte 1. The result hex 3F ("?" = no read) is transmitted.
Internal processing of the data and signalling of the non-reading

10.17 Sample configuration: Direct activation via the switching input

10.17.1 Task

- Reading of a 12-digit barcode in 2/5 Interleaved format
- Direct activation of the BCL 504*i* via a photoelectric sensor

Code sample

Code 2/5 Interleaved 12 digits with check digit

561234765436

10.17.2 Procedure

Hardware, connections

The following connections must have been established:

- Voltage supply (PWR)
- PROFIBUS In
- PROFIBUS termination
- Photoelectric sensor at SWIO1

Required modules

Include the following modules in your project:

- Module 23 – Decoding result 12 bytes

Parameter settings of the "common parameters"

Byte	Description	Init value	Change value to:
1	Code type 1	0	01: 2/5 Interleaved
4	Digits 3	0	12

Table 10.63: Device parameters for example configuration 2

Flow diagrams

Successful reading:

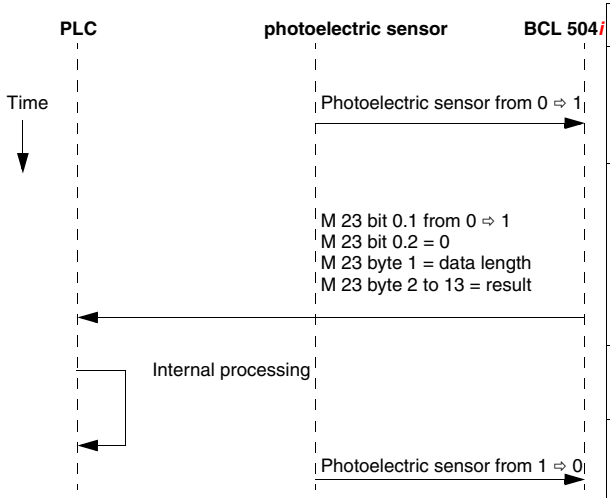

Description
The photoelectric sensor is interrupted. The signal of the switching output of the photoelectric sensor is present at the switching input of the BCL 504*i* and activates the scanner.
The barcodes that have been read are processed and transmitted by module 23: Reading concluded bit 0.1 = 1 and barcode not decoded bit 0.2 = 0. The data length is entered in byte 1, in this case 12 decimal. The decoding result is transmitted in the following 12 bytes.
Internal data processing
The beam of the photoelectric sensor is cleared and sets the switching input of the BCL 504*i* to 0. This deactivates the scanner.

Unsuccessful reading:

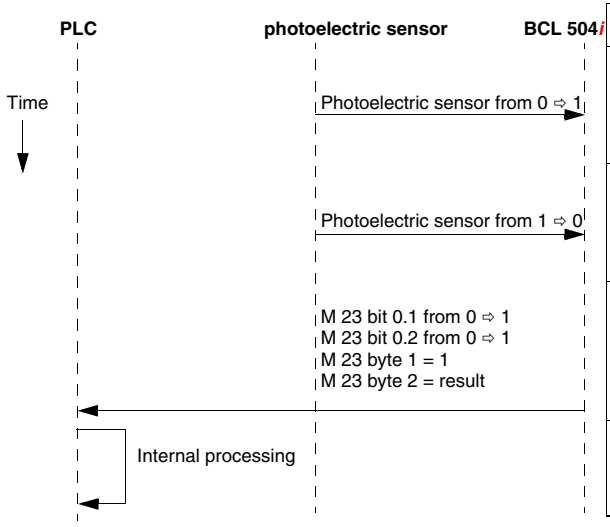

Description
The photoelectric sensor is interrupted. The signal of the switching output of the photoelectric sensor is present at the switching input of the BCL 504*i* and activates the scanner.
The beam of the photoelectric sensor is cleared before a read result is present. The photoelectric sensor sets the switching input of the BCL 504*i* to 0 and deactivates the scanner.
The module decoding state signals: Reading concluded bit 0.1 = 1 and barcode **not** decoded bit 0.2 = 1. The data length is entered in byte 1. The result hex 3F ("?" = no read) is transmitted.
Internal data processing

11 Diagnostics and troubleshooting

11.1 General causes of errors

Error	Possible error cause	Measures
Status LED **PWR**		
Off	• No supply voltage connected to the device • Hardware error	❑ Check supply voltage ❑ Send device to customer service
Red, flashing	• Warning	❑ Query diagnostic data and carry out the resulting measures
Red, continuous light	• Error: no function possible	❑ Internal device error, send in device
Orange, continuous light	• Device in service mode	❑ Reset service mode with webConfig tool or display
Status LED **BUS**		
Off	• No supply voltage connected to the device • Device not yet recognised by the PROFIBUS	❑ Check supply voltage ❑ Send device to customer service
Red, flashing	• Error on the PROFIBUS	❑ Can be corrected by resetting
Red, continuous light	• Error on the PROFIBUS	❑ Cannot be corrected by resetting ❑ Send device to customer service

Table 11.1: General causes of errors

11.2 Interface errors

Error	Possible error cause	Measures
No communication via USB service interface	• Incorrect connection cable • Connected BCL 504*i* is not detected	❑ Check connection cable ❑ Install USB driver
No communication via PROFIBUS. **BUS** status LED continuous red light	• Incorrect wiring. • Wrong termination • Incorrect PROFIBUS address set • Incorrect configuration	❑ Check wiring ❑ Check termination ❑ Check PROFIBUS address ❑ Check configuration of the device in the configuration tool
Sporadic errors at the PROFIBUS	• Incorrect wiring. • Wrong termination • Effects due to EMC. • Overall network expansion exceeded.	❑ Check wiring ❑ Check termination ❑ Check shielding ❑ Check grounding concept and connection to FE ❑ Avoid EMC coupling caused by power cables laid parallel to device lines ❑ Check max. network expansion as a function of the set baud rate

Table 11.2: Interface error

Notice!

*Please use **chapter 11 as a master copy** should servicing be required.*
Cross the items in the "Measures" column which you have already examined, fill out the following address field and fax the pages together with your service contract to the fax number listed below.

Customer data (please complete)

Device type:	
Company:	
Contact partner / department:	
Phone (direct):	
Fax:	
Street / No:	
ZIP code/City:	
Country:	

Leuze Service fax number:

+49 7021 573 - 199

12 Type overview and accessories

12.1 Type key

BCL 500i OM100H

Heating option	H =	With heating
Beam exit	0	Lateral
	2	Front
Optics	N	High Density (near)
	M	Medium Density (medium distance)
	F	Low Density (remote)
	L	Ultra Low Density (very large distances)
Scanning principle	S	Line scanner (single line)
	O	Oscillating-mirror scanner
Interface	*i* =	Integrated fieldbus technology
	0	RS 232/RS 422/RS 485 (multiNet Master)
	1	RS 485 (multiNet Slave)
	4	PROFIBUS DP
	8	ETHERNET / PROFINET
	BCL	Barcode reader

12.2 Type overview BCL 504*i*

BCL 504i series

(PROFIBUS DP with 1x RS 485 interface at 2x M12 B-coded connectors)

Type designation	Description	Part No.
High Density Optics (m = 0.25 … 0.5mm)		
BCL 504*i* SN 100	Line scanner with deflection mirror	501 05489
BCL 504*i* SN 102	Line scanner, beam exit at the front	501 05490
BCL 504*i* ON 100	Oscillating-mirror scanner	501 05491
BCL 504*i* SN 100 H	Line scanner with deflection mirror, with heating	501 05492
BCL 504*i* SN 102 H	Line scanner, beam exit at the front, with heating	501 05493
BCL 504*i* ON 100 H	Oscillating-mirror scanner with heating	501 05494
Medium Density Optics (m = 0.35 … 1.0mm)		
BCL 504*i* SM 100	Line scanner with deflection mirror	501 05495
BCL 504*i* SM 102	Line scanner, beam exit at the front	501 05496
BCL 504*i* OM 100	Oscillating-mirror scanner	501 05497
BCL 504*i* SM 100 H	Line scanner with deflection mirror, with heating	501 05498
BCL 504*i* SM 102 H	Line scanner, beam exit at the front, with heating	501 05499
BCL 504*i* OM 100 H	Oscillating-mirror scanner with heating	501 05500
Low Density Optics (m = 0.5 … 1.0mm)		
BCL 504*i* SF 100	Line scanner with deflection mirror	501 05501
BCL 504*i* SF 102	Line scanner, beam exit at the front	501 05502
BCL 504*i* OF 100	Oscillating-mirror scanner	501 05503
BCL 504*i* SF 100 H	Line scanner with deflection mirror, with heating	501 05504
BCL 504*i* SF 102 H	Line scanner, beam exit at the front, with heating	501 05505
BCL 504*i* OF 100 H	Oscillating-mirror scanner with heating	501 05506
Ultra Low Density Optics (m = 0.7 … 1.0mm)		
BCL 504*i* SL 102	Line scanner, beam exit at the front	501 09896
BCL 504*i* OL 100	Oscillating-mirror scanner	501 09897
BCL 504*i* SL 102 H	Line scanner, beam exit at the front, with heating	501 09899
BCL 504*i* OL 100 H	Oscillating-mirror scanner with heating	501 09900

Table 12.1: Type overview BCL 504*i*

12.3 Accessory terminating resistor

Type designation	Description	Part No.
TS 02-4-SO M12	M12 connector with integrated terminating resistor for BUS OUT	50038539

Table 12.2: Terminating resistor for the BCL 504*i*

12.4 Accessory connectors

Type designation	Description	Part No.
KD 02-5-BA	M12 socket for HOST or BUS IN	50038538
KD 02-5-SA	M12 connector for BUS OUT	50038537
KD 095-5A	M12 socket for voltage supply	50020501
KS 095-4A	M12 connector for SW IN/OUT	50040155
KDS BUS OUT M12-T-5P	M12 T-connector for BUS OUT	50109834

Table 12.3: Connectors for the BCL 504*i*

12.5 Accessory USB cable

Type designation	Description	Part No.
KB USB-Service	USB service cable	50107726

Table 12.4: Cables for the BCL 504*i*

12.6 Accessory external parameter memory

Type designation	Description	Part No.
USB Memory Set	External USB parameter memory	50108833

Table 12.5: External parameter memory for the BCL 504*i*

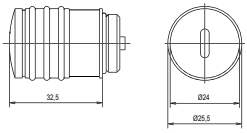

12.7 Accessory mounting device

Type designation	Description	Part No.
BT 56	Mounting device for rod	50027375

Table 12.6: Mounting devices for the BCL 504*i*

12.8 Accessory ready-made cables for voltage supply

12.8.1 Contact assignment of PWR connection cable

PWR connection cable (5-pin socket, A-coded)			
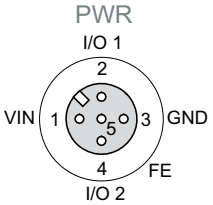 **M12 socket (A-coded)**	**Pin**	**Name**	**Core colour**
	1	VIN	**brown**
	2	I/O 1	**white**
	3	GND	**blue**
	4	I/O 2	**black**
	5	FE	**grey**
	Thread	FE	**bare**

12.8.2 Specifications of the cables for voltage supply

Operating temperature range	in rest state:	-30°C … +70°C
	in motion:	-5°C … +70°C
Material	sheathing: PVC	
Bending radius	> 50mm	

12.8.3 Order codes of the cables for voltage supply

Type designation	Description	Part No.
K-D M12A-5P-5m-PVC	M12 socket for PWR, axial connector, open line end, cable length 5m	50104557
K-D M12A-5P-10m-PVC	M12 socket for PWR, axial connector, open line end, cable length 10m	50104559

Table 12.7: PWR cables for the BCL 504*i*

12.9 Accessory ready-made cables for bus connection

12.9.1 General information

- Cable **KB PB…** for connecting to the BUS IN/BUS OUT M12 connector
- Standard cables available in lengths from 2 … 30m
- Special cables on request.

12.9.2 Contact assignment of KB PB… connection cable for PROFIBUS/ multiNet plus

PROFIBUS/multiNet plus connection cable (5-pin socket/connector, B-coded)

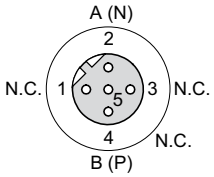

M12 socket (B-coded)

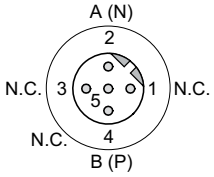

M12 connector (B-coded)

Pin	Name	Core colour
1	N.C.	–
2	A (N)	**green**
3	N.C.	–
4	B (P)	**red**
5	N.C.	–
Thread	FE	**bare**

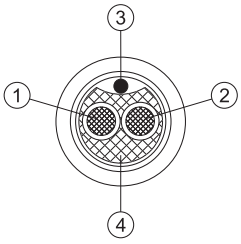

1 Conductor with insulation **red**
2 Conductor with insulation **green**
3 Drain wire
4 Fibrous fleece

Figure 12.8:Cable structure of PROFIBUS/multiNet plus connection cable

12.9.3 Technical data of interface connection cable

Operating temperature range in rest state: -40°C … +80°C
in motion: -5°C … +80°C

Material The lines fulfil the PROFIBUS requirements and are free of halogens, silicone, and PVC

Bending radius > 80mm, suitable for drag chains

12.9.4 Order codes for interface connection cables

Type designation	Description	Part No.
M12 socket for BUS IN, axial connector, open line end		
KB PB-2000-BA	Cable length 2m	50104181
KB PB-5000-BA	Cable length 5m	50104180
KB PB-10000-BA	Cable length 10m	50104179
KB PB-15000-BA	Cable length 15m	50104178
KB PB-20000-BA	Cable length 20m	50104177
KB PB-25000-BA	Cable length 25m	50104176
KB PB-30000-BA	Cable length 30m	50104175
M12 connector for BUS OUT, axial connector, open line end		
KB PB-2000-SA	Cable length 2m	50104188
KB PB-5000-SA	Cable length 5m	50104187
KB PB-10000-SA	Cable length 10m	50104186
KB PB-15000-SA	Cable length 15m	50104185
KB PB-20000-SA	Cable length 20m	50104184
KB PB-25000-SA	Cable length 25m	50104183
KB PB-30000-SA	Cable length 30m	50104182
M12 connector + M12 socket for PROFIBUS/multiNet plus, axial connector		
KB PB-1000-SBA	Cable length 1m	50104096
KB PB-2000-SBA	Cable length 2m	50104097
KB PB-5000-SBA	Cable length 5m	50104098
KB PB-10000-SBA	Cable length 10m	50104099
KB PB-15000-SBA	Cable length 15m	50104100
KB PB-20000-SBA	Cable length 20m	50104101
KB PB-25000-SBA	Cable length 25m	50104174
KB PB-30000-SBA	Cable length 30m	50104173

Table 12.9: Bus connection cables for the BCL 504*i*

13 Maintenance

13.1 General maintenance information

Usually, the barcode reader BCL 504*i* does not require any maintenance by the operator.

Cleaning

In the event of dust build-up, clean the BCL 504*i* with a soft cloth; use a cleaning agent (commercially available glass cleaner) if necessary.

Notice!

Do not use aggressive cleaning agents such as thinner or acetone for cleaning the device. Use of improper cleaning agents can damage the optical window.

13.2 Repairs, servicing

Repairs to the device must only be carried out by the manufacturer.

↳ *Contact your Leuze distributor or service organisation should repairs be required. The addresses can be found on the inside of the cover and on the back.*

Notice!

When sending devices to Leuze electronic for repair, please provide an accurate description of the error.

13.3 Disassembling, packing, disposing

Repacking

For later re-use, the device is to be packed so that it is protected.

Notice!

Electrical scrap is a special waste product! Observe the locally applicable regulations regarding disposal of the product.

14 Appendix

14.1 Declaration of conformity

Leuze electronic

EG-Konformitätserklärung
EC-Declaration of Conformity

Der Hersteller:
The Manufacturer:

Leuze electronic GmbH + Co. KG
In der Braike 1
73277 Owen / Teck
Deutschland

erklärt, unter alleiniger Verantwortung, dass die folgenden Produkte:
declares under its sole responsibility, that the following products:

Gerätebeschreibung:
Description of Product:

BCL 50x* Barcodeleser / *Barcode Reader*

folgenden Richtlinien und Normen entsprechen.
are in conformity with the following standards and directives.

Angewandte EG-Richtlinie(n):
Applied EC-Directive(s):

89/336/EWG EMV-Richtlinie / *EMC Directive*

Angewandte harmonisierte Normen:
Applied harmonized standards:

EN 61000-6-2:2005 EMV Fachgrundnormen Störfestigkeit Industrie
Immunity standard for industrial environments

EN 61000-6-4:2001 EMV Fachgrundnorm Störaussendung Industrie
Emission standard for industrial environments

Sonstige angewandte Normen:
Other applied standards:

EN 60825-1:1994 + A1:2002 + A2:2001 Sicherheit von Lasereinrichtungen
Safety of laser products

Leuze electronic GmbH + Co. KG
Postfach 11 11
In der Braike 1
73277 Owen / Teck
Deutschland

Owen, den 14.6.07

Michael Heyne (Geschäftsführer)
(*Managing Director*)

Leuze electronic GmbH + Co. KG
In der Braike 1
D-73277 Owen / Teck
Telefon (0 70 21) 57-0
Telefax (0 70 21) 57-39 50
http://www.leuze.de
info@leuze.de

Die Gesellschaft ist eine Kommanditgesellschaft mit Sitz in Owen
Registergericht Stuttgart, HRA 230712
Persönlich haftende Gesellschafterin ist die
Leuze electronic Geschäftsführungs-GmbH mit Sitz in Owen
Registergericht Stuttgart, HRB 230706
Geschäftsführer: Michael Heyne (Sprecher), Dr. Harald Grubel

BW -Bank Nürtingen 8665210 (BLZ 600 501 01)
Volksbank Kirchheim-Nürtingen 310 800 005 (BLZ 612 901 20)
Kreissparkasse Esslingen-Nürtingen 10 399 220 (BLZ 611 500 20)

Steuer-Nr. 69026 / 10630
USt.-IdNr. DE 145912531
Zollnummer 2504232

14.2 ASCII character set

ASCII	Dec.	Hex.	Oct.	Designation	Meaning
NUL	0	00	0	NULL	Null
SOH	1	01	1	START OF HEADING	Start of heading
STX	2	02	2	START OF TEXT	Start of text characters
ETX	3	03	3	END OF TEXT	Last character of text
EOT	4	04	4	END OF TRANSMISS.	End of transmission
ENQ	5	05	5	ENQUIRY	Request for data trans.
ACK	6	06	6	ACKNOWLEDGE	Positive acknowledgement
BEL	7	07	7	BELL	Bell signal
BS	8	08	10	BACKSPACE	Backspace
HT	9	09	11	HORIZ. TABULATOR	Horizontal tabulator
LF	10	0A	12	LINE FEED	Line feed
VT	11	0B	13	VERT. TABULATOR	Vertical tabulator
FF	12	0C	14	FORM FEED	Form feed
CR	13	0D	15	CARRIAGE RETURN	Carriage return
SO	14	0E	16	SHIFT OUT	Shift out
SI	15	0F	17	SHIFT IN	Shift in
DLE	16	10	20	DATA LINK ESCAPE	Data link escape
DC1	17	11	21	DEVICE CONTROL 1	Device control character 1
DC2	18	12	22	DEVICE CONTROL 2	Device control character 2
DC3	19	13	23	DEVICE CONTROL 3	Device control character 3
DC4	20	14	24	DEVICE CONTROL 4	Device control character 4
NAK	21	15	25	NEG. ACKNOWLEDGE	Negative acknowledge
SYN	22	16	26	SYNCRONOUS IDLE	Synchronization
ETB	23	17	27	EOF TRANSM. BLOCK	End of data transmission block
CAN	24	18	30	CANCEL	Invalid
EM	25	19	31	END OF MEDIUM	End of medium
SUB	26	1A	32	SUBSTITUTE	Substitution
ESC	27	1B	33	ESCAPE	Escape
FS	28	1C	34	FILE SEPARATOR	File separator
GS	29	1D	35	GROUP SEPARATOR	Group separator
RS	30	1E	36	RECORD SEPARATOR	Record separator
US	31	1F	37	UNIT SEPARATOR	Unit separator
SP	32	20	40	SPACE	Space
!	33	21	41	EXCLAMATION POINT	Exclamation point

ASCII	Dec.	Hex.	Oct.	Designation	Meaning
"	34	22	42	QUOTATION MARK	Quotation mark
#	35	23	43	NUMBER SIGN	Number sign
$	36	24	44	DOLLAR SIGN	Dollar sign
%	37	25	45	PERCENT SIGN	Percent sign
&	38	26	46	AMPERSAND	Ampersand
’	39	27	47	APOSTROPHE	Apostrophe
(	40	28	50	OPEN. PARENTHESIS	Open parenthesis
)	41	29	51	CLOS. PARENTHESIS	Closed parenthesis
*	42	2A	52	ASTERISK	Asterisk
+	43	2B	53	PLUS	Plus sign
,	44	2C	54	COMMA	Comma
-	45	2D	55	HYPHEN (MINUS)	Hyphen
.	46	2E	56	PERIOD (DECIMAL)	Period (decimal)
/	47	2F	57	SLANT	Slant
0	48	30	60	0	Number
1	49	31	61	1	Number
2	50	32	62	2	Number
3	51	33	63	3	Number
4	52	34	64	4	Number
5	53	35	65	5	Number
6	54	36	66	6	Number
7	55	37	67	7	Number
8	56	38	70	8	Number
9	57	39	71	9	Number
:	58	3A	72	COLON	Colon
;	59	3B	73	SEMI-COLON	Semi-colon
<	60	3C	74	LESS THAN	Less than
=	61	3D	75	EQUALS	Equals
>	62	3E	76	GREATER THAN	Greater than
?	63	3F	77	QUESTION MARK	Question mark
@	64	40	100	COMMERCIAL AT	Commercial AT
A	65	41	101	A	Capital letter
B	66	42	102	B	Capital letter
C	67	43	103	C	Capital letter
D	68	44	104	D	Capital letter

ASCII	Dec.	Hex.	Oct.	Designation	Meaning
E	69	45	105	E	Capital letter
F	70	46	106	F	Capital letter
G	71	47	107	G	Capital letter
H	72	48	110	H	Capital letter
I	73	49	111	I	Capital letter
J	74	4A	112	J	Capital letter
K	75	4B	113	K	Capital letter
L	76	4C	114	L	Capital letter
M	77	4D	115	M	Capital letter
N	78	4E	116	N	Capital letter
O	79	4F	117	O	Capital letter
P	80	50	120	P	Capital letter
Q	81	51	121	Q	Capital letter
R	82	52	122	R	Capital letter
S	83	53	123	S	Capital letter
T	84	54	124	T	Capital letter
U	85	55	125	U	Capital letter
V	86	56	126	V	Capital letter
W	87	57	127	W	Capital letter
X	88	58	130	X	Capital letter
Y	89	59	131	Y	Capital letter
Z	90	5A	132	Z	Capital letter
[	91	5B	133	OPENING BRACKET	Opening bracket
\	92	5C	134	REVERSE SLANT	Reverse slant
]	93	5D	135	CLOSING BRACKET	Closing bracket
^	94	5E	136	CIRCUMFLEX	Circumflex
_	95	5F	137	UNDERSCORE	Underscore
‘	96	60	140	GRAVE ACCENT	Grave accent
a	97	61	141	a	Lower case letter
b	98	62	142	b	Lower case letter
c	99	63	143	c	Lower case letter
d	100	64	144	d	Lower case letter
e	101	65	145	e	Lower case letter
f	102	66	146	f	Lower case letter
g	103	67	147	g	Lower case letter

ASCII	Dec.	Hex.	Oct.	Designation	Meaning
h	104	68	150	h	Lower case letter
i	105	69	151	i	Lower case letter
j	106	6A	152	j	Lower case letter
k	107	6B	153	k	Lower case letter
l	108	6C	154	l	Lower case letter
m	109	6D	155	m	Lower case letter
n	110	6E	156	n	Lower case letter
o	111	6F	157	o	Lower case letter
p	112	70	160	p	Lower case letter
q	113	71	161	q	Lower case letter
r	114	72	162	r	Lower case letter
s	115	73	163	s	Lower case letter
t	116	74	164	t	Lower case letter
u	117	75	165	u	Lower case letter
v	118	76	166	v	Lower case letter
w	119	77	167	w	Lower case letter
x	120	78	170	x	Lower case letter
y	121	79	171	y	Lower case letter
z	122	7A	172	z	Lower case letter
{	123	7B	173	OPENING BRACE	Opening brace
|	124	7C	174	VERTICAL LINE	Vertical line
}	125	7D	175	CLOSING BRACE	Closing brace
~	126	7E	176	TILDE	Tilde
DEL	127	7F	177	DELETE (RUBOUT)	Delete

14.3 Barcode samples

14.3.1 Module 0.3

Code type 01: Interleaved 2 of 5

Modul 0,3

1122334455

Code type 02: Code 39

Modul 0,3

135AC

Code type 11: Codabar

Modul 0,3

A1213 14A

Code 128

Modul 0,3

abcde

Code type 08: EAN 128

Modul 0,3

leuze

Code type 06: UPC-A

SC 2

1 23456 78901 2

Code type 07: EAN 8

SC 3

3456 7890

Code type 10: EAN 13 Add-on

SC 0 S

77889

1 122334 455666

Figure 14.1:Barcode sample labels (module 0.3)

14.3.2 Module 0.5

Code type 01: Interleaved 2 of 5

Modul 0,5

6677889900

Code type 02: Code 39

Modul 0,5

246BD

Code type 11: Codabar

Modul 0,5

A1511617A

Code 128

Modul 0,5

fghij

Code type 08: EAN 128

Modul 0,5

LEUZE

Code type 06: UPC-A

SC 4

0 98765 43219 8

Code type 07: EAN 8

SC 6

9876 5430

Code type 10: EAN 13 Add-on

SC 2

0 099887 766550 44332

Figure 14.2:Barcode sample labels (module 0.5)

Level 1 ▲▼ : selection	Level 2 ▲▼ : selection ESC : back	Level 3 ▲▼ : selection ESC : back	Level 4 ▲▼ : selection ESC : back	Level 5 ▲▼ : selection ESC : back	Selection/configuration option ▲▼ : selection ↵ : activate ESC : back	Detailed informa-tion on
Device information						page 82
Barcode reading window						page 78
Parameter ↵	Parameter handling ↵	Parameter enabling			OFF/ON	page 83
		Parameters to default			All parameters are reset to their factory settings	
↵	Decoder table ↵	Max. no. of labels			Sets the number of labels to be decoded (0 … 64)	page 84
		Decoder 1-4 ↵	Symbology		Code type: no code / Code 2 of 5 Interleaved / Code 39 / Code 32 / Code UPC / Code EAN / Code 128 / EAN Addendum / Codabar / Code 93 / RSS 14 / RSS Limited / RSS Expanded	
			↵ Number of digits	↵ Interval mode	OFF / ON to specify a range of permitted numbers of digits	
				↵ Digits 1-5	0 … 64 characters	
			↵ Reading reliability		2 … 100	
			↵ Check digit method		Check digit method used for decoding	
			↵ Check digit transm.		Check digit transmission different from standard / as required by the standard	
↵	Digital SWIO ↵	Sw. input/output 1-4 ↵	↵ I/O mode		Input / Output / Passive	page 87
			↵ Switching input	↵ Inverted	OFF / ON	
				↵ Debounce time	0 … 1000 ms	
				↵ Start-up delay	0 … 65535 ms	
				↵ Pulse duration	0 … 65535 ms	
				↵ Switch-off delay	0 … 65535 ms	
				↵ Function	Function that is carried out after the switching input is activated	
			↵ Switching output	↵ Inverted	OFF / ON	
				↵ Signal delay	0 … 65535 ms	
				↵ Pulse duration	0 … 65535 ms	
				↵ Activ. function 1-4	Specifies the event that activates the switching output	
				↵ Deactiv. function 1-4	Specifies the event that deactivates the switching output	
↵	PROFIBUS	↵ PROFIBUS address			0 … 126	page 90
Language selection ↵					Deutsch / English / Español / Français / Italiano	page 90
Service ↵	Diagnostics				Number of readings, reading gates, reading rate / non-reading rate etc..	page 90
↵	Status messages				Exclusively for service purposes by Leuze electronic	
Actions ↵	Start decoding	Stop decoding			Perform a single reading	page 91
↵	Start alignment	Stop alignment			Alignment aid (alignment mode)	
↵	Start auto-setup	Stop auto-setup			Automatic detection of code type and number of digits	
↵	Start teach-in	Stop teach-in			Teach-in of a reference code	