Leuze electronic

the sensor people

S300

Safety Switches

EN 2011/09 - 607280
We reserve the right to
make technical changes

SAFE IMPLEMENTATION AND OPERATION

Original operating instructions

ПРОМЭЛЕКТРОНИКА / sales@prom-elec.com

© 2011
Leuze electronic GmbH + Co. KG
In der Braike 1
D-73277 Owen - Teck / Germany
Phone: +49 7021 573-0
Fax: +49 7021 573-199
http://www.leuze.com
info@leuze.de

1 About this document ... 5
1.1 Other applicable documents ... 5
1.2 Used symbols and signal words ... 6
2 Safety ... 7
2.1 Approved purpose and foreseeable improper operation ... 8
2.1.1 Proper use ... 8
2.1.2 Foreseeable misuse ... 10
2.2 Competent personnel ... 10
2.3 Responsibility for safety ... 10
2.4 Exemption of liability ... 11
3 Device description ... 12
4 Functions ... 17
5 Applications ... 18
6 Mounting ... 19
6.1 Adjusting the switching and approach direction ... 19
6.2 Mounting the Safety Position Switch ... 22
7 Electrical connection ... 26
7.1 Connecting the contact block ... 26
7.2 Contact block characteristics ... 27
8 Setting the device into service ... 29
9 Testing ... 30
9.1 To be performed prior to the initial start-up by competent personnel ... 30
9.2 To be performed periodically by competent personnel ... 30
9.3 To be performed daily by the operating personnel ... 31
10 Cleaning ... 32
11 Disposing ... 33
12 Service and support ... 34
13 Accessories ... 35
13.1 Accessory dimensional drawings ... 36
14 Technical data ... 37

15 EC Declaration of Conformity 41

1 About this document

1.1 Other applicable documents

The information on the S300 Safety Position Switch is divided into two documents. Document "S300 Application information" contains only the most important safety notices.

- For the safe implementation, testing and operation, download document S300 Safe implementation and operation from http://www.leuze.com/s300/ or request it from service.schuetzen@leuze.de or tel. +49 8141 5350-111.

Table 1.1: Documents on the S300 Safety Position Switch

Purpose and target group	Title	Source
Detailed information for all users	S300 Safe implementation and operation (this document)	On the Internet, download from: http://www.leuze.com/s300/
Basic information for technicians and operating company	S300 Application information	Print document part no. 607238 included in the delivery contents of the product

1.2 Used symbols and signal words

Table 1.2: Warning symbols and signal words

⚠	Symbol for dangers
NOTICE	Signal word for property damage Indicates dangers that may result in property damage if the measures for danger avoidance are not followed.
CAUTION	Signal word for minor injury Indicates dangers that may result in minor injury if the measures for danger avoidance are not followed.
WARNING	Signal word for severe injury Indicates dangers that may result in severe or fatal injury if the measures for danger avoidance are not followed.
DANGER	Signal word for life-threatening danger Indicates dangers that will result in severe or fatal injury if the measures for danger avoidance are not followed.

Table 1.3: Other symbols

ℹ	Symbol for tips Text passages with this symbol provide you with further information.
➪	Symbols for action steps Text passages with this symbol instruct you to perform actions.
xxx	Placeholder in the product description for all variants

2 Safety

Before using the Safety Position Switch, a risk evaluation must be performed according to valid standards (e.g. EN ISO 12100-1, EN ISO 13849-1, EN ISO 14121). For mounting, operating and testing, document S300 Safe implementation and operation, application information as well as all applicable national and international standards, regulations, rules and directives must be observed. Observe and print out relevant and supplied documents and distribute to the affected personnel.

The following standards apply for the risk evaluation at the protective device prior to using the Safety Position Switch:

- EN ISO 14121, Safety of machinery, risk evaluation
- EN ISO 12100-1, Safety of machinery
- EN ISO 13849-1, Safety-related parts of control systems

The realizable category of integration in control circuits acc. to EN ISO 13849-1 is dependent on the used contact block, wiring and mechanical conditions.

In particular, the following national and international legal regulations apply for the start-up, technical inspections and work with Safety Position Switch:

- Machinery directive 2006/42/EC
- Low voltage directive 2006/95/EC
- Use of work equipment directive 89/655 EEC
- Safety regulations
- Accident-prevention regulations and safety rules
- Ordinance on Industrial Safety and Health and Labor Protection Act
- Device Safety Act

For safety-related information you may also contact the local authorities (e.g., industrial inspectorate, employer's liability insurance association, labor inspectorate, labor protection and health authority).

2.1 Approved purpose and foreseeable improper operation

2.1.1 Proper use

- The Safety Switch must only be used after it has been selected in accordance with the respectively applicable instructions and relevant standards, rules and regulations regarding labor protection and safety at work, and after it has been installed on the machine, connected, commissioned, and checked by a **competent person**.
- When selecting the Safety Switch it must be ensured that its safety-related capability meets or exceeds the required performance level PL_r ascertained in the risk assessment.
- It must be in perfect condition and inspected regularly.
- The switching process must only be triggered by an actuator approved for this Safety Switch as well as a steering device in accordance with the specifications. Both must be connected to the fixed actuator holder or moveable guard in a permanent and tamperproof manner.

WARNING

A running machine can cause severe injuries!

↳ Make certain that, during all conversions, maintenance work and inspections, the system is securely shut down and protected against being restarted again.

S300 Safety Switches must be connected in such a way that a dangerous state can only be activated while the protective device is closed and so that the dangerous state stops upon opening of the protective device. It must not be used if the point of operation can be accessed during the lag time before the dangerous state has ended.

Connection conditions:

- the dangerous state can only be activated while the protective device is closed
- opening the protective device while the machine is running triggers a stop command and ends the dangerous state

Furthermore, the S300 Safety Position Switch must **not** be used under the following conditions:

- the actuation surface (e.g. of the machine or sliding gate) for the actuator is not form-fitting with positive actuation
- rapidly changing ambient temperature (leads to condensation)
- in the event of strong physical shocks
- in explosive or easily flammable atmospheres
- the mounting locations are not sufficiently stable
- the safety of multiple persons is dependent on the function of this Safety Switch (e.g. nuclear power plants, trains, aircraft, motor vehicles, incinerators, medical devices)

For machines with longer slowdowns, a Safety Locking Device must be used.

Handling the Safety Position Switch:

- Observe the permissible environmental conditions for storage and operation (see chapter 14).
- Immediately replace damaged Safety Position Switch according to these instructions.
- Use cable gland, insulation materials and connecting wires of the appropriate protection rating.
- Protect the Safety Position Switch from penetrating foreign bodies (e.g. shavings, sand and blasting agent).
- Before performing painting work, cover the actuation head, actuator and name plate.
- Immediately clean any contamination from the Safety Position Switch that impacts function according to these instructions.
- Make no structural changes to the Safety Position Switch and/or actuator.
- The switching direction may only be changed following an adequate risk evaluation and according to the dangerous direction of movement.
- The Safety Switch must be exchanged after a maximum of 20 years.

2.1.2 Foreseeable misuse

Any use other than that defined under the "approved purpose" or which goes beyond that use of the Safety Switch is considered improper use!

E.g. - using without non-detachably mounted actuator or start-up device

- looping into the safety circuit parts that are not relevant to safety
- using the switch as a limit stop

2.2 Competent personnel

Prerequisites for competent personnel:

- suitable technical training
- knows the rules and regulations for labor protection, safety at work and safety technology and can assess the safety of the machine
- knows the instructions for the Safety Position Switch and the machine
- was instructed by the responsible individuals on the mounting and operation of the machine and of the Safety Position Switch

2.3 Responsibility for safety

Manufacturer and operating company must ensure that the machine and implemented Safety Position Switch function properly and that all affected persons are adequately informed and trained.

The type and content of all imparted information must not lead to unsafe actions by users.

The manufacturer of the machine is responsible for:

- safe machine construction
- safe implementation of the Safety Position Switch
- imparting all relevant information to the operating company
- adhering to all regulations and directives for the safe starting-up of the machine

The operating company is responsible for:

- instructing the operating personnel
- maintaining the safe operation of the machine
- adhering to all regulations and directives for labor protection and safety at work
- regular testing by competent personnel

2.4 Exemption of liability

Leuze electronic GmbH + Co. KG is not liable in the following cases:

- Safety Position Switch is not used as intended
- safety notices are not adhered to
- mounting and electrical connection are not properly performed
- reasonably foreseeable misuse is not taken into account

3 Device description

The Safety Position Switch of the S300 series is an electro-mechanical switching device in a housing made of metal or self-extinguishing, highly viscous plastic; the device satisfies protection rating IP 67.

Models with different actuators, contact sets and connection options are available. The 300 series can therefore cover a variety of mechanical and electrical applications.

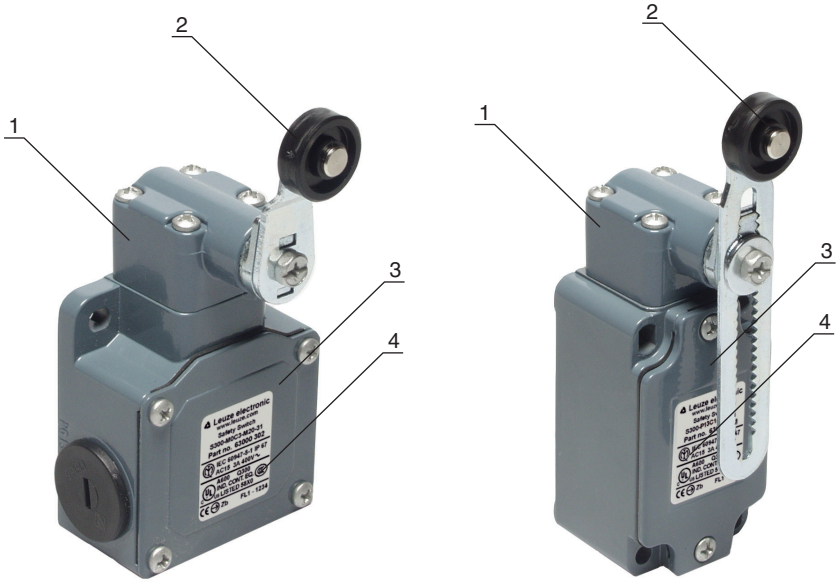

1 Actuator head
2 Actuator
3 Housing cover
4 Name plate (connection data, production code and year of manufacture)

Table 3.1: S300 Safety Position Switch

Article	Part No.	Description
S300-M0C3-M20-15	63000300	1NC + 1NO, metal design roller plunger, 3 cable entries
S300-M13C3-M20-15	63000301	2NC + 1NO, metal design roller plunger, 3 cable entries
S300-M0C3-M20-31	63000302	1NC + 1NO, metal design roller lever, 3 cable entries
S300-M13C3-M20-31	63000303	2NC + 1NO, metal design roller lever, 3 cable entries
S300-M13C3-M20-CB	63000304	2NC + 1NO, metal design, short actuator holder, 3 cable entries
S300-M13C3-M20-SB	63000305	2NC + 1NO, metal design, long actuator holder, 3 cable entries
S300-P13C1-M20-CB	63000306	2NC + 1NO, plastic design, short actuator holder, 1 cable entry
S300-P13C1-M12-CB	63000307	2NC + 1NO, plastic design, short actuator holder, 1 cable entry / M12 plug
S300-P13C1-M20-SB	63000308	2NC + 1NO, plastic design, long actuator holder, 1 cable entry
S300-P13C1-M12-SB	63000309	2NC + 1NO, plastic design, long actuator holder, 1 cable entry / M12 plug

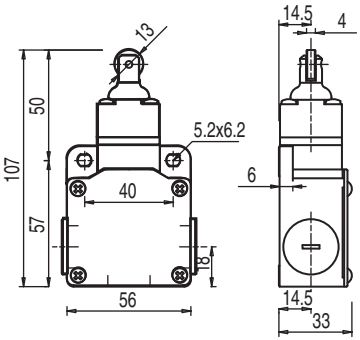

Figure 3.1: Dimensions of S300-M0C3-M20-15 and S300-M13C3-M20-15 in mm

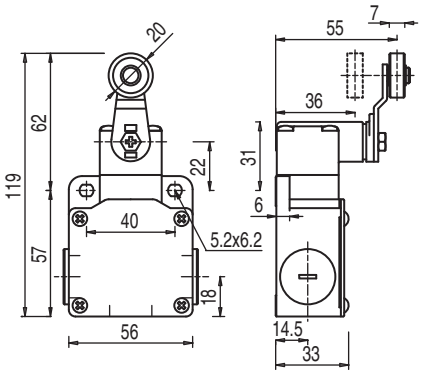

Figure 3.2: Dimensions of S300-M0C3-M20-31 and S300-M13C3-M20-31 in mm

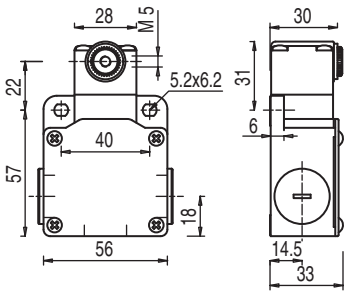

Figure 3.3: Dimensions of S300-M13C3-M20-CB in mm

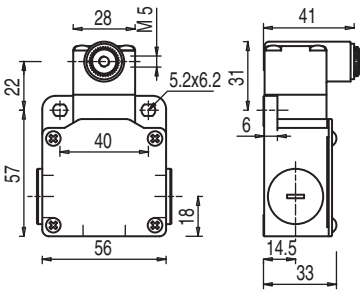

Figure 3.4: Dimensions of S300-M13C3-M20-SB in mm

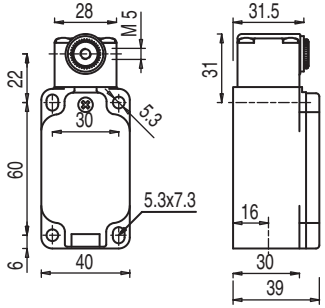

Figure 3.5: Dimensions of S300-P13C1-M20-CB and S300-P13C1-M12-CB in mm

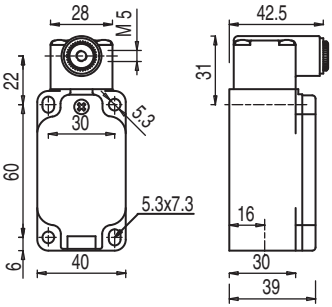

Figure 3.6: Dimensions of S300-P13C1-M20-SB and S300-P13C1-M12-SB in mm

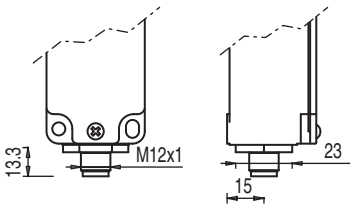

Figure 3.7: Dimensions of S300-P13C1-M12-xxx in mm (M12 plug dimensions)

The actuator head can be turned in 90° increments and set to 4 approach directions. The roller lever can be mounted with a 180° rotation and can be positioned in 10° increments.

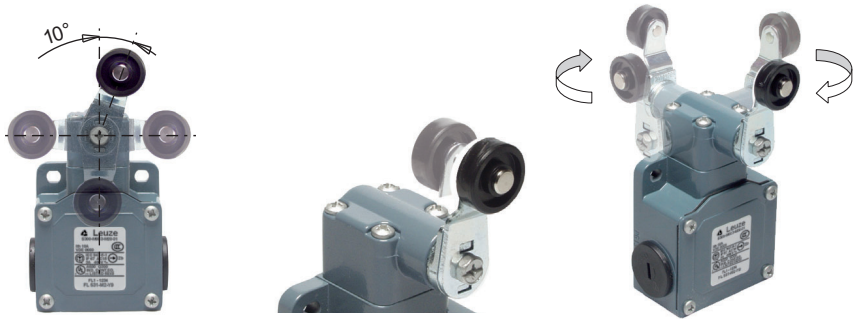

Figure 3.8: Adjustment options

4 Functions

The Safety Position Switch signals to the safety switching device whether the protective device is closed. Depending on actuator and set actuation directions, the Safety Position Switch can also signal alternating directions of danger situations. Release of the actuator closes the safety contacts; pressure on the actuator forces opening of the safety contacts upon opening of the protective device (e.g. a sliding gate). As a result, the machine can only be switched on if the protective device is closed.

5 Applications

The Safety Position Switch is suitable for e.g. the following protective devices:

- turning or sliding protective hoods and protective flaps
- laterally moveable protective gratings or sliding gates
- machine-actuated supplementary cut-off (e.g. in combination with other Safety Switches)

6 Mounting

WARNING

Severe accidents may result if the Safety Position Switch is not mounted properly!

The protective function of the Safety Position Switch is only ensured if appropriately and professionally mounted for the respective, intended area of application.

- Mounting may only be performed by competent personnel.
- Observe standards, regulations and these instructions.
- Observe mounting conditions exactly.
- Use separate mechanical limit stop (see figure 6.3).
- Set the distances to the actuator and its angles so that it is impossible to circumvent or encompass the protective device.
- Protect the housing from materials penetrating the enclosure (environmental conditions (see chapter 14)).
- Test to ensure proper function.

6.1 Adjusting the switching and approach direction

- Loosen the 4 screws on the actuator head.

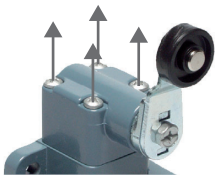

- Lift the actuator head.

WARNING

Severe accidents may result if the switching function is not set properly!

- Set the switching direction so that the NC contacts open upon opening of the protective device.

- If necessary, set the internal plunger to the correct switching direction in 90° increments (relative to the NC contacts).

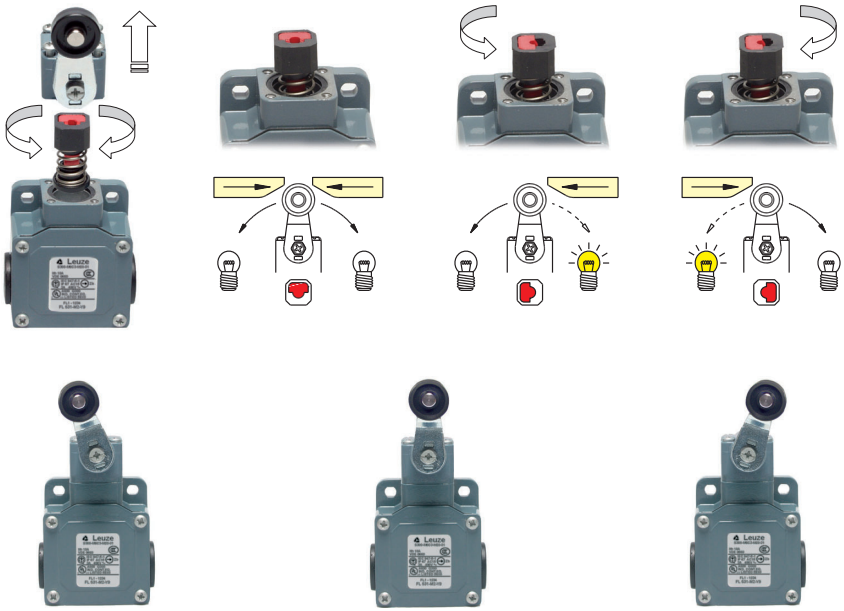

- Place the actuator head on the Safety Position Switch in the desired approach direction.

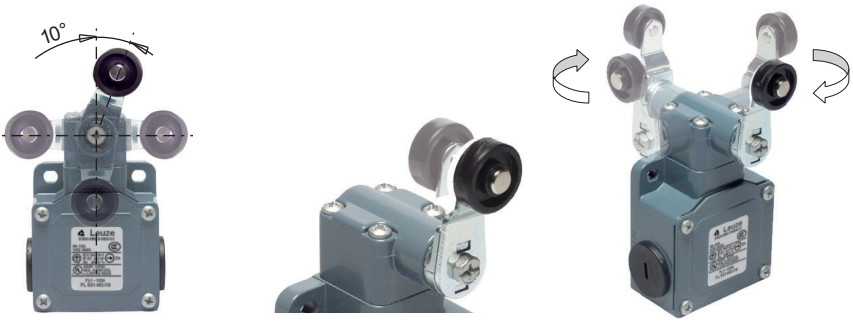

- Tighten the 4 screws on the actuator head with 0.8–1.2 Nm.
- If necessary, loosen the screw on the actuator (here: roller lever) and adjust it appropriately (rotate 180° and/or turn in 10° increments).
- If necessary, tighten the screw on the roller lever with 0.8–1.2 Nm.

6.2 Mounting the Safety Position Switch

Mounting conditions

The stop command must be triggered through pressure on the Safety Position Switch **upon opening** of the protective device, never by releasing the Safety Position Switch.

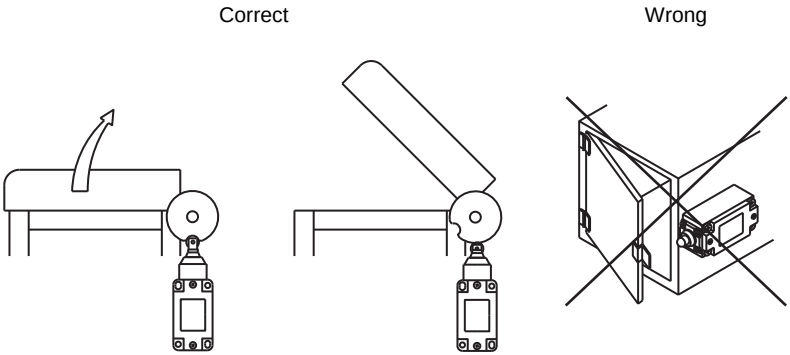

Figure 6.1: Mounting example with a turning protective device

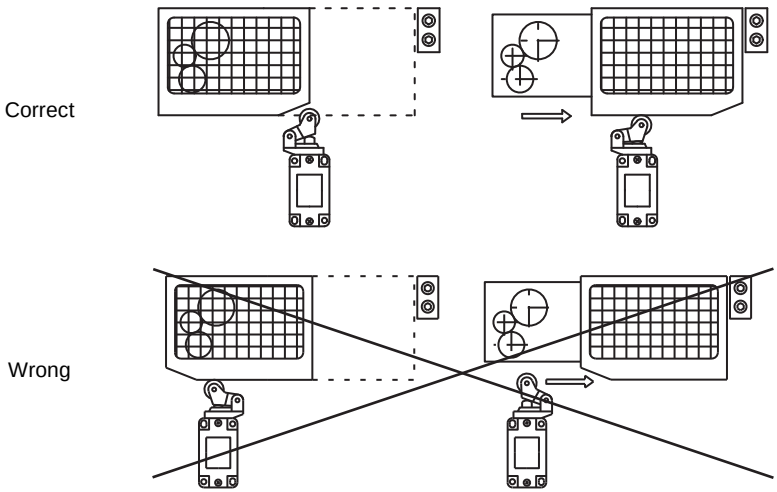

Figure 6.2: Mounting example with a sliding protective device

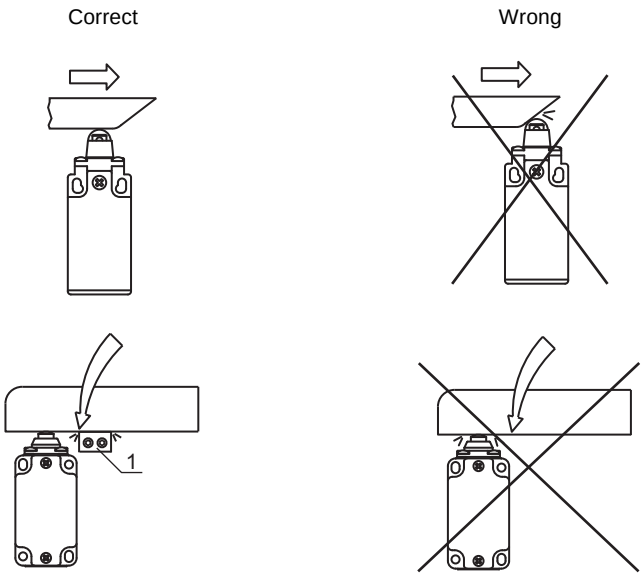

Figure 6.3: Mechanical limit stop (1)

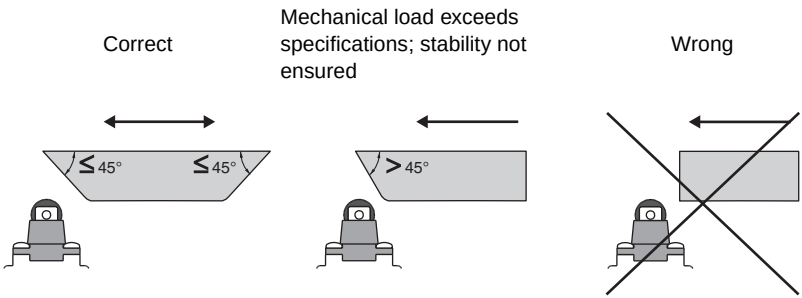

Figure 6.4: Roller plunger actuation

Actuator: roller plunger	j	v_{max} (m/s)	v_{min} (mm/s)	v_{min} (mm/s)
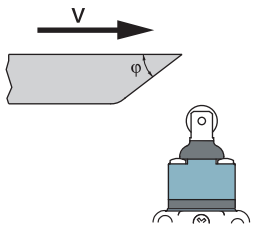	–	–	S300-M0C3-M20-15	S300-M13C3-M20-15
	15°	1.0	0.04	4.0
	30°	0.5	0.02	2.0
	45°	0.3	0.01	1.0

Correct

Mechanical load exceeds specifications; stability not ensured

Wrong

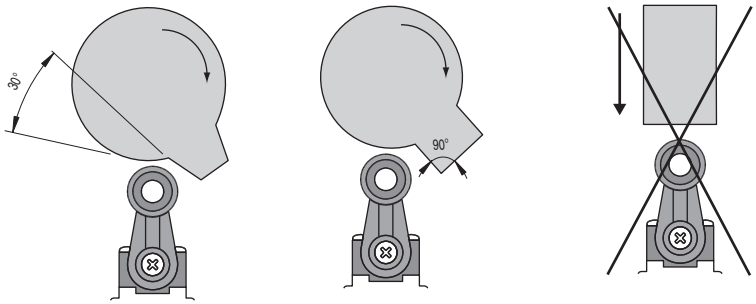

Figure 6.5: Roller lever actuation

Actuator: roller lever	j	v_{max} (m/s)	v_{min} (mm/s)	v_{min} (mm/s)
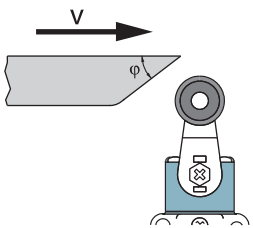	–	–	S300-M0xxx	S300-M13xxx
	15°	2.5	0.07	9.0
	30°	1.5	0.07	8.0
	45°	1.0	0.07	7.0
	60°	0.75	0.07	7.0

Mounting

Prerequisites for mounting:

- actuation direction is set
- fully assembled

NOTICE
The Safety Position Switch may be damaged if mounted improperly! Safety Position Switch is not suitable for large mechanical loads. ↳ Observe mounting conditions and dimensions exactly. ↳ Mount covers to protect against foreseeable damages.

↳ Select the mounting location so that the following conditions are satisfied:

- should be form-fitting to protect against changes in position; secured mounting is possible
- corresponding actuating element (moveable guard, control cam) is sufficiently secured against changes in position and the actuator is actuated with positive force
- accessible to qualified personnel for testing and replacement

↳ Position washers and screw down Safety Position Switch with 2–3 Nm.

7 Electrical connection

WARNING

Serious accidents may result if the electrical connection is faulty!

Electrical connection may only be performed by competent personnel.

7.1 Connecting the contact block

Prerequisites:

- temperature stability of the cable insulation material must be greater than the maximum temperature of the housing (see chapter 14)
- cable gland with appropriate protection rating
- maximum current load is observed (see chapter 14)

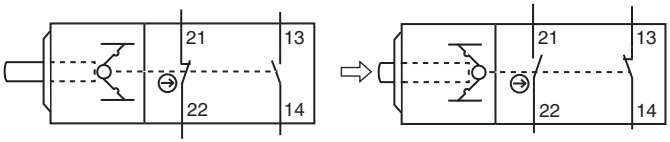

Figure 7.1: 1NC + 1NO (S300-M0C3-xxx)

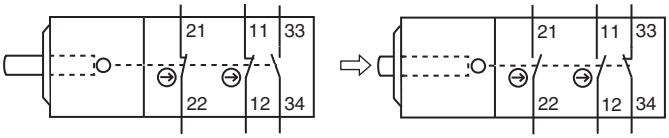

Figure 7.2: 2NC + 1NO (S300-M13C3-xxx, S300-P13C1-M20-xxx)

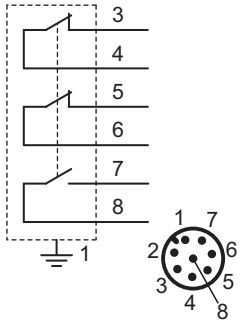

Figure 7.3: Pin assignment of the 8-pin M12 plug (S300-xxx-M12-xxx)

DANGER

Risk of death by electric shock!

- Interrupt the voltage supply to the Safety Position Switch.

- Unscrew the housing cover.
- Connect the contact block according to the application-specific circuit diagram.
- Tighten cable terminal screws with 0.6–0.8 Nm.
- Tighten the housing cover with 0.8–1.2 Nm.

7.2 Contact block characteristics

In the following, the switching behavior when the actuator is in motion is represented schematically. The bar color changes depending on the motion, whereby the changing of the bar color sends a signal to the switching point. Movement is specified either in degrees, or when no unit of measurement is given, in millimeters.

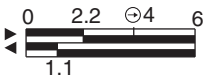

Figure 7.4: S300-MOxxx-15

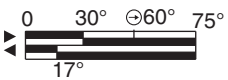

Figure 7.5: S300-MOxxx-31

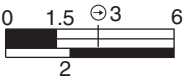

Figure 7.6: S300-M13xxx-15

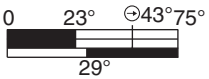

Figure 7.7: S300-M13xxx-31

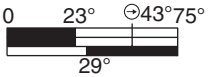

Figure 7.8: S300-M13xxx-CB, S300-M13xxx-SB, S300-P13xxx-CB, S300-P13xxx-SB when the actuator is used: AC-SL-R, AC-AL-R, AC-LL-R

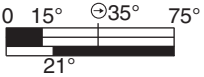

Figure 7.9: S300-M13xxx-CB, S300-M13xxx-SB, S300-P13xxx-CB, S300-P13xxx-SB when the actuator is used: AC-PL

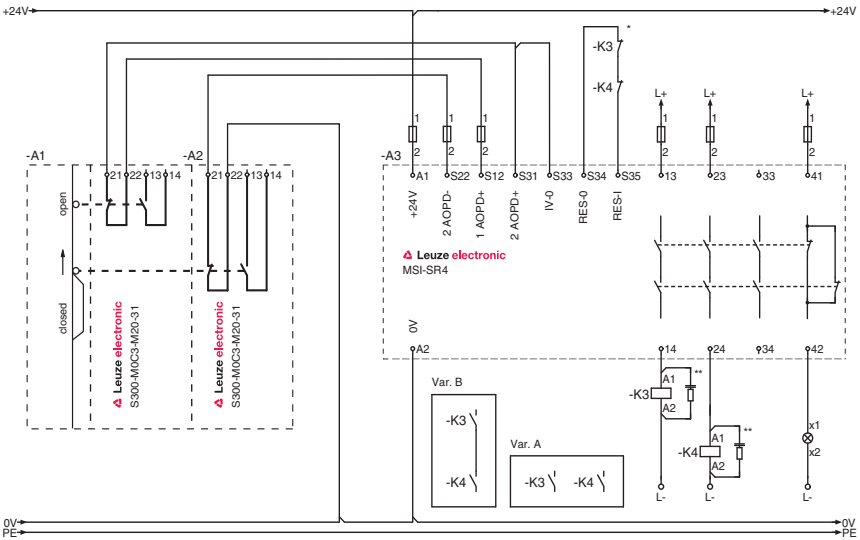

* Automatic start! It must be impossible to reach or walk behind the interlock device!

** Spark extinction circuit, suitable spark extinction provided

Figure 7.10: Connection example S300-M0C3-M20-15

8 Setting the device into service

Prerequisites:

- Safety Position Switch is mounted and connected according to these instructions
- operating personnel have been trained in the correct use

↳ Test the function of the Safety Position Switch (see chapter 9).

The Safety Position Switch is then ready for use.

9 Testing

S300 Safety Position Switches are maintenance-free. Nevertheless, they must be replaced after maximum 5,000,000 switching cycles.

- Always replace the entire Safety Position Switch including actuator.
- For the testing intervals, observe nationally applicable regulations.
- Document all tests in a comprehensible manner.

9.1 To be performed prior to the initial start-up by competent personnel

- Check whether the Safety Position Switch is operated according to its specified environmental conditions (see chapter 14).
- Check whether the Safety Position Switch is mounted in a form-fitting manner according to its specifications(see chapter 6.2).
- Check whether the actuator is form-fitting with positive actuation.
- Check whether the switching direction was set correctly and the stop command is output as soon as opening of the protective device begins.
- Test to ensure proper mechanical and electrical function (see chapter 9.2).

9.2 To be performed periodically by competent personnel

Mechanical function

- Stop the dangerous state and open the protective device.
- Check that the components are securely fastened.
- Test the cable entry for leaks.
- Check Safety Position Switch and actuator for damage, deposits, deformation and wear.
- Manually actuate roller lever or roller plunger (actuator) several times and check for ease of motion.
- Check the actuating surface (e.g. of the machine or sliding gate) for the actuator for wear.
- Check the interaction of the actuation surface and the actuator to ensure that it is form-fitting with positive actuation.

Electrical function

WARNING

Severe accidents may result if tests are not performed properly!

- Make certain that there are no persons in the danger zone.

- Stop the dangerous state and open the protective device.
- Make certain that the machine cannot be started while the protective device is open.
- Close the protective device and start the machine.
- Test several times whether the machine stops upon opening of the protective device.
- Test whether the dangerous state ends before the point of operation can be reached.

9.3 To be performed daily by the operating personnel

WARNING

Severe accidents may result if tests are not performed properly!

- Make certain that there are no persons in the danger zone.

- Stop the dangerous state and open the protective device.
- Check the Safety Position Switch and actuator for damage or tampering.
- Make certain that the machine cannot be started while the protective device is open.
- Close the protective device and start the machine.
- Test whether the machine stops upon opening of the protective device.

10 Cleaning

There must be no soiling (e.g. shavings and dust) present, especially in the actuator of the Safety Position Switch.

Prerequisites for cleaning:

- protective device is opened and machine is switched off
- voltage supply to the Safety Position Switch is interrupted

↳ Regularly clean the Safety Position Switch, actuator and actuation surface (e.g. of the machine or sliding gate) (e.g with a vacuum cleaner).

ПРОМЭЛЕКТРОНИКА / sales@prom-elec.com

11 Disposing

The nationally valid regulations for electro-mechanical components are to be observed when disposing.

12 Service and support

Telephone number for 24-hour standby service:
+49 (0) 7021/ 573-0

Service hotline:
+49 (0) 8141/ 5350-111
Monday to Thursday, 8.00 a.m. to 5.00 p.m. (UTC+1)
Friday, 8.00 a.m. to 16.00 p.m. (UTC +1)

E-mail:
service.protect@leuze.de Return address for repairs: Service Center
Leuze electronic GmbH + Co. KG
In der Braike 1
D-73277 Owen - Teck / Germany

Leuze electronic offers a regular safety inspection by a competent person.

13 Accessories

Table 13.1: Accessories for the S300 Safety Position Switch

Article	Part No.	Description
AC-A-M20-12NPT	63000843	Adapter, M20 x 1.5 on 1/2 NPT
AC-PLM-8	63000845	Built-in plug, M12, metal, with internal 8-pin connection cable
CB-M12-5000E-5GF	678055	PUR, 5-pin, 5 m, shielded, M12 coupling, straight, prefabricated on one end
CB-M12-10000E-5GF	678056	PUR, 5-pin, 10 m, shielded, M12 coupling, straight, prefabricated on one end
CB-M12-15000E-5GF	678057	PUR, 5-pin, 15 m, shielded, M12 coupling, straight, prefabricated on one end
CB-M12-25000E-5GF	678058	PUR, 5-pin, 25 m, shielded, M12 coupling, straight, prefabricated on one end
CB-M12-5000E-8GF	678060	PUR, 8-pin, 5 m, shielded, M12 coupling, straight, prefabricated on one end
CB-M12-10000E-8GF	678061	PUR, 8-pin, 10 m, shielded, M12 coupling, straight, prefabricated on one end
CB-M12-15000E-8GF	678062	PUR, 8-pin, 15 m, shielded, M12 coupling, straight, prefabricated on one end
CB-M12-25000E-8GF	678063	PUR, 8-pin, 25 m, shielded, M12 coupling, straight, prefabricated on one end
AC-SL-R	63000880	Actuator, straight roller lever with roll
AC-AL-R	63000881	Actuator, tilted roller lever with roll
AC-LL-R	63000882	Actuator, long roller lever with roll
AC-PL	63000883	Actuator, straight porcellain lever

13.1 Accessory dimensional drawings

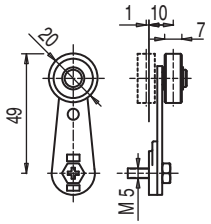

Figure 13.1: AC-SL-R actuator

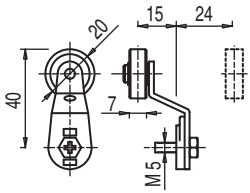

Figure 13.2: AC-AL-R actuator

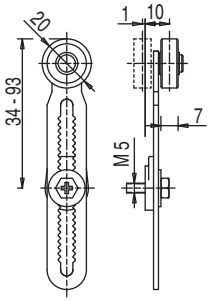

Figure 13.3: AC-LL-R actuator

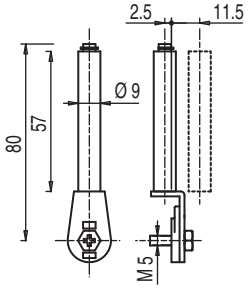

Figure 13.4: AC-PL actuator

14 Technical data

Table 14.1: General

Switch type	Interlock device without guard interlocking in accordance with EN 1088
Actuator	Plunger actuator, roller actuator with lever, mounted
Approach actuation directions	Plunger actuator: 1 x above, 4 x side (90°) Roller actuator: 360°, 4 x lateral (90°)
Switching direction of roller plunger	Both sides
Switching direction of roller lever	Left-right one side, both sides
Approach speed with angle of approach = 15°, 30°, 45°	S300-M0C3-M20-15: min. 0.04 mm/s, 0.02 mm/s, 0.01 mm/s max. 1.0 m/s, 0.5 m/s, 0.3 m/s S300-M13C3-M20-15: min. 4.0 mm/s, 2.0 mm/s, 1.0 mm/s max. 1.0 m/s, 0.5 m/s, 0.3 m/s
Approach speed with angle of approach = 15°, 30°, 45°, 60°	S300-M0xxx: min. 0.07 mm/s max. 2.5 m/s, 1.5 m/s, 1.0 m/s, 0.75 m/s S300-M13xxx, S300-P13xxx: min. 9 mm/s, 8 mm/s, 7 mm/s, 7 mm/s max. 2.5 m/s, 1.5 m/s, 1.0 m/s, 0.75 m/s
Actuating path with forced opening	S300-M0C3-M20-15: 4 mm S300-M13C3-M20-15: 3 mm S300-M0xxx: 60° S300-P13xxx, S300-M13xxx with AC-SL-R, AC-AL-R, AC-LL-R: 40° with AC-PL: 35°
Actuation force	Roller plunger: min. 11 N Roller lever: min. 0.1 Nm

Mechanical life time without actuator acc. to IEC 60947-5-1	5,000,000 switching cycles
Actuation frequency according to IEC 60947-5-1	max. 3600 per hour
Service life (T_M) in accordance with EN ISO 13849-1	20 years

Number of cycles before dangerous failure (B10d) according to EN 61810-2	40,000,000
Usage category in accordance with EN 60947-5-1 with screw terminal connection Maximum load when using 5-pin cables: Maximum load when using 8-pin cables:	AC 15 (Ue / Ie): 250V / 6A 400V / 4A 500V / 1A DC 13 (Ue / Ie): 24V / 6A 125V / 1.1A 250V / 0.4A 24 V / 4 A(see chapter 13) 24 V / 2 A(see chapter 13)
Usage category in accordance with EN 60947-5-1 with M12 plug connection	AC 15: (Ue / Ie) 24 V / 2 A DC 13: (Ue / Ie) 24 V / 2 A
Dimensions (dimensional drawings)	see chapter 3

Table 14.2: Safety

Protection rating	IP 67
Contact protection	S300-Mxxx: grounding S300-M0xxx: protective insulation 0
Contact allocation	S300-M0C3-xxx: 1NC + 1NO S300-M13xxx: 2NC + 1NO S300-P13xxx: 2NC + 1NO
Contact material	silver alloy

Switching principle	S300-M0xxx: snap-action contact S300-M13xxx: slow action contact
Opening of contact	positive-forced
Rated insulation voltage with screw terminal connection	500 VAC, 600 V DC
Rated insulation voltage with M12 plug connection	30 VAC, 36 V DC
Conventional thermal current with screw terminal connection	max. 10 A
Conventional thermal current with M12 plug connection	max. 2 A
Short circuit protection in accordance with IEC 60269-1 with screw terminal connection	10 A, 500 V, type aM
Short circuit protection in accordance with IEC 60269-1 with M12 plug connection	2 A, 500 V, type gG

Table 14.3: Housing

Housing material	S300-Mxxx: metal S300-Pxxx: plastic, glass fiber reinforced, self-extinguishing

Table 14.4: Connection

Number of cable entries	S300-MxxxC3xxx: 3 S300-PxxxC1xxx: 1
Type of cable entry	M20 x 1.5
Conductor cross-section (stranded) with screw terminal connection	1 x 0.5 mm^2 to 2 x 2.5 mm^2

Table 14.5: Environment

Temperature range, operation	–25 ... +80 °C
Degree of contamination, external, according to EN 60947-1	3

These tables do not apply in combination with additional M12 plug or connecting cable except where these components are explicitly mentioned.

15 EC Declaration of Conformity

Leuze electronic

the sensor people

EG-KONFORMITÄTS-ERKLÄRUNG	EC DECLARATION OF CONFORMITY	DECLARATION CE DE CONFORMITE
Der Hersteller	The Manufacturer	Le constructeur
	Leuze electronic GmbH + Co. KG In der Braike 1, PO Box 1111 73277 Owen, Germany	
erklärt, dass die nachfolgend aufgeführten Produkte den einschlägigen Anforderungen der genannten EG-Richtlinien und Normen entsprechen.	declares that the following listed products fulfil the relevant provisions of the mentioned EC Directives and standards.	déclare que les produits identifiés suivants sont conformes aux directives CE et normes mentionnées.
Produktbeschreibung:	Description of product:	Description de produit:
Sicherheits-Schalter S20, S200, S300, S400 Sicherheits-Zuhaltung L10, L100, L200 NOT-HALT-Befehlsgerät ERS200 Seriennummer siehe Typschild	**Safety Switch S20, S200, S300, S400 Safety Locking Device L10, L100, L200 E-STOP command device ERS200 Part No. see name plates**	**Interrupteur de sécurité S20, S200, S300, S400 Interverrouillage de sécurité L10, L100, L200 Appareil de commande d'ARRÊT D'URGENCE ERS200 Art. n° voir plaques signalétiques**
Angewandte EG-Richtlinie(n):	Applied EC Directive(s):	Directive(s) CE appliquées:
2006/42/EG 2004/108/EG 2006/95/EG	**2006/42/EC 2004/108/EC 2006/95/EC**	**2006/42/CE 2004/108/CE 2006/95/CE**
Angewandte Normen:	Applied standards:	Normes appliquées:
	EN 60947-5-1; IEC 60947-5-1	
Benannte Stelle / Baumusterprüfbescheinigung:	Notified Body / Certificate of Type Examination:	Organisme notifié / Attestation d'examen CE de type:
IMQ S.p.A. Istituto Italiano Del Marchio Di Qualitá Via Quintiliano 43 I-20138 Milano	/ **CAO2.03747(S20); CAO2.04212 (L200); CAO2.03756 (S400); CAO2.03750 (L10-P)**	**CAO2.03748 (L100)); CAO2.03749 (S200, S300); CAO2.03749 (ERS200, L10-M);**
Bevollmächtigter für die Zusammenstellung der technischen Unterlagen:	Authorized person to compile the technical file:	Personne autorisée à constituer le dossier technique:
Robert Sammer; Leuze electronic GmbH + Co. KG, business unit safety systems Liebigstr. 4; 82256 Fuerstenfeldbruck; Germany		

Owen, 06.05.10
Datum / Date / Date

Dr. Harald Grübel, Geschäftsführer / Director / Directeur

Leuze electronic GmbH + Co. KG
In der Braike 1
D-73277 Owen
Telefon +49 (0) 7021 573-0
Telefax +49 (0) 7021 573-199
info@leuze.de
www.leuze.com

LEO-ZQM-149-01-FO

Leuze electronic GmbH + Co. KG, Sitz Owen, Registergericht Stuttgart, HRA 230712
Persönlich haftende Gesellschafterin Leuze electronic Geschäftsführungs-GmbH, Sitz Owen, Registergericht Stuttgart, HRB 230550
Geschäftsführer: Dr. Harald Grübel (Vorsitzender), Karsten Just
USt.-IdNr. DE 145912521 | Zollnummer 2554232
Es gelten ausschließlich unsere aktuellen Verkaufs- und Lieferbedingungen
Only our current Terms and Conditions of Sale and Delivery shall apply

Nr. 609340-2010/05

You can download this EC Declaration of Conformity as a PDF from:
http://www.leuze.com/s300/