Technical data sheet
Throughbeam photoelectric sensor

Part no.: 50139706

LE25C/2N-200-M12

Figure can vary

Contents

- Technical data
- Dimensioned drawings
- Electrical connection
- Diagrams
- Suitable transmitters
- Part number code
- Notes
- Further information
- Accessories

ПРОМЭЛЕКТРОНИКА / sales@prom-elec.com

Technical data

Basic data

Series	25C
Operating principle	Throughbeam principle
Device type	Receiver

Optical data

Operating range	Guaranteed operating range
Operating range	0 ... 25 m
Operating range limit	Typical operating range
Operating range limit	0 ... 30 m
LED group	Exempt group (in acc. with EN 62471)

Electrical data

Protective circuit	Polarity reversal protection
	Short circuit protected

Performance data

Supply voltage U_B	10 ... 30 V, DC, Incl. residual ripple
Residual ripple	0 ... 15 %, From U_B
Open-circuit current	0 ... 20 mA

Outputs

Number of digital switching outputs	2 Piece(s)

Switching outputs

Voltage type	DC
Switching current, max.	100 mA
Switching voltage	high: ≥(U_B-2V)
	Low: ≤2V

Switching output 1

Assignment	Connection 1, pin 4
Switching element	Transistor, NPN
Switching principle	Light switching

Switching output 2

Assignment	Connection 1, pin 2
Switching element	Transistor, NPN
Switching principle	Dark switching

Timing

Switching frequency	1,500 Hz
Response time	0.33 ms
Readiness delay	300 ms

Connection

Connection 1

Function	Signal OUT
	Voltage supply
Type of connection	Cable with connector
Cable length	200 mm
Sheathing material	PUR
Cable color	Black
Wire cross section	0.2 mm²
Thread size	M12
Type	Male
Material	PUR
No. of pins	4 -pin
Encoding	A-coded

Mechanical data

Dimension (W x H x L)	15 mm x 42.7 mm x 30 mm
Housing material	Plastic
Plastic housing	ABS
Lens cover material	Plastic
Net weight	33 g
Housing color	Red
Type of fastening	Through-hole mounting with M4 thread
	Via optional mounting device
Compatibility of materials	ECOLAB

Environmental data

Ambient temperature, operation	-40 ... 60 °C
Ambient temperature, storage	-40 ... 70 °C

Certifications

Degree of protection	IP 67
	IP 69K
Protection class	III
Certifications	c UL US
Standards applied	IEC 60947-5-2

Classification

Customs tariff number	85365019
eCl@ss 5.1.4	27270901
eCl@ss 8.0	27270901
eCl@ss 9.0	27270901
eCl@ss 10.0	27270901
eCl@ss 11.0	27270901
ETIM 5.0	EC002716
ETIM 6.0	EC002716
ETIM 7.0	EC002716

Dimensioned drawings

All dimensions in millimeters

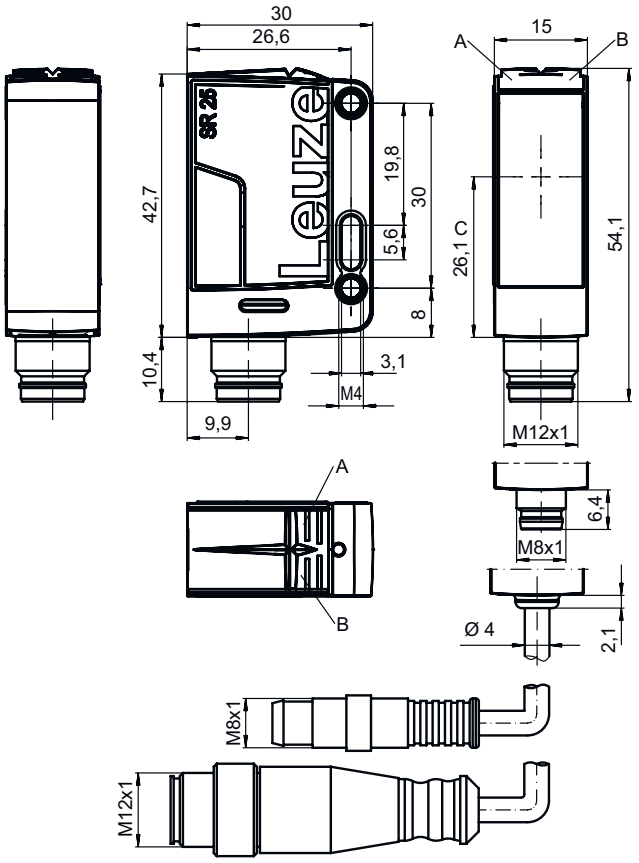

A Green LED
B Yellow LED
C Optical axis

ПРОМЭЛЕКТРОНИКА / sales@prom-elec.com

Electrical connection

Connection 1

Function	Signal OUT
	Voltage supply
Type of connection	Cable with connector
Cable length	200 mm
Sheathing material	PUR
Cable color	Black
Wire cross section	0.2 mm²
Thread size	M12
Type	Male
Material	PUR
No. of pins	4 -pin
Encoding	A-coded

Pin	Pin assignment
1	V+
2	OUT 2
3	GND
4	OUT 1

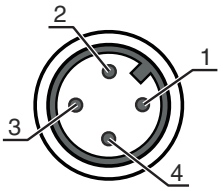

Diagrams

Typ. response behavior

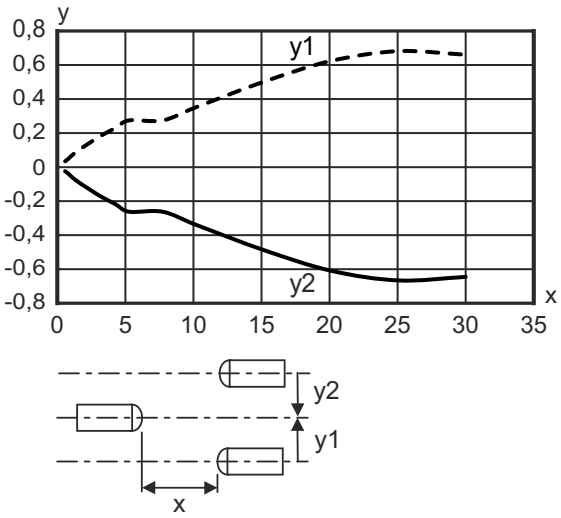

x Distance [m]
y Misalignment [m]

Suitable transmitters

	Part no.	Designation	Article	Description
	50139693	LS25C/8X-200-M12	Throughbeam photoelectric sensor transmitter	Special version: Activation input Operating range limit: 0 ... 30 m Light source: LED, Red Supply voltage: DC Connection: Cable with connector, 200 mm, M12, PUR, 4 -pin

Part number code

Part designation: **AAA25C d EE-f.GGH/iJ-K**

AAA25C	**Operating principle / construction** HT25C: diffuse reflection sensor with background suppression PRK25C: retro-reflective photoelectric sensor with polarization filter LS25C: throughbeam photoelectric sensor transmitter LE25C: throughbeam photoelectric sensor receiver DRT25C: Dynamic reference diffuse sensor
d	**Light type** n/a: red light I: infrared light
EE	**Light source** n/a: LED L1: laser class 1 L2: laser class 2
f	**Preset range (optional)** n/a: operating range acc. to data sheet xxxF: preset range [mm]
GG	**Equipment** A: autocollimation principle (single lens) S: small light spot D: detection of stretch-wrapped objects X: extended model HF: suppression of HF illumination (LED) XL: extra long light spot T: autocollimation principle (single lens) for highly transparent bottles without tracking TT: autocollimation principle (single lens) for highly transparent bottles with tracking

Part number code

H	**Operating range adjustment** 1: 270° potentiometer 2: multiturn potentiometer 3: teach-in via button
i	**Switching output/function OUT 1/IN: Pin 4 or black conductor** 2: NPN transistor output, light switching N: NPN transistor output, dark switching 4: PNP transistor output, light switching P: PNP transistor output, dark switching X: pin not used 8: activation input (activation with high signal) L: IO-Link interface (SIO mode: PNP light switching, NPN dark switching) 6: push-pull switching output, PNP light switching, NPN dark switching G: push-pull switching output, PNP dark switching, NPN light switching
J	**Switching output / function OUT 2/IN: pin 2 or white conductor** 2: NPN transistor output, light switching N: NPN transistor output, dark switching 4: PNP transistor output, light switching P: PNP transistor output, dark switching W: warning output X: pin not used 6: push-pull switching output, PNP light switching, NPN dark switching T: teach-in via cable G: push-pull switching output, PNP dark switching, NPN light switching
K	**Electrical connection** n/a: cable, standard length 2000 mm, 4-wire 200-M12: cable, length 200 mm with M12 connector, 4-pin, axial (plug) M8: M8 connector, 4-pin (plug) M12: M12 connector, 4-pin (plug) 200-M8: cable, length 200 mm with M8 connector, 4-pin, axial (plug)

Note

- A list with all available device types can be found on the Leuze website at www.leuze.com.

Notes

Observe intended use!

- This product is not a safety sensor and is not intended as personnel protection.
- The product may only be put into operation by competent persons.
- Only use the product in accordance with its intended use.

For UL applications:

- Only for use in "class 2" circuits
- These proximity switches shall be used with UL Listed Cable assemblies rated 30V, 0.5A min, in the field installation, or equivalent (categories: CYJV/CYJV7 or PVVA/PVVA7)

Further information

- Sum of the output currents for both outputs 100 mA

Accessories

Connection technology - Connection cables

	Part no.	Designation	Article	Description
	50130652	KD U-M12-4A-V1-050	Connection cable	Connection 1: Connector, M12, Axial, Female, A-coded, 4 -pin Connection 2: Open end Shielded: No Cable length: 5,000 mm Sheathing material: PVC
	50130690	KD U-M12-4W-V1-050	Connection cable	Connection 1: Connector, M12, Angled, Female, A-coded, 4 -pin Connection 2: Open end Shielded: No Cable length: 5,000 mm Sheathing material: PVC

Mounting technology - Mounting brackets

	Part no.	Designation	Article	Description
	50118543	BT 300M.5	Mounting bracket	Design of mounting device: Angle, L-shape Fastening, at system: Through-hole mounting Mounting bracket, at device: Screw type, Suited for M4 screws Type of mounting device: Adjustable Material: Stainless steel

Mounting technology - Rod mounts

	Part no.	Designation	Article	Description
	50117829	BTP 200M-D12	Mounting system	Design of mounting device: Protection hood Fastening, at system: For 12 mm rod Mounting bracket, at device: Screw type Type of mounting device: Clampable, Adjustable, Turning, 360° Material: Metal
	50117252	BTU 300M-D12	Mounting system	Design of mounting device: Mounting system Fastening, at system: For 12 mm rod, Sheet-metal mounting Mounting bracket, at device: Screw type, Suited for M4 screws Type of mounting device: Clampable, Adjustable, Turning, 360° Material: Metal

Note	
	✎ A list with all available accessories can be found on the Leuze website in the Download tab of the article detailed page.