Leuze electronic

the sensor people

AMS 358*i*

Optical Laser Measurement System EtherNet/IP

en 03-2014/12 50113351
We reserve the right to
make technical changes

TECHNICAL DESCRIPTION

ПРОМЭЛЕКТРОНИКА / sales@prom-elec.com

© 2014
Leuze electronic GmbH + Co. KG
In der Braike 1
D-73277 Owen - Teck / Germany
Phone: +49 7021 573-0
Fax: +49 7021 573-199
http://www.leuze.com
info@leuze.de

The main menus

```
AMS 358i 120
Leuze electronic
      GmbH & Co. KG
SW: V 1.3.0   HW:1
SN: ----------------------
```

Device information - main menu

This menu item contains detailed information on
- device model,
- manufacturer,
- software and hardware version,
- serial number.

No entries can be made via the display.

```
Network information
Address:   ---.---.---.---
Net mask:  ---.---.---.---
Gateway:   ---.---.---.---
MAC ID:    --.--.--.--.--.--
```

Network information - main menu

Under this menu item, you will find detailed information on the network addresses.
No entries can be made via the display.

```
IO1 LSR PLB        ENIP
IO2 TMP ATT
ERR

  + 87.000m
```

Status- and measurement data - main menu

- Display of status-, warning-, and error messages.
- Status overview of the switching inputs/outputs.
- Bar graph for the reception level.
- Activated interface.
- Measurement value.

No entries can be made via the display.
See "Indicators in the display" on page 41.

```
Parameter
  Parameter handling
  EtherNet/IP
  Position value
  I/O
  Other
```

Parameter - main menu

- Configuration of the AMS.

See "Parameter menu" on page 47.

```
Language selection
o Deutsch
● English
o Español
o Français
o Italiano
```

Language selection - main menu

- Selection of the display language.

See "Language selection menu" on page 50.

```
Service
  Status messages
  Diagnostics
  Expanded diagnostics
```

Service - main menu

- Display of status messages.
- Display of diagnostic data.

No entries can be made via the display.
See "Service menu" on page 51.

Device buttons:

- Navigate **upward/laterally**
- Navigate **downward/laterally**
- **ESCAPE** leave
- **ENTER** confirm

Input of values

```
100
 <-0123456789     save
Standard ----- Unit
   63  |    |
```

- ◄ + ↵ **Delete character**
- 0...9 + ↵ **Enter digit**
- save + ↵ **Save input**

1 General information 5
1.1 Explanation of symbols 5
1.2 Declaration of conformity 5
1.3 Description of functions AMS 358*i* 6

2 Safety 7
2.1 Intended use 7
2.2 Foreseeable misuse 8
2.3 Competent persons 8
2.4 Disclaimer 9
2.5 Laser safety notices 9

3 Fast commissioning / operating principle 12
3.1 Mounting the AMS 358*i* 12
3.1.1 Mounting the device 12
3.1.2 Mounting the reflector 12
3.2 Connecting the voltage supply 13
3.2.1 Connecting the EtherNet/IP network 13
3.3 Display 13
3.4 AMS 358*i* on EtherNet/IP 13

4 Specifications 17
4.1 Specifications of the laser measurement system 17
4.1.1 General specifications AMS 358*i* 17
4.1.2 Dimensioned drawing AMS 358*i* 19
4.1.3 Type overview AMS 358*i* 20

5 Installation and mounting 21
5.1 Storage, transportation 21
5.2 Mounting the AMS 358*i* 22
5.2.1 Optional mounting bracket 24
5.2.2 Parallel mounting of the AMS 358*i* 25
5.2.3 Parallel mounting of AMS 358*i* and DDLS optical data transmission 26
5.3 Mounting the AMS 358*i* with laser beam deflector unit 27
5.3.1 Mounting the laser beam deflector unit With integrated mounting bracket 27
5.3.2 Dimensioned drawing of US AMS 01 deflector unit 28

5.3.3 Mounting the US 1 OMS deflector unit without mounting bracket 29

6 Reflectors 30

6.1 General information 30

6.2 Description of the reflective tape. 30
6.2.1 Specifications of the self-adhesive foil 31
6.2.2 Specifications of the reflective tape on a metal plate 31
6.2.3 Dimensioned drawing of reflective tape on a metal plate 32
6.2.4 Specifications of heated reflectors 33
6.2.5 Dimensioned drawing of heated reflectors 34

6.3 Selecting reflector sizes 35

6.4 Mounting the reflector 36
6.4.1 General information 36
6.4.2 Mounting the reflector 36
6.4.3 Table of reflector pitches 39

7 Electrical connection 40

7.1 Safety notices for the electrical connection 40

7.2 PWR – voltage supply / switching input/output 41

7.3 EtherNet/IP BUS IN. 41

7.4 EtherNet/IP BUS OUT. 42

7.5 Service. 42

8 Display and control panel AMS 358*i* 43

8.1 Structure of the control panel 43

8.2 Status display and operation 43
8.2.1 Indicators in the display. 43
8.2.2 LED status displays 45
8.2.3 Control buttons 47

8.3 Menu description 48
8.3.1 The main menus 48
8.3.2 Parameter menu 49
8.3.3 Language selection menu 52
8.3.4 Service menu 53

8.4 Operation. 53

9 EtherNet/IP interface 56

9.1 EtherNet/IP – general info 56

9.2 Topology 58

9.3 Addressing 58
9.3.1 Entering the network addresses via the display 58

9.4 EtherNet/IP device class 60
9.4.1 Communication / EDS file 60

9.5 EtherNet/IP - Electrical connection 61

9.6 EDS file - general info 62

9.7 Configuration steps for a Rockwell control without EDS support 63
9.7.1 Integrating the hardware into the PLC using the generic Ethernet module 63

9.8 Configuration steps for a Rockwell control with EDS support 64
9.8.1 Integrating the hardware into the PLC and installing the EDS file 64

9.9 Configuration examples 66
9.9.1 Example 1 - RSLogix 5000 up to software version V19.xx 66
9.9.2 Example 2 - RSLogix 5000 up to software version V19.xx 67
9.9.3 Example 3 - RSLogix 5000 for software versions V20.00 and higher 68

9.10 EDS file - detailed description 69
9.10.1 Class 4 Assembly 69
9.10.2 Class 1 Identity object 74
9.10.3 Class 35 Position sensor object 77
9.10.4 Class 100 Display configuration 84
9.10.5 Class 103 Switching inputs/outputs 85
9.10.6 Class 104 Behavior in the case of error 88
9.10.7 Class 105 Velocity monitoring 90

10 Diagnostics and troubleshooting 94

10.1 Service and diagnostics in the display of the AMS 358*i* 94
10.1.1 Status messages 94
10.1.2 Diagnostics 95
10.1.3 Expanded diagnostics 95

10.2 General causes of errors 95
10.2.1 Power LED 97

10.3 Interface errors 97
10.3.1 Net LED 97

10.4 Status display in the display of the AMS 358*i* 97

11 Type overview and accessories 99

11.1 Type key 99

11.2 Type overview AMS 358*i* (EtherNet/IP) 99

11.3 Overview of reflector types 100

11.4 Accessories. 100

11.4.1 Accessory mounting bracket. 100

11.4.2 Accessory deflector unit 100

11.4.3 Accessory M12 connector. 100

11.4.4 Accessory ready-made cables for voltage supply. 101

11.4.5 Accessory ready-made cables for EtherNet/IP 102

12 Maintenance 104

12.1 General maintenance information 104

12.2 Repairs, servicing 104

12.3 Disassembling, packing, disposing 104

1 General information

1.1 Explanation of symbols

The symbols used in this operating manual are explained below.

Attention!

This symbol precedes text messages which must strictly be observed. Failure to comply with this information results in injuries to personnel or damage to the equipment.

Attention Laser!

This symbol warns of possible danger caused by hazardous laser radiation.

Notice!

This symbol indicates text passages containing important information.

1.2 Declaration of conformity

The AMS 358*i* absolute measuring optical laser measurement system was designed and manufactured in accordance with applicable European directives and standards.

The AMS series is "UL LISTED" according to American and Canadian safety standards and fulfills the requirements of Underwriter Laboratories Inc. (UL).

Notice!

The Declaration of Conformity for these devices can be requested from the manufacturer.

The manufacturer of the product, Leuze electronic GmbH + Co. KG in D-73277 Owen/Teck, possesses a certified quality assurance system in accordance with ISO 9001.

1.3 Description of functions AMS 358*i*

The AMS 358*i* optical laser measurement system calculates distances to fixed as well as moving system parts. The distance to be measured is calculated according to the principle of the propagation time of radiated light. Here, the light emitted by the laser diode is reflected by a reflector onto the receiving element of the laser measurement system. The AMS 358*i* uses the "propagation time" of the light to calculate the distance to the reflector. The high absolute measurement accuracy of the laser measurement system and the fast integration time are designed for position control applications.

With the AMS 3xx*i* product series, Leuze electronic makes available a range of internationally relevant interfaces. Note that each interface version listed below corresponds to a different AMS 3xx*i* model.

PROFIBUS, SSI	**AMS 304*i***
PROFINET	**AMS 348*i***
DeviceNet	**AMS 355*i***
EtherNet/IP	**AMS 358*i***
CANopen	**AMS 335*i***
EtherCAT	**AMS 338*i***
Ethernet	**AMS 308*i***
INTERBUS	**AMS 384*i***
RS485	**AMS 301*i***
RS232, RS422	**AMS 300*i***

2 Safety

This sensor was developed, manufactured and tested in line with the applicable safety standards. It corresponds to the state of the art.

2.1 Intended use

The AMS is an absolute measuring optical laser measurement system which allows distance measurement of up to 300m against a reflector.

Areas of application

The AMS is designed for the following areas of application:

- Positioning of automated, moving plant components
- Travel and lifting axes of high-bay storage devices
- Repositioning units
- Gantry crane bridges and their trolleys
- Lifts
- Electroplating plants

CAUTION

Observe intended use!

- Only operate the device in accordance with its intended use. The protection of personnel and the device cannot be guaranteed if the device is operated in a manner not complying with its intended use.
  Leuze electronic GmbH + Co. KG is not liable for damages caused by improper use.
- Read the technical description before commissioning the device. Knowledge of this technical description is an element of proper use.

NOTICE

Comply with conditions and regulations!

- Observe the locally applicable legal regulations and the rules of the employer's liability insurance association.

Attention

For UL applications, use is permitted exclusively in Class 2 circuits according to NEC (National Electric Code).

2.2 Foreseeable misuse

Any use other than that defined under "Intended use" or which goes beyond that use is considered improper use.

In particular, use of the device is not permitted in the following cases:

- Rooms with explosive atmospheres
- Circuits relevant to safety
- For medicinal purposes

NOTICE
Do not modify or otherwise interfere with the device. ↳ Do not carry out modifications or otherwise interfere with the device. The device must not be tampered with and must not be changed in any way. The device must not be opened. There are no user-serviceable parts inside. Repairs must only be performed by Leuze electronic GmbH + Co. KG.

2.3 Competent persons

Connection, mounting, commissioning and adjustment of the device must only be carried out by competent persons.

Prerequisites for competent persons:

- They have a suitable technical education.
- They are familiar with the rules and regulations for occupational safety and safety at work.
- They are familiar with the technical description of the device.
- They have been instructed by the responsible person on the mounting and operation of the device.

Certified electricians

Electrical work must be carried out by a certified electrician.

Due to their technical training, knowledge and experience as well as their familiarity with relevant standards and regulations, certified electricians are able to perform work on electrical systems and independently detect possible dangers.

In Germany, certified electricians must fulfill the requirements of accident-prevention regulations BGV A3 (e.g. electrician foreman). In other countries, there are respective regulations that must be observed.

2.4 Disclaimer

Leuze electronic GmbH + Co. KG is not liable in the following cases:

- The device is not being used properly.
- Reasonably foreseeable misuse is not taken into account.
- Mounting and electrical connection are not properly performed.
- Changes (e.g., constructional) are made to the device.

2.5 Laser safety notices

ATTENTION LASER RADIATION – LASER CLASS 2

Never look directly into the beam!

The device satisfies the requirements of IEC 60825-1:2007 (EN 60825-1:2007) safety regulations for a product in **laser class 2** as well as the U.S. 21 CFR 1040.10 regulations with deviations corresponding to "Laser Notice No. 50" from June 24th, 2007.

- Never look directly into the laser beam or in the direction of reflecting laser beams.
  If you look into the beam path over a longer time period, there is a risk of injury to the retina.
- Do not point the laser beam of the device at persons!
- Interrupt the laser beam using a non-transparent, non-reflective object if the laser beam is accidentally directed towards a person.
- When mounting and aligning the device, avoid reflections of the laser beam off reflective surfaces!
- CAUTION! The use of operating or adjusting devices other than those specified here or carrying out of differing procedures may lead to dangerous exposure to radiation.
- Adhere to the applicable legal and local regulations regarding protection from laser beams.
- The device must not be tampered with and must not be changed in any way.
  There are no user-serviceable parts inside the device.
  Repairs must only be performed by Leuze electronic GmbH + Co. KG.

NOTICE

Affix laser information and warning signs!

Laser information and warning signs are attached to the device (see figure 2.1):

In addition, self-adhesive laser warning and information signs (stick-on labels) are supplied in several languages (see figure 2.2).

- Affix the laser information sheet to the device in the language appropriate for the place of use.
  When using the device in the US, use the stick-on label with the "Complies with 21 CFR 1040.10" notice.
- Affix the laser information and warning signs near the device if no signs are attached to the device (e.g., because the device is too small) or if the attached laser information and warning signs are concealed due to the installation position.
  Affix the laser information and warning signs so that they are legible without exposing the reader to the laser radiation of the device or other optical radiation.

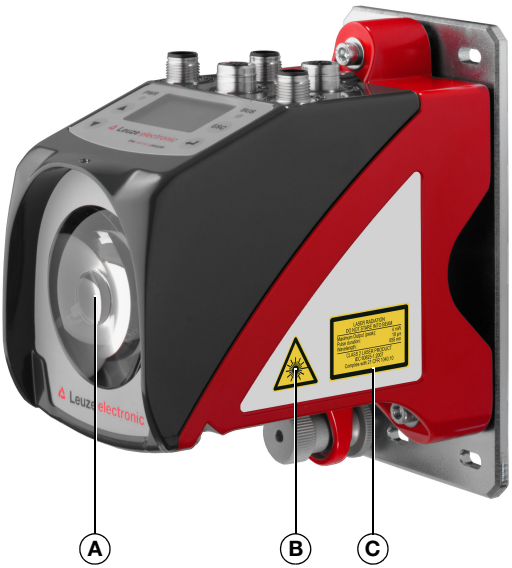

A Laser aperture
B Laser warning sign
C Laser information sign with laser parameters

Figure 2.1: Laser apertures, laser warning signs

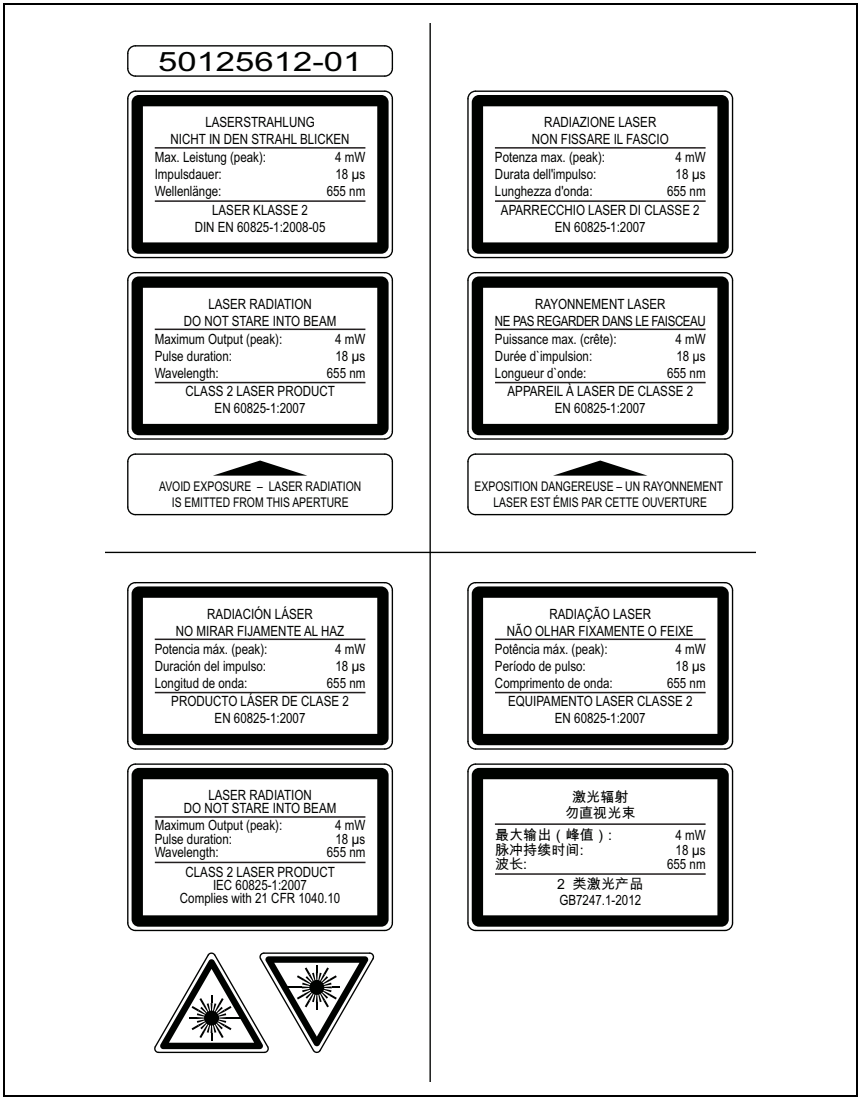

Figure 2.2: Laser warning and information signs – supplied stick-on labels

3 Fast commissioning / operating principle

Notice!

*Below, you will find a **short description for the initial commissioning** of the AMS 358i. Detailed explanations for the listed points can be found throughout the handbook.*

3.1 Mounting the AMS 358*i*

The AMS 358*i* and the corresponding reflector are mounted on two mutually opposing, plane-parallel, flat walls.

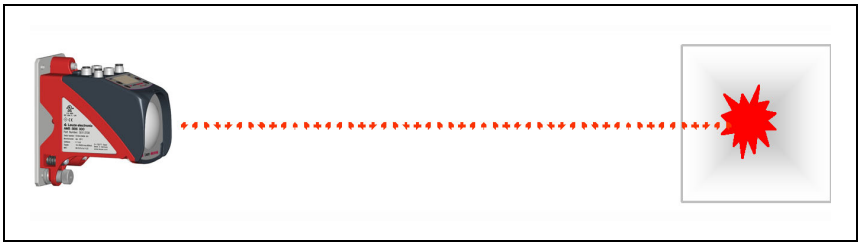

Figure 3.1: Schematic illustration of mounting

Attention!

For error-free position measurement, there must be an unobstructed line-of-sight between the AMS 358*i and the reflector.*

3.1.1 Mounting the device

The laser is mounted on a vertical wall using 4 screws (M5).

Alignment is performed using 2 adjustment screws. Adjust so that the laser light spot is positioned at the center of the reflector. The alignment is to be secured with the knurled nut and locked with the M5 nut.

Further information can be found in chapter 5.2 and chapter 5.3.

3.1.2 Mounting the reflector

The reflector is available both as self-adhesive tape and pre-mounted on a metal plate. The reflector on a metal plate is mounted on a vertical wall with 4 screws (M5). The reflector is angled using the included shims. Incline the reflector by approx. 1°.

The self-adhesive tape is mounted in the same way, the metal plate must be provided for it on-site.

Detailed information can be found in chapter 6.4.

3.2 Connecting the voltage supply

The laser measurement system is connected using M12 connectors. The voltage supply is connected via the **PWR** M12 connection.

Detailed information can be found in chapter 7.

3.2.1 Connecting the EtherNet/IP network

The EtherNet/IP is connected via D-coded M12 connectors for **BUS IN** and **BUS OUT**. BUS IN and BUS OUT are coupled by means of an internal switch.

Detailed information can be found in chapter 7.

3.3 Display

Once the laser measurement system is supplied with voltage, the device status as well as the measured position values can be read on the display. The display automatically switches to the display of the measurement values.

Use the up/down buttons ▲ ▼ to the left of the display to read and change a wide range of data and parameters.

Depending on connected interface, the network address must be configured via the display.

Detailed information can be found in chapter 8.

3.4 AMS 358*i* on EtherNet/IP

Notice!

Prior to commissioning, the EDS file of the AMS 358i should be installed in the corresponding control.

Commissioning on the EtherNet/IP is performed according to the following scheme:

1. Activate parameter enabling
2. Address assignment (manual or automatic via DHCP or BootP)
3. Deactivate parameter enabling
4. Configure the participant
5. Transfer the data to the control
6. Configuration of the config assembly, when doing so observe chapter 9.6 without fail
7. Use explicit messaging services

Activating parameter enabling

To be able to perform the subsequent address assignment, parameter enabling must first be activated.

↳ *To do this, select the* ON *menu item in the* Parameter -> Parameter handling -> Parameter enable *menu.*

Notice!

The display is inverted while parameter enabling is active.

Manually assigning network addresses of the AMS 358i

In the display under the EtherNet/IP menu item, you will find the input masks for

- IP address,
- Network mask (subnet),
- Gateway address (provided a gateway exists).

↳ *Enter the corresponding addresses.*

Automatically assigning addresses via DHCP

Under the EtherNet/IP menu item, you will find the input mask for activating or deactivating the DHCP functionality. DHCP address assignment is set to "ON" by default.

↳ *To deactivate DHCP, select* OFF.

Provided the DHCP server supplies the corresponding addresses, the address fields for IP address, network mask and gateway address are preset by the DHCP server.

Automatically assigning addresses via BOOTP

Under the EtherNet/IP menu item, you will find the input mask for activating or deactivating the BootP functionality. BootP address assignment is set to "OFF" by default.

↳ *To activate BootP, select* ON.

Provided the BootP server supplies the corresponding addresses, the address fields for IP address, network mask and gateway address are preset by the BootP server.

Notice!

The data can be called up via the display in the main menu under Network information.

Deactivating parameter enabling

↳ *To deactivate parameter enabling, select the* OFF *menu item in the* Parameter -> Parameter handling -> Parameter enable *menu.*

Configuring the participant (up to software version 20.00).

In the RSLogix 5000 configuration tool for EtherNet/IP, a so-called "Generic EtherNet Module" is created for the AMS 358*i* under the "Communication" path.

The input mask for the Generic Module describes:

- The name of the participant (can be selected freely; e.g., AMS358i_1).
- The format of the I/O data (Data - DINT = 32 bit).
- The IP address of the participant.
- The address and length of the input assembly (instance 1; 1 x 32 bit for the default input assembly of the measured-value data).
- The address and length of the output assembly (instance 120; 2 x 32 bit for the default output assembly).
- Optional: The address and length of the configuration assembly (instance 190; 102 x 8 bit).

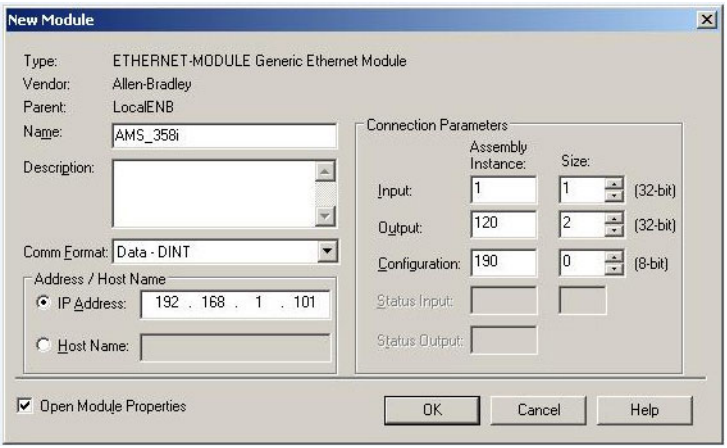

Figure 3.2: Input mask generic module

Attention!

If the configuration assembly is addressed with instance 190 and length 102 in the input mask for the generic module, all AMS 358i parameters with the value 0 are occupied in the first moment. All default parameters of the AMS manual must be entered in the configuration assembly. Changing the individual default values is possible at any time.

For the exact description of the assemblies for input/output and configuration, please refer to chapter 9.10.

The query cycle of the input and output assemblies is subsequently defined in the "Module Properties - Connection" path in the "Request Packet interval (RPI)" input field.

The participant is thereby defined in offline mode; the data must subsequently be transferred to the control.

Transfer the data to the control (RSLogix 5000 specific)

↳ *Activate online mode.*

- *Select the EtherNet communication port.*
- *Select the processor onto which the project is to be transferred.*
- *Set the control to "PROG".*
- *Start the download.*
- *Set the control to "RUN".*

Configure the config assembly

The AMS 358*i* makes available a configuration assembly that allows the entire parameter set of the AMS 358*i* to be saved in the control and, if necessary, to be called up.

The config assembly must include all parameters that affect the AMS 358*i*. The config assembly is automatically written to the connected participants in cycles that the control manufacturer defines.

The config assembly is implemented in class 4, under instance 190. By default, all parameters are preset to the value 0 (zero).

Attention!

If the config assembly is not adapted, the AMS 358i displays a corresponding behavior acc. to the parameters preset with 0.

- *Switch the control to offline mode.*
- *Double-click* `Controller Tags` *to edit the configuration assembly.*

The configuration assembly can be recognized by the index "C" appended to the device name.

Parameter entry is performed as described in *chapter 9.10.1.5*.

Attention!

Activation of the config assembly as described above necessitates value entry in the corresponding parameter memory locations. When using the configuration assembly, the default parameters must also be entered in the corresponding memory locations (see also chapter 9.10.1.5.).

After all of the parameters relevant to the AMS 358*i* are entered, the control is switched to "online" and the project is downloaded again.

Using explicit messaging services

Explicit messaging services (e.g., "get attributes …, set attribute …, and others) can be used to acyclically access all data of the AMS 358*i*

Attention!

If parameters are changed via explicit messaging services while simultaneously activating a configuration assembly, the changed parameters must subsequently be entered in the configuration assembly.

4 Specifications

4.1 Specifications of the laser measurement system

4.1.1 General specifications AMS 358*i*

Measurement data	AMS 358*i* 40 (H)	AMS 358*i* 120 (H)	AMS 358*i* 200 (H)	AMS 358*i* 300 (H)
Measurement range	0.2 … 40 m	0.2 … 120 m	0.2 … 200 m	0.2 … 300 m
Accuracy	± 2 mm	± 2 mm	± 3 mm	± 5 mm
Consistency [1]	0.3 mm	0.5 mm	0.7 mm	1.0 mm
Light spot diameter	≤ 40 mm	≤ 100 mm	≤ 150 mm	≤ 225 mm
Measurement value output	1.7 ms			
Integration time	8 ms			
Resolution	adjustable, see chapter of the individual interfaces			
Temperature drift	≤ 0.1 mm/K			
Ambient temperature sensitivity	1 ppm/K			
Air pressure sensitivity	0.3 ppm/hPa			
Traverse rate	≤ 10 m/s			
Electrical data				
Supply voltage Vin [2]	18 … 30 VDC			
Current consumption	without device heating: ≤ 250 mA / 24 VDC with device heating: ≤ 500 mA / 24 VDC			
Optical data				
Transmitter	laser diode, red light, wavelength 650 … 690 nm			
Laser class	2 acc. to EN 60825-1, CDRH			
Interfaces				
Ethernet/IP	10/100 Mbit/s			
Vendor ID	524_{Dec} / $20C_H$			
Device type	34_{Dec} / 22_H (encoder)			
Position sensor type	8_{Dec} / 8_H (absolute encoder)			
Operating and display elements				
Keyboard	4 buttons			
Display	monochromatic graphical display, 128 x 64 pixels			
LED	4 LEDs, 2 of which are used to display the Ethernet/IP connection			

Inputs/outputs	
Quantity	2, programmable
Input	protected against polarity reversal
Output	max. 60 mA, short-circuit proof
Mechanical data	
Housing	cast zinc and aluminum
Optics	glass
Weight	approx. 2.45 kg
Protection class	IP 65 acc. to EN 60529 [3]
Environmental conditions	
Operating temperature	
without device heating	-5 °C … +50 °C
with device heating	-30 °C … +50 °C [4]
Storage temperature	-30 °C … +70 °C
Air humidity	max. 90 % rel. humidity, non-condensing
Mechanical/electrical loading capacity	
Vibrations	acc. to EN 60068-2-6
Noise	acc. to EN 60060-2-64
Shock	acc. to EN 60068-2-27
EMC	acc. to EN 61000-6-2 and EN 61000-6-4 [5]

1) Statistical error: 1 sigma; minimum switch-on time: 2 min.
2) For UL applications: only for use in "Class 2" circuits acc. to NEC.
3) With screwed-on M12 plugs or mounted caps.
4) With devices with heating, the switch on/off area of the internal heating can be extended to prevent condensation from forming. A 100% prevention of the formation of condensation cannot be guaranteed due to the limited heating capacity of the AMS 358*i*.
5) This is a Class A product. In a domestic environment this product may cause radio interference, in which case the operator may be required to take adequate measures.

The AMS 358*i* is designed in accordance with safety class III for supply with PELV (protective extra-low voltage).

4.1.2 Dimensioned drawing AMS 358*i*

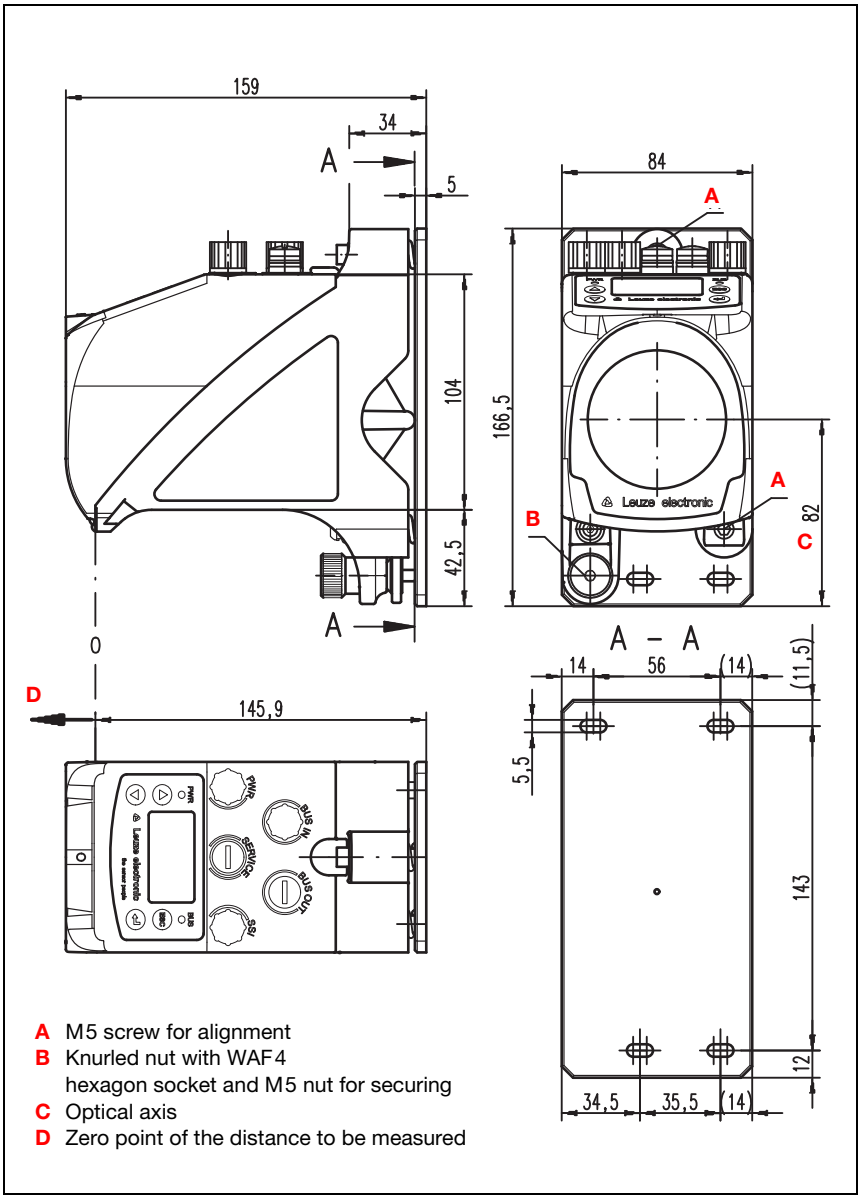

Figure 4.1: Dimensioned drawing AMS 358*i*

4.1.3 Type overview AMS 358*i*

AMS 358i (EtherNet/IP)

Type designation	Description	Part no.
AMS 358*i* 40	40 m operating range, EtherNet/IP interface	50113725
AMS 358*i* 120	120 m operating range, EtherNet/IP interface	50113726
AMS 358*i* 200	200 m operating range, EtherNet/IP interface	50113727
AMS 358*i* 300	300 m operating range, EtherNet/IP interface	50113728
AMS 358*i* 40 H	40 m operating range, EtherNet/IP interface, integrated heating	50113729
AMS 358*i* 120 H	120 m operating range, EtherNet/IP interface, integrated heating	50113730
AMS 358*i* 200 H	200 m operating range, EtherNet/IP interface, integrated heating	50113731
AMS 358*i* 300 H	300 m operating range, EtherNet/IP interface, integrated heating	50113732

Table 4.1: Type overview AMS 358*i*

5 Installation and mounting

5.1 Storage, transportation

Attention!

When transporting or storing, package the device so that it is protected against collision and humidity. Optimum protection is achieved when using the original packaging. Heed the required environmental conditions specified in the technical data.

Unpacking

- *Check the packaging for any damage. If damage is found, notify the post office or shipping agent as well as the supplier.*
- *Check the delivery contents using your order and the delivery papers:*
  - Delivered quantity
  - Device type and model as indicated on the nameplate
  - Brief manual

The name plate provides information as to what AMS 358*i* type your device is. For specific information, please refer to chapter 11.2.

Name plates

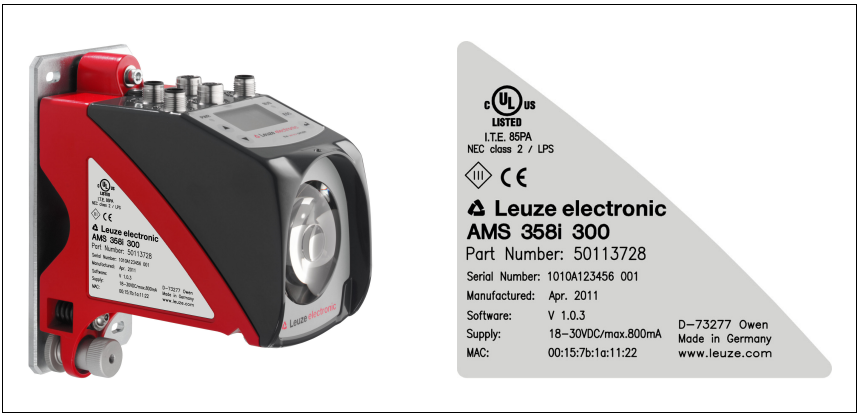

Figure 5.1: Device name plate using the AMS 300*i* as an example

Notice!

Please note that the shown name plate is for illustration purposes only; the contents do not correspond to the original.

- *Save the original packaging for later storage or shipping.*

If you have any questions concerning your shipment, please contact your supplier or your local Leuze electronic sales office.

Observe the applicable local regulations when disposing of the packaging materials.

5.2 Mounting the AMS 358*i*

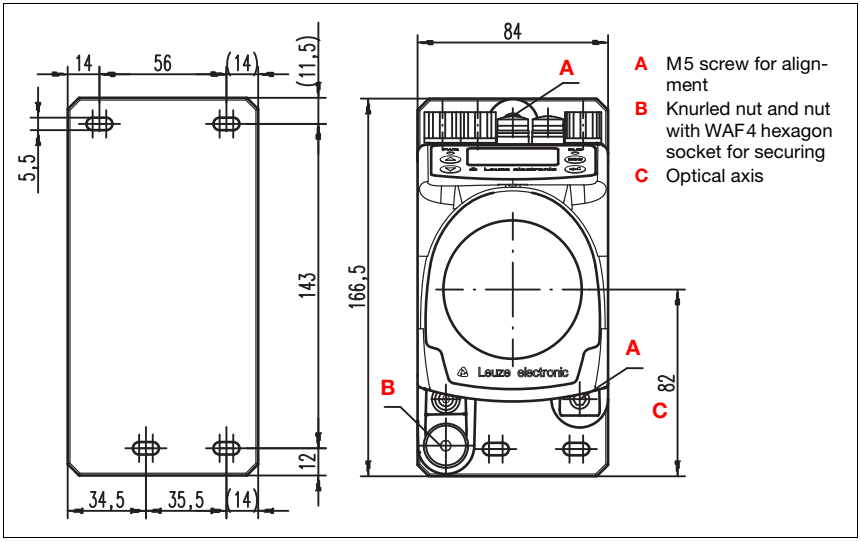

Figure 5.2: Mounting the device

The AMS 358*i* and the corresponding reflector are mounted on two mutually opposing, plane-parallel, flat walls or system parts. For error-free position measurement, there must be an unobstructed line-of-sight connection between the AMS 358*i* and the reflector.

Use M5 screws to fasten the laser measurement system. Secure the screws with a toothed lock washer to protect against loosening caused by vibrations.

Aligning the laser light spot in the center of the reflector

The laser light spot has to be aligned so that it always hits the center of the opposing reflector, both at close range as well as at the maximum measurement distance. **To align, use the two M5 Allen screws** ("**A**" in figure 5.2). When aligning please ensure that the knurled nut and the lock nut ("**B**" in figure 5.2) are opened wide.

Attention!

To prevent the laser measurement system from moving out of alignment during continuous operation, subsequently hand-tighten the knurled nut and counterlock with the nut with WAF4 hexagon socket ("B" in figure 5.2). Knurled nut and nut must not be tightened until alignment has been completed.

Attention!

The device must not be opened. Failure to comply will render the guarantee void. Warranted features cannot be guaranteed after the device has been opened.

5.2.1 Optional mounting bracket

A mounting bracket for mounting the AMS 358*i* on a flat, horizontal surface is available as an optional accessory.

Type designation:	MW OMS/AMS 01
Part no.:	50107255

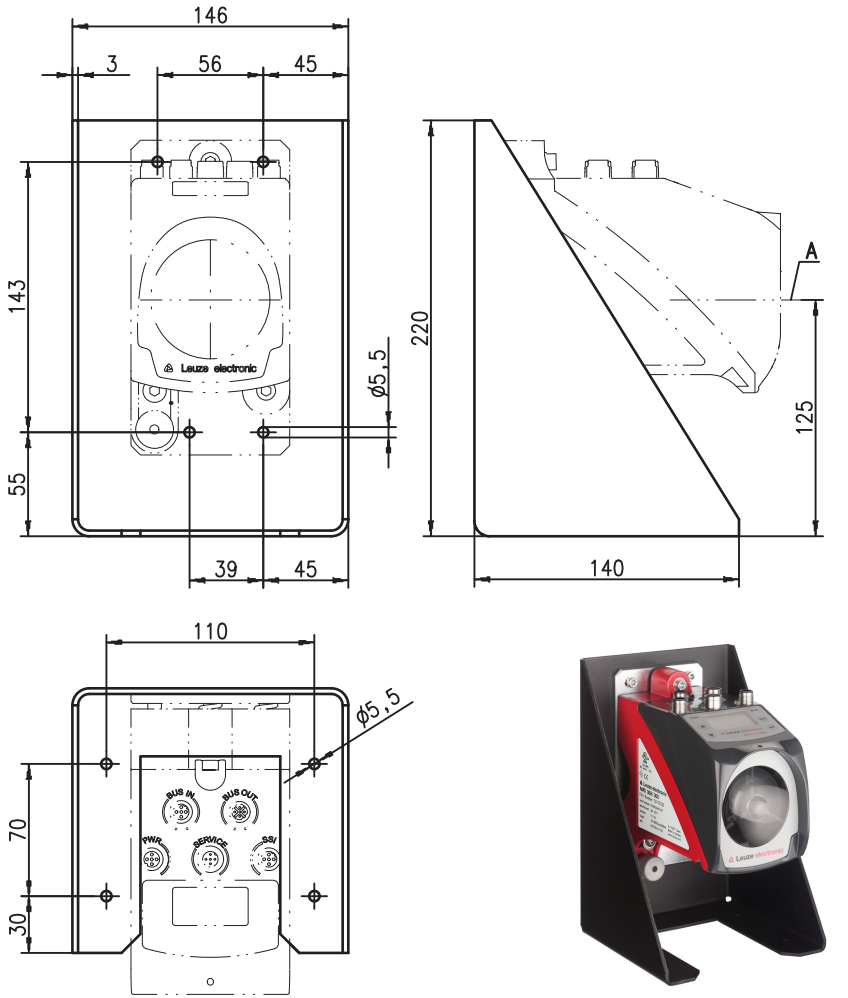

A Laser beam

Figure 5.3: Optional mounting bracket

5.2.2 Parallel mounting of the AMS 358*i*

Definition of the term "parallel spacing"

As shown in figure 5.4, dimension X describes the "parallel spacing" of the inner edges of the two laser light spots on the reflector.

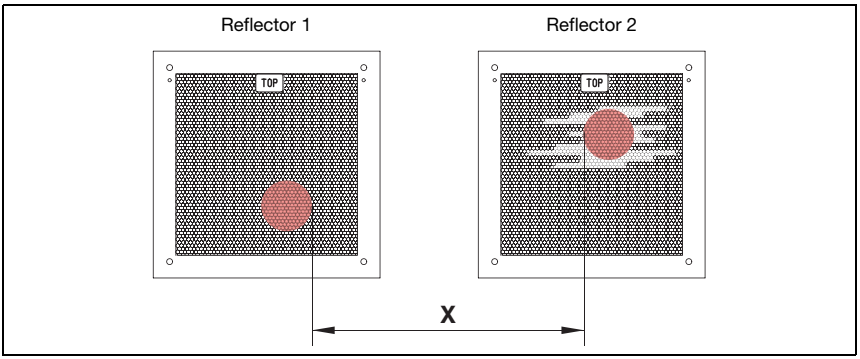

Figure 5.4: Minimum parallel spacing X between adjacent AMS 358*i*

The diameter of the light spot increases with distance.

	AMS 358*i* 40 (H)	AMS 358*i* 120 (H)	AMS 358*i* 200 (H)	AMS 358*i* 300 (H)
Max. measurement distance	40 m	120 m	200 m	300 m
Light spot diameter	≤ 40 mm	≤ 100 mm	≤ 150 mm	≤ 225 mm

Thus, the center-to-center spacing of the two AMS 358*i* devices with respect to one another can be calculated as a function of the maximum measurement distance.

To define the minimum parallel spacing between two AMS 358*i*, it is necessary to distinguish between three different arrangements of AMS 358*i* and reflectors.

The AMS 358*i* are mounted stationary and in parallel on one plane. Both reflectors move independently of one another at different distances to the AMS 358*i*.

Minimum parallel spacing X of the two laser light spots:

X = 100 mm + (max. measurement distance in mm x 0.01)

The AMS 358*i* are mounted stationary and in parallel on one plane. Both reflectors move in parallel at the same distance to the AMS 358*i*.

Measurement distance **up to 120 m**: minimum parallel spacing **X ≥ 600 mm**

Measurement distance **up to 200 m**: minimum parallel spacing **X ≥ 750 mm**

Measurement distance **up to 300 m**: minimum parallel spacing **X ≥ 750 mm**

The reflectors are mounted stationary and in parallel on one plane.
Both AMS 358*i* move independently of one another at different or the same distances to the reflectors.

Measurement distance **up to 120 m**: minimum parallel spacing **X ≥ 600 mm**

Measurement distance **up to 200 m**: minimum parallel spacing **X ≥ 750 mm**

Measurement distance **up to 300 m**: minimum parallel spacing **X ≥ 750 mm**

Notice!

*Please note that when the AMS 358*i* are mounted in a mobile manner, travel tolerances could cause the two laser light spots to move towards each other.*
*Take the travel tolerances of the vehicle into account when defining the parallel spacing of adjacent AMS 358*i*.*

5.2.3 Parallel mounting of AMS 358*i* and DDLS optical data transmission

The optical data transceivers of the DDLS series and the AMS 358*i* do not interfere with one another. Depending on the size of the used reflector, the DDLS can be mounted with a minimum parallel spacing of 100 mm to the AMS 358*i*. The parallel spacing is independent of the distance.

5.3 Mounting the AMS 358*i* with laser beam deflector unit

General information

The two available deflector units are used for the 90° deflection of the laser beam, see "Accessory deflector unit" on page 100.

Attention!

The deflector units are designed for a maximum range of 40 m.
Longer distances on request.

5.3.1 Mounting the laser beam deflector unit With integrated mounting bracket

The AMS 358*i* is screwed onto the mechanism of the US AMS 01 deflector unit. The mirror can be mounted for three deflection directions:

1. Upward beam deflection
2. Beam deflection to the left
3. Beam deflection to the right

The deflector unit is mounted on plane-parallel, flat walls or plant components. For error-free position measurement, there must be an interruption-free line-of-sight between the AMS 358*i*… and the deflection mirror as well as between the mirror and the reflector.

Use the M5 screws to mount the deflector unit. Secure the screws with a toothed lock washer to protect against loosening caused by vibrations.

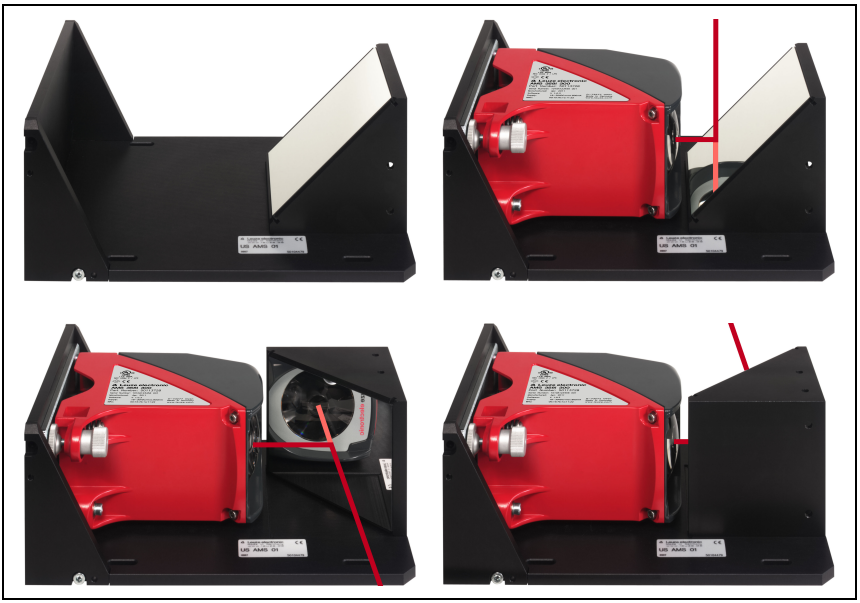

Figure 5.5: Mounting variants of the US AMS 01 laser beam deflector unit

5.3.2 Dimensioned drawing of US AMS 01 deflector unit

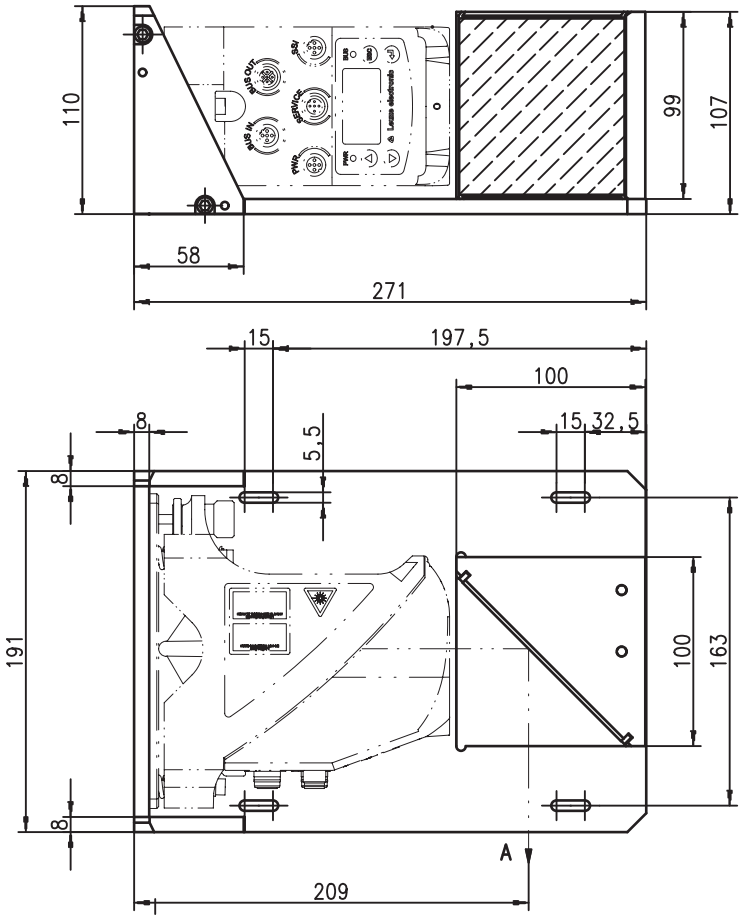

A Laser beam

Figure 5.6: Dimensioned drawing of US AMS 01 deflector unit

5.3.3 Mounting the US 1 OMS deflector unit without mounting bracket

The US 1 OMS deflector unit and the AMS 358*i* are mounted separately.

Notice!

When mounting, make certain that the laser light spot of the AMS 358i is aligned in the center of the deflection mirror.

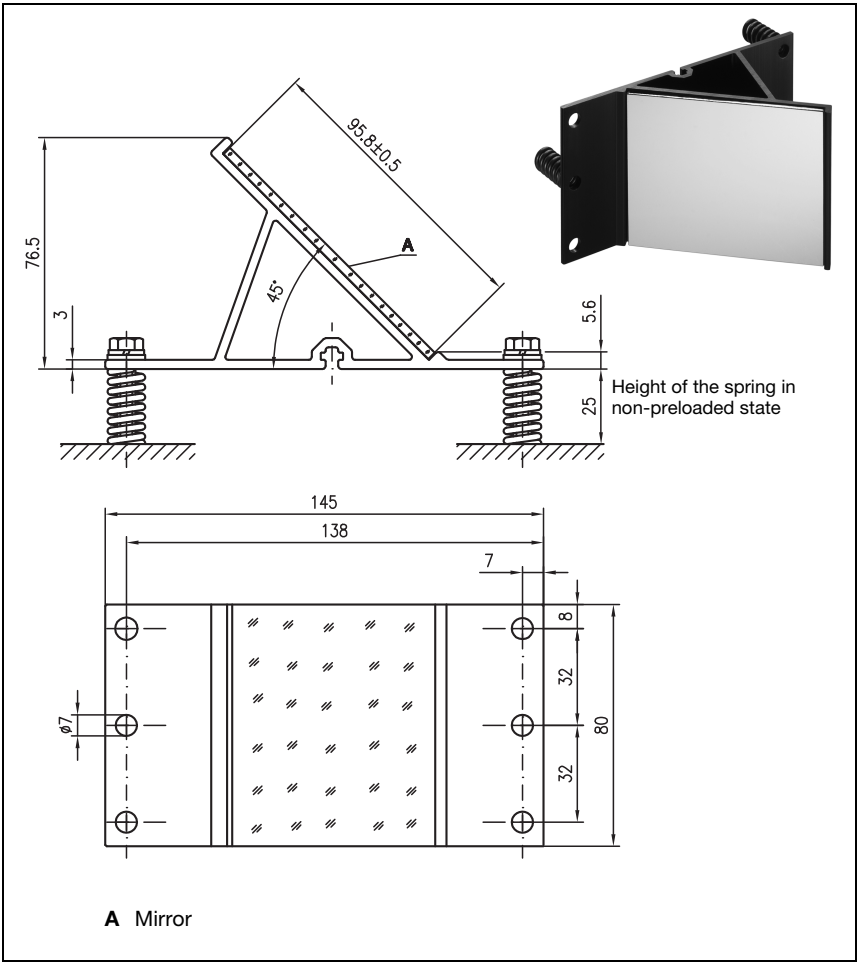

Figure 5.7: Photo and dimensioned drawing of the US 1 OMS deflector unit

Alignment of the laser light spot on the reflector is performed as described in chapter 5.2.

6 Reflectors

6.1 General information

The AMS 358*i* measures distances against a reflective tape specified by Leuze electronic. All provided specifications for the AMS 358*i*, such as the operating range or accuracy, can only be achieved with the reflective tape specified by Leuze electronic.

The reflective tapes are available as adhesive tapes, affixed to a metal plate and with an integrated heater especially for use at low temperatures. Reflective tapes with heating have the designation "**Reflective tape ...x...-H**", where "**H**" is an abbreviation for the heating variant.

The reflective tapes/reflectors must be ordered separately. The choice of size is left to the user. In chapter 6.3, recommendations on reflector size are provided as a function of the distance that is to be measured. In any case, the user must check to determine whether the recommendation is suitable for the respective application.

6.2 Description of the reflective tape

The reflective tape consists of a white, microprism-based reflective material. The microprisms are protected with a highly transparent, hard protective layer.

Under certain circumstances, the protective layer may lead to surface reflections. The surface reflections can be directed past the AMS 358*i* by positioning the reflective tape at a slight incline. The inclination of the reflective tape/reflectors is described in chapter 6.4.2. The required pitch can be found in table 6.1 "Reflector pitch resulting from spacer sleeves" on page 39.

The reflective tapes are provided with a protective foil that can easily be pulled off. This must be removed from the reflector before the complete system is put into operation.

6.2.1 Specifications of the self-adhesive foil

	Part		
Type designation	**Reflective tape 200x200-S**	**Reflective tape 500x500-S**	**Reflective tape 914x914-S**
Part no.	50104361	50104362	50108988
Foil size	200x200mm	500x500mm	914x914mm
Recommended application temperature for adhesive tape	+5°C … +25°C		
Temperature resistance, affixed	-40°C … +80°C		
Mounting surface	The mounting surface must be clean, dry and free of grease.		
Cutting the tape	Cut with a sharp tool, always on the side of the prism structure.		
Cleaning	Do not use any agents that act with a grinding effect. A conventional household detergent can be used as a cleaning agent. Rinse with clear water and dry the surface.		
Storing the foil	Store in a cool and dry place.		

6.2.2 Specifications of the reflective tape on a metal plate

The reflective tape is affixed to a metal plate. Included with the metal plate are spacers for positioning at an incline - for avoiding surface reflections - (see chapter 6.4.2 "Mounting the reflector").

	Part		
Type designation	**Reflective tape 200x200-M**	**Reflective tape 500x500-M**	**Reflective tape 914x914-M**
Part no.	50104364	50104365	50104366
Foil size	200x200mm	500x500mm	914x914mm
Outer dimensions of the metal plate	250x250mm	550x550mm	964x964mm
Weight	0.8kg	4kg	25kg
Cleaning	Do not use any agents that act with a grinding effect. A conventional household detergent can be used as a cleaning agent. Rinse with clear water and dry the surface.		
Storing the reflector	Store in a cool and dry place.		

6.2.3 Dimensioned drawing of reflective tape on a metal plate

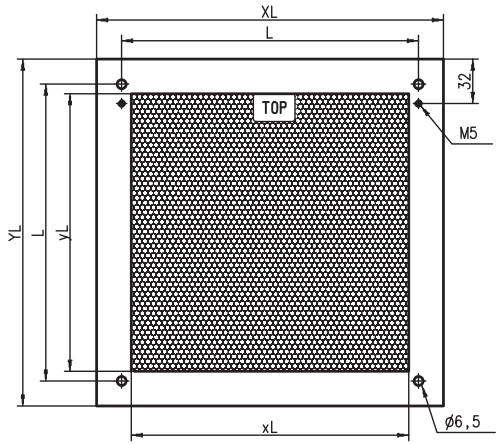

Always align the **TOP** marking with the AMS connections! (chapter 6.4.2)

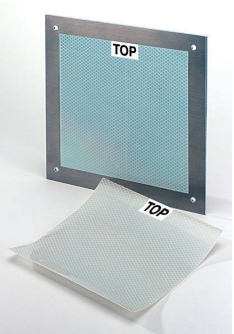

Figure 6.1: Dimensioned drawing of reflectors

Part	Reflective tape (mm)		Reflector plate (mm)		
	xL	yL	XL	YL	L
Reflective tape 200x200-M	200	200	250	250	214
Reflective tape 500x500-M	500	500	550	550	514
Reflective tape 914x914-M	914	914	964	964	928

6.2.4 Specifications of heated reflectors

The reflective tape is affixed to a heated, thermally insulated base. The insulation results in a very high energetic efficiency.

Only the reflective tape is kept at the specified temperature by the integrated heater. Through the insulation on the back, the generated heat cannot be transferred via the steel construction. Energy costs are greatly reduced in the case of continuous heating.

	Part		
Type designation	**Reflective tape 200x200-H**	**Reflective tape 500x500-H**	**Reflective tape 914x914-H**
Part no.	50115020	50115021	50115022
Voltage supply	230VAC		
Power	100W	600W	1800W
Current consumption	~ 0.5A	~ 3A	~ 8A
Length of the supply line	2 m		
Size of the reflective tape	200x200mm	500x500mm	914x914mm
Outer dimensions of the base material	250x250mm	550x550mm	964x964mm
Weight	0.5kg	2.5kg	12kg
Temperature control	Controlled heating with the following switch-on and switch-off temperatures, measured at the reflector surface.		
Switch-on temperature	~ 5°C		
Switch-off temperature	~ 20°C		
Operating temperature	-30°C … +70°C		
Storage temperature	-40°C … +80°C		
Air humidity	Max. 90%, non-condensing.		
Cleaning	Do not use any agents that act with a grinding effect. A conventional household detergent can be used as a cleaning agent. Rinse with clear water and dry the surface.		
Storing the reflector	Store in a cool and dry place.		

6.2.5 Dimensioned drawing of heated reflectors

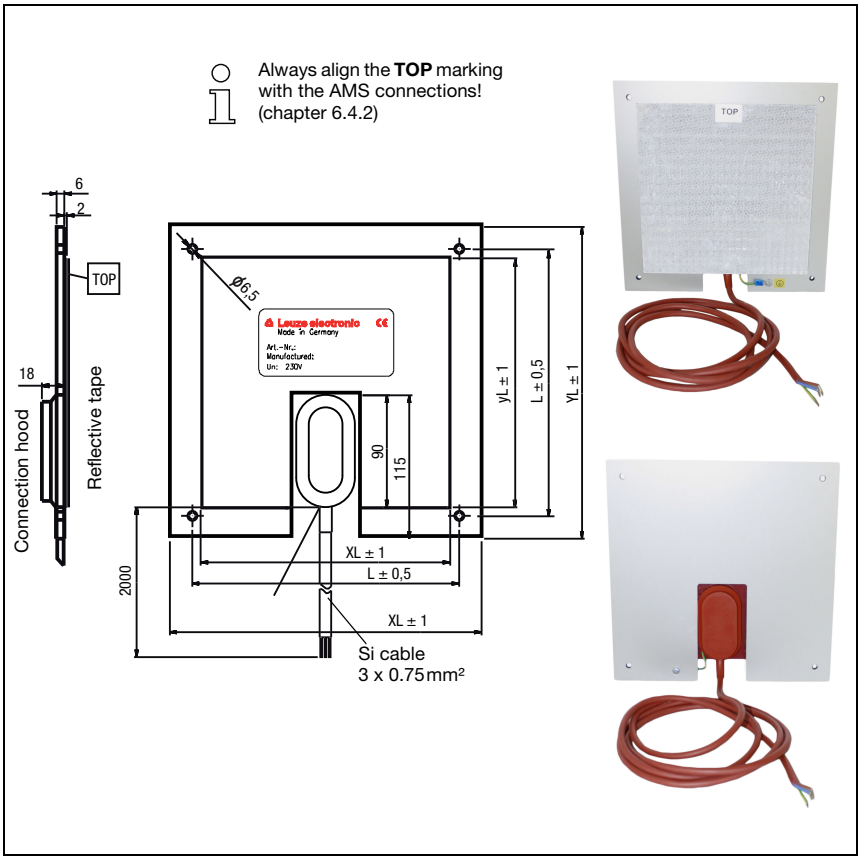

Figure 6.2: Dimensioned drawing of heated reflectors

Part	Reflective tape (mm)		Insulated base plate (mm)		
	xL	yL	XL	YL	L
Reflective tape 200x200-H	200	200	250	250	214
Reflective tape 500x500-H	500	500	550	550	514
Reflective tape 914x914-H	914	914	964	964	928

6.3 Selecting reflector sizes

Depending on system design, the reflector can be mounted so that it travels on the vehicle or it can be mounted at a fixed location.

Attention!

The reflector sizes shown below are a recommendation from Leuze electronic for on-vehicle mounting of the AMS 358i. For stationary mounting of the AMS 358i, a smaller reflector is generally sufficient for all measurement distances.
On the basis of the system planning and design, always check whether mechanical travel tolerances may require the use of a reflector larger than that which is recommended. This applies, in particular, when the laser measurement system is mounted on a vehicle. During travel, the laser beam must reach the reflector without interruption. For on-vehicle mounting of the AMS 358i, the reflector size must accommodate any travel tolerances that may arise and the associated "wandering" of the light spot on the reflector.

Overview of reflector types

Recommended reflector sizes			
AMS 358*i* selection (Operating range in m)	**Recommended reflector size (H x W)**	**Type designation …-S = Self-adhesive …-M = metal plate …-H = heating**	**Part no.**
AMS 358*i* 40 (**max. 40m**)	200x200mm	Reflective tape 200x200-S Reflective tape 200x200-M Reflective tape 200x200-H	50104361 50104364 50115020
AMS 358*i* 120 (**max. 120m**)	500x500mm	Reflective tape 500x500-S Reflective tape 500x500-M Reflective tape 500x500-H	50104362 50104365 50115021
AMS 358*i* 200 (**max. 200m**)	749x914mm 914x914mm	Reflective tape 749x914-S Reflective tape 914x914-M Reflective tape 914x914-S Reflective tape 914x914-H	50104363 50104366 50108988 50115022
AMS 358*i* 300 (**max. 300m**)	749x914mm 914x914mm	Reflective tape 749x914-S Reflective tape 914x914-M Reflective tape 914x914-S Reflective tape 914x914-H	50104363 50104366 50108988 50115022

6.4 Mounting the reflector

6.4.1 General information

Self-adhesive reflective tapes

The reflective tapes of the "Reflective tape …x…**-S**" self-adhesive series must be affixed to a flat, clean and grease-free surface. We recommend using a separate metal plate, which is to be provided on-site.

As described in table 6.1, the reflective tape must be angled.

Reflective tapes on metal

The reflective tapes of the "Reflective tape …x…**-M**" series are provided with corresponding mounting holes. Spacer sleeves are provided in the packet for achieving the necessary pitch angle. For further information see table 6.1.

Heated reflectors

The reflective tapes of the "Reflective tape ...x...**-H**" series are provided with corresponding mounting holes. Due to the voltage supply affixed on the rear, the reflector cannot be mounted flat. Included in the package are four distance sleeves in two different lengths. Use the distance sleeves to achieve a base separation to the wall as well as the necessary pitch for avoiding surface reflection. For further information see table 6.1.

The reflector is provided with a 2m-long connection cable for supplying with 230VAC. Connect the cable to the closest power outlet. Observe the current consumptions listed in the specifications.

Attention!

Connection work must be carried out by a certified electrician.

6.4.2 Mounting the reflector

The combination of laser measurement system and reflective tape/reflector is mounted so that the laser light spot hits the tape as centered as possible and without interruption.

For this purpose, use the alignment elements provided on the AMS 358*i*… (see chapter 5.2 "Mounting the AMS 358i"). If necessary, remove the protective foil from the reflector.

Attention!

The "TOP" label mounted on the reflectors should be aligned the same as the connections of the AMS 358*i*.

Example:

If the AMS 358i is mounted so that the M12 connections are on the top, the "TOP" label of the reflector is also on the top. If the AMS 358i is mounted so that the M12 connections are on the side, the "TOP" label of the reflector is also on the side.

Notice!

The reflector must be angled. To do this, use the spacer sleeves. Angle the reflectors so that the ***surface reflections of the foil seal are deflected to the left, right or upwards****, chapter 6.4.3 gives the correct pitch with respect to the reflector size and, thus, the length of the spacers.*

Reflective tapes …-S and …-M

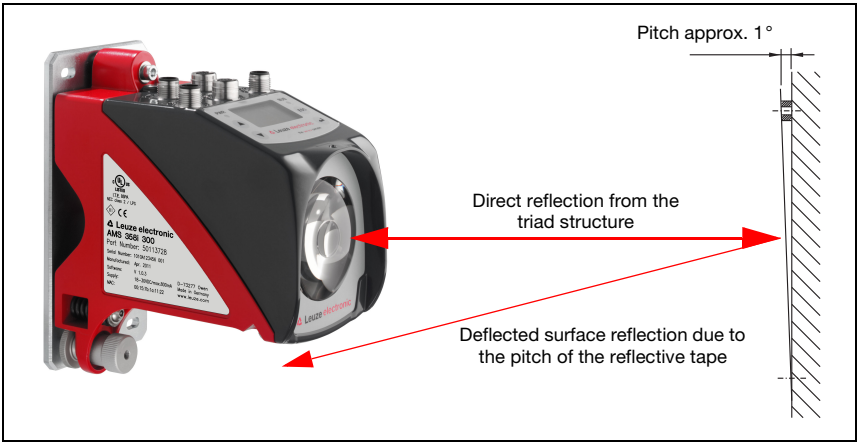

Figure 6.3: Reflector mounting

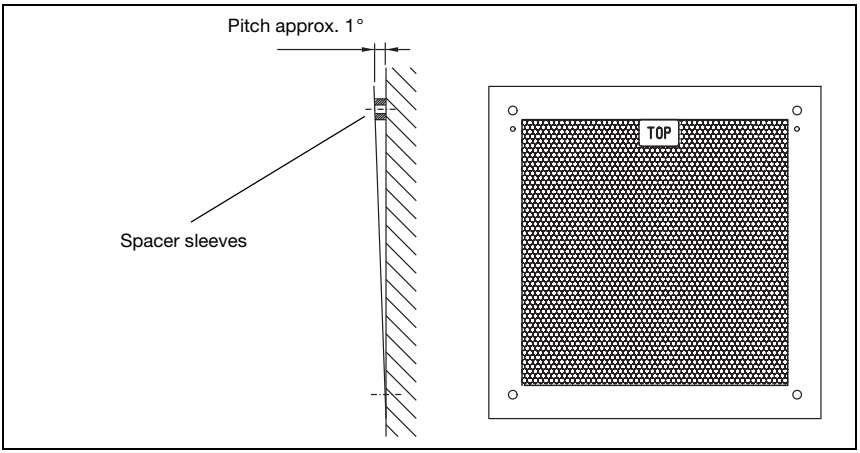

Figure 6.4: Pitch of the reflector

Reflective tapes …-H

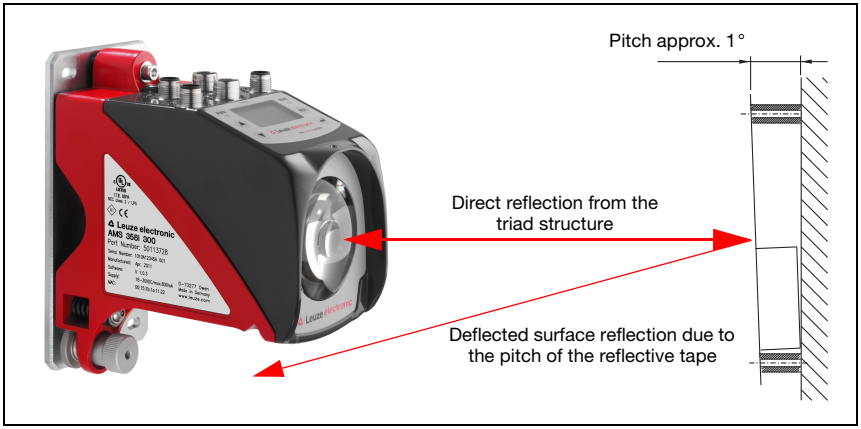

Figure 6.5: Mounting of heated reflectors

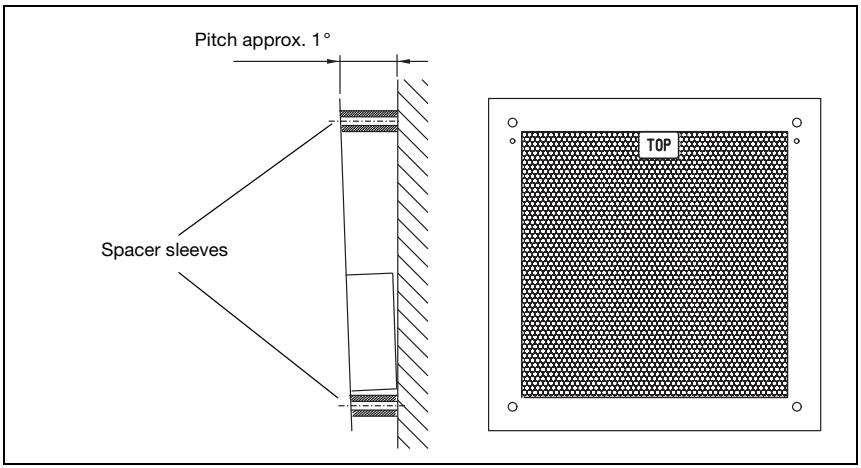

Figure 6.6: Pitch of the heated reflector

6.4.3 Table of reflector pitches

Reflector type	Pitch resulting from spacer sleeves [1]	
Reflective tape 200x200-S Reflective tape 200x200-M	**2 x 5mm**	
Reflective tape 200x200-H	**2 x 15mm**	**2 x 20mm**
Reflective tape 500x500-S Reflective tape 500x500-M	**2 x 10mm**	
Reflective tape 500x500-H	**2 x 15mm**	**2 x 25mm**
Reflective tape 749x914-S	**2 x 20mm**	
Reflective tape 914x914-S Reflective tape 914x914-M	**2 x 20mm**	
Reflective tape 914x914-H	**2 x 15mm**	**2 x 35mm**

1) Spacer sleeves are included in the delivery contents of reflective tape …-**M** and …-**H**

Table 6.1: Reflector pitch resulting from spacer sleeves

Notice!

Reliable function of the AMS 358i and, thus, max. operating range and accuracy can only be achieved with the reflective tape specified by Leuze electronic. No function can be guaranteed if other reflectors are used!

7 Electrical connection

The AMS 358*i* laser measurement systems are connected using variously coded M12 connectors. This ensures unique connection assignments.

Notice!

The corresponding mating connectors and ready-made cables are available as accessories for all cables. For further information, see chapter 11 "Type overview and accessories".

Figure 7.1: Connections of the AMS 358*i*

7.1 Safety notices for the electrical connection

Attention!

Before connecting the device, be sure that the supply voltage agrees with the value printed on the name plate.
The device may only be connected by a qualified electrician.
Ensure that the functional earth (FE) is connected correctly. Unimpaired operation is only guaranteed when the functional earth is connected properly.
If faults cannot be corrected, the device should be removed from operation and protected against possible use.

Attention!

For UL applications, use is permitted exclusively in Class 2 circuits according to NEC (National Electric Code).

The laser measurement systems are designed in accordance with safety class III for supply by PELV (protective extra-low voltage with reliable disconnection).

Notice!

Protection class IP65 is achieved only if the connectors and caps are screwed into place!

Described in detail in the following are the individual connections and pin assignments.

7.2 PWR – voltage supply / switching input/output

PWR (5-pin plug, A-coded)			
PWR	**Pin**	**Name**	**Remark**
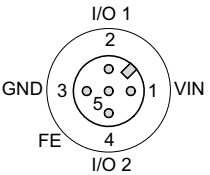	1	VIN	Positive supply voltage +18 … +30VDC
	2	I/O 1	Switching input/output 1
	3	GND	Negative supply voltage 0VDC
	4	I/O 2	Switching input/output 2
	5	FE	Functional earth
	Thread	FE	Functional earth (housing)

M12 plug (A-coded)

Table 7.1: Pin assignment PWR

Further information on configuring the input/output can be found in chapter 8 and chapter 9.

7.3 EtherNet/IP BUS IN

BUS IN (4-pin socket, D-coded)			
BUS IN	**Pin**	**Name**	**Remark**
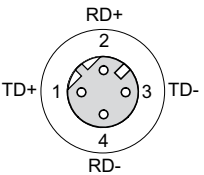	1	TD+	Transmit Data +
	2	RD+	Receive Data +
	3	TD-	Transmit Data -
	4	RD-	Receive Data -
	Thread	FE	Functional earth (housing)

M12 socket (D-coded)

Table 7.2: Pin assignments for BUS IN

7.4 EtherNet/IP BUS OUT

BUS OUT (4-pin socket, D-coded)			
BUS OUT 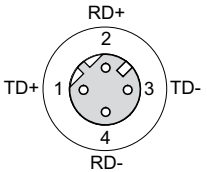 **M12 socket (D-coded)**	**Pin**	**Name**	**Remark**
	1	TD+	Transmit Data +
	2	RD+	Receive Data +
	3	TD-	Transmit Data -
	4	RD-	Receive Data -
	Thread	FE	Functional earth (housing)

Table 7.3: Pin assignment BUS OUT

7.5 Service

Service (5-pin socket, A-coded)			
SERVICE 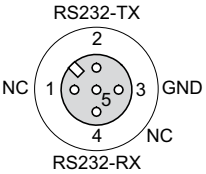 **M12 socket (A-coded)**	**Pin**	**Name**	**Remark**
	1	NC	Not used
	2	RS232-TX	Transmission line RS 232/service data
	3	GND	Voltage supply 0VDC
	4	RS232-RX	Receiving line RS 232/service data
	5	NC	Not used
	Thread	FE	Functional earth (housing)

Table 7.4: Service pin assignments

Notice!

The service interface is designed only for use by Leuze electronic!

8 Display and control panel AMS 358*i*

8.1 Structure of the control panel

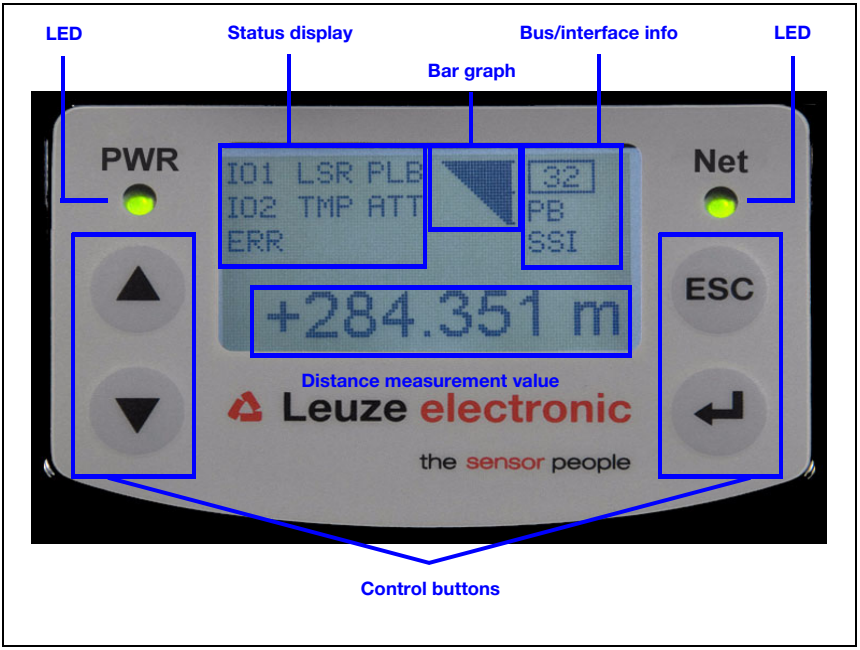

Figure 8.1: Structure of the control panel using the AMS 304*i* PROFIBUS device variant as an example

8.2 Status display and operation

8.2.1 Indicators in the display

Status and warning messages in the display

IO1 **Input 1 or output 1 active:**
Function depending on configuration.

IO2 **Input 2 or output 2 active:**
Function depending on configuration.

LSR **Warning - laser prefailure message:**
Laser diode old, device still functional, exchange or have repaired.

TMP **Warning - temperature monitoring:**
Permissible internal device temperature exceeded / not met.

PLB **Plausibility error:**
Implausible measurement value. Possible causes: light beam interruption, outside of measurement range, permissible internal device temperature considerably exceeded or traverse rate >10m/s.

Depending on the configuration, either zero or the last valid measurement value is output at the interfaces.

ATT **Warning received signal:**
Laser outlet window or reflector soiled or fogged by rain, water vapor or fog. Clean or dry surfaces.

ERR **Internal hardware error:**
The device must be sent in for inspection.

Bar graph

Indicates the **strength of the received laser light**.

The center bar represents the **ATT** warning threshold. The distance value remains valid and is output at the interfaces.

If no bar graph is available, the **PLB** status information appears at the same time.

The measurement value has thus been assessed as being implausible. Depending on the configuration, either zero or the last valid measurement value is output at the interfaces.

Interface info

An activated EtherNet/IP interface is indicated in the display by means of code "ENIP".

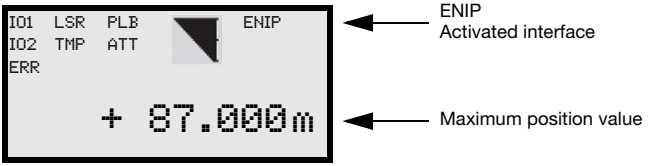

Maximum position value

The measured position value is displayed in the configured unit of measurement.

+87.000m With the **metric** setting, the measurement value is always displayed in meters with **three decimal places**.

+87.0in With the **inch** setting, the measurement value is always displayed in inches with **one decimal place**.

8.2.2 LED status displays

After power ON, a test of the Power LED and Net LED is performed in the following sequence:

1. LEDs off.
2. LEDs are switched to green for approx. 0.25 s.
3. LEDs are switched to red for approx. 0.25 s.
4. LEDs off.

This is followed by the status display for the power LED (see chapter 9.3) and the Net LED.

PWR LED

PWR	**Off**	**Device OFF** - No supply voltage
PWR	**Flashing green**	**Power LED flashes green** - LED function test for 0.25 s after power up - No measurement value output - Voltage connected - Self test running - Initialization running - Parameter download running - Boot process running
PWR	**Green continuous light**	**Power LED green** - AMS 358*i* ok - Measurement value output - Self test successfully finished - Device monitoring active
PWR	**Red flashing**	**Power LED flashes red** - LED function test for 0.25 s after power up - Device ok but warning message (ATT, TMP, LSR) set in display - Light beam interruption - Plausibility error (PLB)
PWR	**Red continuous light**	**Power LED red** - No measurement value output; for details, see Display

Net LED

Net	**Off**	**Net LED off** - No voltage supply - No IP address assigned (BootP, DHCP)
Net	**Flashing green**	**Net LED flashes green** - LED function test for 0.25 s after power up - No EtherNet/IP communication present - AMS 358*i* is not assigned to any master
Net	**Green continuous light**	**Net LED green** - AMS 358*i* bus communication ok
Net	**Red flashing**	**Net LED flashes red** - LED function test for 0.25 s after power up - Time-out in bus communication
Net	**Red continuous light**	**Net LED red** - Double IP address
Net	**Green/red flashing**	**Net LED flashes green/red** - Self test

LINK LED for BUS IN and BUS OUT

A green/yellow multicolor LED below the BUS IN and BUS OUT connectors indicates the EtherNet/IP connection status.

	Green continuous light	**LINK LED green** - The link exists, the hardware connection to the next connected participant is OK.
	Flashing yellow	**LINK LED flashes yellow** - Data is exchanged with the connected participants.

8.2.3 Control buttons

▲	**Up**	Navigate upward/laterally.
▼	**Down**	Navigate downward/laterally.
ESC	**ESC**	Exit menu item.
↵	**ENTER**	Confirm/enter value, change menu levels.

Navigating within the menus

The menus within a level are selected with the up/down buttons ▲ ▼.

The selected menu item is activated with the enter button ↵.
Press the ESC button ESC to move up one menu level.
When one of the buttons is actuated, the display illumination is activated for 10 min.

Setting values

If input of a value is possible, the display looks like this:

```
100
        <-I0123456789  save
    Default ---------------- unit
126          |    |
```

← + ↵	Delete character
0...9 + ↵	Enter digit
save + ↵	Save

Use the ▲ ▼ and ↵ buttons to set the desired value. An accidental, incorrect entry can be corrected by selecting <-I and then pressing ↵.
Then use the ▲ ▼ buttons to select Save and save the set value by pressing ↵.

Selecting options

If options can be selected, the display looks like this:

```
o OFF
  ON
   Default ---------------- unit
  OFF        |    |
```

Select the desired option with the ▲ ▼ buttons. Activate the option by pressing ↵.

8.3 Menu description

8.3.1 The main menus

After voltage has been applied to the laser, device information is displayed for several seconds. The display then shows the measurement window with all status information.

```
AMS 358i 120
Leuze electronic
          GmbH & Co. KG
SW: V 1.3.0   HW:1
SN: --------------
```

Device information - main menu

This menu item contains detailed information on
- Device model,
- Manufacturer,
- Software and hardware version,
- Serial number.

No entries can be made via the display.

```
Network information
Address:      ---.---.---.---
Net mask:     ---.---.---.---
Gateway:      ---.---.---.---
MAC ID:       --.--.--.--.--.--
```

Network information - main menu

- Display of the network settings.

No entries can be made via the display.

```
IO1  LSR  PLB          ENIP
IO2  TMP  ATT
ERR

      + 87.000m
```

Status and measurement data - main menu

- Display of status-, warning-, and error messages
- Status overview of the switching inputs/outputs.
- Bar graph for the reception level.
- Link.
- Measurement value.

No entries can be made via the display.
See "Indicators in the display" on page 43.

```
Parameter
  Parameter handling
  Ethernet/IP
  Maximum position value
  I/O
  Other
```

Parameter - main menu

- Configuration of the AMS.

See "Parameter menu" on page 49.

```
Language
selection
o Deutsch
o English
o Español
o Français
```

Language selection - main menu

- Selection of the display language.

See "Language selection menu" on page 52.

```
Service
  Status messages
  Diagnostics
  Expanded diagnostics
```

Service - main menu

- Display of status messages.
- Display of diagnostic data.

No entries can be made via the display.
See "Service menu" on page 53.

Notice!

***The rear cover** of this manual includes a **fold-out page** with the complete **menu structure**. It describes the menu items in brief.*

8.3.2 Parameter menu

Parameter handling submenu

The following functions can be called up in the Parameter handling submenu:

- Lock and enable parameter entry
- Set up a password
- Reset the AMS 358*i* to default settings.

Table 8.1: Parameter handling submenu

Level 3	Level 4	Level 5	Selection/configuration option Description	Standard
Parameter enabling			ON / OFF The standard setting (OFF) prevents unintended parameter changes. With parameter enabling activated (ON), the display is inverted. In this state, it is possible to change parameters manually.	OFF
Password	Activate password		ON / OFF To enter a password, parameter enabling must be activated. If a password is assigned, changes to the AMS 358*i* can only be made after the password is entered. The master password 2301 bridges the individually set password.	OFF
	Password entry		Configuration option of a four-digit numerical password	
Parameters to default			By pressing the enter button ↵ after selecting Parameters to default, all parameters are reset to their standard settings without any further security prompts. In this case, English is selected as the display language.	

Additional important information on parameter handling can be found at the end of the chapter.

EtherNet/IP submenu

Table 8.2: EtherNet/IP submenu

Level 3	Level 4	Level 5	Selection/configuration option Description	Standard
Activation			ON / OFF	
EtherNet interface	Address	Address	The IP address can be set to any value in the ---.---.---.--- format. Normally, the network administrator specifies the IP address that is to be set here. If DHCP is activated, the setting made here has no effect and the AMS 358*i* is set to the values that it obtains from the DHCP server.	
	Gateway		The gateway address can be set to any value in the ---.---.---.--- format. The AMS 358*i* communicates with participants in other subnets via the gateway. Splitting the read application over multiple subnets is rather uncommon; the setting of the gateway address, thus, usually has no meaning.	

Table 8.2: EtherNet/IP submenu

Level 3	Level 4	Level 5	Selection/configuration option Description	Standard
	Net mask		The net mask can be set to any value in the ---.---.---.--- format. Usually, the AMS 358*i* is used in a private Class C network and the default setting can be accepted without change. **Attention:** It is possible to enter any values for ---.---.---.--- . Only the values 255 or 000 are permissible for ---, however. If other values are set, an error message appears upon restart of the AMS 358*i*.	
	DHCP activated		ON / OFF If DHCP is activated, the AMS 358*i* draws its settings for IP address, gateway and net mask from a DHCP server. The manual settings made above have no effect, but are retained and are again active if DHCP is deactivated.	ON
	BootP activated		ON / OFF If BootP is activated, the AMS 358*i* draws its settings for IP address, gateway and net mask from a BootP server. The manual settings made above have no effect, but are retained and are again active if BootP is deactivated.	OFF

Position value submenu

Table 8.3: Position value submenu

Level 3	Level 4	Level 5	Selection/configuration option Description	Standard
Measurement unit			Metric/Inch Specifies the units of the measured distances	Metric
Count direction			Positive/Negative Positive: The measurement value begins at 0 and increases with increasing distance. Negative: The measurement value begins at 0 and decreases with increasing distance. Negative distance values may need to be compensated with an offset or preset.	Positive
Offset			Output value=measurement value+offset. The resolution of the offset value is independent of the selected "Resolution position" and is entered in mm or inch/100. The offset value is effective immediately following entry. If the preset value is activated, this has priority over the offset. Preset and offset are not offset against each other.	0 mm
Preset			The preset value is accepted by means of teach pulse. The teach pulse can be applied to a hardware input of the M12 PWR connector. The hardware input must be appropriately configured. See also configuration of the I/Os.	0 mm
Free resolution value			The measurement value can be resolved in increments of 1/1000 within the 5 … 50000 value range. If, e.g., a resolution of 0.875 mm per digit is required, the parameter is set to 875.	1000
Error delay			ON / OFF Specifies whether, in the event of an error, the position value immediately outputs the value of the "Position value in the case of error" parameter or the last valid position value for the configured error delay time.	ON/100 ms
Position value in the case of error			Last valid value / zero Specifies which position value is output after the error delay time elapses.	Zero

I/O submenu

Table 8.4: I/O submenu

Level 3	Level 4	Level 5	Selection/configuration option Description	Standard
I/O 1	Port configuration		Input/Output Defines whether I/O 1 functions as an output or input.	Output
	Switching input	Function	No function/preset teach/laser ON/OFF	No function
		Activation	Low active/High active	Low active
	Switching output	Function	Pos. limit value 1 / Pos. limit value 2 / Velocity / Intensity (ATT) / Temp. (TMP) / Laser (LSR) / Plausibility (PLB) / Hardware (ERR) The individual functions are "ORed" on the selected switching output.	Plausibility (PLB), hardware (ERR)
		Activation	Low active/High active	Low active
I/O 2	Port configuration		Input/Output Defines whether I/O 2 functions as an output or input.	Output
	Switching input	Function	No function/preset teach/laser ON/OFF	No function
		Activation	Low active/High active	Low active
	Switching output	Function	Pos. limit value 1 / Pos. limit value 2 / Velocity / Intensity (ATT) / Temp. (TMP) / Laser (LSR) / Plausibility (PLB) / Hardware (ERR) The individual functions are "ORed" on the selected switching output.	Intensity (ATT), Temp. (TMP), Laser (LSR)
		Activation	Low active/High active	Low active
Limit values	Upper pos. limit 1	Activation	ON / OFF	OFF
		Limit value input	Value input in mm or inch/100	0
	Lower pos. limit 1	Activation	ON / OFF	OFF
		Limit value input	Value input in mm or inch/100	0
	Upper pos. limit 2	Activation	ON / OFF	OFF
		Limit value input	Value input in mm or inch/100	0
	Lower pos. limit 2	Activation	ON / OFF	OFF
		Limit value input	Value input in mm or inch/100	0

Other submenu

Table 8.5: Other submenu

Level 3	Level 4	Level 5	Selection/configuration option Description	Standard
Heating control			Standard (10° C … 15° C)/Extended (30° C … 35°) Defines a switch-on/switch-off range for the heating control. The extended switch-on/switch-off range for heating may provide relief in the event of condensation problems. There is no guarantee that no condensation will occur on the optics in the extended switch-on/switch-off range due to the limited heating capacity. This parameter is available as standard, but functions only for devices with integrated heating (AMS 358*i*… **H**).	Standard
Display illumination			10 minutes/ON Display illumination is switched off after 10 minutes or, if the parameter is set to "ON", illumination is always on.	10 min.
Display contrast			Weak/Medium/Strong The display contrast may change at extreme temperature values. The contrast can subsequently be adapted using the three levels.	Medium
Service RS232	Baud rate		57.6 kbit/s / 115.2 kbit/s The service interface is only available to Leuze internally.	115.2 kbit/s
	Format		8,e,1 / 8,n,1 The service interface is only available to Leuze internally.	8,n,1

8.3.3 Language selection menu

```
Language
selection
o Deutsch
● English
o Español
o Français
```

There are 5 display languages available:

- German
- English
- Spanish
- French
- Italian

The AMS 358*i* is delivered from the factory with the display preset to English.

To change the language, no password needs to be entered nor must password enabling be activated. The display language is a passive operational control and is, thus, not a function parameter, per se.

8.3.4 Service menu

```
Service
 Status messages
 Diagnostics
 Expanded diagnostics
```

A more detailed description of the individual functions can be found in chapter 10.

8.4 Operation

Described here is an operating process using parameter enabling as an example.

Parameter enabling

During normal operation parameters can only be viewed. If parameters are to be changed, the ON menu item in the Parameter -> Parameter handling -> Parameter enable menu must be activated. To do this, proceed as follows:

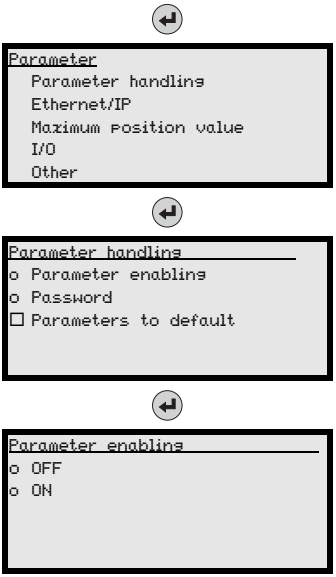

In the main menu, press the enter button to enter the Parameter menu.

Use the ▲ ▼ buttons to select the Parameter handling menu item.

Press the enter button to enter the Parameter handling menu.

In the Parameter handling menu, use the ▲ ▼ buttons to select the Parameter enabling menu item.

Press the enter button to enter the Parameter enabling menu.

In the Parameter enabling menu, use the ▲ ▼ buttons to select the ON menu item.

Press the enter button to switch on parameter enabling.

The PWR LED illuminates orange; the display is inverted. You can now set the individual parameters on the display.

Press the ESC button twice to return to the Parameter menu.

Viewing and editing parameters

As long as parameter enabling is activated, the entire AMS 358*i* display is inverted.

As long as parameter enabling is activated, communication between control and AMS 358*i* is interrupted. The continued networking via BUS OUT is retained.

Attention!

The AMS 358i offers a configuration assembly. If this is activated in the control, all parameters are to be entered there.

The configuration assembly is automatically downloaded to the AMS according to the criteria of the respective control.

This results in parameters that were manually changed via the display/panel being restored by the control to the state of the configured configuration assembly. The parameters that were manually changed via the display are, thus, no longer valid.

The address setting performed on the AMS 358*i* for EtherNet/IP is not affected by the automatic parameter download performed by the control.

Attention!

If the configuration assembly function is not activated, parameters set manually via the display/panel become active the moment parameter enabling is again deactivated on the AMS 358i.

Notice!

If a password was stored, parameter enabling is not possible until this password is entered, see "Password for parameter enabling" below.

Password for parameter enabling

Parameter entry on the AMS 358*i* can be protected with a password. With the AMS 358*i*, the password is defined via the EDS file (class 100, instance 1) or via the configuration assembly. Thus, the password cannot be changed by means of display entry.

To activate parameter enabling via the display (e.g., to enter an IP address), the defined password must be entered via the display. If parameter enabling has been activated after successfully entering the password, parameters can temporarily be changed via the display.

After parameter enabling is deactivated, all changes made on the display are overwritten by the configuration assembly (see above). If a new password has been assigned, this, too, is overwritten by the password defined in the configuration assembly.

Notice!

*The **master password 2301** can enable the AMS 358i at any time.*

9 EtherNet/IP interface

9.1 EtherNet/IP – general info

EtherNet/IP is an industrial communication network based on EtherNet and builds upon the TCP/IP and UDP/IP protocols.

EtherNet/IP makes use of the (**CIP**) **C**ommon **I**ndustrial **P**rotocol as an application layer for the user. CIP distinguishes between real-time communication by means of "implicit messages" and custom, acyclic services, which are referred to as "explicit messages".

Explicit messages

Explicit messages are sent on the basis of TCP/IP. The receiver interprets the message as an instruction, executes it, and generates a corresponding response. Explicit messages are used, e.g., for device configuration, programming and for diagnostics and for communicating non-time-critical data; they do not have a real-time characteristic.

Explicit messages are always sent using point-to-point communication.

All EDS objects of the AMS 358*i* described in the following can be called up via explicit services (e.g., get attribute single, set attribute single, etc.).

Implicit messages

Implicit messages are used to send real-time I/O data. For this purpose, EtherNet/IP does not use TCP, but rather UDP (User Datagram Protocol) via IP (Internet Protocol). This protocol is much more compact and supports multicast as well as unicast messages.

Implicit message telegrams are cyclically sent in short intervals with current data and I/O signals (cycle can be configured via the control). The telegram overhead is minimal here. As a result, these messages can be processed very quickly and according to priority.

Within the AMS 358*i*, the input and output assemblies for transferring measurement values by means of UDP are transferred and are thereby deterministically available in a cycle configured via the control.

For implicit messages, EtherNet/IP uses the producer/consumer communication model for data exchange. A producer is a device that sends data; a consumer is a device that receives data. Multiple consumers can thereby simultaneously receive and evaluate a producer message in the multicast operating mode.

In general, it must be observed that, when using multicast, the messages are sent to all participants by way of a broadcast. This causes the data traffic on the network to increase considerably. Should the data only be transmitted between the AMS and the PLC, we recommend configuring the unicast operating mode on the control for this participant.

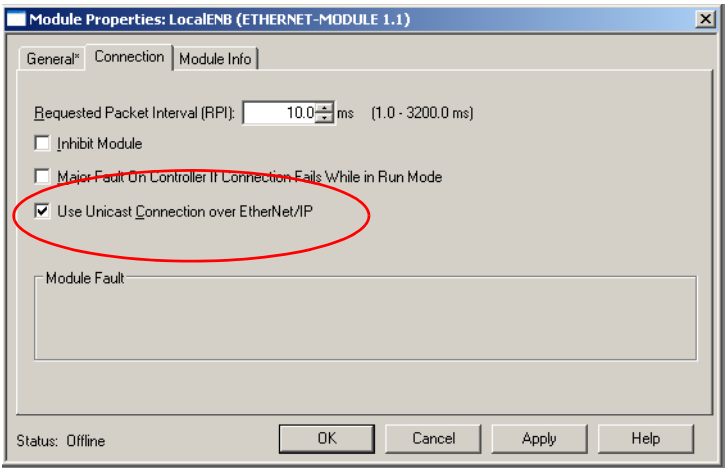

Thus, EtherNet/IP combines TCP/IP and UDP/IP data telegrams for the transfer of explicit and implicit messages. As a result, EtherNet/IP can use both real-time I/O data for time-critical control tasks (UDP) as well as information data (TCP) in parallel on a single network.

All data of the AMS 358*i* is represented via CIP in an object-oriented manner and is accessible to the user through the explicit and implicit messaging services described above.

Serving as the common configuration basis within CIP is the **EDS file** (**E**lectronic **D**ata **S**heet). The EDS file of the AMS 358*i* contains predefined input and output assemblies for UDP-based, real-time transfer as well as all configuration and diagnostic data for the TCP/IP-based services.

Notice!

The AMS 358i communicates via the Common Industrial Protocol (CIP).
CIP Safety, CIP Sync and CIP Motion are **not** *supported by the AMS 358i.*

The EDS file for the AMS 358*i* can be found on the Leuze website **www.leuze.com.**

9.2 Topology

The AMS 358*i* can be used in all topologies defined by EtherNet/IP. The M12 connections for BUS IN and BUS OUT are coupled to one another via an integrated switch. The AMS 358*i* can thus be used to further branch EtherNet/IP on the basis of standard CIP.

If parameter enabling of the AMS 358*i* is activated via the display, the AMS 358*i* is deactivated as a participant. This serves to prevent parameter access conflicts. In this case, it is possible as before to communicate with the participant connected via BUS OUT.

Notice!

The AMS 358i supports the DLR (Device-Level_Ring) ring structure determined by the ODVA.

9.3 Addressing

Each participant connected to EtherNet/IP must be assigned its own IP address. Addressing can be performed manually or automatically via DHCP or BootP.

By default, DHCP is set to "ON", BootP is set to "OFF". Both settings can be changed via the display.

Note!

Basic operation of the display is described in chapter 8.2.
To set the network addresses manually (not via DHCP), parameter enabling must be activated. The display is inverted with parameter enabling activated.

Attention!

The laser measurement system is deactivated on the EtherNet/IP when parameter enabling is activated via the display. The device is reactivated on the EtherNet/IP after parameter enabling is exited.

9.3.1 Entering the network addresses via the display

To do this proceed as follows:

- *Activate parameter enabling.*
- *Select the* `EtherNet/IP` *submenu.*
- *Select the* `IP address` *menu item.*
- *Enter the EtherNet IP address and save your entry with* `save`*.*
- *Select the* `Gateway` *menu item.*
- *Enter the gateway address and save your entry with* `save`*.*
- *Select the* `Net mask` *menu item.*
- *Enter the address of the net mask and save your entry with* `save`*.*
- *Deactivate parameter enabling.*

For information on manual address assignment for the IP address, the net mask (subnet) as well as any gateway, refer to the structure shown below.

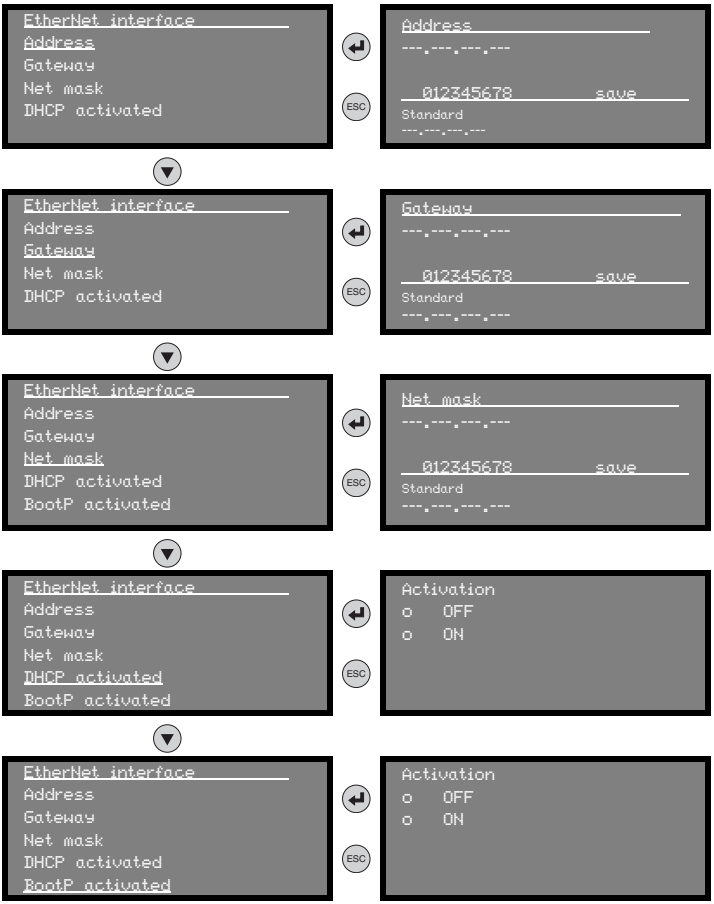

The complete menu structure can be found at the end of the description.

All addressing, including the MAC ID, can be called up via the `Network information` main menu mask.

```
Network information
Address:     ---.---.---.---
Net mask:    ---.---.---.---
Gateway:     ---.---.---.---
MAC ID:      --.--.--.--.--.--
```

9.4 EtherNet/IP device class

EtherNet/IP defines four different device classes. Serving as the basis for this is the fundamental behavior of the devices, their intended use and the product types assigned to a device class.

Furthermore, the device class defines the supported EtherNet/IP communication. The device class indicates whether explicit and implicit messages can be exchanged with the participant.

The device classes are divided into server, client, adapter and scanner.

The AMS 358*i* is assigned to the "adapter" device class and can thus receive and send both implicit and well as explicit messages.

9.4.1 Communication / EDS file

The EDS file is an integral part of the AMS 358*i*. All AMS 358*i* data can be called up via the object-, instance- and attribute addresses described in the following.

The EDS file makes available input and output assemblies for implicit (real-time) communication as well as a configuration assembly for all device parameters.

In addition, all data can be called up via explicit calls.

Notice!

The possibility of integrating the EDS file in the control is not standardized. Clarify with your control manufacturer as to whether integration in the control is supported.

If necessary, the EDS file can be downloaded from the Leuze website **www.leuze.com**.

The data is addressed according to the following fundamental scheme:

1. Device address (IP address)
   The participant is addressed with its IP address, which is unique in the network.
2. Object class identifier (class)
   Used as the basis for addressing the desired object class.
3. Object instance identifier (instance)
   Addressing of the object instance within the object class.

4. Attribute identifier (attribute)
   Addressing of the attribute within the object instance.
5. Service code (get, set, reset, start, stop and others...)
   The maintenance code ultimately describes the type of access to the data, e.g., reading or writing.

9.5 EtherNet/IP - Electrical connection

BUS IN (4-pin socket, D-coded)		
Pin	**Name**	**Remark**
1	**TD+**	Transmit Data +
2	**RD+**	Receive Data +
3	**TD-**	Transmit Data -
4	**RD-**	Receive Data -
Thread	**FE**	Functional earth (housing)

BUS OUT (4-pin socket, D-coded)		
Pin	**Name**	**Remark**
1	**TD+**	Transmit Data +
2	**RD+**	Receive Data +
3	**TD-**	Transmit Data -
4	**RD-**	Receive Data -
Thread	**FE**	Functional earth (housing)

Figure 9.1: EtherNet/IP - Electrical connection

Notice!

*For contacting **BUS IN** and **BUS OUT**, we recommend our ready-made EtherNet cable (see chapter 11.4.5 "Accessory ready-made cables for EtherNet/IP").*

9.6 EDS file - general info

An EDS file (Electronic Data Sheet) is provided for the AMS 358*i*.

The EDS file is named "AMS358i.eds"; the corresponding icon is named "AMS358i.ico"

Both files are available in the Download area of the Leuze website **www.leuze.com**.

The EDS file contains all identification and communication parameters of the device, as well as the available objects.

The AMS 358*i* is uniquely classified via a class 1 identity object (component of the AMS358i.eds file) for the EtherNet/IP scanner (master).

The identity object contains, among other things, a manufacturer-specific vendor ID, as well as an ID that describes the principle function of the participant.

The AMS 358*i* has the following identity object (class 1):

Vendor ID: 524 $_{Dec}$ / $20C_H$

Device type: 34 $_{Dec}$ / 22_H (identifies the AMS 358*i* as "encoder")

Position sensor type: 8 $_{Dec}$ / 8_H (specifies the AMS 358*i* as "absolute encoder")

If accepting the objects without change, all parameters are set to default values. The default settings are shown in the objects described in detail in the "Default" column.

An assembly is activated by default in the EDS file. The assembly automatically communicates its inputs and outputs to the control. Further information on the assemblies can be found in chapter 9.10.1.

Notice!

In the following tables, all attributes marked in the "Access" column with "Get" in the individual objects are to be understood as inputs of the scanner (control). E.g., "Read position value" --> Class 35; instance 1; attribute 10.

Attributes marked in the "Access" column with "Set" represent outputs or parameters. Outputs are set, e.g., "Laser off"--> Class 35; instance 1; attribute 110.

Parameters are also marked with "Set" and are written to the AMS. E.g., "Change of position format" --> Class 35; instance 1; attribute 15.

The EDS file is described in detail in the following. The access addresses to the individual objects as well as the default settings of the individual attributes are provided in this description.

Furthermore, assemblies with predefined inputs and outputs are made available for the implicit (real-time) communication. A more detailed description of the assemblies can be found in chapter 9.10.

The EDS file also contains a configuration assembly. Via the configuration assembly, the parameters of the AMS 358*i* can be stored in the control.

For this purpose, a corresponding memory location must be stored separately in the control for each participant.

If a "generic module" is used in the control for the configuration assembly, then all memory locations are preset with parameter values 0 (zero). When using the generic module, it is, therefore, mandatory that the individual parameters be transferred by hand from the manual (see chapter 9.10.1.5 "Configuration assembly").

9.7 Configuration steps for a Rockwell control without EDS support

9.7.1 Integrating the hardware into the PLC using the generic Ethernet module

In configuration tool **RSLogix 5000 up to software version 20.00**, a so-called **generic Ethernet module** is created under the Communication path for the AMS 358*i*.

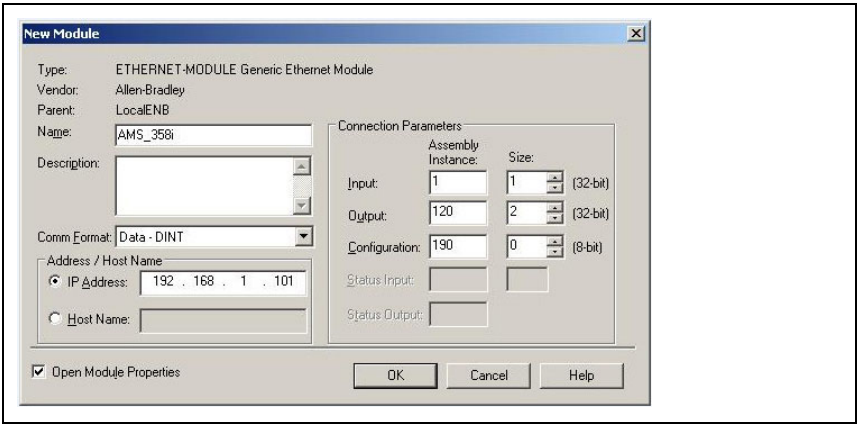

Figure 9.1: Generic Ethernet module

The input mask for the generic module describes the following parameters to be set:

- The name of the participant (can be selected freely; e.g. AMS 358*i*)
- The format of I/O data (data - SINT = 8 bits)
- The IP address of the participant
- The address and length of the input assembly (instance 100, instance 101 or instance 102; min 1 byte - up to max. 266 bytes for the default input assembly of the read results)
- The address and length of the output assembly (instance 120, instance 121 or instance 122; min 1 byte - up to max. 263 bytes for the default output assembly)
- The address and length of the configuration assembly (instance 190; 3 bytes)

9.8 Configuration steps for a Rockwell control with EDS support

The following steps are necessary for commissioning with a Rockwell control:

- Creation of the EtherNet/IP participants in PLC software **RSLogix 5000 from version 20.00 and up** (with EDS support).
- Installation of the EDS file using the EDS wizard.
- Setting the parameters of the AMS 358*i* via the configuration assembly or webConfig.

9.8.1 Integrating the hardware into the PLC and installing the EDS file

To integrate the device and to establish a connection between the PLC and the device AMS 358*i*, proceed as follows:

- First, load the EDS file for the device **via EDS wizard** into the PLC database.

Notice!

You can find the EDS file at **www.leuze.com**

- After it has downloaded, select the device from the device list.
- Open the input dialog for setting the address and additional parameters by double-clicking on the device symbol and make the desired entries here. Under **Change**, define the combination of input and output assemblies.

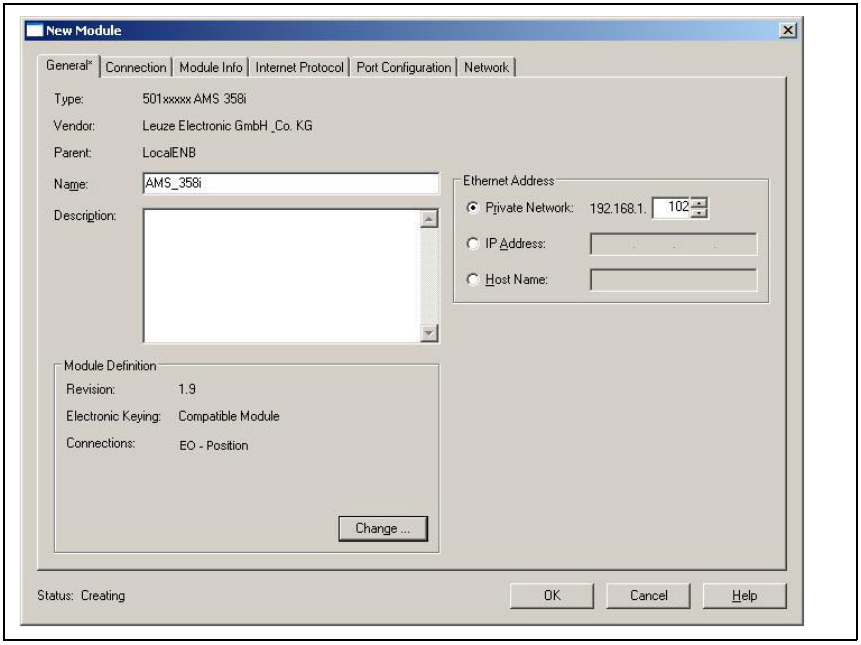

Figure 9.2: New module

- Finally, transmit the values to the control via download.

ПРОМЭЛЕКТРОНИКА / sales@prom-elec.com

9.9 Configuration examples

9.9.1 Example 1 - RSLogix 5000 up to software version V19.xx

Configuration of a generic module without the use of the configuration assembly

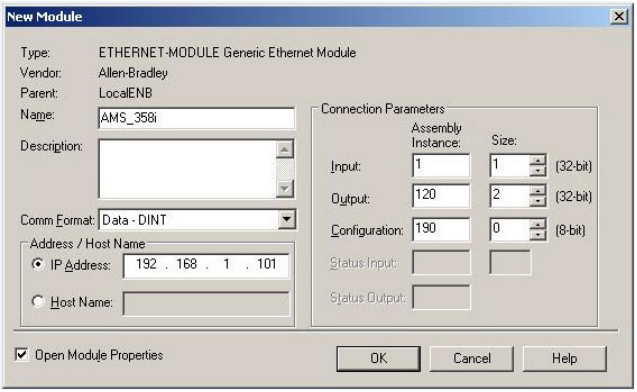

Figure 9.3: Configuration example 1 - RSLogix 5000 up to software version V19.xx

In this configuration, the default settings of the AMS 358*i* are applied.
Input assembly 1 and output assembly 120 are active.
Configuration assembly 190 is not active.

9.9.2 Example 2 - RSLogix 5000 up to software version V19.xx

Configuration of a generic module with the use of the configuration assembly

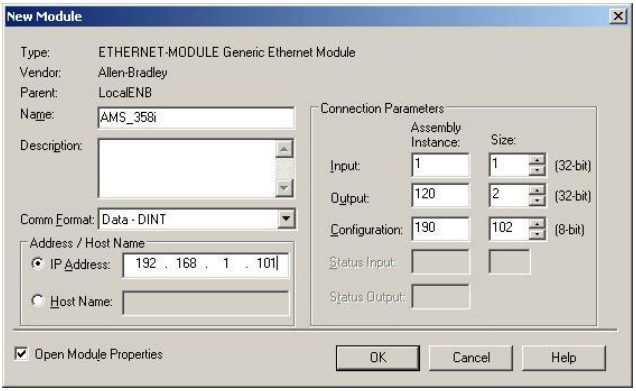

Figure 9.4: Configuration example 2 - RSLogix 5000 up to software version V19.xx

In this configuration, the default settings of the AMS 358*i* are applied.

Input assembly 1 and output assembly 120 are active.

Configuration assembly 190 is also active.

Attention!

For the configuration assembly, the generic modules reserves memory space equal only to the length of the entered 102 bytes. All bytes (parameters) are preset to 0 (zero). In the first moment, there are, thus, no default parameters stored for the AMS358i in the control. The parameters of all 102 bytes must be copied from the EDS file or manually transferred to the configured configuration assembly 190.

9.9.3 Example 3 - RSLogix 5000 for software versions V20.00 and higher

The RS Logix 5000 takes over all default parameters of configuration assembly 190 from the EDS files.

Other assemblies present in the EDS file can be configured via the "Module Definition".

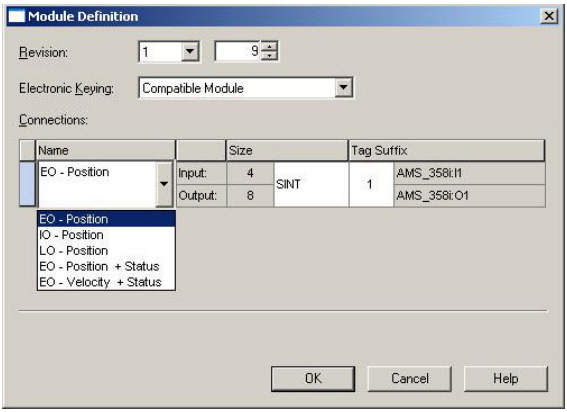

Figure 9.5: Configuration example 3 - RSLogix 5000 for software versions V20.00 and higher

The RSLogix does, however, only permit the use of **one** input assembly and/or **one** output assembly and/or **one** configuration assembly.

Multiple assemblies of type input or output or configuration are not possible.

9.10 EDS file - detailed description

Notice!

*In the following tables, all attributes marked in the **Access** column with **Get** in the individual objects are to be understood as inputs of the control. Attributes marked in the **Access** column with **Set** represent outputs or parameters.*

9.10.1 Class 4 Assembly

9.10.1.1 Position value

Path			Designation	Size in bit	Data type	Default (dec)	Min (dec)	Max (dec)	Access
Cl.	Inst.	Attr.							
4	1	3	Position	32	DINT	0	-2147483648	+2147483648	Get

Instance 1, attribute 3

Input assembly length: 4 bytes

Assembly for reading out the position value. According to the definition specified by the ODVA, the assembly with instance 1 is a mandatory assembly in the encoder profile.

Inst.	Byte	Bit 7	Bit 6	Bit 5	Bit 4	Bit 3	Bit 2	Bit 1	Bit 0
1	0	Position value (low byte)							
	1	Position value							
	2	Position value							
	3	Position value (high byte)							

Notice!

Negative values are displayed in two's complement.

9.10.1.2 Position value + status

Path			Designation	Size in bit	Data type	Default (dec)	Min (dec)	Max (dec)	Access
Cl.	Inst.	Attr.							
4	100	3	Position value	32	DINT	-	-21474836480	+2147483648	Get
			Status	8	Byte	-	0	31	Get
			Alarm warning	8	Byte	-	0	31	Get
			Reserved	16	DINT	0	-	-	Get

Instance 100, attribute 3

Input assembly length: 8 bytes

Leuze-specific assembly

Byte 0 - byte 3: position value
Byte 4: AMS 358*i* status
Byte 5: AMS 358*i* alarms and warnings
Byte 6 - Byte 7: reserved

Inst.	Byte	Bit 7	Bit 6	Bit 5	Bit 4	Bit 3	Bit 2	Bit 1	Bit 0
100	0	Position value (low byte)							

Inst.	Byte	Bit 7	Bit 6	Bit 5	Bit 4	Bit 3	Bit 2	Bit 1	Bit 0
	1	Position value							
	2	Position value							
	3	Position value (high byte)							
	4	0	0	0	Preset toggle	Preset status 1 = ON 0 = OFF	Status I/O 2 1 = ON 0 = OFF	Status I/O 1 1 = ON 0 = OFF	Laser diode ON / OFF 1 = ON 0 = OFF
	5	0	0	0	ATT 1 = ON 0 = OFF	LSR 1 = ON 0 = OFF	TMP 1 = ON 0 = OFF	PLB 1 = ON 0 = OFF	ERR 1 = ON 0 = OFF
	6	0	0	0	0	0	0	0	0
	7	0	0	0	0	0	0	0	0

Notice!

Negative values are displayed in two's complement.

9.10.1.3 Velocity value + status

Path			Designation	Size in bit	Data type	Default (dec)	Min (dec)	Max (dec)	Access
Cl.	Inst.	Attr.							
4	101	3	Velocity value	32	DINT	-	-999.999	+999.999	Get
			Status	8	Byte	-	0	63	Get
			Alarm warning	8	Byte	-	0	31	Get
			Reserved	16	DINT	0	-	-	Get

Instance 101, attribute 3

Input assembly length: 8 bytes

Leuze-specific assembly

Byte 0 - byte 3: velocity value
Byte 4: AMS 358*i* velocity status
Byte 5: AMS 358*i* alarms and warnings
Byte 6 - Byte 7: reserved

Inst.	Byte	Bit 7	Bit 6	Bit 5	Bit 4	Bit 3	Bit 2	Bit 1	Bit 0
100	0	Velocity value (low byte)							
	1	Velocity value							
	2	Velocity value							
	3	Velocity value (high byte)							
	4	0	0	Direction of movement 0 = pos. 1 = neg.	Movement status 1 = mov. 0 = no. mov.	Velocity limit value 4 status 1 = exceeded 0 = maintained	Velocity limit value 3 status 1 = exceeded 0 = maintained	Velocity limit value 2 status 1 = exceeded 0 = maintained	Velocity limit value 1 status 1 = exceeded 0 = maintained
	5	0	0	0	ATT 1 = ON 0 = OFF	LSR 1 = ON 0 = OFF	TMP 1 = ON 0 = OFF	PLB 1 = ON 0 = OFF	ERR 1 = ON 0 = OFF
	6	0	0	0	0	0	0	0	0
	7	0	0	0	0	0	0	0	0

Notice!

Negative values are displayed in two's complement.

9.10.1.4 Preset value + control

Path			Designation	Size in bit	Data type	Default (dec)	Min (dec)	Max (dec)	Access
Cl.	Inst.	Attr.							
4	120	3	Preset value	32	DINT	-	-21474836480	+2147483648	Set
			Preset control	8	Byte	-	0	3	Set
			Reserved	24	DINT	0	-	-	Get

Instance 120, attribute 3

Output assembly length: 8 bytes

Leuze-specific assembly

Byte 0 - byte 3: preset value
Byte 4: preset control
Byte 5 - Byte 7: reserved

Inst.	Byte	Bit 7	Bit 6	Bit 5	Bit 4	Bit 3	Bit 2	Bit 1	Bit 0
120	0	Preset value (low byte)							
	1	Preset value							
	2	Preset value							
	3	Preset value (high byte)							
	4	0	0	0	0	0	0	Preset reset 1 = ON 0 = OFF	Preset teach 1 = ON 0 = OFF
	5	0	0	0	0	0	0	0	0
	6	0	0	0	0	0	0	0	0
	7	0	0	0	0	0	0	0	0

Notice!

Negative values are displayed in two's complement.

9.10.1.5 Configuration assembly

The configuration assembly is stored in class 4, instance 190.

The length ("size") of the configuration assembly is 102 (see table below byte 0 … byte 101)

Upon transfer to the control, the configuration assembly is completely preset to 0 (zero).

The entries listed in the "Default" column must absolutely be manually transferred to the control if using the configuration assembly. It is not possible to automatically transfer the default settings.

All other, system-specific parameters set by the given programmer must also be transferred to the configuration assembly.

Notice!

In a narrower sense, offset value and preset values and their control are not permanent parameters, as they must – in part – be changed depending on the system state. For this reason, preset and offset values are not stored in the configuration assembly.

Make absolutely certain that parameters that are set in the AMS 358i via the control (explicit) (set attribute single Class xx instance xx attribute xx) are also transferred to the configuration assembly.
Only parameters that are also entered in the configuration assembly can be taken into account in all operating situations of the AMS 358i. Parameters that are set by explicit calls but are not entered in the configuration assembly may, therefore, act only temporarily. The next time the configuration assembly is automatically downloaded to the AMS 358i, these explicitly transferred parameters are again overwritten.

Byte	Cross-reference address Class/Instance/ Attribute	Function	Bit assignment (default)								Default (hex)
			7	6	5	4	3	2	1	0	
0	35 / 1 / 12	Direction counting	--	--	--	--	--	--	--	0	00
1	35 / 1 / 15	Position Format low byte	0	0	0	0	0	0	1	1	03
2		Position Format high byte	0	0	1	0	0	0	1	0	22
3	35 / 1 / 25	Velocity Format low byte	0	0	0	1	0	0	0	0	10
4		Velocity Format high byte	0	0	0	0	1	0	0	0	08
5	35 / 1 / 26	Velocity Free Resolution low byte	1	1	1	0	1	0	0	0	E8
6		Velocity free resolution	0	0	0	0	0	0	1	1	03
7		Velocity free resolution	0	0	0	0	0	0	0	0	00
8		Velocity Free Resolution high byte	0	0	0	0	0	0	0	0	00
9	35 / 1 / 107	Position Free Resolution low byte	1	1	1	0	1	0	0	0	E8
10		Position Free Resolution high byte	0	0	0	0	0	0	1	1	03
11	100 / 1 / 1	Language selection	--	--	--	--	--	0	0	0	00
12	100 / 1 / 2	Password protection	--	--	--	--	--	--	--	0	00
13	100 / 1 / 3	Password low byte	0	0	0	0	0	0	0	0	00
14		Password high byte	0	0	0	0	0	0	0	0	00
15	100 / 1 / 4	Display illumination	--	--	--	--	--	--	--	0	00
16	100 / 1 / 5	Display contrast	--	--	--	--	--	--	0	1	01
17	100 / 1 / 6	Extended heating control	--	--	--	--	--	--	--	0	00
18		Reserved	0	0	0	0	0	0	0	0	00
19		Reserved	0	0	0	0	0	0	0	0	00
20		Reserved	0	0	0	0	0	0	0	0	00

Byte	Cross-reference address Class/Instance/ Attribute	Function	Bit assignment (default)								Default (hex)
			7	6	5	4	3	2	1	0	
21	103 / 1 / 1	Function I/O (input or output)	--	--	--	--	--	--	--	1	01
22	103 / 1 / 2	Activation (high/low active)	--	--	--	--	--	--	--	0	00
23	103 / 1 / 3	Function output low byte	1	1	0	0	0	0	--	--	C0
24		Function outputhigh byte	--	--	--	--	--	--	--	0	00
25	103 / 1 / 4	Function input	--	--	--	--	--	--	0	0	00
26	103 / 2 / 1	Function I/O (input or output)	--	--	--	--	--	--	--	1	01
27	103 / 2 / 2	Activation (high/low active)	--	--	--	--	--	--	--	0	00
28	103 / 2 / 3	Function output low byte	0	0	1	1	1	0	0	0	38
29		Function outputhigh byte	0	0	0	0	0	0	0	0	00
30	103 / 2 / 4	Function input	--	--	--	--	--	--	0	0	00
31	104 / 1 / 1	Position value in the case of error	--	--	--	--	--	--	--	1	01
32	104 / 1 / 2	Suppress status PLB (position error)	--	--	--	--	--	--	--	1	01
33	104 / 1 / 3	Error delay (position error)	--	--	--	--	--	--	--	1	01
34	104 / 1 / 4	Error delay time positionlow byte	0	1	1	0	0	1	0	0	64
35		Error delay time positionhigh byte	0	0	0	0	0	0	0	0	00
36	104 / 1 / 5	Velocity value in case of failure	--	--	--	--	--	--	--	1	01
37	104 / 1 / 6	Suppress status (velocity error)	--	--	--	--	--	--	--	1	01
38	104 / 1 / 7	Error delay (velocity error)	--	--	--	--	--	--	--	1	01
39	104 / 1 / 8	Error delay time velocitylow byte	1	1	0	0	1	0	0	0	C8
40		Error delay time velocityhigh byte	0	0	0	0	0	0	0	0	00
41	105 / 1 / 1	Activation velocity monitoring	--	--	--	--	--	--	--	0	00
42	105 / 1 / 2	Switch type limit value exceeded/not met	--	--	--	--	--	--	--	0	00
43	105 / 1 / 3	Direction selection direction independent/dependent	--	--	--	--	--	--	--	0	00
44	105 / 1 / 4	Velocity limit value low byte	0	0	0	0	0	0	0	0	00
45		Velocity limit value high byte	0	0	0	0	0	0	0	0	00
46	105 / 1 / 5	Velocity hysteresis low byte	0	1	1	0	0	1	0	0	64
47		Velocity hysteresis high byte	0	0	0	0	0	0	0	0	00
48	105 / 1 / 6	Limit value range start low byte	0	0	0	0	0	0	0	0	00
49		Limit value range start	0	0	0	0	0	0	0	0	00
50		Limit value range start	0	0	0	0	0	0	0	0	00
51		Limit value range start high byte	0	0	0	0	0	0	0	0	00
52	105 / 1 / 7	Limit value range end low byte	0	0	0	0	0	0	0	0	00
53		Limit value range end	0	0	0	0	0	0	0	0	00
54		Limit value range end	0	0	0	0	0	0	0	0	00
55		Limit value range endhigh byte	0	0	0	0	0	0	0	0	00
56	105 / 2 / 1	Activation velocity monitoring	--	--	--	--	--	--	--	0	00
57	105 / 2 / 2	Switch type limit value exceeded/not met	--	--	--	--	--	--	--	0	00
58	105 / 2 / 3	Direction selection direction independent/dependent	--	--	--	--	--	--	--	0	00
59	105 / 2 / 4	Velocity limit value low byte	0	0	0	0	0	0	0	0	00
60		Velocity limit value high byte	0	0	0	0	0	0	0	0	00
61	105 / 2 / 5	Velocity hysteresis low byte	0	1	1	0	0	1	0	0	64
62		Velocity hysteresis high byte	0	0	0	0	0	0	0	0	00
63	105 / 2 / 6	Limit value range start low byte	0	0	0	0	0	0	0	0	00
64		Limit value range start	0	0	0	0	0	0	0	0	00
65		Limit value range start	0	0	0	0	0	0	0	0	00
66		Limit value range start high byte	0	0	0	0	0	0	0	0	00
67	105 / 2 / 7	Limit value range end low byte	0	0	0	0	0	0	0	0	00
68		Limit value range end	0	0	0	0	0	0	0	0	00
69		Limit value range end	0	0	0	0	0	0	0	0	00
70		Limit value range end high byte	0	0	0	0	0	0	0	0	00
71	105 / 3 / 1	Activation velocity monitoring	--	--	--	--	--	--	--	0	00

Byte	Cross-reference address Class/Instance/ Attribute	Function	Bit assignment (default)								Default (hex)
			7	6	5	4	3	2	1	0	
72	105 / 3 / 2	Switch type limit value exceeded/not met	--	--	--	--	--	--	--	0	00
73	105 / 3 / 3	Direction selection direction independent/dependent	--	--	--	--	--	--	--	0	00
74	105 / 3 / 4	Velocity limit value low byte	0	0	0	0	0	0	0	0	00
75		Velocity limit value high byte	0	0	0	0	0	0	0	0	00
76	105 / 3 / 5	Velocity hysteresis low byte	0	1	1	0	0	1	0	0	64
77		Velocity hysteresis high byte	0	0	0	0	0	0	0	0	00
78	105 / 3 / 6	Limit value range start low byte	0	0	0	0	0	0	0	0	00
79		Limit value range start	0	0	0	0	0	0	0	0	00
80		Limit value range start	0	0	0	0	0	0	0	0	00
81		Limit value range start high byte	0	0	0	0	0	0	0	0	00
82	105 / 3 / 7	Limit value range end low byte	0	0	0	0	0	0	0	0	00
83		Limit value range end	0	0	0	0	0	0	0	0	00
84		Limit value range end	0	0	0	0	0	0	0	0	00
85		Limit value range end high byte	0	0	0	0	0	0	0	0	00
86	105 / 4 / 1	Activation velocity monitoring	--	--	--	--	--	--	--	0	00
87	105 / 4 / 2	Switch type limit value exceeded/not met	--	--	--	--	--	--	--	0	00
88	105 / 4 / 3	Direction selection direction independent/dependent	--	--	--	--	--	--	--	0	00
89	105 / 4 / 4	Velocity limit value low byte	0	0	0	0	0	0	0	0	00
90		Velocity limit value high byte	0	0	0	0	0	0	0	0	00
91	105 / 4 / 5	Velocity hysteresis low byte	0	1	1	0	0	1	0	0	64
92		Velocity hysteresis high byte	0	0	0	0	0	0	0	0	00
93	105 / 4 / 6	Limit value range start low byte	0	0	0	0	0	0	0	0	00
94		Limit value range start	0	0	0	0	0	0	0	0	00
95		Limit value range start	0	0	0	0	0	0	0	0	00
96		Limit value range start high byte	0	0	0	0	0	0	0	0	00
97	105 / 4 / 7	Limit value range end low byte	0	0	0	0	0	0	0	0	00
98		Limit value range end	0	0	0	0	0	0	0	0	00
99		Limit value range end	0	0	0	0	0	0	0	0	00
100		Limit value range end high byte	0	0	0	0	0	0	0	0	00
101		Reserved	0	0	0	0	0	0	0	0	00

Attention!

In byte 1 to 4, the formats for the position value as well as for the velocity value are defined. The formats for velocity and position value must be the same.
Example:
Position value format metric = velocity value format metric

Different formats such as position value metric and velocity value inch are not allowed.

9.10.2 Class 1 Identity object

Object class 1 = 01_H

Service:

- Get_Attribute_Single

Path Cl.	Path Inst.	Path Attr.	Designation	Size in bit	Data type	Default (dec)	Min (dec)	Max (dec)	Access
1	1	1	Vendor-Id	16	UINT	524	-	-	Get
		2	Device type	16	UINT	34	-		Get
		3	Product code	16	UINT	2	-		Get
		4	Revision (Major, minor)	16	Struct{ USINT major, USINT minor};	Major = 1, Minor = 1	Major = 1, Minor = 1	Major = 127, Minor = 999	Get
		5	Status	16	WORD	See CIP specification (5-2.2.1.5 status)			Get
		6	Serial number	32	UDINT	Manufacturer specific			Get
		7	Product name	(max. 32) x 8	SHORT_STRING	"AMS 358i"			Get
		8	State	8	USINT	Default 0			Get
		9	Configuration Consistency Value	16	UINT	Default 0, (limited support)			Get

In the event of a device exchange in the system, the major revision number should **not** be monitored. The major revision number describes the firmware version of the AMS 358*i* software within the EDS file/object 1. This may have changed during a possible device exchange. The scanner would otherwise output an error message following a device exchange.

9.10.2.1 Vendor ID

The Vendor ID assigned by ODVA for Leuze electronic GmbH + Co. KG is 524_D.

9.10.2.2 Device type

The AMS 358*i* is defined by Leuze electronic as an encoder. According to ODVA, the AMS 358*i* is assigned number $34_D = 22_H$.

9.10.2.3 Product code

The product code is an ID assigned by Leuze electronic that has no further impact on other objects.

9.10.2.4 Revision

Version number of the identity object.

9.10.2.5 Status

Principle and primary monitoring of the device, of the network and of the configuration. The entries are described by the scanner.

Bit 7	Bit 6	Bit 5	Bit 4	Bit 3	Bit 2	Bit 1	Bit 0
ext. device state				reserved	configured	reserved	owned
Bit 15	**Bit 14**	**Bit 13**	**Bit 12**	**Bit 11**	**Bit 10**	**Bit 9**	**Bit 8**
reserved				Major unrecoverable fault	Major recoverable fault	Major unrecoverable fault	Major recoverable fault

9.10.2.6 Serial number

For use in EtherNet, the serial number receives a serial number converted according to CIP. CIP describes a special format for the serial number. After conversion to a CIP code, the serial number is, as before, unique, but no longer corresponds in its resolution to the serial number on the name plate.

9.10.2.7 Product name

This attribute contains a short designation of the product. Devices with the same product code may have different "product names".

9.10.2.8 State

This attribute contains information about the current status of the AMS358i.

9.10.2.9 Configuration Consistency Value

In this attribute, an entry may occur upon change of a parameter. The function is not supported by the AMS 358*i*. The default entry of 0 (zero) does not change.

9.10.2.10 Heartbeat Interval

The attribute sets a time interval in which a "heartbeat message" is sent by the AMS 358*i*.

The value is entered in seconds.

9.10.3 Class 35 Position sensor object

Object class 35 = 23_H

Service:

- Get_Attribute_Single
- Set_Attribute_Single

Path			Designation	Size in bit	Data type	Default (dec)	Min (dec)	Max (dec)	Access
Cl.	Inst.	Attr.							
35	**1**	**10**	Position value	32	DINT	0	-2147483648	2147483647	Get
		11	Sensor type	16	UINT	8	-	-	Get
		12	Direction counting	8	BYTE	0	0	1	Set
		15	Position format	16	ENGUNIT	8707	see below		Set
		24	Velocity value	32	DINT	0	-999.999	999.999	Get
		25	Velocity format	16	ENGUNIT	2064	see below		Set
		26	Velocity resolution	32	UDINT	1000	1	50.000	Set
		41	Operating status	8	BYTE	0	see below		Get
		44	Alarms	16	WORD	0	see below		Get
		45	Supported alarms	16	WORD	see below			Get
		46	Alarm flag	8	BYTE	0	0	1	Get
		47	Warnings	16	WORD	0	see below		Get
		48	Supported warnings	16	WORD	see below			Get
		49	Warning flag	8	BYTE	0	0	1	Get
		50	Operating time	32	UDINT	0	0	4294967295	Get
		100	Preset value	32	DINT	0	-999.999	999.999	Set
		101	Preset teach	8	BYTE	0	0	1	Set
		102	Preset status	8	BYTE	0	0	1	Get
		103	Preset toggle	8	BYTE	0	0	1	Get
		104	Preset reset	8	BYTE	0	0	1	Set
		105	Direction of movement	8	BYTE	0	0	1	Get
		106	Movement status	8	BYTE	0	0	1	Get
		107	Free resolution	16	UINT	5	5	50.000	Set
		108	Offset value	32	DINT	0	-999.999	999.999	Set
		109	Laser status	8	BYTE	0	0	1	Get
		110	Laser control	8	BYTE	0	0	1	Set

The function of object class 35 (23_H) is defined in the CIP network specification as "position sensor object". The position sensor object describes the functions of an absolute measuring encoder. As defined in the CIP specification, attributes with address 1 to 99 are functionally predetermined. From this address range, the AMS 358*i* serves only those attributes that are functionally mapped in the AMS. Address range ≥ 100 is manufacturer-specific.

9.10.3.1 Position value

Attribute 10

Read position value.

Attr.	Byte	Bit 7	Bit 6	Bit 5	Bit 4	Bit 3	Bit 2	Bit 1	Bit 0
10	**0**	Position value (low byte)							
	1	Position value							
	2	Position value							
	3	Position value (high byte)							

Notice!

Negative values are displayed in two's complement.

9.10.3.2 Position sensor type

Attribute 11

Specifies the encoder with ID 8_d defined via CIP as absolute measuring linear encoder.

9.10.3.3 Direction counting

Attribute 12

Defines whether the measured distance value increases (positive counting direction) or decreases (negative counting direction) with increasing distance.

0 = positive counting direction
1 = negative counting direction

9.10.3.4 Position format

Attribute 15

Configures the position format as well as the resolution. The EDS file makes available the following parameters:

Dec. value	Hex. Value	Unit	Format
8706	0x22 02	Centimeter [cm]	Metric
8707	0x22 03	Millimeter [mm]	
8708	0x22 04	Micrometer [µm]	
2048	0x08 00	Free resolution [mm]	
2049	0x08 01	Tenth of millimeter [mm/10]	
2050	0x08 02	Hundredths of millimeter [mm/100]	
2051	0x08 03	Hundredths of inch [in/100]	Inch
2052	0x08 04	Free resolution [in/100]	

Notice!

If the position format is changed from metric to inch, the velocity format is automatically, internally converted to hundredths of an inch per second. If the position format is changed from inch to metric, the velocity format is automatically, internally converted to millimeters per second.

9.10.3.5 Velocity value

Attribute 24

Read velocity value.

Attr.	Byte	Bit 7	Bit 6	Bit 5	Bit 4	Bit 3	Bit 2	Bit 1	Bit 0
24	0	Velocity value (low byte)							
	1	Velocity value							
	2	Velocity value							
	3	Velocity value (high byte)							

Notice!

Negative values are displayed in two's complement.

9.10.3.6 Velocity format

Attribute 25

Configures the velocity value as well as the resolution. The EDS file makes available the following parameters:

Dec. value	Hex. Value	Unit	Format
11008	0x2B 00	Meters per second [m/s]	Metric
11009	0x2B 01	Centimeters per second [cm/s]	
2064	0x08 10	Millimeters per second [mm/s]	
2065	0x08 11	Decimeters per second [dm/s]	
2066	0x08 12	Hundredths of an inch per second [in/100s]	Inch
2067	0x08 13	Meters per minute [m/min]	Metric
2068	0x08 14	Free resolution [mm/100s]	
2069	0x08 15	Free resolution [in/1000s]	Inch

Notice!

If the velocity format is changed from metric to inch, the position format is automatically, internally converted to hundredths of an inch. If the velocity format is changed from inch to metric, the position format is automatically, internally converted to millimeters.

9.10.3.7 Velocity free resolution

Attribute 26

Free resolution refers to parameters 2068 and 2069 in attribute 25 (velocity format).

For parameter 2068, the entry is made in mm/100s; for parameter 2069, the entry is made in inch/1000s.

9.10.3.8 Operating status - direction counting

Attribute 41

Bit 7	Bit 6	Bit 5	Bit 4	Bit 3	Bit 2	Bit 1	Bit 0
Vendor spec.			reserved			Scaling	Direction

Attribute 41 is the acknowledgment of the AMS 358*i* to the counting direction configured in attribute 12.

The counting direction is output in bit 0.

0 = positive counting direction
1 = negative counting direction

Bits 1 - 7 have no meaning and have status 0.

9.10.3.9 Alarms

Attribute 44

Bit 7	Bit 6	Bit 5	Bit 4	Bit 3	Bit 2	Bit 1	Bit 0
reserved						ERR	PLB
Bit 15	**Bit 14**	**Bit 13**	**Bit 12**	**Bit 11**	**Bit 10**	**Bit 9**	**Bit 8**
Vendor spec.				reserved			

The PLB and ERR status messages generated by AMS 358*i* are entered in bit 0 and bit 1.

The alarms entered here result in incorrect measurement values on the AMS 358*i*. The CIP spec. distinguishes between alarms and warnings.

The following applies for PLB and ERR:

0 = no alarm
1 = alarm

9.10.3.10 Supported alarm

Attribute 45

Attribute 45 shows which alarms specified by the position sensor object are supported by the AMS 358*i*.

Bit 7	Bit 6	Bit 5	Bit 4	Bit 3	Bit 2	Bit 1	Bit 0
reserved						1	1
Bit 15	**Bit 14**	**Bit 13**	**Bit 12**	**Bit 11**	**Bit 10**	**Bit 9**	**Bit 8**
Vendor spec.				reserved			

Bit 0 =1; PLB alarm is supported by the AMS 358*i*.

Bit 1 =1; ERR alarm is supported by the AMS 358*i*.

Bit 2 to bit 15 = 0

9.10.3.11 Alarm flag

Attribute 46

The attribute evaluates the alarms supported in attribute 45 in an OR function. (Collective alarm)

9.10.3.12 Warnings

Attribute 47

According to the CIP specification, warning messages are messages that signal the exceeding of internal limit values but do not result in incorrect measurement values.

Status messages ATT, LSR and TMP are entered as warnings by the AMS 358*i*. For this purpose, an area is reserved in the CIP spec. for device-specific data (bits 13-15).

Bit 7	Bit 6	Bit 5	Bit 4	Bit 3	Bit 2	Bit 1	Bit 0
–	–	–	–	–	–	–	–
Bit 15	**Bit 14**	**Bit 13**	**Bit 12**	**Bit 11**	**Bit 10**	**Bit 9**	**Bit 8**
ATT	LSR	TMP	–	–	–	–	–

9.10.3.13 Supported warnings

Attribute 48

Attribute 48 shows which warnings specified by the position sensor object are supported by the AMS 358*i*.

Bit 7	Bit 6	Bit 5	Bit 4	Bit 3	Bit 2	Bit 1	Bit 0
–	–	–	–	–	–	–	–
Bit 15	**Bit 14**	**Bit 13**	**Bit 12**	**Bit 11**	**Bit 10**	**Bit 9**	**Bit 8**
1	1	1	–	–	–	–	–

Bit 13 =1; TMP warning is supported by the AMS 358*i*.

Bit 14 =1; LSR warning is supported by the AMS 358*i*.

Bit 15 =1; ATT warning is supported by the AMS 358*i*.

Bit 0 to bit 12 = 0

9.10.3.14 Warning flag

Attribute 49

The attribute evaluates the warnings supported in attribute 48 in an OR function (collective warning).

9.10.3.15 Operating time

Attribute 50

As long as the AMS 358*i* is connected to power, the value is increased in increments of 1/10 hours. The value cannot be reset.

9.10.3.16 Preset value

Attribute 100

With the attribute, it is possible to set the current position value to a desired position value.

Attr.	Byte	Bit 7	Bit 6	Bit 5	Bit 4	Bit 3	Bit 2	Bit 1	Bit 0
100	0	Preset value (low byte)							
	1	Preset value							
	2	Preset value							
	3	Preset value (high byte)							

9.10.3.17 Preset teach

Attribute 101

The attribute activates the value configured in attribute 100.

1 = preset teach

Notice!

As a result of this
- attribute 103 is toggled,
- attribute 102 is set.

9.10.3.18 Preset status

Attribute 102

The attribute specifies whether the preset function is activated.

1 = preset active
0 = preset inactive

9.10.3.19 Preset toggle

Attribute 103

The attribute is toggled after the preset value is activated.

Notice!

Activation of the preset value via attribute 101.

9.10.3.20 Preset reset

Attribute 104

The attribute is used for deleting the set preset value. The preset status (attribute 102) is set to inactive.

1 = delete preset value.

Notice!

Attribute 103 is toggled.

9.10.3.21 Direction of movement

Attribute 105

At a velocity > 100 mm/s, the attribute indicates the direction of movement.

0 = positive direction of movement
1 = negative direction of movement

The definition of the direction of movement is dependent on class 35, instance 1, attribute 12:

- Positive counting direction:
  Measurement values **increase** if the reflector moves away from the AMS 358*i*. In this case, the positive direction = 0 in attribute 105.
- Count direction negative:
  Measurement values **decrease** if the reflector moves away from the AMS 358*i*. In this case, the positive direction = 1 in attribute 105.

9.10.3.22 Movement status

Attribute 106

The attribute indicates whether the absolute value is large enough (> 100 mm/s) to register a movement.

0 = |cur. velocity| < 100 mm/s
1 = |cur. velocity| > 100 mm/s

9.10.3.23 Free resolution

Attribute 107

The free resolution refers to parameters 2048 and 2052 in attribute 15.

For parameter 2048, the entry is made in mm/1000; for parameter 2052, the entry is made in inch/100,000.

Example:

For a free resolution of e.g., 0.875 mm, the value "875" must be entered for parameter 2048.

9.10.3.24 Offset

Attribute 108

Measurement value at the interface = measured distance + offset.

The attribute sets an offset to the measured value in the AMS 358*i*. The offset takes immediate effect following instruction "set attribute single class1 instance1 attribute108".

Attr.	Byte	Bit 7	Bit 6	Bit 5	Bit 4	Bit 3	Bit 2	Bit 1	Bit 0
108	0	Offset value calculated from activated preset value (low byte)							
	1	Offset value calculated from activated preset value							
	2	Offset value calculated from activated preset value							
	3	Offset value calculated from activated preset value (high byte)							

9.10.3.25 Laser diode laser status

Attribute 109

The attribute signals the status of the laser diode.

0 = laser diode on
1 = laser diode off

9.10.3.26 Laser diode laser control

Attribute 110

The laser can be switched on and off via this attribute.

1 = laser diode on
0 = laser diode off

9.10.4 Class 100 Display configuration

Object class 100 = 64_H

Service:

- Get_Attribute_Single
- Set_Attribute_Single

Path			Designation	Size in bit	Data type	Default (dec)	Min (dec)	Max (dec)	Access
Cl.	Inst.	Attr.							
100	1	1	Language selection	8	BYTE	0	0	16	Set
		2	Password protection	8	BYTE	0	0	1	Set
		3	Password	16	UINT	0	0	9.999	Set
		4	Illumination	8	BYTE	0	0	1	Set
		5	Contrast	8	BYTE	1	0	3	Set
		6	Extended heating control	8	BYTE	0	0	1	Set

9.10.4.1 Language selection

Attribute 1

The attribute can be used to configure the language that appears in the display.

The following table provides information on the languages available for selection.

Language	Value
English	0
German	1
Italian	2
Spanish	3
French	4

9.10.4.2 Password protection

Attribute 2

The attribute activates password protection.

1 = password protection active
0 = password protection inactive

9.10.4.3 Password

Attribute 3

The attribute specifies the password. The password protection attribute (attribute 2) must be active. Value range of the password: 0000 - 9999.

The master password **2301** can be used to activate parameter enabling via the display/ panel.

9.10.4.4 Illumination

This attribute is used to set whether the display illumination is to be switched off 10 minutes after the last button operation or whether the illumination is always to be on.

0 = display illumination off 10 minutes after the last button operation
1 = display illumination always on

9.10.4.5 Contrast

When exposed to extreme ambient temperatures, the display contrast may change. This attribute adjusts the display illumination.

Value	Contrast
0	Weak
1	Medium
2	Strong

9.10.4.6 Extended heating control

This attribute is used to activate extended heating control.

The extended heating control range of the internal device heating may prevent condensation from forming on the optics of the AMS 358*i*. The internal heating of the AMS 358*i* is switched on at higher ambient temperatures (30 °C) if the parameter is set.

In the event of very large and fast fluctuations in temperature and humidity, the power of the internal heating may not be sufficient to prevent condensation.

	On	Off
0 = switch-on / switch-off temperature of internal heating:	10 °C (50 °F)	15 °C (59 °F)
1 = switch-on / switch-off temperature of internal heating:	30 °C (86 °F)	35 °C (95 °F)

9.10.5 Class 103 Switching inputs/outputs

Class 103, instance 1 describes I/O 1 (PIN 2/M12 Power)

Class 103, instance 2 describes I/O 2 (PIN 4/M12 Power)

Object class 103 = 67_H

Service:

- Get_Attribute_Single
- Set_Attribute_Single

Path			Designation	Size in bit	Data type	Default (dec)	Min (dec)	Max (dec)	Access
Cl.	Inst.	Attr.							
103	1	1	Function I/O (input/output)	8	BYTE	1	0	1	Set
		2	Activation (high/low active)	8	BYTE	0	0	1	Set
		3	Output function	16	WORD	192	0	511	Set
		4	Input function	8	BYTE	0	0	3	Set
		5	Status (input/output)	8	BYTE	0	0	1	Get
		6	Activation output	8	BYTE	0	0	1	Set
103	2	1	Function I/O (input/output)	8	BYTE	1	0	1	Set
		2	Activation (high/low active)	8	BYTE	0	0	1	Set
		3	Output function	16	WORD	56	0	511	Set
		4	Input function	8	BYTE	0	0	3	Set
		5	Status (input/output)	8	BYTE	0	0	1	Get
		6	Activation output	8	BYTE	0	0	1	Set

9.10.5.1 Definition of input/output

Instance 1, attribute 1 (PIN 2/M12 Power)

Instance 2, attribute 1 (PIN 4/M12 Power)

This attribute defines whether PIN 2/PIN 4 on the M12 power connection functions as an input or an output.

1 = output
0 = input

Attribute description for the case that attribute 1 is selected as switching input in instance 1 or 2.

9.10.5.2 Activation for inputs

Instance 1, attribute 2 (PIN 2/M12 Power)

Instance 2, attribute 2 (PIN 4/M12 Power)

The switching input of the AMS 358*i* is edge-triggered.

0 = switching input responds to a falling edge (transition from logical 1 to 0)
1 = switching input responds to a rising edge (transition from logical 0 to 1)

9.10.5.3 Function assignment of the inputs

Instance 1, attribute 4 (PIN 2/M12 Power)

Instance 2, attribute 4 (PIN 4/M12 Power)

Attribute 4 defines which function is to be triggered when the input is set in the AMS 358*i*.

Bit 7	Bit 6	Bit 5	Bit 4	Bit 3	Bit 2	Bit 1	Bit 0
-	-	-	-	-	-	Laser ON/OFF	Preset teach

Bit 0 = preset teach

The switching input responds to the edge set in attribute 2. The preset value is accepted at the position at which the switching input detects an edge change as defined in attribute 2.

Bit 1 = laser ON/OFF

The switching input responds to the edge set in attribute 2. The laser is switched OFF if the switching input detects an edge change as described in attribute 2. If the opposite edge is detected at the switching input, the laser is switched back ON.

9.10.5.4 Input function status

Instance 1, attribute 5 (PIN 2/M12 Power)

Instance 2, attribute 5 (PIN 4/M12 Power)

0 = input function is inactive. Neither laser ON/OFF nor preset teach is active.
1 = input function is active. Laser ON/OFF or preset teach or both were activated.

Attribute description for the case that attribute 1 is selected as switching output in instance 1 or 2.

9.10.5.5 Activation for outputs

Instance 1, attribute 2 (PIN 2/M12 Power)

Instance 2, attribute 2 (PIN 4/M12 Power)

The attribute defines the level of the output if the "output" event occurs.

0 = from logical 1 to logical 0 if the "output" event occurs (see attribute 3)
1 = from logical 0 to logical 1 if the "output" event occurs (see attribute 3)

9.10.5.6 Function assignment of the hardware outputs

Instance 1, attribute 3 (PIN 2/M12 Power)

Instance 2, attribute 3 (PIN 4/M12 Power)

The attribute defines which event triggers activation of the output. The individual functions are OR linked.

Bit 7	Bit 6	Bit 5	Bit 4	Bit 3	Bit 2	Bit 1	Bit 0
Hardware (ERR)	Plausibility (PLB)	Laser (LSR)	Temperature (TMP)	Intensity (ATT)	Velocity limit value violated	reserved	
Bit 15	**Bit 14**	**Bit 13**	**Bit 12**	**Bit 11**	**Bit 10**	**Bit 9**	**Bit 8**
reserved							Dynamic output

For instance 1 attribute 3, the default is defined as 192_d / 00 $C0_h$ / 0000 0000 1100 0000_b. This means that at the output (PIN 2), an edge change occurs as defined in attribute 2 with the ERR or PLB messages.

For instance 2 attribute 3, the default is defined as 56_d / 00 38_h / 0000 0000 0011 1000_b. This means that at the output (PIN 4), an edge change occurs as defined in attribute 2 with the LSR or TMP or ATT messages.

9.10.5.7 Output function status

Instance 1, attribute 5 (PIN 2/M12 Power)

Instance 2, attribute 5 (PIN 4/M12 Power)

0 = output function is inactive. No event from attribute 3 is active.
1 = output function is active. At least one event from attribute 3 has been activated.

9.10.5.8 Activation output (dynamic output)

Instance 1, attribute 6 (PIN 2/M12 Power)

Instance 2, attribute 6 (PIN 4/M12 Power)

With the dynamic output, the hardware outputs (PIN 2/PIN 4) can be set via the control software.

Activation is via bit 8.

0 = dynamic output inactive
1 = the hardware output(s) is(are) set as defined in attribute 2

The outputs are dynamically set via 256_d (256 = status message bits 7 to 2 are disregarded).

9.10.6 Class 104 Behavior in the case of error

Object class 104 = 68_H

Service:

- Get_Attribute_Single
- Set_Attribute_Single

Path			Designation	Size in bit	Data type	Default (dec)	Min (dec)	Max (dec)	Access
Cl.	Inst.	Attr.							
104	1	1	Position value in the case of error	8	BYTE	1	0	1	Set
		2	Suppress position status	8	BYTE	1	0	1	Set
		3	Error delay (position)	8	BYTE	1	0	1	Set
		4	Error delay time (position)	16	UINT	100	100	1.000	Set
		5	Velocity in the case of failure	8	BYTE	1	0	1	Set
		6	Suppress velocity status	8	BYTE	1	0	1	Set
		7	Error delay (velocity)	8	BYTE	1	0	1	Set
		8	Error delay time (velocity)	16	UINT	200	200	1.000	Set

9.10.6.1 Position value in the case of failure

Attribute 1

The attribute specifies which position is transmitted in the case of an error after the "error delay time - position" elapses.

0 = last valid value
1 = value 0

9.10.6.2 Error delay - position status

Attribute 2

The attribute specifies whether the PLB status bit (implausible measurement value) is set immediately or after the "error delay time - position" elapses.

0 = PLB status bit is set immediately
1 = PLB status bit is set with a delay

9.10.6.3 Error delay - position

Attribute 3

The attribute specifies whether—in the case of an error—the position value immediately outputs the value of attribute 1 (0 or last valid value) or the last valid position value for the configured error delay time (attribute 4).

0 = error delay deactivated
1 = error delay activated

9.10.6.4 Error delay time - position

Attribute 4

Errors that occur are suppressed for the configured time. If no valid position value can be ascertained during the configured time, the last valid position value is output. If the error continues after the time elapses, the value configured in the "Position value in the case of error" attribute (attribute 1) is output. The error delay time is specified in milliseconds [ms] and must be a value between 100 and 1000.

9.10.6.5 Velocity in the case of error

Attribute 5

The attribute specifies which velocity is transmitted in the case of an error after the "error delay time - velocity" elapses.

0 = last valid value
1 = value 0

9.10.6.6 Error delay - velocity status

Attribute 6

The attribute specifies whether the PLB status bit (implausible measurement value) is set immediately or after the "error delay time - velocity" elapses.

0 = PLB status bit is set immediately
1 = PLB status bit is set with a delay

9.10.6.7 Error delay - velocity

Attribute 7

The attribute specifies whether—in the case of an error—the velocity value immediately outputs the value of attribute 5 (0 or last valid value) or the last valid velocity value for the configured error delay time (attribute 8).

0 = error delay deactivated
1 = error delay activated

9.10.6.8 Error delay time - velocity

Attribute 8

Errors that occur are suppressed for the configured time. If no valid velocity value can be ascertained during the configured time, the last valid velocity value is output. If the error continues after the time elapses, the value configured in the "Velocity in the case of error" attribute (attribute 5) is output. The error delay time is specified in milliseconds [ms] and must be a value between 200 and 1000.

9.10.7 Class 105 Velocity monitoring

Class 105, instance 1: attributes for velocity limit value 1

Class 105, instance 2: attributes for velocity limit value 2

Class 105, instance 3: attributes for velocity limit value 3

Class 105, instance 4: attributes for velocity limit value 4

Object class 105 = 69_H

Service:

- Get_Attribute_Single
- Set_Attribute_Single

Path			Designation	Size in bit	Data type	Default (dec)	Min (dec)	Max (dec)	Access
Cl.	Inst.	Attr.							
105	**1**	**1**	Enable	8	BYTE	0	0	1	Set
		2	Switching mode	8	BYTE	0	0	1	Set
		3	Direction selection	8	BYTE	0	0	1	Set
		4	Velocity limit value	16	UINT	0	0	20.000	Set
		5	Velocity hysteresis	16	UINT	100	0	20.000	Set
		6	Limit value range start	32	DINT	0	-999.999	999.999	Set
		7	Limit value range end	32	DINT	0	-999.999	999.999	Set
		8	Limit value status	8	BYTE	0	0	1	Get
		9	Limit value comparison	8	BYTE	0	0	1	Get
105	**2**	**1**	Enable	8	BYTE	0	0	1	Set
		2	Switching mode	8	BYTE	0	0	1	Set
		3	Direction selection	8	BYTE	0	0	1	Set
		4	Velocity limit value	16	UINT	0	0	20.000	Set
		5	Velocity hysteresis	16	UINT	100	0	20.000	Set
		6	Limit value range start	32	DINT	0	-999.999	999.999	Set
		7	Limit value range end	32	DINT	0	-999.999	999.999	Set
		8	Limit value status	8	BYTE	0	0	1	Get
		9	Limit value comparison	8	BYTE	0	0	1	Get
105	**3**	**1**	Enable	8	BYTE	0	0	1	Set
		2	Switching mode	8	BYTE	0	0	1	Set
		3	Direction selection	8	BYTE	0	0	1	Set
		4	Velocity limit value	16	UINT	0	0	20.000	Set
		5	Velocity hysteresis	16	UINT	100	0	20.000	Set
		6	Limit value range start	32	DINT	0	-999.999	999.999	Set
		7	Limit value range end	32	DINT	0	-999.999	999.999	Set
		8	Limit value status	8	BYTE	0	0	1	Get
		9	Limit value comparison	8	BYTE	0	0	1	Get
105	**4**	**1**	Enable	8	BYTE	0	0	1	Set
		2	Switching mode	8	BYTE	0	0	1	Set
		3	Direction selection	8	BYTE	0	0	1	Set
		4	Velocity limit value	16	UINT	0	0	20.000	Set
		5	Velocity hysteresis	16	UINT	100	0	20.000	Set
		6	Limit value range start	32	DINT	0	-999.999	999.999	Set
		7	Limit value range end	32	DINT	0	-999.999	999.999	Set
		8	Limit value status	8	BYTE	0	0	1	Get
		9	Limit value comparison	8	BYTE	0	0	1	Get

Each of the described attributes applies for instances 1 - 4

9.10.7.1 Velocity limit value - enable

Attribute 1

The attribute activates the corresponding velocity monitoring.

0 = not active
1 = active

9.10.7.2 Velocity limit value - switching type

Attribute 2

The attribute specifies whether a check should be performed to determine whether the velocity limit value is exceeded or not met (attributes 3 and 4).

0 = check whether value is exceeded
1 = check whether value is not met

9.10.7.3 Velocity limit value - direction selection

Attribute 3

The attribute specifies whether the velocity check is to be direction dependent or direction independent.

If a direction-dependent limit value check is activated via attribute 2, the values of range start and range end also define the direction. The check is always performed from range start to range end. For example, if the range start is "5500" and the range end is "5000", the direction-dependent check is only performed in the direction from "5500" to "5000". The limit value is not active in the opposite direction.

If the check is independent of direction, the order of range start and range end is irrelevant.

If the value is exceeded or not met, the limit value status (attribute 7) and, if applicable, the output are set via class 103, instance 1 or 2, attribute 3 depending on the selected switching mode.

0 = direction independent
1 = direction dependent

9.10.7.4 Velocity limit value - velocity limit value

Attribute 4

The limit value configured in attribute 3 is compared to the measured ACTUAL velocity. The entry is made in mm/s or inch/100 s.

9.10.7.5 Velocity limit value - velocity hysteresis

Attribute 5

Attribute 4 describes the switching hysteresis for the value entered in attribute 3 to prevent bouncing of the signal. The entry is made in mm/s or inch/100 s.

9.10.7.6 Velocity limit value - limit value range start

Attribute 6

The limit value is monitored beginning at this position. The value is specified in mm or inch/100.

If the values for range start and range end are the same, velocity monitoring is not activated.

9.10.7.7 Velocity limit value - limit value range end

Attribute 7

The limit value is monitored beginning at this position. The value is specified in mm or inch/100.

If the values for range start and range end are the same, velocity monitoring is not activated.

9.10.7.8 Velocity limit value - limit value status

Attribute 8

The attribute signals that the configured limit values have been exceeded.

0 = limit values maintained
1 = limit values exceeded.

9.10.7.9 Velocity limit value - limit value comparison

Attribute 9

The attribute indicates whether the respective velocity limit value is compared with the configured limit value.

0 = comparison inactive
1 = comparison active

10 Diagnostics and troubleshooting

10.1 Service and diagnostics in the display of the AMS 358*i*

In the main menu of the AMS 358*i*, expanded "Diagnostics" can be called up under the Service heading.

```
Service
 Status messages
 Diagnostics
 Expanded diagnostics
```

From the Service main menu, press the enter button to access the underlying menu level.

Use the up/down buttons to select the corresponding menu item in the selected level; use the enter button to activate the selection.

Return from any sub-level to the next-higher menu item by pressing the ESC button.

10.1.1 Status messages

The status messages are written in a ring memory with 25 positions. The ring memory is organized according to the FIFO principle. No separate activation is necessary for storing the status messages. Power OFF clears the ring memory.

```
Status messages
1: - / - / -
2: - / - / -
3: - / - / -
```

Basic representation of the status messages

n: Type / No. / 1

Meaning:

n:	memory position in the ring memory
Type:	type of message: **I** = info, **W** = warning, **E** = error, **F** = severe system error
No:	internal error detection
1:	frequency of the event (always "1", since no summation occurs)

The status messages within the ring memory are selected with the up/down buttons . The enter button can be used to call up **detailed information** on the corresponding status messages with the following details:

Detailed information about a status message

Type: type of message + internal counter

UID: Leuze internal coding of the message

ID: description of the message

Info: not currently used

Within the detailed information, the enter button ↵ can be pressed again to activate an **action menu** with the following functions:

- Acknowledge message
- Delete message
- Acknowledge all
- Delete all

10.1.2 Diagnostics

The diagnostics function is activated by selecting the `Diagnostics` menu item. The ESC button (ESC) deactivates the diagnostics function and clears the contents of the recordings.

The recorded diagnostic data are displayed in 2 fields. In the upper half of the display, status messages of the AMS and the bar graph are displayed. The lower half contains information that assists in a Leuze-internal evaluation.

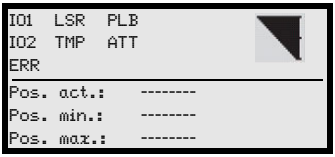

Use the up/down buttons (▲) (▼) to scroll in the bottom half between various displays. The contents of the scrollable pages are intended solely for Leuze for internal evaluation.

The diagnostics have no influence on the communication to the host interface and can be activated during operation of the AMS 358*i*.

10.1.3 Expanded diagnostics

The `Expanded diagnostics` menu item is used for Leuze-internal evaluation.

10.2 General causes of errors

The LEDs for PWR and Net are designed as bicolor LEDs. A change in color from red/green and a static/flashing display facilitate further diagnostics.

After power ON, a test of the Power LED and Net LED is performed in the following sequence:

1. LEDs off.
2. LEDs are switched to green for approx. 0.25 s.

3. LEDs are switched to red for approx. 0.25 s.
4. LEDs off.

This is followed by the status display for the power LED (see chapter 9.3) and the Net LED.

LINK LED for BUS IN and BUS OUT

A green/yellow multicolor LED below the BUS IN and BUS OUT connectors indicates the EtherNet/IP connection status.

●	**Green continuous light**	**LINK LED green** - The link exists, the hardware connection to the next connected participant is OK.
☀	**Flashing yellow**	**LINK LED flashes yellow** - Data is exchanged with the connected participants.

10.2.1 Power LED

See also chapter 8.2.2.

Error	Possible error cause	Measure
PWR LED "OFF"	No supply voltage connected	Check supply voltage.
	Hardware error	Send in device.
PWR-LED "flashes red"	Light beam interruption	Check alignment.
	Plausibility error	Traverse rate >10m/s.
PWR-LED "static red"	Hardware error	For error description, see display, It may be necessary to send in the device.

Table 10.1: General causes of errors

10.3 Interface errors

10.3.1 Net LED

Error	Possible error cause	Measure
Net LED "OFF"	Power off on AMS 358*i*	Check supply voltage.
	No IP address assigned (BootP/DHCP)	Check wiring
	Service operation (parameter enabling activated)	Exiting service operation
Net LED "flashes red"	Time-out in bus communication	AMS 358*i* configured in the control.
Net LED "static red"	Double IP address assignment	Check IP addresses.
Net LED "flashes green"	No communication can be established	Check configuration in the control.
	The AMS 358*i* is not listed in the scan list of the master	
Net LED "flashes green/ red"	The AMS 358i is not assigned to any master.	Check configuration in the control.
	No EtherNet/IP communication present	
	Self test during device start	No measures necessary

Table 10.2: Bus error

10.4 Status display in the display of the AMS 358*i*

Display	Possible error cause	Measure
PLB (implausible measurement values)	Laser beam interruption	Laser spot must always be incident on the reflector.
	Laser spot outside of reflector	Traverse rate < 10m/s?
	Measurement range for maximum distance exceeded	Restrict traversing path or select AMS with larger measurement range.
	Velocity greater than 10m/s	Reduce velocity.
	Ambient temperature far outside of the permissible range (TMP display; PLB)	Select AMS with heating or ensure cooling.
ATT (insufficient received signal level)	Reflector soiled	Clean reflector or glass lens.
	Glass lens of the AMS soiled	
	Performance reduction due to snow, rain, fog, condensing vapor, or heavily polluted air (oil mist, dust)	Optimize usage conditions.
	Laser spot only partially on the reflector	Check alignment.
	Protective foil on the reflector	Remove protective foil from reflector.

Display	Possible error cause	Measure
TMP (operating temperature outside of specification)	Ambient temperatures outside of the specified range	In case of low temperatures, remedy may be an AMS with heating. If temperatures are too high, provide cooling or change mounting location.
LSR Laser diode warning	Laser diode prefailure message	Send in device at next possible opportunity to have laser diode replaced. Have replacement device ready.
ERR Hardware error.	Indicates an uncorrectable error in the hardware	Send in device for repair.

Notice!

*Please use **chapter 10 as a master copy** should servicing be required.*
Cross the items in the "Measures" column which you have already examined, fill out the following address field and fax the pages together with your service contract to the fax number listed below.

Customer data (please complete)

Device type:	
Company:	
Contact partner / department:	
Phone (direct):	
Fax:	
Street / No:	
ZIP code/City:	
Country:	

Leuze Service fax number:

+49 7021 573 - 199

11 Type overview and accessories

11.1 Type key

AMS 3xx *i* yyy H

Heating option	H =	With heating
Sensing distance	40	Max. operating range in m
	120	Max. operating range in m
	200	Max. operating range in m
	300	Max. operating range in m
	i =	Integrated fieldbus technology
Interface	00	RS 422/RS 232
	01	RS 485
	04	PROFIBUS DP / SSI
	08	TCP/IP
	35	CANopen
	38	EtherCAT
	48	PROFINET RT
	55	DeviceNet
	58	Ethernet/IP
	84	Interbus
	AMS	**A**bsolute **M**easuring **S**ystem

11.2 Type overview AMS 358*i* (EtherNet/IP)

Type designation	Description	Part no.
AMS 358*i* 40	40 m operating range, EtherNet/IP interface	50113725
AMS 358*i* 120	120 m operating range, EtherNet/IP interface	50113726
AMS 358*i* 200	200 m operating range, EtherNet/IP interface	50113727
AMS 358*i* 300	300 m operating range, EtherNet/IP interface	50113728
AMS 358*i* 40 H	40 m operating range, EtherNet/IP interface, integrated heating	50113729
AMS 358*i* 120 H	120 m operating range, EtherNet/IP interface, integrated heating	50113730
AMS 358*i* 200 H	200 m operating range, EtherNet/IP interface, integrated heating	50113731
AMS 358*i* 300 H	300 m operating range, EtherNet/IP interface, integrated heating	50113732

Table 11.1: Type overview AMS 358*i*

11.3 Overview of reflector types

Type designation	Description	Part no.
Reflective tape 200x200-S	Reflective tape, 200x200mm, self-adhesive	50104361
Reflective tape 500x500-S	Reflective tape, 500x500mm, self-adhesive	50104362
Reflective tape 914x914-S	Reflective tape, 914x914mm, self-adhesive	50108988
Reflective tape 200x200-M	Reflective tape, 200x200mm, affixed to aluminum plate	50104364
Reflective tape 500x500-M	Reflective tape, 500x500mm, affixed to aluminum plate	50104365
Reflective tape 914x914-M	Reflective tape, 914x914mm, affixed to aluminum plate	50104366
Reflective tape 200x200-H	Heated reflective tape, 200 x 200mm	50115020
Reflective tape 500x500-H	Heated reflective tape, 500 x 500mm	50115021
Reflective tape 914x914-H	Heated reflective tape, 914 x 914mm	50115022

Table 11.2: Overview of reflector types

11.4 Accessories

11.4.1 Accessory mounting bracket

Type designation	Description	Part no.
MW OMS/AMS 01	Mounting bracket for mounting the AMS 358*i* to horizontal surfaces	50107255

Table 11.3: Accessory mounting bracket

11.4.2 Accessory deflector unit

Type designation	Description	Part no.
US AMS 01	Deflector unit with integrated mounting bracket for the AMS 358*i*. Variable 90° deflection of the laser beam in various directions	50104479
US 1 OMS	Deflector unit without mounting bracket for simple 90° deflection of the laser beam	50035630

Table 11.4: Accessory deflector unit

11.4.3 Accessory M12 connector

Type designation	Description	Part no.
S-M12A-ET	M12 connector, Ethernet, D-coded, BUS IN, BUS OUT	50112155
KDS ET M12/RJ45 W - 4P	Converter from M12 D-coded to RJ45 socket	50109832
KD 095-5A	M12 connector, A-coded socket, Power (PWR)	50020501

Table 11.5: Accessory M12 connector

11.4.4 Accessory ready-made cables for voltage supply

Contact assignment/wire color of PWR connection cable

PWR connection cable (5-pin socket, A-coded)			
PWR 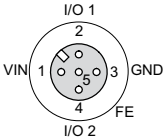 **M12 socket (A-coded)**	**Pin**	**Name**	**Core color**
	1	VIN	**brown**
	2	I/O 1	**white**
	3	GND	**blue**
	4	I/O 2	**black**
	5	FE	**gray**
	Thread	FE	**bare**

Specifications of the cables for voltage supply

Operating temperature range in rest state: -30°C … +70°C
in motion: -5°C … +70°C

Material sheathing: PVC

Bending radius > 50 mm

Order codes of the cables for voltage supply

Type designation	Description	Part no.
K-D M12A-5P-5m-PVC	M12 socket, A-coded, axial plug outlet, open cable end, cable length 5 m	50104557
K-D M12A-5P-10m-PVC	M12 socket, A-coded, axial plug outlet, open cable end, cable length 10 m	50104559

11.4.5 Accessory ready-made cables for EtherNet/IP

General

- Cable **KB ET...** for connecting to EtherNet/IP via M12 connector
- Standard cable available in lengths from 2 … 30m
- Special cables on request.

Contact assignments M12 EtherNet/IP connection cable KB ET...

M12 EtherNet/IP connection cable (4-pin connector, D-coded, on both sides)			
EtherNet 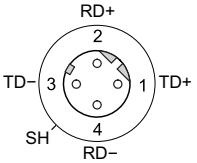 **M12 connector (D-coded)**	**Pin**	**Name**	**Core color**
	1	TD+	**yellow**
	2	RD+	**white**
	3	TD-	**orange**
	4	RD-	**blue**
	SH (thread)	FE	**bare**

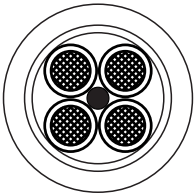

Core colors

WH
YE
BU
OG

Conductor class: VDE 0295, EN 60228, IEC 60228 (Class 5)

Accessories M12 EtherNet/IP connection cable, open cable end

Cable designation: KB ET - … - SA

Accessories M12 EtherNet/IP connection cable with both-sided D-coded M12 plug

Cable designation: KB ET - … - SSA

Accessories EtherNet/IP connection cable, M12-/RJ45

Cable designation: KB ET - … - SA-RJ45

Notice for connecting the EtherNet/IP interface!

The entire connection cable must be shielded. The shielding connection must be at the same potential on both ends of the data line. This prevents potential compensating currents over the shield and possible interference coupling by compensating currents. The signal lines must be stranded in pairs.
Use CAT 5 cable for the connection.

Specifications of the EtherNet/IP connection cable

Operating temperature range	in rest state: -50°C … +80°C in motion: -25°C … +80°C in motion: -25°C … +60°C (when used with drag chains)
Material	cable sheath: PUR (green), wire insulation: PE foam, free of halogens, silicone and PVC
Bending radius	> 65 mm, suitable for drag chains
Bending cycles	> 10^6, perm. acceleration < 5 m/s^2

Order code for EtherNet/IP connection cable

Type designation	Description	Part no.
M12 plug for BUS IN, axial connector, open cable end		
KB ET - 1000 - SA	Cable length 1 m	50106738
KB ET - 2000 - SA	Cable length 2 m	50106739
KB ET - 5000 - SA	Cable length 5 m	50106740
KB ET - 10000 - SA	Cable length 10 m	50106741
KB ET - 15000 - SA	Cable length 15 m	50106742
KB ET - 20000 - SA	Cable length 20 m	50106743
KB ET - 25000 - SA	Cable length 25 m	50106745
KB ET - 30000 - SA	Cable length 30 m	50106746
M12 plug for BUS IN to RJ-45 connector		
KB ET - 1000 - SA-RJ45	Cable length 1 m, cable 1:1, not crossed	50109879
KB ET - 2000 - SA-RJ45	Cable length 2 m, cable 1:1, not crossed	50109880
KB ET - 5000 - SA-RJ45	Cable length 5 m, cable 1:1, not crossed	50109881
KB ET - 10000 - SA-RJ45	Cable length 10 m, cable 1:1, not crossed	50109882
KB ET - 15000 - SA-RJ45	Cable length 15 m, cable 1:1, not crossed	50109883
KB ET - 20000 - SA-RJ45	Cable length 20 m, cable 1:1, not crossed	50109884
KB ET - 25000 - SA-RJ45	Cable length 25 m, cable 1:1, not crossed	50109885
KB ET - 30000 - SA-RJ45	Cable length 30 m, cable 1:1, not crossed	50109886
M12 plug + M12 plug for BUS OUT to BUS IN		
KB ET - 1000 - SSA	Cable length 1 m	50106898
KB ET - 2000 - SSA	Cable length 2 m	50106899
KB ET - 5000 - SSA	Cable length 5 m	50106900
KB ET - 10000 - SSA	Cable length 10 m	50106901
KB ET - 15000 - SSA	Cable length 15 m	50106902
KB ET - 20000 - SSA	Cable length 20 m	50106903
KB ET - 25000 - SSA	Cable length 25 m	50106904
KB ET - 30000 - SSA	Cable length 30 m	50106905

12 Maintenance

12.1 General maintenance information

With normal use, the laser measurement system does not require any maintenance by the operator.

Cleaning

In the event of dust build-up or if the (ATT) warning message is displayed, clean the device with a soft cloth; use a cleaning agent (commercially available glass cleaner) if necessary.

Also check the reflector for possible soiling.

Attention!

Do not use solvents and cleaning agents containing acetone. Use of such solvents could blur the reflector, the housing window and the display.

12.2 Repairs, servicing

Attention!

Access to or changes on the device, except where expressly described in this operating manual, are not authorized.
The device must not be opened. Failure to comply will render the guarantee void. Warranted features cannot be guaranteed after the device has been opened.

Repairs to the device must only be carried out by the manufacturer.

↳ *Contact your Leuze distributor or service organization should repairs be required. The addresses can be found on the inside of the cover and on the back.*

Notice!

When sending the laser measurement systems to Leuze electronic for repair, please provide an accurate description of the error.

12.3 Disassembling, packing, disposing

Repacking

For later reuse, the device is to be packed so that it is protected.

Notice!

Electrical scrap is a special waste product! Observe the locally applicable regulations regarding disposal of the product.

A

Accessories 99
Accessory deflector unit 100
Accessory mounting bracket 100
Accessory ready-made cables 101
Accuracy 17
Activation for inputs 86
Activation for outputs 87
Activation output (dynamic output) 88
Adapter (device class) 60
Addressing 58
Air humidity 18
Alarm flag 80
Alignment 23

B

BootP 14

C

Cleaning 104
Configuration Consistency Value 76
Configure the config assembly 16
Connections
  EtherNet/IP BUS IN 41
  EtherNet/IP BUS OUT 42
  PWR IN 41
  Service 42
Contrast 85
Control buttons 47
Control panel 43

D

Declaration of conformity 5
Definition of input/output 86
Deflector unit
  Maximum ranges 27
  With integrated mounting bracket 27
  Without mounting bracket 29
Deflector unit US 1 OMS
  Dimensioned drawing 29
Deflector unit US AMS 01
  Dimensioned drawing 28
Description of functions 6
Device type 75
DHCP 14
Diagnostics 94
Dimensioned drawing of AMS 3xxi 19
Direction counting 78
Direction of movement 83
Display 43

E

EDS file 60, 62
  Detailed description 69
Electrical connection 40
  Safety notices 40
Entering network address 58
Error delay - position 89
Error delay - position status 89
Error delay - velocity 90
Error delay - velocity status 90
Error delay time - position 89
Error delay time - velocity 90
EtherNet/IP device class 60
EtherNet/IP interface 56
Expanded diagnostics 95
Explanation of symbols 5
Explicit messages 56
Extended heating control 85

F

Fast commissioning 12
Free resolution 83
Function assignment of the hardware outputs 87
Function assignment of the inputs 86

G

General causes of errors 95

H

Heartbeat Interval 76
Heated reflectors
  Dimensioned drawing 34
  Specifications 33

I
Illumination 85
Implicit messages 56
Input function status 87
Installation 21
Interface errors 97
Interface info in display 44
Internal hardware error 44

L
Language selection 84
Laser diode laser control 84
Laser diode laser status 84
LED LINK 46
LSR status display 98

M
Main menu
  Device information 48
  Language selection 48
  Network information 48
  Parameter 48
  Service 48
Maintenance 104
Measurement range 17
Measurement value output 17
Menus
  Language selection menu 52
  Main menu 48
  Parameter menu 49
  Service menu 53
Mounting 22
  with laser beam deflector unit 27
Mounting bracket(optional) 24
Mounting distances 25
Movement status 83

N
Name plates 21
Net LED 46

O
Offset value 83
Operating principle 12
Operating status - direction counting 79
Operating temperature 18
Operating time 81
Operation 43, 53
Output function status 88
Overview of reflector types 100

P
Packaging 21
Parameter enabling 53, 54
Parameter menu
  Ethernet/IP 49
  I/O 51
  Maximum position value 50
  Other 52
  Parameter handling 49
Password 85
Password protection 84
Plausibility error 44
Position format 78
Position sensor type 78
Position value 77
Position value in the case of error 89
Prefailure message 43
Preset reset 82
Preset status 82
Preset teach 82
Preset toggle 82
Preset value 82
Product code 75
Product name 76
PWR LED 45

Q
Quality assurance 5

R
Received signal 44
Reflective tape
  Dimensioned drawing 32
  Specifications 31
Reflector 30
  Mounting 36
  Pitch 39

Size 35
Type overview 35
Repair 104
Revision 75

S

Sensing distance 99
Serial number 76
Servicing 104
Specifications 17
Dimensioned drawing 19
General specifications 17
Reflective tapes 30
State 76
Status 75
Status and measurement data - main menu 48
Status- and warning messages 43
Status display 43
ATT 97
ERR 98
PLB 97
TMP 98
Status display in the display 97
Status displays 45
Status messages 94
Storage 21
Storage temperature 18
Supply voltage 17
Supported alarm 80
Supported warnings 81
Surface reflections 37
Symbols 5

T

Temperature monitoring 43
Topology 58
Transfer the data to the control 15
Transport 21
Troubleshooting 94
Type overview 20, 99

U

Using explicit messaging services 16

V

Velocity format 79
Velocity free resolution 79
Velocity in the case of failure 89
Velocity limit value
Direction selection 92
Enable 91
Switching mode 92
Velocity hysteresis 92
Velocity limit value 92
Velocity value 78
Vendor ID 75

W

Warning flag 81
Warnings 81

Level 1 ▲▼ : selection	Level 2 ▲▼ : selection ESC : back	Level 3 ▲▼ : selection ESC : back	Level 4 ▲▼ : selection ESC : back	Level 5 ▲▼ : selection ESC : back	Selection/configuration option ▲▼ : selection ↵ : activate ESC : back	Detailed information on
Device information						page 46
Network information						page 46
Status- and measurement data						page 46
Parameter ↵	Parameter handling	↵ Parameter enabling			ON / OFF	page 47
		↵ Password	↵ Activate password		ON / OFF	
			↵ Password entry		Configuration option of a four-digit numerical password	
		↵ Parameters to default			All parameters are reset to their factory settings	
↵	EtherNet/IP	↵ Activation			ON / OFF	page 47
		↵ EtherNet interface	↵ Address		Address of the AMS 358*i*	
			↵ Gateway		Gateway for the AMS 358*i*	
			↵ Net mask		Net mask for the subnet of the AMS 358*i*	
			↵ DHCP activated		ON / OFF	
			↵ BootP activated		ON / OFF	
↵	Position value	↵ Measurement unit			Metric/Inch	page 48
		↵ Count direction			Positive/Negative	
		↵ Offset			Value input:	
		↵ Preset			Value input	
		↵ Error delay			ON / OFF	
		↵ Position value in the case of error			Last valid value / zero	
		↵ Free resolution value			5 …50000	
↵	I/O	↵ I/O 1	↵ Port configuration		Input/Output	page 49
			↵ Switching input	↵ Function	No function/preset teach/laser ON/OFF	
				↵ Activation	Low active/High active	
			↵ Switching output	↵ Function	Pos. limit value 1 / pos. limit value 2 / speed / intensity (ATT) / temp. (TMP) / laser (LSR) / plausibility (PLB) / hardware (ERR)	
				↵ Activation	Low active/High active	
		↵ I/O 2	↵ Port configuration		Input/Output	
			↵ Switching input	↵ Function	No function/preset teach/laser ON/OFF	
				↵ Activation	Low active/High active	
			↵ Switching output	↵ Function	Pos. limit value 1 / pos. limit value 2 / speed / intensity (ATT) / temp. (TMP) / laser (LSR) / plausibility (PLB) / hardware (ERR)	
				↵ Activation	Low active/High active	

			Limit values	Upper pos. limit 1	Activation	ON / OFF	
					Limit value input	Value input in mm or inch/100	
				Lower pos. limit 1	Activation	ON / OFF	
					Limit value input	Value input in mm or inch/100	
				Upper pos. limit 2	Activation	ON / OFF	
					Limit value input	Value input in mm or inch/100	
				Lower pos. limit 2	Activation	ON / OFF	
					Limit value input	Value input in mm or inch/100	
		Other	Heating control			Standard/extended (10°C … 15°C/30°C … 35°C)	page 50
			Display background			10 minutes/ON	
			Display contrast			Weak/Medium/Strong	
			Service RS232	Baud rate		57.6 kbit/s / 115.2 kbit/s	
				Format		8,e,1 / 8,n,1	
Language selection						Deutsch / English / Español / Français / Italiano	page 50
Service		Status messages					page 51
		Diagnostics				Exclusively for service purposes by Leuze electronic	
		Expanded diagnostics				Exclusively for service purposes by Leuze electronic	