Leuze electronic

the sensor people

AMS 355*i*

Optical Laser Measurement System DeviceNet

en 03-2014/12 50113345
We reserve the right to make technical changes

TECHNICAL DESCRIPTION

ПРОМЭЛЕКТРОНИКА / sales@prom-elec.com

© 2014
Leuze electronic GmbH + Co. KG
In der Braike 1
D-73277 Owen - Teck / Germany
Phone: +49 7021 573-0
Fax: +49 7021 573-199
http://www.leuze.com
info@leuze.de

The main menus

```
AMS 355i 120
Leuze electronic
      GmbH & Co. KG
SW: V 1.3.0   HW:1
SN: ----------------------
```

Device information - main menu

This menu item contains detailed information on
- device type,
- manufacturer,
- software and hardware version,
- serial number.

No entries can be made via the display.

```
Network information
Address:    --
Baudrate:   ---- kbit/s
Status:     Not Powered,...
```

Network information - main menu

Explanations of address, baud rate, status.
No entries can be made via the display.

```
IO1 LSR PLB        63
IO2 TMP ATT        DNET
ERR

  + 87.000m
```

Status- and measurement data - main menu

- Display of status-, warning-, and error messages.
- Status overview of the switching inputs/outputs.
- Bar graph for the reception level.
- Activated interface.
- Measurement value.

No entries can be made via the display.
See "Indicators in the display" on page 38.

```
Parameter
  Parameter handling
  DeviceNet
  Position value
  I/O
  Other
```

Parameter - main menu

- Configuration of the AMS

See "Parameter menu" on page 44.

```
Language selection
o Deutsch
● English
o Español
o Français
o Italiano
```

Language selection - main menu

- Selection of the display language.

See "Language selection menu" on page 47.

```
Service
  Status messages
  Diagnostics
  Expanded diagnostics
```

Service - main menu

- Display of status messages.
- Display of diagnostic data.

No entries can be made via the display.
See "Service menu" on page 47.

Device buttons:

- Navigate **upward/laterally**
- Navigate **downward/laterally**
- **ESCAPE** leave
- **ENTER** confirm

Input of values

```
100
 <-0123456789     save
Standard ----- Unit
   63  |    |
```

- ◄ + ↵ **Delete character**
- 0...9 + ↵ **Enter digit**
- save + ↵ **Save input**

1 General information 5
1.1 Explanation of symbols 5
1.2 Declaration of conformity 5
1.3 Description of functions AMS 355*i* 6

2 Safety 7
2.1 Intended use 7
2.2 Foreseeable misuse 8
2.3 Competent persons 8
2.4 Disclaimer 9
2.5 Laser safety notices 9

3 Fast commissioning / operating principle 12
3.1 Mounting the AMS 355*i* 12
3.1.1 Mounting the device 12
3.1.2 Mounting the reflector 12
3.2 Connecting the voltage supply 13
3.3 Display 13
3.4 AMS 355*i* on the DeviceNet 13

4 Specifications 14
4.1 Specifications of the laser measurement system 14
4.1.1 General specifications AMS 355*i* 14
4.1.2 Dimensioned drawing AMS 355*i* 16
4.1.3 Type overview AMS 355*i* 17

5 Installation and mounting 18
5.1 Storage, transportation 18
5.2 Mounting the AMS 355*i* 19
5.2.1 Optional mounting bracket 21
5.2.2 Parallel mounting of the AMS 355*i* 22
5.2.3 Parallel mounting of AMS 355*i* and DDLS optical data transmission 23
5.3 Mounting the AMS 355*i* with laser beam deflector unit 24
5.3.1 Mounting the laser beam deflector unit With integrated mounting bracket 24
5.3.2 Dimensioned drawing of US AMS 01 deflector unit 25
5.3.3 Mounting the US 1 OMS deflector unit without mounting bracket 26

6 Reflectors 27

6.1 General information 27

6.2 Description of the reflective tape 27
6.2.1 Specifications of the self-adhesive foil 28
6.2.2 Specifications of the reflective tape on a metal plate 28
6.2.3 Dimensioned drawing of reflective tape on a metal plate 29
6.2.4 Specifications of heated reflectors 30
6.2.5 Dimensioned drawing of heated reflectors 31

6.3 Selecting reflector sizes 32

6.4 Mounting the reflector 33
6.4.1 General information 33
6.4.2 Mounting the reflector 33
6.4.3 Table of reflector pitches 36

7 Electrical connection 37

7.1 Safety notices for the electrical connection 37

7.2 PWR – voltage supply / switching input/output 38

7.3 DeviceNet BUS IN 38

7.4 DeviceNet BUS OUT 39

7.5 Service 39

8 Display and control panel AMS 355*i* 40

8.1 Structure of the control panel 40

8.2 Status display and operation 40
8.2.1 Indicators in the display 40
8.2.2 LED status displays 42
8.2.3 Control buttons 43

8.3 Menu description 44
8.3.1 The main menus 44
8.3.2 Parameter menu 46
8.3.3 Language selection menu 49
8.3.4 Service menu 49

8.4 Operation 49

9 DeviceNet interface 52

9.1 General information on DeviceNet 52
9.1.1 Topology 52

9.1.2 Communication 54

9.2 DeviceNet electrical connection 55

9.3 Electrical data for the supply voltage – Data V+ and Data V- 56

9.4 DeviceNet address entry - MAC ID 56
9.4.1 Entering the MAC ID (address) via the display 56

9.5 EDS file - general info 57

9.6 EDS file - detailed description 59
9.6.1 Class 4 Assembly 59
9.6.2 Class 1 Identity object 62
9.6.3 Class 35 Position sensor object 64
9.6.4 Class 100 Display configuration 71
9.6.5 Class 101 Selection assembly 72
9.6.6 Class 103 Switching inputs/outputs 74
9.6.7 Class 104 Behavior in the case of error 77
9.6.8 Class 105 Velocity monitoring 79

10 Diagnostics and troubleshooting 82

10.1 Service and diagnostics in the display of the AMS 355*i* 82
10.1.1 Status messages 82
10.1.2 Diagnostics 83
10.1.3 Expanded diagnostics 83

10.2 General causes of errors 83
10.2.1 Power LED 84

10.3 Interface errors 84
10.3.1 Net LED 84

10.4 Status display in the display of the AMS 355*i* 85

11 Type overview and accessories 87

11.1 Type key 87

11.2 type overview AMS 355*i* (DeviceNet) 87

11.3 Overview of reflector types 88

11.4 Accessories 88
11.4.1 Accessory mounting bracket 88
11.4.2 Accessory deflector unit 88
11.4.3 Accessory M12 connector 88
11.4.4 Accessory terminating resistor 89
11.4.5 Accessory ready-made cables for voltage supply 89
11.4.6 Accessory ready-made cables for DeviceNet 90

12 Maintenance 92

12.1 General maintenance information 92

12.2 Repairs, servicing 92

12.3 Disassembling, packing, disposing 92

1 General information

1.1 Explanation of symbols

The symbols used in this operating manual are explained below.

Attention!

This symbol precedes text messages which must strictly be observed. Failure to comply with this information results in injuries to personnel or damage to the equipment.

Attention Laser!

This symbol warns of possible danger caused by hazardous laser radiation.

Notice!

This symbol indicates text passages containing important information.

1.2 Declaration of conformity

The AMS 355*i* absolute measuring optical laser measurement system was designed and manufactured in accordance with applicable European directives and standards.

The AMS series is "UL LISTED" according to American and Canadian safety standards and fulfills the requirements of Underwriter Laboratories Inc. (UL).

Notice!

The Declaration of Conformity for these devices can be requested from the manufacturer.

The manufacturer of the product, Leuze electronic GmbH + Co. KG in D-73277 Owen/Teck, possesses a certified quality assurance system in accordance with ISO 9001.

1.3 Description of functions AMS 355*i*

The AMS 355*i* optical laser measurement system calculates distances to fixed as well as moving system parts. The distance to be measured is calculated according to the principle of the propagation time of radiated light. Here, the light emitted by the laser diode is reflected by a reflector onto the receiving element of the laser measurement system. The AMS 355*i* uses the "propagation time" of the light to calculate the distance to the reflector. The high absolute measurement accuracy of the laser measurement system and the fast integration time are designed for position control applications.

With the AMS 3xx*i* product series, Leuze electronic makes available a range of internationally relevant interfaces. Note that each interface version listed below corresponds to a different AMS 3xx*i* model.

PROFIBUS, SSI	**AMS 304*i***
PROFINET	**AMS 348*i***
DeviceNet	**AMS 355*i***
EtherNet/IP	**AMS 358*i***
CANopen	**AMS 335*i***
EtherCAT	**AMS 338*i***
Ethernet	**AMS 308*i***
INTERBUS	**AMS 384*i***
RS485	**AMS 301*i***
RS232, RS422	**AMS 300*i***

2 Safety

This sensor was developed, manufactured and tested in line with the applicable safety standards. It corresponds to the state of the art.

2.1 Intended use

The AMS is an absolute measuring optical laser measurement system which allows distance measurement of up to 300m against a reflector.

Areas of application

The AMS is designed for the following areas of application:

- Positioning of automated, moving plant components
- Travel and lifting axes of high-bay storage devices
- Repositioning units
- Gantry crane bridges and their trolleys
- Lifts
- Electroplating plants

CAUTION

Observe intended use!

- Only operate the device in accordance with its intended use. The protection of personnel and the device cannot be guaranteed if the device is operated in a manner not complying with its intended use.
  Leuze electronic GmbH + Co. KG is not liable for damages caused by improper use.
- Read the technical description before commissioning the device. Knowledge of this technical description is an element of proper use.

NOTICE

Comply with conditions and regulations!

- Observe the locally applicable legal regulations and the rules of the employer's liability insurance association.

Attention

For UL applications, use is permitted exclusively in Class 2 circuits according to NEC (National Electric Code).

2.2 Foreseeable misuse

Any use other than that defined under "Intended use" or which goes beyond that use is considered improper use.

In particular, use of the device is not permitted in the following cases:

- Rooms with explosive atmospheres
- Circuits relevant to safety
- For medicinal purposes

NOTICE
Do not modify or otherwise interfere with the device. ↳ Do not carry out modifications or otherwise interfere with the device. The device must not be tampered with and must not be changed in any way. The device must not be opened. There are no user-serviceable parts inside. Repairs must only be performed by Leuze electronic GmbH + Co. KG.

2.3 Competent persons

Connection, mounting, commissioning and adjustment of the device must only be carried out by competent persons.

Prerequisites for competent persons:

- They have a suitable technical education.
- They are familiar with the rules and regulations for occupational safety and safety at work.
- They are familiar with the technical description of the device.
- They have been instructed by the responsible person on the mounting and operation of the device.

Certified electricians

Electrical work must be carried out by a certified electrician.

Due to their technical training, knowledge and experience as well as their familiarity with relevant standards and regulations, certified electricians are able to perform work on electrical systems and independently detect possible dangers.

In Germany, certified electricians must fulfill the requirements of accident-prevention regulations BGV A3 (e.g. electrician foreman). In other countries, there are respective regulations that must be observed.

2.4 Disclaimer

Leuze electronic GmbH + Co. KG is not liable in the following cases:

- The device is not being used properly.
- Reasonably foreseeable misuse is not taken into account.
- Mounting and electrical connection are not properly performed.
- Changes (e.g., constructional) are made to the device.

2.5 Laser safety notices

ATTENTION LASER RADIATION – LASER CLASS 2

Never look directly into the beam!

The device satisfies the requirements of IEC 60825-1:2007 (EN 60825-1:2007) safety regulations for a product in **laser class 2** as well as the U.S. 21 CFR 1040.10 regulations with deviations corresponding to "Laser Notice No. 50" from June 24th, 2007.

- Never look directly into the laser beam or in the direction of reflecting laser beams.
  If you look into the beam path over a longer time period, there is a risk of injury to the retina.
- Do not point the laser beam of the device at persons!
- Interrupt the laser beam using a non-transparent, non-reflective object if the laser beam is accidentally directed towards a person.
- When mounting and aligning the device, avoid reflections of the laser beam off reflective surfaces!
- CAUTION! The use of operating or adjusting devices other than those specified here or carrying out of differing procedures may lead to dangerous exposure to radiation.
- Adhere to the applicable legal and local regulations regarding protection from laser beams.
- The device must not be tampered with and must not be changed in any way.
  There are no user-serviceable parts inside the device.
  Repairs must only be performed by Leuze electronic GmbH + Co. KG.

NOTICE

Affix laser information and warning signs!

Laser information and warning signs are attached to the device (see figure 2.1):

In addition, self-adhesive laser warning and information signs (stick-on labels) are supplied in several languages (see figure 2.2).

- Affix the laser information sheet to the device in the language appropriate for the place of use.
  When using the device in the US, use the stick-on label with the "Complies with 21 CFR 1040.10" notice.
- Affix the laser information and warning signs near the device if no signs are attached to the device (e.g., because the device is too small) or if the attached laser information and warning signs are concealed due to the installation position.
  Affix the laser information and warning signs so that they are legible without exposing the reader to the laser radiation of the device or other optical radiation.

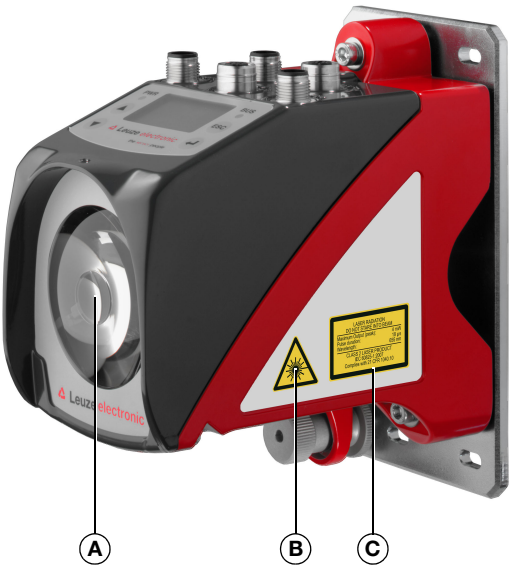

A Laser aperture
B Laser warning sign
C Laser information sign with laser parameters

Figure 2.1: Laser apertures, laser warning signs

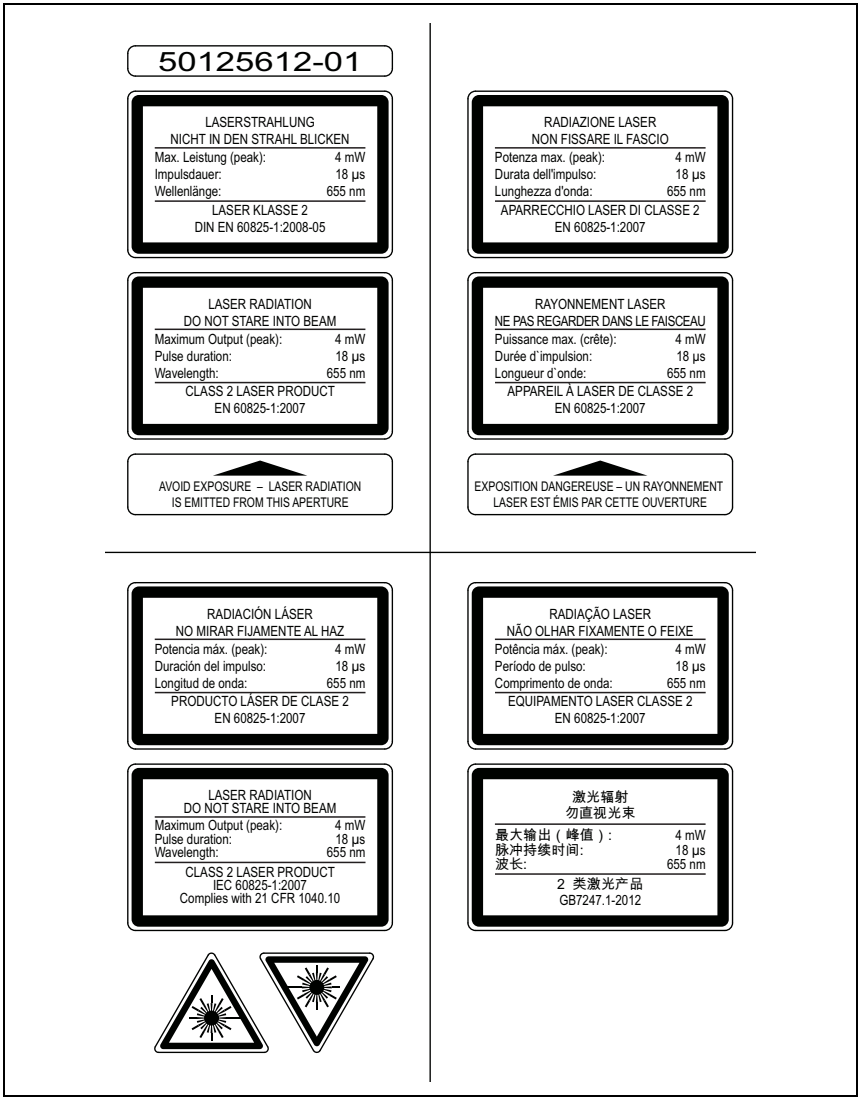

Figure 2.2: Laser warning and information signs – supplied stick-on labels

3 Fast commissioning / operating principle

Notice!

*Below, you will find a **short description for the initial commissioning** of the AMS 355i. Detailed explanations for the listed points can be found throughout the handbook.*

3.1 Mounting the AMS 355*i*

The AMS 355*i* and the corresponding reflector are mounted on two mutually opposing, plane-parallel, flat walls.

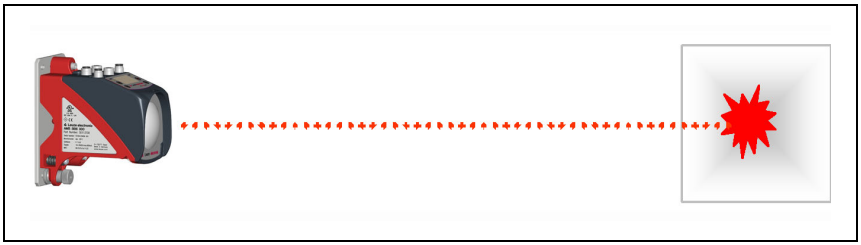

Figure 3.1: Schematic illustration of mounting

Attention!

For error-free position measurement, there must be an unobstructed line-of-sight between the AMS 355*i and the reflector.*

3.1.1 Mounting the device

The laser is mounted on a vertical wall using 4 screws (M5).

Alignment is performed using 2 adjustment screws. Adjust so that the laser light spot is positioned at the center of the reflector. The alignment is to be secured with the knurled nut and locked with the M5 nut.

Further information can be found in chapter 5.2 and chapter 5.3.

3.1.2 Mounting the reflector

The reflector is mounted on a vertical wall with 4 screws (M5). The reflector is angled using the included shims. Incline the reflector by approx. 1°.

Detailed information can be found in chapter 6.4.

3.2 Connecting the voltage supply

The laser measurement system is connected using M12 connectors. The voltage supply is connected via the PWR M12 connection.

Detailed information can be found in chapter 7.

3.3 Display

Once the laser measurement system is supplied with voltage, the device status as well as the measured position values can be read on the display. The display automatically switches to the display of the measurement values.

Use the up/down buttons ▲ ▼ to the left of the display to read and change a wide range of data and parameters.

Depending on connected interface, the network address must be configured via the display.

Detailed information can be found in chapter 8.

3.4 AMS 355*i* on the DeviceNet

Install the EDS file corresponding to the AMS 355*i* … in your planning tool/the control (e.g., RS network).

Notice!

*You can find the EDS file at **www.leuze.com.***

The AMS 355*i* is configured in the planning tool/control by means of the EDS file. If the AMS 355*i* has been assigned an address in the planning tool, the address is to be set on the AMS 355*i* via the control panel/display. Only if the addresses are the same between the AMS 355*i* and the control can communication be established.

After all parameters have been set in the planning tool/control, the download to the AMS 355*i* takes place. The set parameters are now stored on the AMS 355*i*.

Afterwards, all AMS 355*i* parameters should be stored via upload in the control. This aids in retaining the parameters during device exchanges, as they a re now also stored centrally in the control.

Each time a connection is established between the control and the AMS 355*i*, these parameters are now transferred again to the AMS 355*i*. Note that this function must be supported by the control.

The DeviceNet baud rate is defined for the entire network in the planning tool/control.

The baud rate is set on the AMS 355*i* via the control panel/display.

Only if the baud rates are the same is communication with the AMS 355*i* possible.

Detailed information can be found in chapter 9.

4 Specifications

4.1 Specifications of the laser measurement system

4.1.1 General specifications AMS 355*i*

Measurement data	AMS 355*i* 40 (H)	AMS 355*i* 120 (H)	AMS 355*i* 200 (H)	AMS 355*i* 300 (H)
Measurement range	0.2 … 40 m	0.2 … 120 m	0.2 … 200 m	0.2 … 300 m
Accuracy	± 2 mm	± 2 mm	± 3 mm	± 5 mm
Consistency [1]	0.3 mm	0.5 mm	0.7 mm	1.0 mm
Light spot diameter	≤ 40 mm	≤ 100 mm	≤ 150 mm	≤ 225 mm
Measurement value output	1.7 ms			
Integration time	8 ms			
Resolution	adjustable, see chapter of the individual interfaces			
Temperature drift	≤ 0.1 mm/K			
Ambient temperature sensitivity	1 ppm/K			
Air pressure sensitivity	0.3 ppm/hPa			
Traverse rate	≤ 10 m/s			
Electrical data				
Supply voltage Vin [2]	18 … 30 VDC			
Supply voltage data V+	11 … 25 VDC			
Supply voltage data V-	reference potential			
Current consumption AMS 355*i* at Data V+	max. 80 mA at 11 VDC (for supplying the bus transceiver, not for the complete device)			
Current consumption	without device heating: ≤ 250 mA / 24 VDC with device heating: ≤ 500 mA / 24 VDC			
Optical data				
Transmitter	laser diode, red light, wavelength 650 … 690 nm			
Laser class	2 acc. to EN 60825-1, CDRH			
Interfaces				
DeviceNet	125 kbit/s (default) / 250 kbit/s / 500 kbit/s			
Vendor ID	524_{Dec} / $20C_H$			
Device type	34_{Dec} / 22_H (encoder)			
Position sensor type	8_{Dec} / 8_H (absolute encoder)			
Operating and display elements				
Keyboard	4 buttons			
Display	monochromatic graphical display, 128 x 64 pixels			
LED	2 LEDs, two-colored			

Inputs/outputs	
Quantity	2, programmable
Input	protected against polarity reversal
Output	max. 60 mA, short-circuit proof
Mechanical data	
Housing	cast zinc and aluminum
Optics	glass
Weight	approx. 2.45 kg
Protection class	IP 65 acc. to EN 60529 [3]
Environmental conditions	
Operating temperature	
without device heating	-5 °C … +50 °C
with device heating	-30 °C … +50 °C [4]
Storage temperature	-30 °C … +70 °C
Air humidity	max. 90 % rel. humidity, non-condensing
Mechanical/electrical loading capacity	
Vibrations	acc. to EN 60068-2-6
Noise	acc. to EN 60060-2-64
Shock	acc. to EN 60068-2-27
EMC	acc. to EN 61000-6-2 and EN 61000-6-4 [5]

1) Statistical error: 1 sigma; minimum switch-on time: 2 min.
2) For UL applications: only for use in "Class 2" circuits acc. to NEC.
3) With screwed-on M12 plugs or mounted caps.
4) With devices with heating, the switch on/off area of the internal heating can be extended to prevent condensation from forming. A 100% prevention of the formation of condensation cannot be guaranteed due to the limited heating capacity of the AMS 355*i*.
5) This is a Class A product. In a domestic environment this product may cause radio interference, in which case the operator may be required to take adequate measures.

The AMS 355*i* is designed in accordance with safety class III for supply with PELV (protective extra-low voltage).

4.1.2 Dimensioned drawing AMS 355*i*

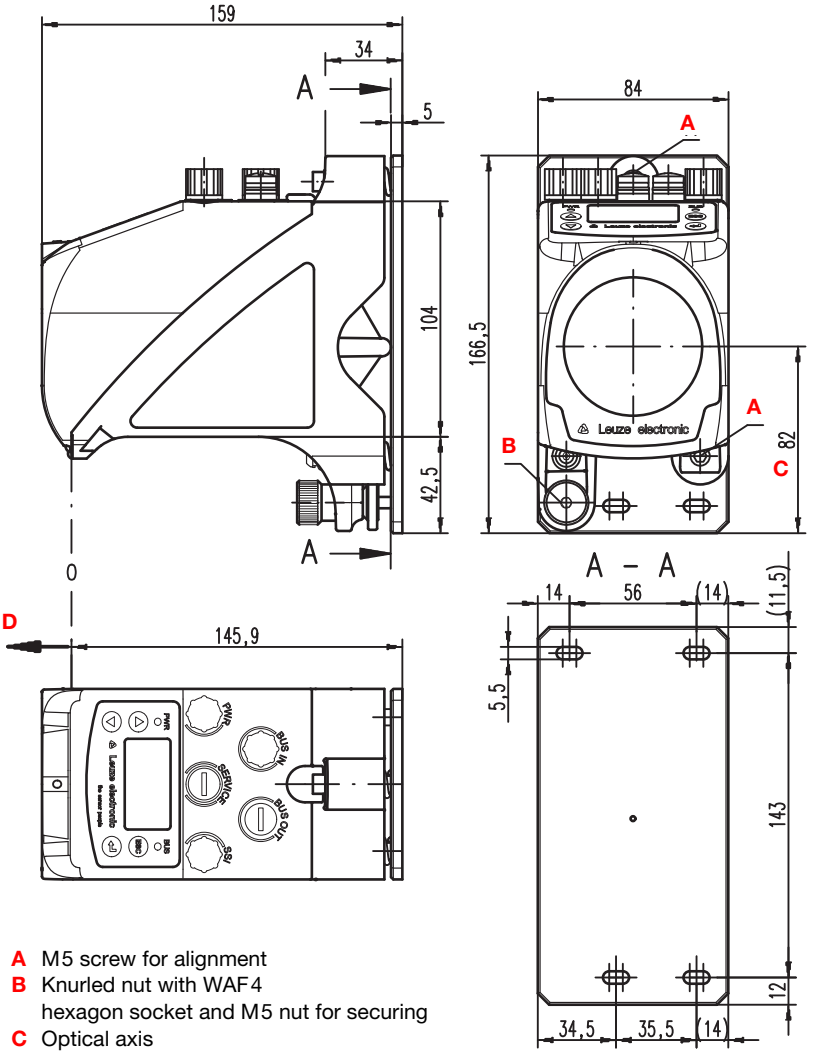

Figure 4.1: Dimensioned drawing AMS 355*i*

4.1.3 Type overview AMS 355*i*

AMS 355i (DeviceNet)

Type designation	Description	Part no.
AMS 355*i* 40	40 m operating range, DeviceNet interface	50113717
AMS 355*i* 120	120 m operating range, DeviceNet interface	50113718
AMS 355*i* 200	200 m operating range, DeviceNet interface	50113719
AMS 355*i* 300	300 m operating range, DeviceNet interface	50113720
AMS 355*i* 40 H	40 m operating range, DeviceNet interface, integrated heating	50113721
AMS 355*i* 120 H	120 m operating range, DeviceNet interface, integrated heating	50113722
AMS 355*i* 200 H	200 m operating range, DeviceNet interface, integrated heating	50113723
AMS 355*i* 300 H	300 m operating range, DeviceNet interface, integrated heating	50113724

Table 4.1: Type overview AMS 355*i*

5 Installation and mounting

5.1 Storage, transportation

Attention!

When transporting or storing, package the device so that it is protected against collision and humidity. Optimum protection is achieved when using the original packaging. Heed the required environmental conditions specified in the technical data.

Unpacking

- *Check the packaging for any damage. If damage is found, notify the post office or shipping agent as well as the supplier.*
- *Check the delivery contents using your order and the delivery papers:*
  - Delivered quantity
  - Device type and model as indicated on the nameplate
  - Brief manual

The name plate provides information as to what AMS 355*i* type your device is. For specific information, please refer to chapter 11.2.

Name plates

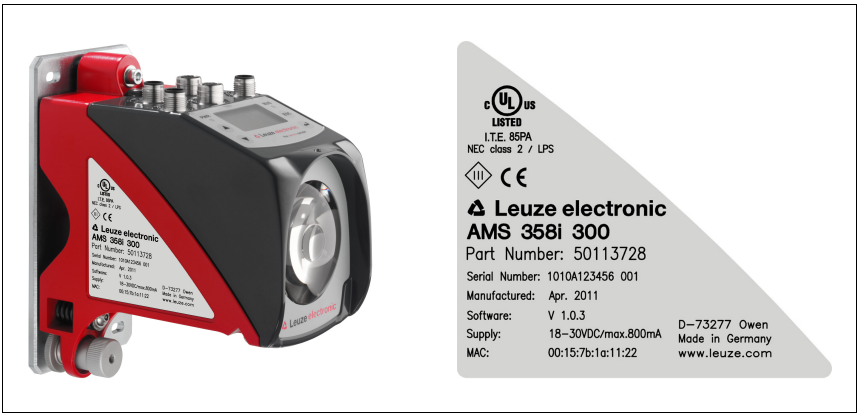

Figure 5.1: Device name plate using the AMS 300*i* as an example

Notice!

Please note that the shown name plate is for illustration purposes only; the contents do not correspond to the original.

- *Save the original packaging for later storage or shipping.*

If you have any questions concerning your shipment, please contact your supplier or your local Leuze electronic sales office.

Observe the applicable local regulations when disposing of the packaging materials.

5.2 Mounting the AMS 355*i*

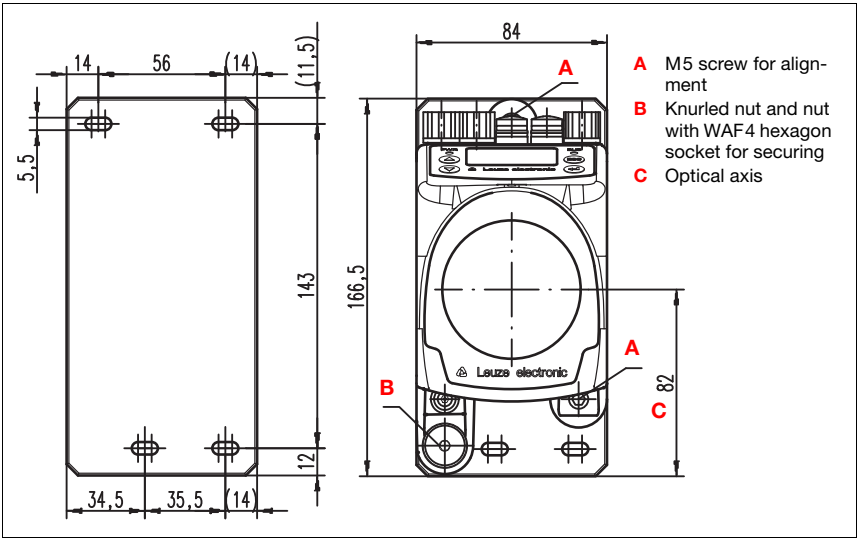

Figure 5.2: Mounting the device

The AMS 355*i* and the corresponding reflector are mounted on two mutually opposing, plane-parallel, flat walls or system parts. For error-free position measurement, there must be an unobstructed line-of-sight connection between the AMS 355*i* and the reflector.

Use M5 screws to fasten the laser measurement system. Secure the screws with a toothed lock washer to protect against loosening caused by vibrations.

Aligning the laser light spot in the center of the reflector

The laser light spot has to be aligned so that it always hits the center of the opposing reflector, both at close range as well as at the maximum measurement distance. **To align, use the two M5 Allen screws** ("**A**" in figure 5.2). When aligning please ensure that the knurled nut and the lock nut ("**B**" in figure 5.2) are opened wide.

Attention!

To prevent the laser measurement system from moving out of alignment during continuous operation, subsequently hand-tighten the knurled nut and counterlock with the nut with WAF4 hexagon socket ("B" in figure 5.2). Knurled nut and nut must not be tightened until alignment has been completed.

Attention!

The device must not be opened. Failure to comply will render the guarantee void. Warranted features cannot be guaranteed after the device has been opened.

5.2.1 Optional mounting bracket

A mounting bracket for mounting the AMS 355*i* on a flat, horizontal surface is available as an optional accessory.

Type designation: MW OMS/AMS 01

Part no.: 50107255

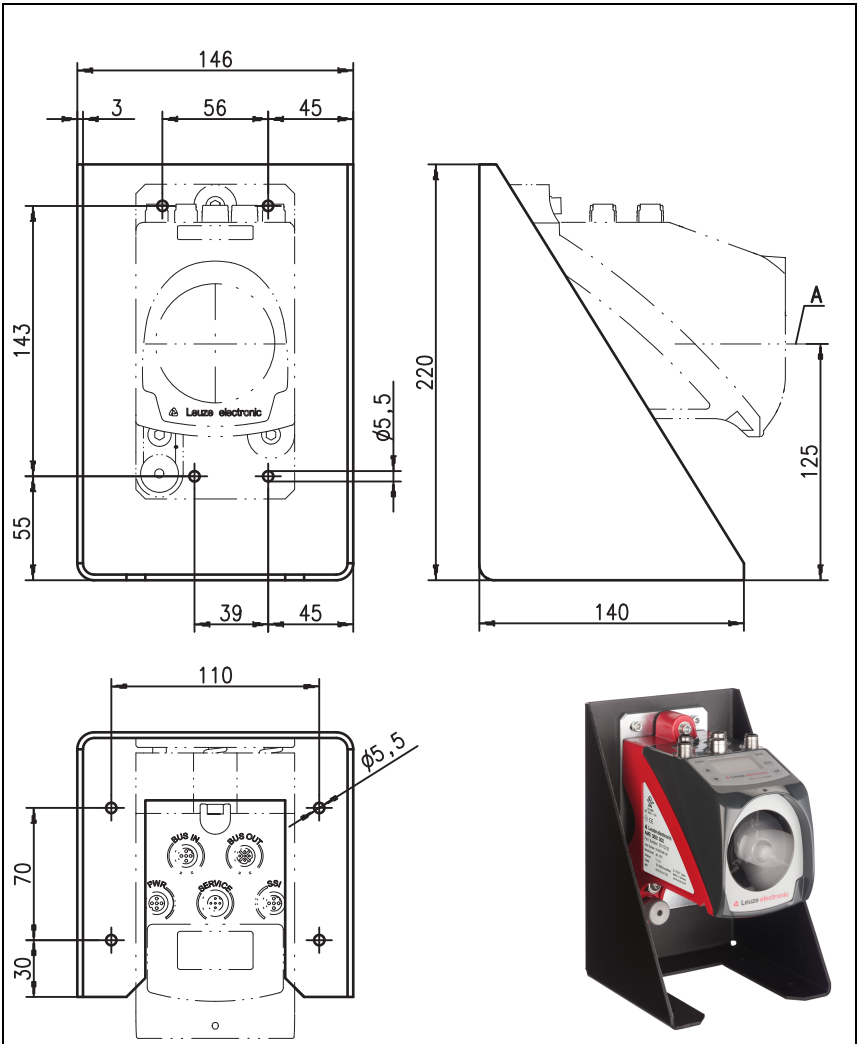

Figure 5.3: Optional mounting bracket

5.2.2 Parallel mounting of the AMS 355*i*

Definition of the term "parallel spacing"

As shown in figure 5.4, dimension X describes the "parallel spacing" of the inner edges of the two laser light spots on the reflector.

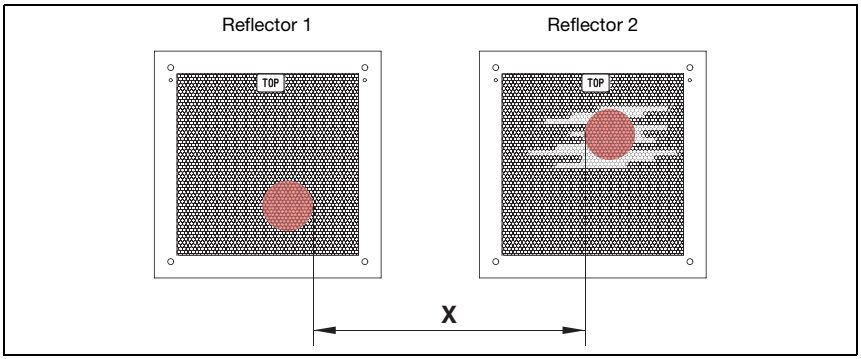

Figure 5.4: Minimum parallel spacing X between adjacent AMS 355*i*

The diameter of the light spot increases with distance.

	AMS 355*i* 40 (H)	AMS 355*i* 120 (H)	AMS 355*i* 200 (H)	AMS 355*i* 300 (H)
Max. measurement distance	40 m	120 m	200 m	300 m
Light spot diameter	≤ 40 mm	≤ 100 mm	≤ 150 mm	≤ 225 mm

Thus, the center-to-center spacing of the two AMS 355*i* devices with respect to one another can be calculated as a function of the maximum measurement distance.

To define the minimum parallel spacing between two AMS 355*i*, it is necessary to distinguish between three different arrangements of AMS 355*i* and reflectors.

The AMS 355*i* are mounted stationary and in parallel on one plane.
Both reflectors move independently of one another at different distances to the AMS 355*i*.

Minimum parallel spacing X of the two laser light spots:

X = 100 mm + (max. measurement distance in mm x 0.01)

The AMS 355*i* are mounted stationary and in parallel on one plane.
Both reflectors move in parallel at the same distance to the AMS 355*i*.

Measurement distance **up to 120 m**: minimum parallel spacing **X ≥ 600 mm**

Measurement distance **up to 200 m**: minimum parallel spacing **X ≥ 750 mm**

Measurement distance **up to 300 m**: minimum parallel spacing **X ≥ 750 mm**

The reflectors are mounted stationary and in parallel on one plane.
Both AMS 355*i* move independently of one another at different or the same distances to the reflectors.

Measurement distance **up to 120 m**: minimum parallel spacing **X ≥ 600 mm**

Measurement distance **up to 200 m**: minimum parallel spacing **X ≥ 750 mm**

Measurement distance **up to 300 m**: minimum parallel spacing **X ≥ 750 mm**

Notice!

*Please note that when the AMS 355*i* are mounted in a mobile manner, travel tolerances could cause the two laser light spots to move towards each other.*
*Take the travel tolerances of the vehicle into account when defining the parallel spacing of adjacent AMS 355*i*.*

5.2.3 Parallel mounting of AMS 355*i* and DDLS optical data transmission

The optical data transceivers of the DDLS series and the AMS 355*i* do not interfere with one another. Depending on the size of the used reflector, the DDLS can be mounted with a minimum parallel spacing of 100 mm to the AMS 355*i*. The parallel spacing is independent of the distance.

5.3 Mounting the AMS 355*i* with laser beam deflector unit

General information

The two available deflector units are used for the 90° deflection of the laser beam, see "Accessory deflector unit" on page 88.

Attention!

The deflector units are designed for a maximum range of 40m.
Longer distances on request.

5.3.1 Mounting the laser beam deflector unit With integrated mounting bracket

The AMS 355*i* is screwed onto the mechanism of the US AMS 01 deflector unit. The mirror can be mounted for three deflection directions:

1. Upward beam deflection
2. Beam deflection to the left
3. Beam deflection to the right

The deflector unit is mounted on plane-parallel, flat walls or plant components. For error-free position measurement, there must be an interruption-free line-of-sight between the AMS 355*i*… and the deflection mirror as well as between the mirror and the reflector.

Use the M5 screws to mount the deflector unit. Secure the screws with a toothed lock washer to protect against loosening caused by vibrations.

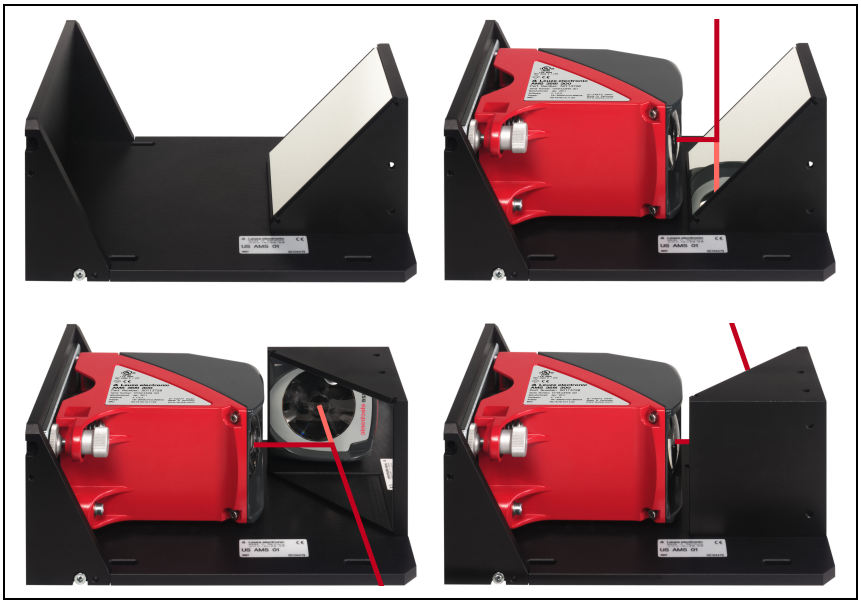

Figure 5.5: Mounting variants of the US AMS 01 laser beam deflector unit

5.3.2 Dimensioned drawing of US AMS 01 deflector unit

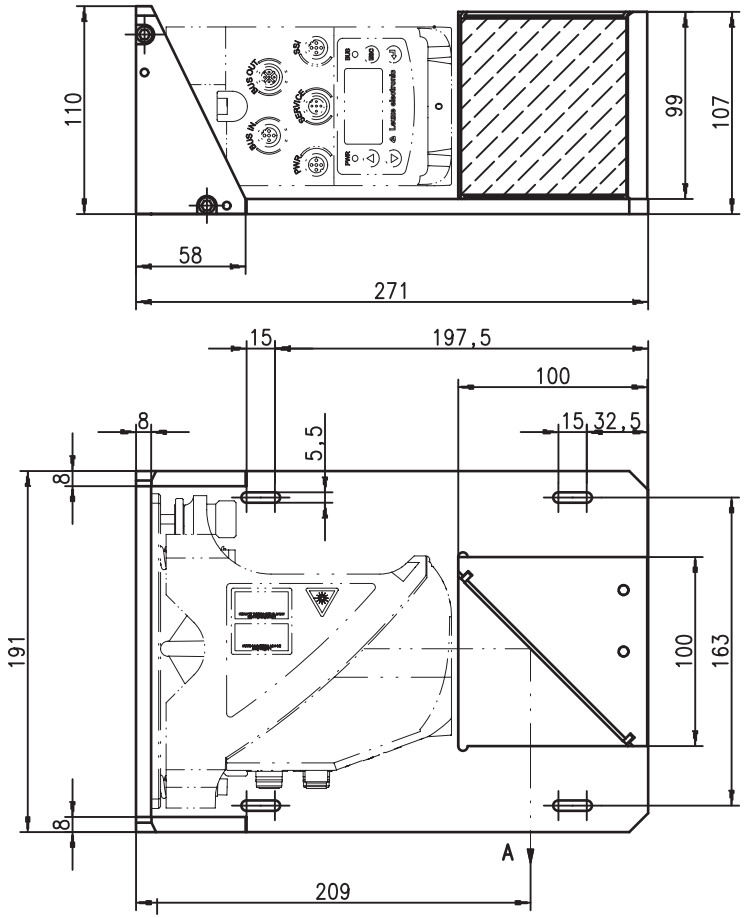

A Laser beam

Figure 5.6: Dimensioned drawing of US AMS 01 deflector unit

5.3.3 Mounting the US 1 OMS deflector unit without mounting bracket

The US 1 OMS deflector unit and the AMS 355*i* are mounted separately.

Notice!

When mounting, make certain that the laser light spot of the AMS 355i is aligned in the center of the deflection mirror.

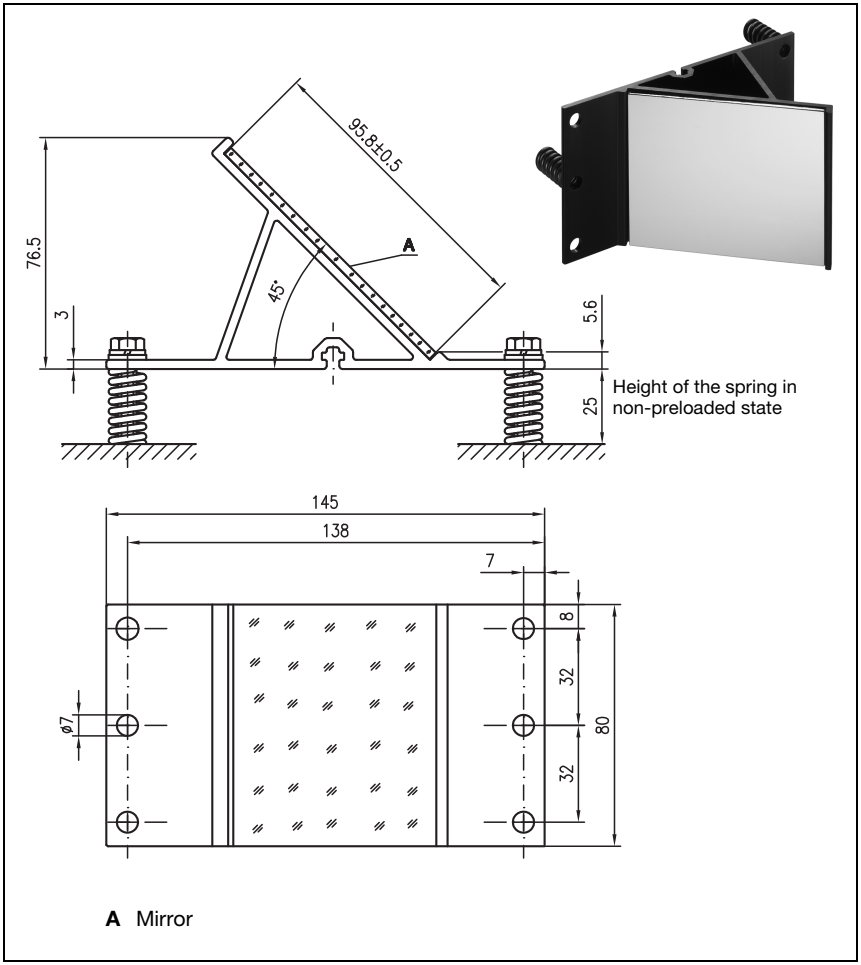

Figure 5.7: Photo and dimensioned drawing of the US 1 OMS deflector unit

Alignment of the laser light spot on the reflector is performed as described in chapter 5.2.

6 Reflectors

6.1 General information

The AMS 355*i* measures distances against a reflective tape specified by Leuze electronic. All provided specifications for the AMS 355*i*, such as the operating range or accuracy, can only be achieved with the reflective tape specified by Leuze electronic.

The reflective tapes are available as adhesive tapes, affixed to a metal plate and with an integrated heater especially for use at low temperatures. Reflective tapes with heating have the designation "**Reflective tape ...x...-H**", where "**H**" is an abbreviation for the heating variant.

The reflective tapes/reflectors must be ordered separately. The choice of size is left to the user. In chapter 6.3, recommendations on reflector size are provided as a function of the distance that is to be measured. In any case, the user must check to determine whether the recommendation is suitable for the respective application.

6.2 Description of the reflective tape

The reflective tape consists of a white, microprism-based reflective material. The microprisms are protected with a highly transparent, hard protective layer.

Under certain circumstances, the protective layer may lead to surface reflections. The surface reflections can be directed past the AMS 355*i* by positioning the reflective tape at a slight incline. The inclination of the reflective tape/reflectors is described in chapter 6.4.2. The required pitch can be found in table 6.1 "Reflector pitch resulting from spacer sleeves" on page 36.

The reflective tapes are provided with a protective foil that can easily be pulled off. This must be removed from the reflector before the complete system is put into operation.

6.2.1 Specifications of the self-adhesive foil

	Part		
Type designation	**Reflective tape 200x200-S**	**Reflective tape 500x500-S**	**Reflective tape 914x914-S**
Part no.	50104361	50104362	50108988
Foil size	200x200mm	500x500mm	914x914mm
Recommended application temperature for adhesive tape	+5°C … +25°C		
Temperature resistance, affixed	-40°C … +80°C		
Mounting surface	The mounting surface must be clean, dry and free of grease.		
Cutting the tape	Cut with a sharp tool, always on the side of the prism structure.		
Cleaning	Do not use any agents that act with a grinding effect. A conventional household detergent can be used as a cleaning agent. Rinse with clear water and dry the surface.		
Storing the foil	Store in a cool and dry place.		

6.2.2 Specifications of the reflective tape on a metal plate

The reflective tape is affixed to a metal plate. Included with the metal plate are spacers for positioning at an incline - for avoiding surface reflections - (see chapter 6.4.2 "Mounting the reflector").

	Part		
Type designation	**Reflective tape 200x200-M**	**Reflective tape 500x500-M**	**Reflective tape 914x914-M**
Part no.	50104364	50104365	50104366
Foil size	200x200mm	500x500mm	914x914mm
Outer dimensions of the metal plate	250x250mm	550x550mm	964x964mm
Weight	0.8kg	4kg	25kg
Cleaning	Do not use any agents that act with a grinding effect. A conventional household detergent can be used as a cleaning agent. Rinse with clear water and dry the surface.		
Storing the reflector	Store in a cool and dry place.		

6.2.3 Dimensioned drawing of reflective tape on a metal plate

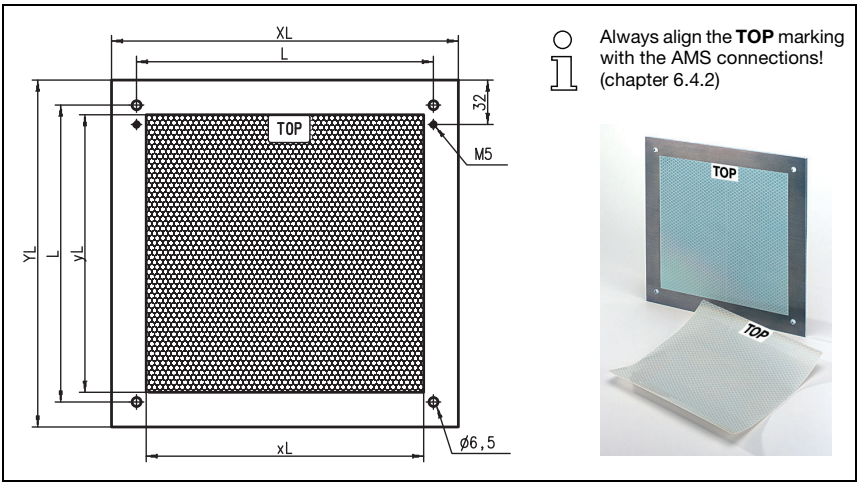

Figure 6.1: Dimensioned drawing of reflectors

Part	Reflective tape (mm)		Reflector plate (mm)		
	xL	yL	XL	YL	L
Reflective tape 200x200-M	200	200	250	250	214
Reflective tape 500x500-M	500	500	550	550	514
Reflective tape 914x914-M	914	914	964	964	928

6.2.4 Specifications of heated reflectors

The reflective tape is affixed to a heated, thermally insulated base. The insulation results in a very high energetic efficiency.

Only the reflective tape is kept at the specified temperature by the integrated heater. Through the insulation on the back, the generated heat cannot be transferred via the steel construction. Energy costs are greatly reduced in the case of continuous heating.

	Part		
Type designation	**Reflective tape 200x200-H**	**Reflective tape 500x500-H**	**Reflective tape 914x914-H**
Part no.	50115020	50115021	50115022
Voltage supply	230VAC		
Power	100W	600W	1800W
Current consumption	~ 0.5A	~ 3A	~ 8A
Length of the supply line	2 m		
Size of the reflective tape	200x200mm	500x500mm	914x914mm
Outer dimensions of the base material	250x250mm	550x550mm	964x964mm
Weight	0.5kg	2.5kg	12kg
Temperature control	Controlled heating with the following switch-on and switch-off temperatures, measured at the reflector surface.		
Switch-on temperature	~ 5°C		
Switch-off temperature	~ 20°C		
Operating temperature	-30°C … +70°C		
Storage temperature	-40°C … +80°C		
Air humidity	Max. 90%, non-condensing.		
Cleaning	Do not use any agents that act with a grinding effect. A conventional household detergent can be used as a cleaning agent. Rinse with clear water and dry the surface.		
Storing the reflector	Store in a cool and dry place.		

6.2.5 Dimensioned drawing of heated reflectors

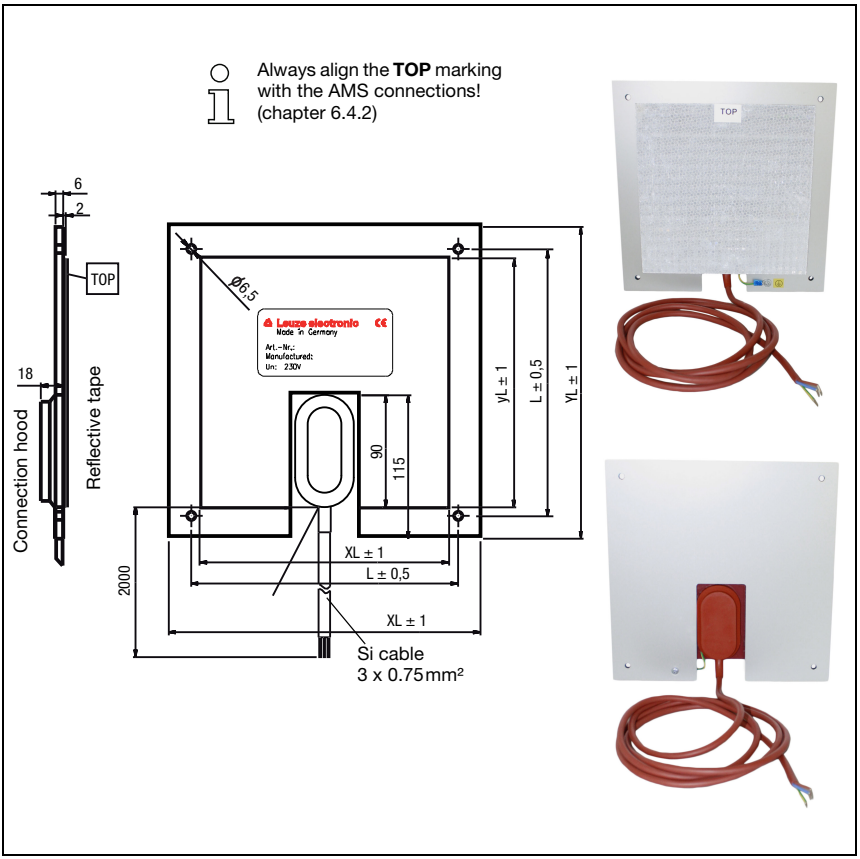

Figure 6.2: Dimensioned drawing of heated reflectors

Part	Reflective tape (mm)		Insulated base plate (mm)		
	xL	yL	XL	YL	L
Reflective tape 200x200-H	200	200	250	250	214
Reflective tape 500x500-H	500	500	550	550	514
Reflective tape 914x914-H	914	914	964	964	928

6.3 Selecting reflector sizes

Depending on system design, the reflector can be mounted so that it travels on the vehicle or it can be mounted at a fixed location.

Attention!

The reflector sizes shown below are a recommendation from Leuze electronic for on-vehicle mounting of the AMS 355i. For stationary mounting of the AMS 355i, a smaller reflector is generally sufficient for all measurement distances.
On the basis of the system planning and design, always check whether mechanical travel tolerances may require the use of a reflector larger than that which is recommended. This applies, in particular, when the laser measurement system is mounted on a vehicle. During travel, the laser beam must reach the reflector without interruption. For on-vehicle mounting of the AMS 355i, the reflector size must accommodate any travel tolerances that may arise and the associated "wandering" of the light spot on the reflector.

Overview of reflector types

Recommended reflector sizes			
AMS 355*i* selection (Operating range in m)	**Recommended reflector size (H x W)**	**Type designation …-S = Self-adhesive …-M = metal plate …-H = heating**	**Part no.**
AMS 355*i* 40 (**max. 40m**)	200x200mm	Reflective tape 200x200-S Reflective tape 200x200-M Reflective tape 200x200-H	50104361 50104364 50115020
AMS 355*i* 120 (**max. 120m**)	500x500mm	Reflective tape 500x500-S Reflective tape 500x500-M Reflective tape 500x500-H	50104362 50104365 50115021
AMS 355*i* 200 (**max. 200m**)	749x914mm 914x914mm	Reflective tape 749x914-S Reflective tape 914x914-M Reflective tape 914x914-S Reflective tape 914x914-H	50104363 50104366 50108988 50115022
AMS 355*i* 300 (**max. 300m**)	749x914mm 914x914mm	Reflective tape 749x914-S Reflective tape 914x914-M Reflective tape 914x914-S Reflective tape 914x914-H	50104363 50104366 50108988 50115022

6.4 Mounting the reflector

6.4.1 General information

Self-adhesive reflective tapes

The reflective tapes of the "Reflective tape …x…**-S**" self-adhesive series must be affixed to a flat, clean and grease-free surface. We recommend using a separate metal plate, which is to be provided on-site.

As described in table 6.1, the reflective tape must be angled.

Reflective tapes on metal

The reflective tapes of the "Reflective tape …x…**-M**" series are provided with corresponding mounting holes. Spacer sleeves are provided in the packet for achieving the necessary pitch angle. For further information see table 6.1.

Heated reflectors

The reflective tapes of the "Reflective tape ...x...**-H**" series are provided with corresponding mounting holes. Due to the voltage supply affixed on the rear, the reflector cannot be mounted flat. Included in the package are four distance sleeves in two different lengths. Use the distance sleeves to achieve a base separation to the wall as well as the necessary pitch for avoiding surface reflection. For further information see table 6.1.

The reflector is provided with a 2m-long connection cable for supplying with 230VAC. Connect the cable to the closest power outlet. Observe the current consumptions listed in the specifications.

Attention!

Connection work must be carried out by a certified electrician.

6.4.2 Mounting the reflector

The combination of laser measurement system and reflective tape/reflector is mounted so that the laser light spot hits the tape as centered as possible and without interruption.

For this purpose, use the alignment elements provided on the AMS 355*i*… (see chapter 5.2 "Mounting the AMS 355i"). If necessary, remove the protective foil from the reflector.

Attention!

The "TOP" label mounted on the reflectors should be aligned the same as the connections of the AMS 355*i*.

Example:

If the AMS 355i is mounted so that the M12 connections are on the top, the "TOP" label of the reflector is also on the top. If the AMS 355i is mounted so that the M12 connections are on the side, the "TOP" label of the reflector is also on the side.

Notice!

The reflector must be angled. To do this, use the spacer sleeves. Angle the reflectors so that the ***surface reflections of the foil seal are deflected to the left, right or upwards****, chapter 6.4.3 gives the correct pitch with respect to the reflector size and, thus, the length of the spacers.*

Reflective tapes …-S and …-M

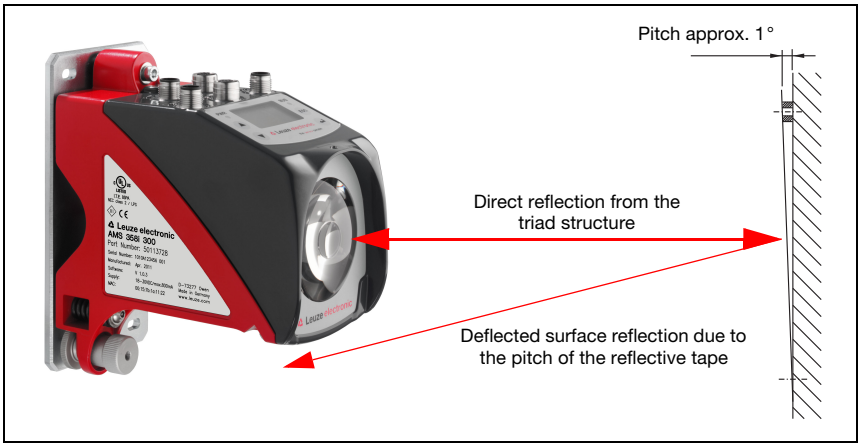

Figure 6.3: Reflector mounting

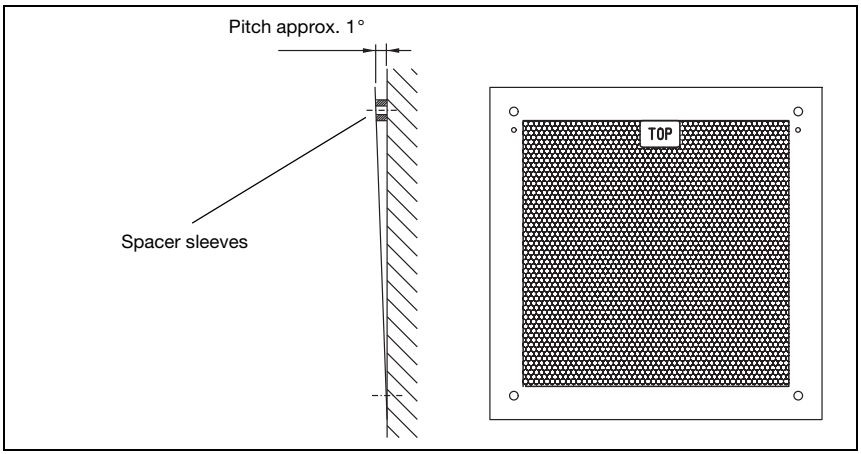

Figure 6.4: Pitch of the reflector

Reflective tapes ...-H

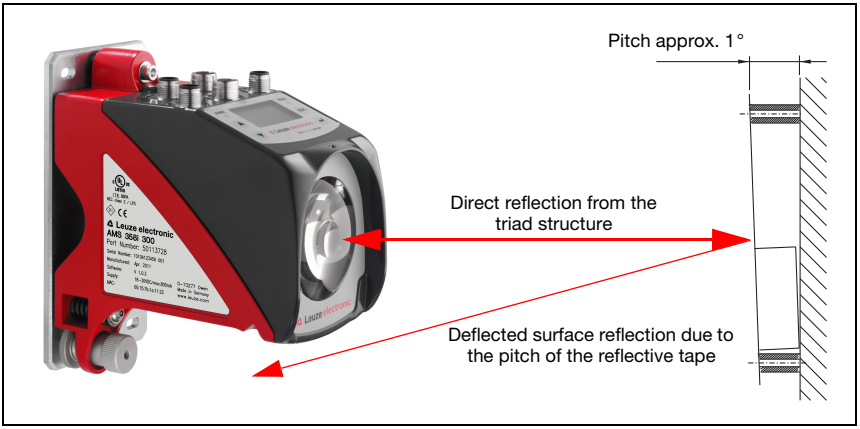

Figure 6.5: Mounting of heated reflectors

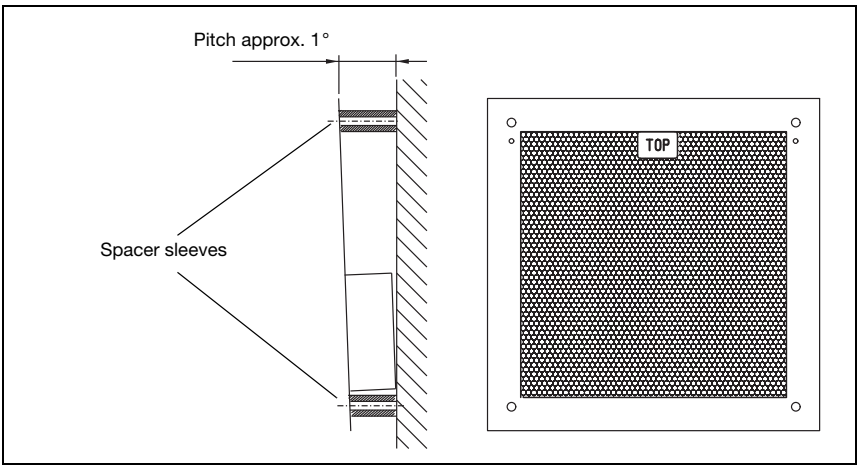

Figure 6.6: Pitch of the heated reflector

6.4.3 Table of reflector pitches

Reflector type	Pitch resulting from spacer sleeves [1]	
Reflective tape 200x200-S Reflective tape 200x200-M	**2 x 5mm**	
Reflective tape 200x200-H	**2 x 15mm**	**2 x 20mm**
Reflective tape 500x500-S Reflective tape 500x500-M	**2 x 10mm**	
Reflective tape 500x500-H	**2 x 15mm**	**2 x 25mm**
Reflective tape 749x914-S	**2 x 20mm**	
Reflective tape 914x914-S Reflective tape 914x914-M	**2 x 20mm**	
Reflective tape 914x914-H	**2 x 15mm**	**2 x 35mm**

1) Spacer sleeves are included in the delivery contents of reflective tape …-**M** and …-**H**

Table 6.1: Reflector pitch resulting from spacer sleeves

Notice!

Reliable function of the AMS 355i and, thus, max. operating range and accuracy can only be achieved with the reflective tape specified by Leuze electronic. No function can be guaranteed if other reflectors are used!

7 Electrical connection

The AMS 355*i* laser measurement systems are connected using variously coded M12 connectors. This ensures unique connection assignments.

Notice!

The corresponding mating connectors and ready-made cables are available as accessories for all cables. For further information, see chapter 11 "Type overview and accessories".

Figure 7.1: Connections of the AMS 355*i*

1) After DeviceNet specification (Volume 3: DeviceNet Adaptation of CIP Chapter 8, Physical Layer 8-3.3 Connectors), use of the BUS OUT connection is not allowed.

7.1 Safety notices for the electrical connection

Attention!

Before connecting the device, be sure that the supply voltage agrees with the value printed on the name plate.
The device may only be connected by a qualified electrician.
Ensure that the functional earth (FE) is connected correctly. Unimpaired operation is only guaranteed when the functional earth is connected properly.
If faults cannot be corrected, the device should be removed from operation and protected against possible use.

Attention!

For UL applications, use is permitted exclusively in Class 2 circuits according to NEC (National Electric Code).

The laser measurement systems are designed in accordance with safety class III for supply by PELV (protective extra-low voltage with reliable disconnection).

Notice!

Protection class IP65 is achieved only if the connectors and caps are screwed into place!

Described in detail in the following are the individual connections and pin assignments.

7.2 PWR – voltage supply / switching input/output

PWR (5-pin plug, A-coded)			
PWR 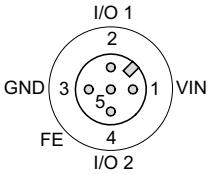 **M12 plug (A-coded)**	**Pin**	**Name**	**Remark**
	1	VIN	Positive supply voltage +18 … +30VDC
	2	I/O 1	Switching input/output 1
	3	GND	Negative supply voltage 0VDC
	4	I/O 2	Switching input/output 2
	5	FE	Functional earth
	Thread	FE	Functional earth (housing)

Table 7.1: Pin assignment PWR

Further information on configuring the input/output can be found in chapter 8 and chapter 9.

7.3 DeviceNet BUS IN

BUS IN (5-pin plug, A-coded)			
BUS IN 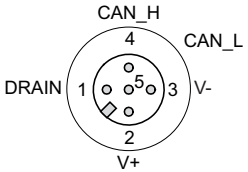 **M12 plug (A-coded)**	**Pin**	**Name**	**Remark**
	1	Drain	Shield
	2	V+	Supply voltage data V+
	3	V-	Supply voltage data V-
	4	CAN_H	Data signal CAN_H
	5	CAN_L	Data signal CAN_L
	Thread	FE	Functional earth (housing)

Table 7.2: Pin assignments for DeviceNet BUS IN

7.4 DeviceNet BUS OUT

BUS OUT (5-pin socket, A-coded)			
BUS OUT 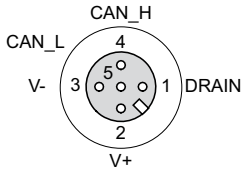 **M12 socket (A-coded)**	**Pin**	**Name**	**Remark**
	1	Drain	Shield
	2	V+	Supply voltage data V+
	3	V-	Supply voltage data V-
	4	CAN_H	Data signal CAN_H
	5	CAN_L	Data signal CAN_L
	Thread	FE	Functional earth (housing)

Table 7.3: Pin assignments for DeviceNet BUS OUT

Attention!

After DeviceNet specification (Volume 3: DeviceNet Adaptation of CIP Chapter 8, Physical Layer 8-3.3 Connectors), use of the BUS OUT connection is not allowed.

7.5 Service

Service (5-pin socket, A-coded)			
SERVICE 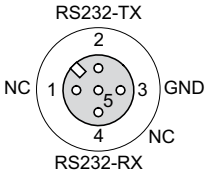 **M12 socket (A-coded)**	**Pin**	**Name**	**Remark**
	1	NC	Not used
	2	RS232-TX	Transmission line RS 232/service data
	3	GND	Voltage supply 0VDC
	4	RS232-RX	Receiving line RS 232/service data
	5	NC	Not used
	Thread	FE	Functional earth (housing)

Table 7.4: Service pin assignments

Notice!

The service interface is designed only for use by Leuze electronic!

8 Display and control panel AMS 355*i*

8.1 Structure of the control panel

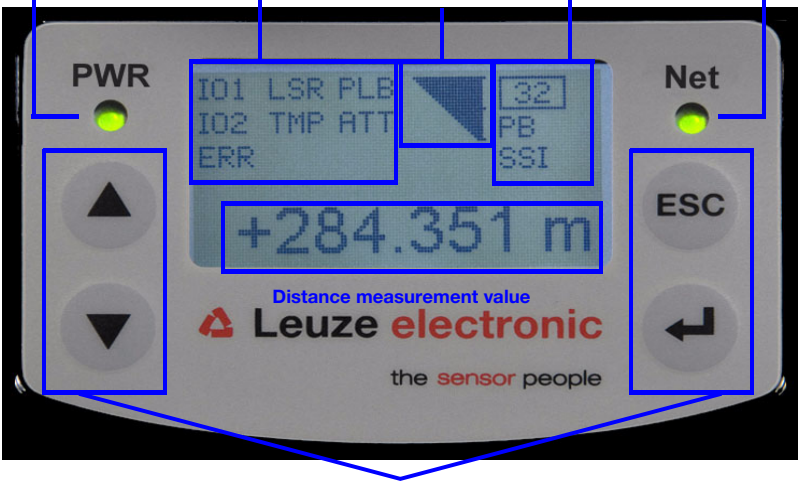

Figure 8.1: Structure of the control panel using the AMS 304*i* PROFIBUS device variant as an example

8.2 Status display and operation

8.2.1 Indicators in the display

Status and warning messages in the display

IO1 **Input 1 or output 1 active:**
Function depending on configuration.

IO2 **Input 2 or output 2 active:**
Function depending on configuration.

LSR **Warning - laser prefailure message:**
Laser diode old, device still functional, exchange or have repaired.

TMP **Warning - temperature monitoring:**
Permissible internal device temperature exceeded / not met.

PLB **Plausibility error:**
Implausible measurement value. Possible causes: light beam interruption, outside of measurement range, permissible internal device temperature considerably exceeded or traverse rate >10m/s.

Depending on the configuration, either zero or the last valid measurement value is output at the interfaces.

ATT **Warning received signal:**
Laser outlet window or reflector soiled or fogged by rain, water vapor or fog. Clean or dry surfaces.

ERR **Internal hardware error:**
The device must be sent in for inspection.

Bar graph

Indicates the **strength of the received laser light**.

The center bar represents the **ATT** warning threshold. The distance value remains valid and is output at the interfaces.

If no bar graph is available, the **PLB** status information appears at the same time.

The measurement value has thus been assessed as being implausible. Depending on the configuration, either zero or the last valid measurement value is output at the interfaces.

Interface info

An activated DeviceNet interface is indicated by the presence of MAC ID (bus address) and the "DNET" ID in the display. If the DeviceNet interface is deactivated, the MAC ID and DNET ID are hidden from view.

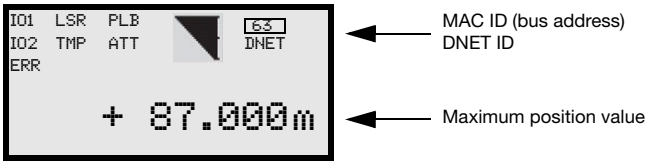

Maximum position value

The measured position value is displayed in the configured unit of measurement.

+87.000m With the **metric** setting, the measurement value is always displayed in meters with **three decimal places**.

+87.0in With the **inch** setting, the measurement value is always displayed in inches with **one decimal place**.

8.2.2 LED status displays

After power ON, a test of the Power LED and Net LED is performed in the following sequence:

1. LEDs off.
2. LEDs are switched to green for approx. 0.25 s.
3. LEDs are switched to red for approx. 0.25 s.
4. LEDs off.

This is followed by the status display for the power LED (see chapter 9.3) and the Net LED.

PWR LED

PWR	**Off**	**Device OFF** - No supply voltage
PWR	**Flashing green**	**Power LED flashes green** - LED function test for 0.25 s after power up - No measurement value output - Voltage connected - Self test running - Initialization running - Parameter download running - Boot process running
PWR	**Green continuous light**	**Power LED green** - AMS 355*i* ok - Measurement value output - Self test successfully finished - Device monitoring active
PWR	**Red flashing**	**Power LED flashes red** - LED function test for 0.25 s after power up - Device ok but warning message (ATT, TMP, LSR) set in display - Light beam interruption - Plausibility error (PLB)
PWR	**Red continuous light**	**Power LED red** - No measurement value output; for details, see Display
PWR	**Orange continuous light**	**Power LED orange** - Parameter enable active

- No data on the host interface

Net LED

Net	**Off**	**Net LED off** - The DUP MAC ID test is active - No voltage supply - The V+/V- voltage supply for the DeviceNet data driver is missing
Net	**Flashing green**	**Net LED flashes green** - LED function test for 0.25s after power up - DUP MAC ID test ok but no connection to other addresses can be established - AMS 355*i* is not assigned to any master
Net	**Green continuous light**	**Net LED green** - AMS 355*i* bus communication ok
Net	**Red flashing**	**Net LED flashes red** - LED function test for 0.25s after power up - Time-out in bus communication
Net	**Red continuous light**	**Net LED red** - No communication can be established
Net	**Green/red flashing**	**Net LED flashes green/red** - The AMS 355*i* has detected an identity communication error on the network. Protocol message too long. -

8.2.3 Control buttons

▲	**Up**	Navigate upward/laterally.
▼	**Down**	Navigate downward/laterally.
ESC	**ESC**	Exit menu item.
↵	**ENTER**	Confirm/enter value, change menu levels.

Navigating within the menus

The menus within a level are selected with the up/down buttons ▲ ▼.

The selected menu item is activated with the enter button ↵.

Press the ESC button ESC to move up one menu level.

When one of the buttons is actuated, the display illumination is activated for 10 min.

Setting values

If input of a value is possible, the display looks like this:

```
100
        <-l0123456789  save
    Default ---------------- unit
126          |    |
```

← + ↵	Delete character
0...9 + ↵	Enter digit
save + ↵	Save

Use the ▲ ▼ and ↵ buttons to set the desired value. An accidental, incorrect entry can be corrected by selecting <-l and then pressing ↵.

Then use the ▲ ▼ buttons to select Save and save the set value by pressing ↵.

Selecting options

If options can be selected, the display looks like this:

```
o OFF
  ON
   Default ---------------- unit
  OFF        |    |
```

Select the desired option with the ▲ ▼ buttons. Activate the option by pressing ↵.

8.3 Menu description

8.3.1 The main menus

After voltage has been applied to the laser, device information is displayed for several seconds. The display then shows the measurement window with all status information.

```
AMS 355i 120
Leuze electronic
          GmbH & Co. KG
SW: V 1.3.0   HW:1
SN: --------------
```

Device information - main menu

This menu item contains detailed information on
- Device model,
- Manufacturer,
- Software and hardware version,
- Serial number.

No entries can be made via the display.

```
Network information
Address:      --
Baud rate:    --- kbit/s
Status:       Not powered, ...
```

Network information - main menu

- Explanations of address, baud rate, status.

No entries can be made via the display.

```
IO1  LSR  PLB        63
IO2  TMP  ATT        DNET
ERR

        + 87.000m
```

Status and measurement data - main menu

- Display of status-, warning-, and error messages
- Status overview of the switching inputs/outputs.
- Bar graph for the reception level.
- Link.
- Measurement value.

No entries can be made via the display.
See "Indicators in the display" on page 40.

```
Parameter
  Parameter handling
  DeviceNet
  Maximum position value
  I/O
  Other
```

Parameter - main menu

- Configuration of the AMS.

See "Parameter menu" on page 46.

```
Language
selection
o Deutsch
o English
o Español
o Français
```

Language selection - main menu

- Selection of the display language.

See "Language selection menu" on page 49.

```
Service
  Status messages
  Diagnostics
  Expanded diagnostics
```

Service - main menu

- Display of status messages.
- Display of diagnostic data.

No entries can be made via the display.
See "Service menu" on page 49.

Notice!

The rear cover *of this manual includes a* ***fold-out page*** *with the complete* ***menu structure****.*
It describes the menu items in brief.

8.3.2 Parameter menu

Parameter handling submenu

The following functions can be called up in the Parameter handling submenu:

- Lock and enable parameter entry
- Set up a password
- Reset the AMS 355*i* to default settings.

Table 8.1: Parameter handling submenu

Level 3	Level 4	Level 5	Selection/configuration option Description	Standard
Parameter enabling			ON / OFF The standard setting (OFF) prevents unintended parameter changes. With parameter enabling activated (ON), the display is inverted. In this state, it is possible to change parameters manually.	OFF
Password	Activate password		ON / OFF To enter a password, parameter enabling must be activated. If a password is assigned, changes to the AMS 355*i* can only be made after the password is entered. The master password 2301 bridges the individually set password.	OFF
	Password entry		Configuration option of a four-digit numerical password	
Parameters to default			By pressing the enter button ↵ after selecting Parameters to default, all parameters are reset to their standard settings without any further security prompts. In this case, English is selected as the display language.	

Additional important information on parameter handling can be found at the end of the chapter.

DeviceNet submenu

Table 8.2: DeviceNet submenu

Level 3	Level 4	Level 5	Selection/configuration option Description	Standard
Activation			ON / OFF	ON
Node ID			Entry of the device address.	63
Baud rate			125 kbit/s / 250 kbit/s / 500 kbit/s Selection of the baud rate for serial communication. The baud rate specifies the speed of data transmission. It must be the same at the transmission and reception sides to enable communication.	125 kbit/s

Position value submenu

Notice!

The parameters named under position value are to be set via the EDS file of the AMS 355i. If parameters from the position value submenu are changed via the display, these are overwritten via the EDS file stored in the control with the values stored there.

Table 8.3: Position value submenu

Level 3	Level 4	Level 5	Selection/configuration option Description	Standard
Measurement unit			Metric/Inch Specifies the units of the measured distances	Metric
Count direction			Positive/Negative Positive: The measurement value begins at 0 and increases with increasing distance. Negative: The measurement value begins at 0 and decreases with increasing distance. Negative distance values may need to be compensated with an offset or preset.	Positive
Offset			Output value=measurement value+offset. The resolution of the offset value is independent of the selected "Resolution position" and is entered in mm or inch/100. The offset value is effective immediately following entry. If the preset value is activated, this has priority over the offset. Preset and offset are not offset against each other.	0 mm
Preset			The preset value is accepted by means of teach pulse. The teach pulse can be applied to a hardware input of the M12 PWR connector. The hardware input must be appropriately configured. See also configuration of the I/Os.	0 mm
Free resolution value			The measurement value can be resolved in increments of 1/1000 within the 5 … 50000 value range. If, e.g., a resolution of 0.875 mm per digit is required, the parameter is set to 875. Although the parameter can be set via the display, it is overwritten in any case by the values stored in the EDS file. I.e. it must be changed via the EDS file.	1000
Error delay			ON / OFF Specifies whether, in the event of an error, the position value immediately outputs the value of the "Position value in the case of error" parameter or the last valid position value for the configured error delay time.	ON/100 ms
Position value in the case of error			Last valid value / zero Specifies which position value is output after the error delay time elapses.	Zero

I/O submenu

Table 8.4: I/O submenu

Level 3	Level 4	Level 5	Selection/configuration option Description	Standard
I/O 1	Port configuration		Input/Output Defines whether I/O 1 functions as an output or input.	Output
	Switching input	Function	No function/preset teach/laser ON/OFF	No function
		Activation	Low active/High active	Low active
	Switching output	Function	Pos. limit value 1 / Pos. limit value 2 / Velocity / Intensity (ATT) / Temp. (TMP) / Laser (LSR) / Plausibility (PLB) / Hardware (ERR) The individual functions are "ORed" on the selected switching output.	Plausibility (PLB), hardware (ERR)
		Activation	Low active/High active	Low active
I/O 2	Port configuration		Input/Output Defines whether I/O 2 functions as an output or input.	Output

Table 8.4: I/O submenu

Level 3	Level 4	Level 5	Selection/configuration option Description	Standard
	Switching input	Function	No function/preset teach/laser ON/OFF	No function
		Activation	Low active/High active	Low active
	Switching output	Function	Pos. limit value 1 / Pos. limit value 2 / Velocity / Intensity (ATT) / Temp. (TMP) / Laser (LSR) / Plausibility (PLB) / Hardware (ERR) The individual functions are "ORed" on the selected switching output.	Intensity (ATT), Temp. (TMP), Laser (LSR)
		Activation	Low active/High active	Low active
Limit values	Upper pos. limit 1	Activation	ON / OFF	OFF
		Limit value input	Value input in mm or inch/100	0
	Lower pos. limit 1	Activation	ON / OFF	OFF
		Limit value input	Value input in mm or inch/100	0
	Upper pos. limit 2	Activation	ON / OFF	OFF
		Limit value input	Value input in mm or inch/100	0
	Lower pos. limit 2	Activation	ON / OFF	OFF
		Limit value input	Value input in mm or inch/100	0

Other submenu

Table 8.5: Other submenu

Level 3	Level 4	Level 5	Selection/configuration option Description	Standard
Heating control			Standard (10° C … 15° C)/Extended (30° C … 35°) Defines a switch-on/switch-off range for the heating control. The extended switch-on/switch-off range for heating may provide relief in the event of condensation problems. There is no guarantee that no condensation will occur on the optics in the extended switch-on/switch-off range due to the limited heating capacity. This parameter is available as standard, but functions only for devices with integrated heating (AMS 355*i*… **H**).	Standard
Display illumination			10 minutes/ON Display illumination is switched off after 10 minutes or, if the parameter is set to "ON", illumination is always on.	10 min.
Display contrast			Weak/Medium/Strong The display contrast may change at extreme temperature values. The contrast can subsequently be adapted using the three levels.	Medium
Service RS232	Baud rate		57.6 kbit/s / 115.2 kbit/s The service interface is only available to Leuze internally.	115.2 kbit/s
	Format		8,e,1 / 8,n,1 The service interface is only available to Leuze internally.	8,n,1

8.3.3 Language selection menu

```
Language
selection
o Deutsch
● English
o Español
o Français
```

There are 5 display languages available:

- German
- English
- Spanish
- French
- Italian

The AMS 355*i* is delivered from the factory with the display preset to English.

Notice!

When operating the AMS 355i on the DeviceNet, the language configured in the ESD file is used in the display.

To change the language, no password needs to be entered nor must password enabling be activated. The display language is a passive operational control and is, thus, not a function parameter, per se.

8.3.4 Service menu

```
Service
 Status messages
 Diagnostics
 Expanded diagnostics
```

A more detailed description of the individual functions can be found in chapter 10.

8.4 Operation

Described here is an operating process using parameter enabling as an example.

Parameter enabling

During normal operation parameters can only be viewed. If parameters are to be changed, the `ON` menu item in the `Parameter -> Parameter handling -> Parameter enable` menu must be activated. To do this, proceed as follows:

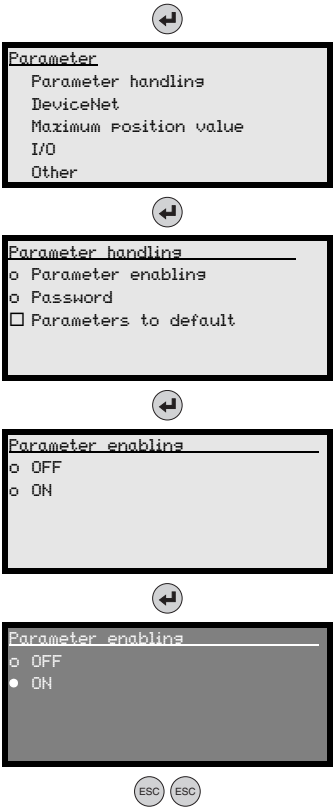

In the main menu, press the enter button to enter the Parameter menu.

Use the ▲ ▼ buttons to select the Parameter handling menu item.

Press the enter button to enter the Parameter handling menu.

In the Parameter handling menu, use the ▲ ▼ buttons to select the Parameter enabling menu item.

Press the enter button to enter the Parameter enabling menu.

In the Parameter enabling menu, use the ▲ ▼ buttons to select the ON menu item.

Press the enter button to switch on parameter enabling.

The PWR LED illuminates orange; the display is inverted. You can now set the individual parameters on the display.

Press the ESC button twice to return to the Parameter menu.

Viewing and editing parameters

As long as parameter enabling is activated, the entire AMS 355*i* display is inverted.

As long as parameter enabling is activated, communication between control and AMS 355*i* is interrupted. The continued networking via BUS OUT is retained.

Attention!

*The Rockwell control offers the possibility of activating the **Configuration Recovery** function.*

According to the criteria specified by Rockwell Automation, Configuration Recovery automatically downloads parameters to the AMS 355i. This results in parameters that were manually changed via the display being restored by the control to the configured AMS 355i data from the EDS file. The parameters that were manually changed via the display are, thus, no

longer valid.
The address setting made on the AMS 355i for DeviceNet (MAC ID) is not affected by automatic changes.

Attention!
*If the **Configuration Recovery** function is not activated, parameters set manually via the display are activated the moment parameter enabling is again deactivated on the AMS 355i.*

Notice!
If a password was stored, parameter enabling is not possible until this password is entered, see "Password for parameter enabling" below.

Password for parameter enabling

Parameter entry on the AMS 355*i* can be protected with a password. With the AMS 355*i*, the password is defined via the EDS file (class 100, instance 1). Thus, the password cannot be changed by means of display entry.

To activate parameter enabling via the display (e.g., for changing an address), the password defined in the EDS file must be entered. If parameter enabling has been activated after successfully entering the password, parameters can temporarily be changed via the display.

After parameter enabling is deactivated, all changes made on the display are overwritten by the EDS file (see above). If a new password has been assigned, this, too, is overwritten by the password defined in the EDS file.

Notice!
*The **master password 2301** can enable the AMS 355i at any time.*

9 DeviceNet interface

9.1 General information on DeviceNet

9.1.1 Topology

A bus address is assigned to each participant connected to DeviceNet; this address is represented by a DeviceNet **MAC ID** (**M**edia **a**ccess **Id**entifier).

Including the master, up to 64 participants can be connected to one network. The address range spans from 0 - 63.

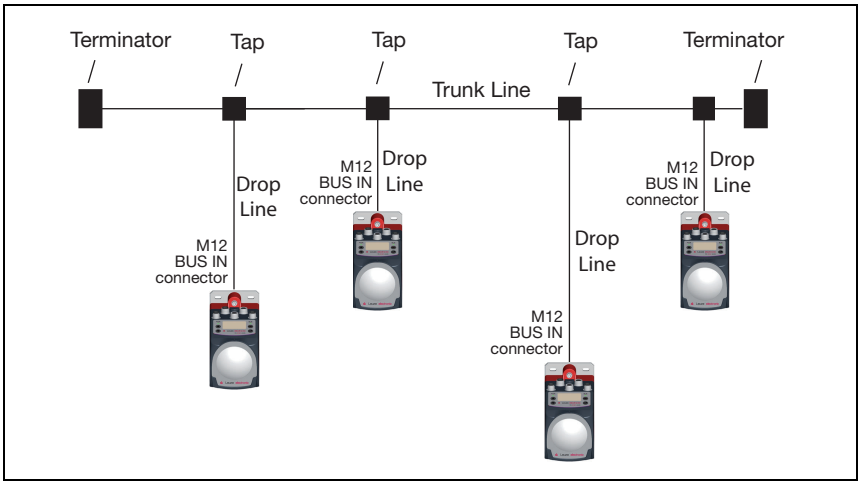

Figure 9.1: Bus topology

Attention!

After DeviceNet specification (Volume 3: DeviceNet Adaptation of CIP Chapter 8, Physical Layer 8-3.3 Connectors), use of the BUS OUT connection is not allowed.

The topologies presented here are enabled according to the directives of the ODVA.

On the respective ends of the trunk line (master line), the bus must be terminated with a 120 ohm terminating resistor. A cable specified by the ODVA is required for connecting the participants to DeviceNet.

In addition to supplying the two signals for data transmission—CAN_L and CAN_H—the DeviceNet cable also makes available two additional lines for supplying the network device or bus transceiver.

Notice!

After specification by the ODVA, with the AMS 355i the bus transceivers are supplied via the V+/V- cables present in the data line. Without this voltage supply, the participant cannot be operated.
Only cables that satisfy the ODVA specifications may be used.

The limits of network expansion without repeater are specified by the ODVA. The specified limit values are dependent on the design of the data line.

A distinction is made between "thick cable", "mid cable" and "thin cable".

DeviceNet installation

Up to 64 network devices can communicate with one another in a DeviceNet network with baud rates of 125, 250 or 500 kBaud. In addition to the two signals for data transmission—CAN-L and CAN-H—the DeviceNet cable also includes two cables for supplying the DeviceNet bus transceiver with 11 … 25VDC-volt. Without this V+/V- supply led in via the data cable for the bus transceivers, the AMS 355*i* cannot be operated. The maximum length of the DeviceNet cable is dependent on the selected cable type and baud rate. Installation in the bus topologies is performed as shown in the above figure and with terminating resistors at both ends.

Listed in the table are the max. network expansions as a function of the used data line without repeater.

	Transmission rate								
	125 kbit/s			250 kbit/s			500 kbit/s		
Cable type	1[1)]	2[2)]	3[3)]	1	2	3	1	2	3
Max. length of master line (trunk line) in m	500	300	100	250		100	100		
Max. length of stub cable (drop line) in m	6			6			6		
Max. length of all sub cables per network in m	156			78			39		

1) Thick cable =1
2) Mid cable = 2
3) Thin cable = 3

The ready-made data lines from Leuze electronic correspond to the thin cable.

9.1.2 Communication

EDS files (**E**lectronic **D**ata **S**heet) are used for all CIP-based protocols. For the AMS 35x*i* product series, these are the following protocols:

- EtherNet/IP
- DeviceNet

You can find the EDS file at **www.leuze.com.**

The EDS file includes all communication parameters of the participants as well as the available objects. The DeviceNet communication tool reads the EDS files of the participants present in the network and uses this information to calculate the configuration data that is subsequently loaded onto the participants.

The input/output data is addressed according to the following fundamental scheme:

1. Device address (MAC ID)
   The participant is addressed with its MAC ID, which is unique in the network.
2. Object class identifier (class)
   Used as the basis for addressing the desired object class.
3. Object instance identifier (instance)
   Addressing of the object instance within the object class.
4. Attribute identifier (attribute)
   Addressing of the attribute within the object instance.
5. Service code (get, set, reset, start, stop and others...)
   The maintenance code ultimately describes the type of access to the data, e.g., reading or writing.

9.2 DeviceNet electrical connection

BUS IN (5-pin plug, A-coded)		
Pin	**Name**	**Remark**
1	**Drain**	Shield
2	**V+**	Supply voltage data V+
3	**V-**	Supply voltage data V-
4	**CAN_H**	Data signal CAN_H
5	**CAN_L**	Data signal CAN_L
Thread	**FE**	Functional earth (housing)

BUS OUT (5-pin socket, A-coded)		
Pin	**Name**	**Remark**
1	**Drain**	Shield
2	**V+**	Supply voltage data V+
3	**V-**	Supply voltage data V-
4	**CAN_H**	Data signal CAN_H
5	**CAN_L**	Data signal CAN_L
Thread	**FE**	Functional earth (housing)

Figure 9.1: DeviceNet electrical connection

1) After DeviceNet specification (Volume 3: DeviceNet Adaptation of CIP Chapter 8, Physical Layer 8-3.3 Connectors), use of the BUS OUT connection is not allowed.

Note!

In the specification, (DeviceNet Adaptation of CIP, Chapter 8, Physical Layer, 8-3-3 Connectors), the ODVA recommends connecting the AMS 355i by tapping the drop lines (see figure 9.1). In this topology suggested by the ODVA, the BUS OUT connection remains unused. If the AMS 355i is disconnected, the remaining participants can continue to be addressed in the network.

The BUS OUT connection still represents a full-fledged connection for an additional network device. If the AMS 355i is disconnected from the bus, however, all participants connected to BUS OUT are also not to be addressed in this case. For this reason, the ODVA recommends not using this typology.

9.3 Electrical data for the supply voltage – Data V+ and Data V-

Supply voltage - Data V+	11 … 25VDC
Supply voltage - Data V-	reference potential
Current consumption AMS 355*i* at Data V+	max. 80mA at 11VDC

Notice!

After specification by the ODVA, with the AMS 355i the bus transceivers are supplied via the V+/V- cables present in the data line. Without this voltage supply, the participant cannot be operated.
Only cables that satisfy the ODVA specifications may be used.

Attention!

The ready-made data lines for DeviceNet can be loaded with max. 1.4A for supplying the bus transceiver. The current consumption of the AMS 355i at the supply lines for the bus transceiver is max. 80mA at 11VDC.
When networking the bus data line to other participants via BUS OUT, ensure that the maximum load of 1.4A is not exceeded. Use a suitable power supply unit to ensure the power supply.

Notice!

*For contacting **BUS IN** and **BUS OUT**, we recommend our ready-made DeviceNet cable (see chapter 11.4.6 "Accessory ready-made cables for DeviceNet").*

9.4 DeviceNet address entry - MAC ID

Notice!

Basic operation of the display is described in chapter 8.2. To set the DeviceNet MAC ID, parameter enabling must be activated. The display is inverted after enabling the parameters.

Attention!

The laser measurement system is deactivated on the DeviceNet after parameter enabling is activated via the display. The device is reactivated on the DeviceNet after parameter enabling is exited.

9.4.1 Entering the MAC ID (address) via the display

To do this proceed as follows:

- *Activate parameter enabling.*
- *Select the DeviceNet submenu.*
- *Select the DeviceNet MAC ID (Address) menu item.*
- *Enter the DeviceNet MAC ID between 0 and 63 (default: 63).*
- *Save the DeviceNet MAC ID with Save.*
- *Deactivate parameter enabling.*

9.5 EDS file - general info

An EDS file (Electronic Data Sheet) is provided for the AMS 355*i*.

The EDS file is named "AMS355i.eds"; the corresponding icon is named "AMS355i.ico"

Both files are available in the Download area of the Leuze website: **www.leuze.com**.

The EDS file contains all identification and communication parameters of the device, as well as the available objects.

The AMS 355*i* is uniquely classified via a class 1 identity object (component of the AMS355i.eds file) for the DeviceNet scanner (master).

The identity object contains, among other things, a manufacturer-specific vendor ID, as well as an ID that describes the principle function of the participant.

The AMS 355*i* has the following identity object (class 1):

Vendor ID: 524_{Dec} / $20C_H$

Device type: 34_{Dec} / 22_H (identifies the AMS 355*i* as "encoder")

Position sensor type: 8_{Dec} / 8_H (specifies the AMS 355*i* as "absolute encoder")

The types of communication access to the data of the AMS 355*i* described by the ODVA:

- Polling
- Cyclic
- Combinations of polling and cyclic

are supported by the AMS 355*i*.

Attention!

*Communication access via **change of state** is not implemented and must not be activated in the network configuration.*

If accepting the objects without change, all parameters are set to default values. The default settings are shown in the objects described in detail in the "Default" column.

An assembly is activated by default in the EDS file. The assembly automatically communicates its inputs and outputs to the control. Further information on the assemblies can be found in chapter 9.6.5 and chapter 9.6.1.

Attention!

*The Rockwell control offers the possibility of activating the **Configuration Recovery** function. This stores the parameters defined in the EDS file in the control. If necessary, an automatic parameter download from the control to the AMS 355i takes place.*

Leuze electronic recommends activating "Configuration Recovery". This stores all parameters in the control.

If parameters are changed, the changes can be immediately reversed with the automatic parameter download (Configuration Recovery activated) after deactivating parameter enabling in the AMS 355*i*.

Attention!

*If the "Configuration Recovery" is **not activated**, the parameters changed via the display are valid. The parameters are **not automatically overwritten**.*

The parameters stored in the control can still be manually downloaded.

Notice!

In the following tables, all attributes marked in the "Access" column with "Get" in the individual objects are to be understood as inputs of the scanner (control). E.g., "Read position value" --> Class 35; instance 1; attribute 10.

Attributes marked in the "Access" column with "Set" represent outputs or parameters. Outputs are set, e.g., "Laser off"--> Class 35; instance 1; attribute 110.

Parameters are also marked with "Set" and are written to the AMS. E.g., "Change of position format" --> Class 35; instance 1; attribute 15.

9.6 EDS file - detailed description

9.6.1 Class 4 Assembly

9.6.1.1 Position value

Path			Designation	Size in bit	Data type	Default (dec)	Min (dec)	Max (dec)	Access
Cl.	Inst.	Attr.							
4	1	3	Position	32	DINT	0	-2147483648	+2147483648	Get

Instance 1, attribute 3

Input assembly length: 4 bytes

Assembly for reading out the position value. According to the definition specified by the ODVA, the assembly with instance 1 is a mandatory assembly in the encoder profile. By default, this assembly is configured in class 101.

Inst.	Byte	Bit 7	Bit 6	Bit 5	Bit 4	Bit 3	Bit 2	Bit 1	Bit 0
1	0	Position value (low byte)							
	1	Position value							
	2	Position value							
	3	Position value (high byte)							

Notice!

Negative values are displayed in two's complement.

9.6.1.2 Position value + status

Path			Designation	Size in bit	Data type	Default (dec)	Min (dec)	Max (dec)	Access
Cl.	Inst.	Attr.							
4	100	3	Position value	32	DINT	-	-21474836480	+2147483648	Get
			Status	8	Byte	-	0	31	Get
			Alarm warning	8	Byte	-	0	31	Get

Instance 100, attribute 3

Input assembly length: 6 bytes

Leuze-specific assembly

Byte 0 - byte 3: position value
Byte 4: AMS 355*i* status
Byte 5: AMS 355*i* alarms and warnings

Inst.	Byte	Bit 7	Bit 6	Bit 5	Bit 4	Bit 3	Bit 2	Bit 1	Bit 0
100	0	Position value (low byte)							

Inst.	Byte	Bit 7	Bit 6	Bit 5	Bit 4	Bit 3	Bit 2	Bit 1	Bit 0
	1	Position value							
	2	Position value							
	3	Position value (high byte)							
	4	0	0	0	Preset toggle	Preset status 1 = ON 0 = OFF	Status I/O 2 1 = ON 0 = OFF	Status I/O 1 1 = ON 0 = OFF	Laser diode ON / OFF 1 = ON 0 = OFF
	5	0	0	0	ATT 1 = ON 0 = OFF	LSR 1 = ON 0 = OFF	TMP 1 = ON 0 = OFF	PLB 1 = ON 0 = OFF	ERR 1 = ON 0 = OFF

Notice!

Negative values are displayed in two's complement.

9.6.1.3 *Velocity value + status*

Path			Designation	Size in bit	Data type	Default (dec)	Min (dec)	Max (dec)	Access
Cl.	Inst.	Attr.							
4	101	3	Velocity value	32	DINT	-	-999.999	+999.999	Get
			Status	8	Byte	-	0	63	Get
			Alarm warning	8	Byte	-	0	31	Get

Instance 101, attribute 3

Input assembly length: 6 bytes

Leuze-specific assembly

Byte 0 - byte 3: velocity value
Byte 4: AMS 355*i* velocity status
Byte 5: AMS 355*i* alarms and warnings

Inst.	Byte	Bit 7	Bit 6	Bit 5	Bit 4	Bit 3	Bit 2	Bit 1	Bit 0
100	0	Velocity value (low byte)							
	1	Velocity value							
	2	Velocity value							
	3	Velocity value (high byte)							
	4	0	0	Direction of movement 0 = pos. 1 = neg.	Movement status 1 = mov. 0 = no. mov.	Limit value 4 1 = ON 0 = OFF	Limit value 3 1 = ON 0 = OFF	Limit value 2 1 = ON 0 = OFF	Limit value 1 ON / OFF 1 = ON 0 = OFF
	5	0	0	0	ATT 1 = ON 0 = OFF	LSR 1 = ON 0 = OFF	TMP 1 = ON 0 = OFF	PLB 1 = ON 0 = OFF	ERR 1 = ON 0 = OFF

Notice!

Negative values are displayed in two's complement.

9.6.1.4 Preset value + control

Path			Designation	Size in bit	Data type	Default (dec)	Min (dec)	Max (dec)	Access
Cl.	Inst.	Attr.							
4	120	3	Preset value	32	DINT	-	-21474836480	+2147483648	Set
			Preset control	8	Byte	-	0	3	Set

Instance 120, attribute 3

Output assembly length: 5 bytes

Leuze-specific assembly

Byte 0 - byte 3: preset value
Byte 4: preset control

Inst.	Byte	Bit 7	Bit 6	Bit 5	Bit 4	Bit 3	Bit 2	Bit 1	Bit 0
120	0	Preset value (low byte)							
	1	Preset value							
	2	Preset value							
	3	Preset value (high byte)							
	4	0	0	0	0	0	0	Preset reset 1 = ON 0 = OFF	Preset teach 1 = ON 0 = OFF

Notice!

Negative values are displayed in two's complement.

9.6.2 Class 1 Identity object

Object class 1 = 01_H

Services:

- Get Attribute Single
- Reset type 0

Path			Designation	Size in bit	Data type	Default (dec)	Min (dec)	Max (dec)	Access
Cl.	Inst.	Attr.							
1	1	1	Vendor-Id	16	UINT	524	-	-	Get
		2	Device type	16	UINT	34	-		Get
		3	Product code	16	UINT	1002	-		Get
		4	Revision (Major, minor)	16	Struct{ USINT major, USINT minor};	Major = 1, Minor = 1	Major = 1, Minor = 1	Major = 127, Minor = 999	Get
		5	Status	16	WORD	See CIP specification (5-2.2.1.5 status)			Get
		6	Serial number	32	UDINT	Manufacturer specific			Get
		7	Product name	(max. 32) x 8	SHORT_STRING	"AMS 355i"			Get

In the network configuration (e.g., RS Networx),it is possible to specify when entering the individual participants in the scan list which attributes of the scanner are to be monitored from the identity object.

The selection is made in the "Electronic key" field. Attributes marked there are monitored.

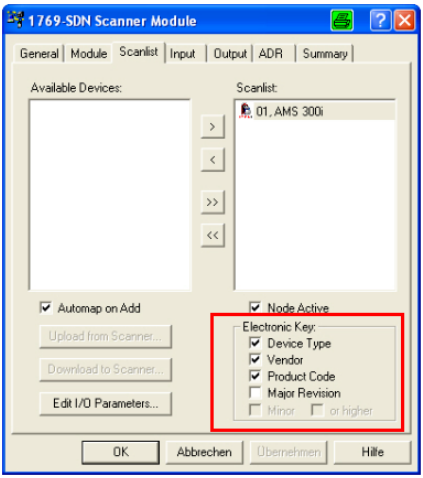

In the event of a device exchange, the major revision number should **not** be monitored. The major revision number describes the firmware version of the AMS 355*i* software within the EDS file/object 1. This may have changed during a possible device exchange. The scanner would otherwise output an error message following a device exchange.

9.6.2.1 Vendor ID

The Vendor ID assigned by ODVA for Leuze electronic GmbH + Co. KG is 524_D.

9.6.2.2 Device type

The AMS 355*i* is defined by Leuze electronic as an encoder. According to ODVA, the AMS 355*i* is assigned number $34_D = 22_H$.

9.6.2.3 Product code

The product code is an ID assigned by Leuze electronic that has no further impact on other objects.

9.6.2.4 Revision

Version number of the identity object.

9.6.2.5 Status

Principle and primary monitoring of the device, of the network and of the configuration. The entries are described by the scanner.

Bit 7	Bit 6	Bit 5	Bit 4	Bit 3	Bit 2	Bit 1	Bit 0
ext. device state				reserved	configured	reserved	owned
Bit 15	**Bit 14**	**Bit 13**	**Bit 12**	**Bit 11**	**Bit 10**	**Bit 9**	**Bit 8**
reserved				Major unrecov-erable fault	Major recover-able fault	Major unrecov-erable fault	Major recover-able fault

9.6.2.6 Serial number

For use in DeviceNet, the serial number receives a serial number converted according to CIP. CIP describes a special format for the serial number. After conversion to a CIP code, the serial number is, as before, unique, but no longer corresponds in its resolution to the serial number on the name plate.

9.6.2.7 Product name

This attribute contains a short designation of the product. Devices with the same product code may have different "product names".

9.6.3 Class 35 Position sensor object

Object class 35 = 23_H

Services:

- Get Attribute Single
- Set Attribute Single

Path			Designation	Size in bit	Data type	Default (dec)	Min (dec)	Max (dec)	Access
Cl.	Inst.	Attr.							
35	**1**	**10**	Position value	32	DINT	0	-2147483648	2147483647	Get
		11	Sensor type	16	UINT	8	-	-	Get
		12	Direction counting	8	BYTE	0	0	1	Set
		15	Position format	16	ENGUNIT	8707	see below		Set
		24	Velocity value	32	DINT	0	-999.999	999.999	Get
		25	Velocity format	16	ENGUNIT	2064	see below		Set
		26	Velocity resolution	32	UDINT	1000	1	50.000	Set
		41	Operating status	8	BYTE	0	see below		Get
		44	Alarms	16	WORD	0	see below		Get
		45	Supported alarms	16	WORD	see below			Get
		46	Alarm flag	8	BYTE	0	0	1	Get
		47	Warnings	16	WORD	0	see below		Get
		48	Supported warnings	16	WORD	see below			Get
		49	Warning flag	8	BYTE	0	0	1	Get
		50	Operating time	32	UDINT	0	0	4294967295	Get
		100	Preset value	32	DINT	0	-999.999	999.999	Set
		101	Preset teach	8	BYTE	0	0	1	Set
		102	Preset status	8	BYTE	0	0	1	Get
		103	Preset toggle	8	BYTE	0	0	1	Get
		104	Preset reset	8	BYTE	0	0	1	Set
		105	Direction of movement	8	BYTE	0	0	1	Get
		106	Movement status	8	BYTE	0	0	1	Get
		107	Free resolution	16	UINT	5	5	50.000	Set
		108	Offset value	32	DINT	0	-999.999	999.999	Set
		109	Laser status	8	BYTE	0	0	1	Get
		110	Laser control	8	BYTE	0	0	1	Set

The function of object class 35 (23_H) is defined in the CIP network specification as "position sensor object". The position sensor object describes the functions of an absolute measuring encoder. As defined in the CIP specification, attributes with address 1 to 99 are functionally predetermined. From this address range, the AMS 355*i* serves only those attributes that are functionally mapped in the AMS. Address range ≥ 100 is manufacturer specific.

9.6.3.1 Position value

Attribute 10

Read position value.

Attr.	Byte	Bit 7	Bit 6	Bit 5	Bit 4	Bit 3	Bit 2	Bit 1	Bit 0
10	0	Position value (low byte)							
	1	Position value							
	2	Position value							
	3	Position value (high byte)							

Notice!

Negative values are displayed in two's complement.

9.6.3.2 Position sensor type

Attribute 11

Specifies the encoder with ID 8_d defined via CIP as absolute measuring linear encoder.

9.6.3.3 Direction counting

Attribute 12

Defines whether the measured distance value increases (positive counting direction) or decreases (negative counting direction) with increasing distance.

0 = positive counting direction
1 = negative counting direction

9.6.3.4 Position format

Attribute 15

Configures the position format as well as the resolution. The EDS file makes available the following parameters:

Dec. value	Hex. Value	Unit	Format
8706	0x22 02	Centimeter [cm]	Metric
8707	0x22 03	Millimeter [mm]	
8708	0x22 04	Micrometer [µm]	
2048	0x08 00	Free resolution [mm]	
2049	0x08 01	Tenth of millimeter [mm/10]	
2050	0x08 02	Hundredths of millimeter [mm/100]	
2051	0x08 03	Hundredths of inch [in/100]	Inch
2052	0x08 04	Free resolution [in/100]	

Notice!

If the position format is changed from metric to inch, the velocity value is automatically converted internally to hundredths of an inch per second. If the position format is changed from inch to metric, the velocity value is automatically converted internally to millimeter per second.

9.6.3.5 Velocity value

Attribute 24

Read velocity value.

Attr.	Byte	Bit 7	Bit 6	Bit 5	Bit 4	Bit 3	Bit 2	Bit 1	Bit 0
24	0	Velocity value (low byte)							
	1	Velocity value							
	2	Velocity value							
	3	Velocity value (high byte)							

Notice!

Negative values are displayed in two's complement.

9.6.3.6 Velocity format

Attribute 25

Configures the velocity value as well as the resolution. The EDS file makes available the following parameters:

Dec. value	Hex. Value	Unit	Format
11008	0x2B 00	Meters per second [m/s]	Metric
11009	0x2B 01	Centimeters per second [cm/s]	
2064	0x08 10	Millimeters per second [mm/s]	
2065	0x08 11	Decimeters per second [dm/s]	
2066	0x08 12	Hundredths of an inch per second [in/100s]	Inch
2067	0x08 13	Meters per minute [m/min]	Metric
2068	0x08 14	Free resolution [mm/100s]	
2069	0x08 15	Free resolution [in/1000s]	Inch

Notice!

The velocity value inch per second [in/100s] and free resolution [in/1000s] can only be selected if either hundredths of an inch [in/100] or free resolution [in/100] have been selected in attribute 15 (position format).

9.6.3.7 Velocity free resolution

Attribute 26

The free resolution refers to parameters 2068 and 2069 in attribute 25 (velocity format).

For parameter 2068, the entry is made in mm/100s; for parameter 2069, the entry is made in inch/1000s.

9.6.3.8 Operating status - direction counting

Attribute 41

Bit 7	Bit 6	Bit 5	Bit 4	Bit 3	Bit 2	Bit 1	Bit 0
Vendor spec.			reserved			Scaling	Direction

Attribute 41 is the acknowledgment of the AMS 355*i* to the counting direction configured in attribute 12.

The counting direction is output in bit 0.

0 = positive counting direction
1 = negative counting direction

Bits 1 - 7 have no meaning and have status 0.

9.6.3.9 Alarms

Attribute 44

Bit 7	Bit 6	Bit 5	Bit 4	Bit 3	Bit 2	Bit 1	Bit 0
reserved						ERR	PLB
Bit 15	**Bit 14**	**Bit 13**	**Bit 12**	**Bit 11**	**Bit 10**	**Bit 9**	**Bit 8**
Vendor spec.				reserved			

The PLB and ERR status messages generated by AMS 355*i* are entered in bit 0 and bit 1.

The alarms entered here result in incorrect measurement values on the AMS 355*i*. The CIP spec. distinguishes between alarms and warnings.

The following applies for PLB and ERR:

0 = no alarm
1 = alarm

9.6.3.10 Supported alarm

Attribute 45

Attribute 45 shows which alarms specified by the position sensor object are supported by the AMS 355*i*.

Bit 7	Bit 6	Bit 5	Bit 4	Bit 3	Bit 2	Bit 1	Bit 0
reserved						1	1
Bit 15	**Bit 14**	**Bit 13**	**Bit 12**	**Bit 11**	**Bit 10**	**Bit 9**	**Bit 8**
Vendor spec.				reserved			

Bit 0 =1; PLB alarm is supported by the AMS 355*i*.

Bit 1 =1; ERR alarm is supported by the AMS 355*i*.

Bit 2 to bit 15 = 0

9.6.3.11 Alarm flag

Attribute 46

The attribute evaluates the alarms supported in attribute 45 in an OR function (collective alarm).

9.6.3.12 Warnings

Attribute 47

According to the CIP specification, warning messages are messages that signal the exceeding of internal limit values but do not result in incorrect measurement values.

Status messages ATT, LSR and TMP are entered as warnings by the AMS 355*i*. For this purpose, an area is reserved in the CIP spec. for device-specific data (bits 13-15).

Bit 7	Bit 6	Bit 5	Bit 4	Bit 3	Bit 2	Bit 1	Bit 0
–	–	–	–	–	–	–	–
Bit 15	**Bit 14**	**Bit 13**	**Bit 12**	**Bit 11**	**Bit 10**	**Bit 9**	**Bit 8**
ATT	LSR	TMP	–	–	–	–	–

9.6.3.13 Supported warnings

Attribute 48

Attribute 48 shows which warnings specified by the position sensor object are supported by the AMS 355*i*.

Bit 7	Bit 6	Bit 5	Bit 4	Bit 3	Bit 2	Bit 1	Bit 0
–	–	–	–	–	–	–	–
Bit 15	**Bit 14**	**Bit 13**	**Bit 12**	**Bit 11**	**Bit 10**	**Bit 9**	**Bit 8**
1	1	1	–	–	–	–	–

Bit 13 =1; TMP warning is supported by the AMS 355*i*.

Bit 14 =1; LSR warning is supported by the AMS 355*i*.

Bit 15 =1; ATT warning is supported by the AMS 355*i*.

Bit 0 to bit 12 = 0

9.6.3.14 Warning flag

Attribute 49

The attribute evaluates the warnings supported in attribute 48 in an OR function (collective warning).

9.6.3.15 Operating time

Attribute 50

As long as the AMS 355*i* is connected to power, the value is increased in increments of 1/10 hours. The value cannot be reset.

9.6.3.16 Preset value

Attribute 100

With the attribute, it is possible to set the current position value to a desired position value.

9.6.3.17 Preset teach

Attribute 101

The attribute activates the value configured in attribute 100.

Notice!

As a result of this
- attribute 103 is toggled,
- attribute 102 is set.

9.6.3.18 Preset status

Attribute 102

The attribute specifies whether the preset function is activated.

1 = preset active
0 = preset inactive

9.6.3.19 Preset toggle

Attribute 103

The attribute is toggled after the preset value is activated.

Notice!

Activation of the preset value via attribute 101.

9.6.3.20 Preset reset

Attribute 104

The attribute is used for deleting the set preset value. The preset status (attribute 102) is set to inactive.

1 = delete preset value.

Notice!

Attribute 103 is toggled.

9.6.3.21 Direction of movement

Attribute 105

At a velocity > 100 mm/s, the attribute indicates the direction of movement.

0 = positive direction of movement
1 = negative direction of movement

The definition of the direction of movement is dependent on class 35,instance 1, attribute 12:

- Count direction positive:
  Measurement values become **larger** if the reflector moves away from the AMS 355*i*.
  In this case, the positive direction of movement = 0 in attribute 105.
- Counting direction negative:
  Measurement values become **smaller** if the reflector moves away from the AMS 355*i*.
  In this case, the positive direction of movement = 1 in attribute 105.

9.6.3.22 Movement status

Attribute 106

The attribute indicates whether the absolute value is large enough (> 100 mm/s) to register a movement.

0 = |cur. velocity| < 100 mm/s
1 = |cur. velocity| > 100 mm/s

9.6.3.23 Free resolution

Attribute 107

The free resolution refers to parameters 2048 and 2052 in attribute 15.

For parameter 2048, the entry is made in mm/1000; for parameter 2052, the entry is made in inch/100,000.

Example:

For a free resolution of e.g., 0.875 mm, the value "875" must be entered for parameter 2048.

9.6.3.24 Offset

Attribute 108

Measurement value at the interface = measured distance + offset.

9.6.3.25 Laser diode laser status

Attribute 109

The attribute signals the status of the laser diode.

ПРОМЭЛЕКТРОНИКА / sales@prom-elec.com

0 = laser diode on
1 = laser diode off

9.6.3.26 Laser diode laser control

Attribute 110

The laser can be switched on and off via this attribute.

1 = laser diode on
0 = laser diode off

9.6.4 Class 100 Display configuration

Object class 100 = 64_H

Services:

- Get Attribute Single
- Set Attribute Single

Path			Designation	Size in bit	Data type	Default (dec)	Min (dec)	Max (dec)	Access
Cl.	Inst.	Attr.							
100	1	1	Language selection	8	BYTE	0	0	16	Set
		2	Password protection	8	BYTE	0	0	1	Set
		3	Password	16	UINT	0	0	9.999	Set
		4	Illumination	8	BYTE	0	0	1	Set
		5	Contrast	8	BYTE	1	0	3	Set
		6	Expanded heating control	8	BYTE	0	0	1	Set

9.6.4.1 Language selection

Attribute 1

The attribute can be used to configure the language that appears in the display.

The following table provides information on the languages available for selection.

Language	Value
English	0
German	1
Italian	2
Spanish	3
French	4

9.6.4.2 Password protection

Attribute 2

The attribute activates password protection.

1 = password protection active
0 = password protection inactive

9.6.4.3 Password

Attribute 3

The attribute specifies the password. The password protection attribute (attribute 2) must be active. Value range of the password: 0000 - 9999.

The master password **2301** can be used to activate parameter enabling via the display/ panel.

9.6.4.4 *Illumination*

This attribute is used to set whether the display illumination is to be switched off 10 minutes after the last button operation or whether the illumination is always to be on.

0 = display illumination off 10 minutes after the last button operation
1 = display illumination always on

9.6.4.5 *Contrast*

When exposed to extreme ambient temperatures, the display contrast may change. This attribute adjusts the display illumination.

Value	Contrast
0	weak
1	medium
2	strong

9.6.4.6 *Expanded heating control*

Expanded heating control can be activated via this attribute.

The expanded heating control range of the internal device heating could possibly prevent formation of condensation on the optics of the AMS 358*i*. The internal heating of the AMS 358*i* is switched on when setting the parameter at high ambient temperatures (30 °C).

In the case of very large and fast changes to the temperature and humidity, the power of the internal heating may not be sufficient to prevent the formation of condensation.

	On	Off
0 = Switch on/off temperature of the internal heating:	10 °C (50 °F)	15 °C (59 °F)
1 = Switch on/off temperature of the internal heating:	30 °C (86 °F)	35 °C (95 °F)

9.6.5 Class 101 Selection assembly

Services:

- Get Attribute Single
- Set Attribute Single

Path			Designation	Size in bit	Data type	Default (dec)	Min (dec)	Max (dec)	Access
Cl.	Inst.	Attr.							
101	1	1	Input assembly ID	8	BYTE	1	see below		Set
		2	Output assembly ID	8	BYTE	120	see below		

9.6.5.1 *Input assembly*

Attribute 1

The attribute makes available an assembly for inputs. Via the "Input assembly" EDS parameter, an assembly is selected that **automatically** reads out data of the AMS 355*i* with high priority according to an arbitration cycle defined in the DeviceNet scanner.

Leuze electronic has compiled supplemental input assemblies that group together the most important data of the AMS 355*i*.

No individual assemblies can be created by the customer, since these are a component of the EDS file supplied by Leuze.

A detailed description of the assemblies offered by Leuze electronic can be found beginning with chapter 9.6.1.

9.6.5.2 *Output assembly*

Attribute 2

The attribute makes available an assembly for outputs. Via the "Output assembly" EDS parameter, an assembly is selected that automatically writes data to the AMS 355*i* with high priority according to an arbitration cycle defined in the DeviceNet scanner.

No individual assemblies can be created by the customer, since these are a component of the EDS file supplied by Leuze.

A detailed description of the assemblies offered by Leuze electronic can be found beginning with chapter 9.6.1.4.

Attention!

When configuring with RS Networx, Rockwell Automation requires that the memory range of the assemblies selected in object class 101 be configured. If the assemblies in object class 101 are changed, the memory range of the scanner must be adapted for assemblies.

This is illustrated in the following screenshot from the RS NetworkX configuration tool:

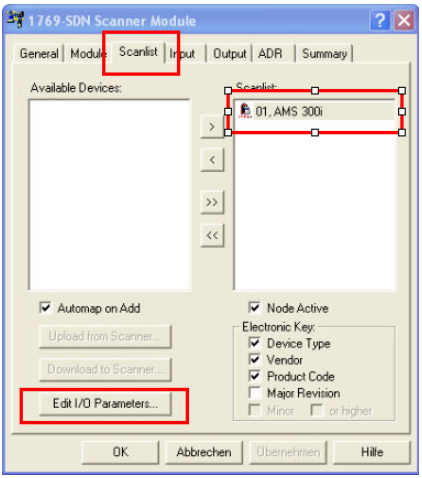

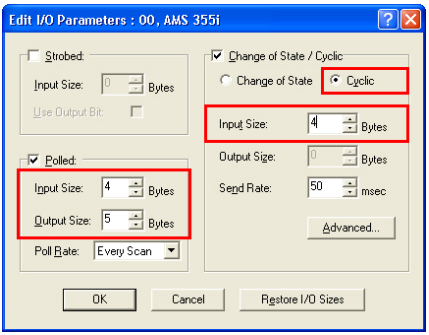

9.6.6 Class 103 Switching inputs/outputs

Class 103, instance 1 describes I/O 1 (PIN 2/M12 Power)
Class 103, instance 2 describes I/O 2 (PIN 4/M12 Power)

Object class 103 = 67_H
Services:

- Get Attribute Single
- Set Attribute Single

Path			Designation	Size in bit	Data type	Default (dec)	Min (dec)	Max (dec)	Access
Cl.	Inst.	Attr.							
103	**1**	**1**	Function I/O (input/output)	8	BYTE	1	0	1	Set
		2	Activation (high/low active)	8	BYTE	0	0	1	Set
		3	Output function	16	WORD	192	0	511	Set
		4	Input function	8	BYTE	0	0	3	Set
		5	Status (input/output)	8	BYTE	0	0	1	Get
		6	Activation output	8	BYTE	0	0	1	Set
103	**2**	**1**	Function I/O (input/output)	8	BYTE	1	0	1	Set
		2	Activation (high/low active)	8	BYTE	0	0	1	Set
		3	Output function	16	WORD	56	0	511	Set
		4	Input function	8	BYTE	0	0	3	Set
		5	Status (input/output)	8	BYTE	0	0	1	Get
		6	Activation output	8	BYTE	0	0	1	Set

9.6.6.1 Definition of input/output

Instance 1, attribute 1 (PIN 2/M12 Power)
Instance 2, attribute 1 (PIN 4/M12 Power)

This attribute defines whether PIN 2/PIN 4 on the M12 power connection functions as an input or an output.

1 = output
0 = input

Attribute description for the case that attribute 1 is selected as switching input in instance 1 or 2.

9.6.6.2 Activation for inputs

Instance 1, attribute 2 (PIN 2/M12 Power)
Instance 2, attribute 2 (PIN 4/M12 Power)

The switching input of the AMS 355*i* is edge-triggered.

0 = switching input responds to a falling edge (transition from logical 1 to 0)
1 = switching input responds to a rising edge (transition from logical 0 to 1)

9.6.6.3 *Function assignment of the inputs*

Instance 1, attribute 4 (PIN 2/M12 Power)

Instance 2, attribute 4 (PIN 4/M12 Power)

Attribute 4 defines which function is to be triggered when the input is set in the AMS 355*i*.

Bit 7	Bit 6	Bit 5	Bit 4	Bit 3	Bit 2	Bit 1	Bit 0
-	-	-	-	-	-	Laser ON/OFF	Preset teach

Bit 0 = preset teach

The switching input responds to the edge set in attribute 2. The preset value is accepted at the position at which the switching input detects an edge change as defined in attribute 2.

Bit 1 = laser ON/OFF

The switching input responds to the edge set in attribute 2. The laser is switched OFF if the switching input detects an edge change as described in attribute 2. If the opposite edge is detected at the switching input, the laser is switched back ON.

9.6.6.4 *Input function status*

Instance 1, attribute 5 (PIN 2/M12 Power)

Instance 2, attribute 5 (PIN 4/M12 Power)

0 = input function is inactive. Neither laser ON/OFF nor preset teach is active.
1 = input function is active. Laser ON/OFF or preset teach or both were activated.

Attribute description for the case that attribute 1 is selected as switching output in instance 1 or 2.

9.6.6.5 *Activation for outputs*

Instance 1, attribute 2 (PIN 2/M12 Power)

Instance 2, attribute 2 (PIN 4/M12 Power)

The attribute defines the level of the output if the "output" event occurs.

0 = from logical 1 to logical 0 if the "output" event occurs (see attribute 3)
1 = from logical 0 to logical 1 if the "output" event occurs (see attribute 3)

9.6.6.6 *Function assignment of the hardware outputs*

Instance 1, attribute 3 (PIN 2/M12 Power)

Instance 2, attribute 3 (PIN 4/M12 Power)

The attribute defines which event triggers activation of the output. The individual functions are OR linked.

Bit 7	Bit 6	Bit 5	Bit 4	Bit 3	Bit 2	Bit 1	Bit 0
Hardware (ERR)	Plausibility (PLB)	Laser (LSR)	Temperature (TMP)	Intensity (ATT)	Velocity limit value violated	reserved	
Bit 15	**Bit 14**	**Bit 13**	**Bit 12**	**Bit 11**	**Bit 10**	**Bit 9**	**Bit 8**
reserved							Dynamic output

For instance 1 attribute 3, the default is defined as 192_d / 00 $C0_h$ / 0000 0000 1100 0000_b. This means that at the output (PIN 2), an edge change occurs as defined in attribute 2 with the ERR or PLB messages.

For instance 2 attribute 3, the default is defined as 56_d / 00 38_h / 0000 0000 0011 1000_b. This means that at the output (PIN 4), an edge change occurs as defined in attribute 2 with the LSR or TMP or ATT messages.

9.6.6.7 *Output function status*

Instance 1, attribute 5 (PIN 2/M12 Power)

Instance 2, attribute 5 (PIN 4/M12 Power)

0 = output function is inactive. No event from attribute 3 is active.
1 = output function is active. At least one event from attribute 3 has been activated.

9.6.6.8 *Activation output (dynamic output)*

Instance 1, attribute 6 (PIN 2/M12 Power)

Instance 2, attribute 6 (PIN 4/M12 Power)

With the dynamic output, the hardware outputs (PIN 2/PIN 4) can be set via the control software. Activation is via bit 8.

0 = dynamic output inactive
1 = the hardware output(s) is(are) set as defined in attribute 2

The outputs are dynamically set via 256_d (256 = status message bits 7 to 2 are disregarded).

9.6.7 Class 104 Behavior in the case of error

Services:

- Get Attribute Single
- Set Attribute Single

Path			Designation	Size in bit	Data type	Default (dec)	Min (dec)	Max (dec)	Access
Cl.	Inst.	Attr.							
104	**1**	**1**	Position value in the case of error	8	BYTE	1	0	1	Set
		2	Suppress position status	8	BYTE	1	0	1	Set
		3	Error delay (position)	8	BYTE	1	0	1	Set
		4	Error delay time (position)	16	UINT	100	100	1.000	Set
		5	Velocity in the case of failure	8	BYTE	1	0	1	Set
		6	Suppress velocity status	8	BYTE	1	0	1	Set
		7	Error delay (velocity)	8	BYTE	1	0	1	Set
		8	Error delay time (velocity)	16	UINT	200	200	1.000	Set

9.6.7.1 Position value in the case of failure

Attribute 1

The attribute specifies which position is transmitted in the case of an error after the "error delay time - position" elapses.

0 = last valid value
1 = value 0

9.6.7.2 Error delay - position status

Attribute 2

The attribute specifies whether the PLB status bit (implausible measurement value) is set immediately or after the "error delay time - position" elapses.

0 = PLB status bit is set immediately
1 = PLB status bit is set with a delay

9.6.7.3 Error delay - position

Attribute 3

The attribute specifies whether—in the case of an error—the position value immediately outputs the value of attribute 1 (0 or last valid value) or the last valid position value for the configured error delay time (attribute 4).

0 = error delay deactivated
1 = error delay activated

9.6.7.4 Error delay time - position

Attribute 4

Errors that occur are suppressed for the configured time. If no valid position value can be ascertained during the configured time, the last valid position value is output. If the error continues after the time elapses, the value configured in the "Position value in the case of error" attribute (attribute 1) is output. The error delay time is specified in milliseconds [ms] and must be a value between 100 and 1000.

9.6.7.5 Velocity in the case of error

Attribute 5

The attribute specifies which velocity is transmitted in the case of an error after the "error delay time - velocity" elapses.

0 = last valid value
1 = value 0

9.6.7.6 Error delay - velocity status

Attribute 6

The attribute specifies whether the PLB status bit (implausible measurement value) is set immediately or after the "error delay time - velocity" elapses.

0 = PLB status bit is set immediately
1 = PLB status bit is set with a delay

9.6.7.7 Error delay - velocity

Attribute 7

The attribute specifies whether—in the case of an error—the velocity value immediately outputs the value of attribute 5 (0 or last valid value) or the last valid velocity value for the configured error delay time (attribute 8).

0 = error delay deactivated
1 = error delay activated

9.6.7.8 Error delay time - velocity

Attribute 8

Errors that occur are suppressed for the configured time. If no valid velocity value can be ascertained during the configured time, the last valid velocity value is output. If the error continues after the time elapses, the value configured in the "Velocity in the case of error" attribute (attribute 5) is output. The error delay time is specified in milliseconds [ms] and must be a value between 200 and 1000.

9.6.8 Class 105 Velocity monitoring

Class 105, instance 1: attributes for velocity limit value 1

Class 105, instance 2: attributes for velocity limit value 2

Class 105, instance 3: attributes for velocity limit value 3

Class 105, instance 4: attributes for velocity limit value 4

Services:

- Get Attribute Single
- Set Attribute Single

Path			Designation	Size in bit	Data type	Default (dec)	Min (dec)	Max (dec)	Access
Cl.	Inst.	Attr.							
105	**1**	**1**	Enable	8	BYTE	0	0	1	Set
		2	Switching mode	8	BYTE	0	0	1	Set
		3	Direction selection	8	BYTE	0	0	1	Set
		4	Velocity limit value	16	UINT	0	0	20.000	Set
		5	Velocity hysteresis	16	UINT	100	0	20.000	Set
		6	Limit value range start	32	DINT	0	-999.999	999.999	Set
		7	Limit value range end	32	DINT	0	-999.999	999.999	Set
		8	Limit value status	8	BYTE	0	0	1	Get
		9	Limit value comparison	8	BYTE	0	0	1	Get
105	**2**	**1**	Enable	8	BYTE	0	0	1	Set
		2	Switching mode	8	BYTE	0	0	1	Set
		3	Direction selection	8	BYTE	0	0	1	Set
		4	Velocity limit value	16	UINT	0	0	20.000	Set
		5	Velocity hysteresis	16	UINT	100	0	20.000	Set
		6	Limit value range start	32	DINT	0	-999.999	999.999	Set
		7	Limit value range end	32	DINT	0	-999.999	999.999	Set
		8	Limit value status	8	BYTE	0	0	1	Get
		9	Limit value comparison	8	BYTE	0	0	1	Get
105	**3**	**1**	Enable	8	BYTE	0	0	1	Set
		2	Switching mode	8	BYTE	0	0	1	Set
		3	Direction selection	8	BYTE	0	0	1	Set
		4	Velocity limit value	16	UINT	0	0	20.000	Set
		5	Velocity hysteresis	16	UINT	100	0	20.000	Set
		6	Limit value range start	32	DINT	0	-999.999	999.999	Set
		7	Limit value range end	32	DINT	0	-999.999	999.999	Set
		8	Limit value status	8	BYTE	0	0	1	Get
		9	Limit value comparison	8	BYTE	0	0	1	Get
105	**4**	**1**	Enable	8	BYTE	0	0	1	Set
		2	Switching mode	8	BYTE	0	0	1	Set
		3	Direction selection	8	BYTE	0	0	1	Set
		4	Velocity limit value	16	UINT	0	0	20.000	Set
		5	Velocity hysteresis	16	UINT	100	0	20.000	Set
		6	Limit value range start	32	DINT	0	-999.999	999.999	Set
		7	Limit value range end	32	DINT	0	-999.999	999.999	Set
		8	Limit value status	8	BYTE	0	0	1	Get
		9	Limit value comparison	8	BYTE	0	0	1	Get

Each of the described attributes applies for instances 1 - 4

9.6.8.1 Velocity limit value - enable

Attribute 1

The attribute activates the respective velocity monitoring.

0 = not active
1 = active

9.6.8.2 Velocity limit value - switching type

Attribute 2

The attribute specifies whether a check should be performed to determine whether the velocity limit value is exceeded or not met (attributes 3 and 4).

0 = check whether value is exceeded
1 = check whether value is not met

9.6.8.3 Velocity limit value - direction selection

Attribute 3

The attribute specifies whether the velocity check is to be direction dependent or direction independent.

If a direction-dependent limit value check is activated via attribute 2, the values of range start and range end also define the direction. The check is always performed from range start to range end. For example, if the range start is "5500" and the range end is "5000", the direction-dependent check is only performed in the direction from "5500" to "5000". The limit value is not active in the opposite direction.

If the check is independent of direction, the order of range start and range end is irrelevant.

If the value is exceeded or not met, the limit value status (attribute 7) and, if applicable, the output are set via class 103, instance 1 or 2, attribute 3 depending on the selected switching mode.

0 = direction independent
1 = direction dependent

9.6.8.4 Velocity limit value - velocity limit value

Attribute 4

The limit value configured in attribute 3 is compared to the measured ACTUAL velocity. The entry is made in mm/s or inch/100 s.

9.6.8.5 Velocity limit value - velocity hysteresis

Attribute 5

Attribute 4 describes the switching hysteresis for the value entered in attribute 3 to prevent bouncing of the signal. The entry is made in mm/s or inch/100 s.

9.6.8.6 Velocity limit value - limit value range start

Attribute 6

The limit value is monitored beginning at this position. The value is specified in mm or inch/100.

If the values for range start and range end are the same, velocity monitoring is not activated.

9.6.8.7 Velocity limit value - limit value range end

Attribute 7

The limit value is monitored beginning at this position. The value is specified in mm or inch/100.

If the values for range start and range end are the same, velocity monitoring is not activated.

9.6.8.8 Velocity limit value - limit value status

Attribute 8

The attribute signals that the configured limit values have been exceeded.

0 = limit values maintained
1 = limit values exceeded.

9.6.8.9 Velocity limit value - limit value comparison

Attribute 9

The attribute indicates whether the respective velocity limit value is compared with the configured limit value.

0 = comparison inactive
1 = comparison active

10 Diagnostics and troubleshooting

10.1 Service and diagnostics in the display of the AMS 355*i*

In the main menu of the AMS 355*i*, expanded "Diagnostics" can be called up under the Service heading.

```
Service
 Status messages
 Diagnostics
 Expanded diagnostics
```

From the Service main menu, press the enter button ↵ to access the underlying menu level.

Use the up/down buttons ▲ ▼ to select the corresponding menu item in the selected level; use the enter button ↵ to activate the selection.

Return from any sub-level to the next-higher menu item by pressing the ESC button ESC.

10.1.1 Status messages

The status messages are written in a ring memory with 25 positions. The ring memory is organized according to the FIFO principle. No separate activation is necessary for storing the status messages. Power OFF clears the ring memory.

```
Status messages
1: - / - / -
2: - / - / -
3: - / - / -
```

Basic representation of the status messages

n: Type / No. / 1

Meaning:

n:	memory position in the ring memory
Type:	type of message: **I** = info, **W** = warning, **E** = error, **F** = severe system error
No:	internal error detection
1:	frequency of the event (always "1", since no summation occurs)

The status messages within the ring memory are selected with the up/down buttons ▲ ▼. The enter button ↵ can be used to call up **detailed information** on the corresponding status messages with the following details:

Detailed information about a status message

Type: type of message + internal counter

UID: Leuze internal coding of the message

ID: description of the message

Info: not currently used

Within the detailed information, the enter button ↵ can be pressed again to activate an **action menu** with the following functions:

- Acknowledge message
- Delete message
- Acknowledge all
- Delete all

10.1.2 Diagnostics

The diagnostics function is activated by selecting the `Diagnostics` menu item. The ESC button ESC deactivates the diagnostics function and clears the contents of the recordings.

The recorded diagnostic data are displayed in 2 fields. In the upper half of the display, status messages of the AMS and the bar graph are displayed. The lower half contains information that assists in a Leuze-internal evaluation.

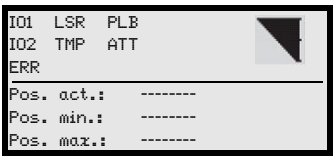

Use the up/down buttons ▲ ▼ to scroll in the bottom half between various displays. The contents of the scrollable pages are intended solely for Leuze for internal evaluation.

The diagnostics have no influence on the communication to the host interface and can be activated during operation of the AMS 355*i*.

10.1.3 Expanded diagnostics

The `Expanded diagnostics` menu item is used for Leuze-internal evaluation.

10.2 General causes of errors

The LEDs for PWR and Net are designed as bicolor LEDs. A change in color from red/green and a static/flashing display facilitate further diagnostics.

After power ON, a test of the Power LED and Net LED is performed in the following sequence:

1. LEDs off.
2. LEDs are switched to green for approx. 0.25 s.

3. LEDs are switched to red for approx. 0.25s.
4. LEDs off.

This is followed by the status display for the power LED (see chapter 9.3) and the Net LED.

10.2.1 Power LED

See also chapter 8.2.2.

Error	Possible error cause	Measure
PWR LED "OFF"	No supply voltage connected	Check supply voltage.
	Hardware error	Send in device.
PWR-LED "flashes red"	Light beam interruption	Check alignment.
	Plausibility error	Traverse rate >10m/s.
PWR-LED "static red"	Hardware error	For error description, see display, It may be necessary to send in the device.

Table 10.1: General causes of errors

10.3 Interface errors

10.3.1 Net LED

Notice!

DeviceNet scanners from Rockwell Automation display an error code via a 2-digit display. The error code provides further information on possible failure causes.

For further information on the LED status displays, see chapter 8.2.2 "LED status displays".

Error	Possible error cause	Measure
Net LED "OFF"	Power off on AMS 355*i*	Check supply voltage/wiring.
	Bus OFF by scanner	Switch bus online.
	No V+/V-	Check V+/V-.
	DUP MAC ID test running	
Net LED "flashes red"	Time-out in bus communication	
	AMS 355*i* not in the scanner scan list	Is AMS 355*i* present in the scan list, or is DeviceNet deactivated on the AMS 355*i*?
	General network error	Check termination.
	Wrong baud rate selected	Check V+/V-. Check baud rate setting. Note error code on scanner.
Net LED "static red"	No bus communication	Perform reset on scanner. Replace scanner. Note error code on scanner.
	Wrong baud rate selected	Check baud rate setting.

Table 10.2: Bus error

Error	Possible error cause	Measure
Net LED "flashes green"	No communication can be established	AMS 355*i* present in the scan list?
	The AMS 355*i* is not listed in the scan list of the master	Bus off on scanner. Note error code on scanner.
Net LED "flashes green/ red"	The AMS 355*i* has detected a violation of the communication rules. Bit error Acknowledgment error Stuff error CRC error Form error	Note error code on scanner.

Table 10.2: Bus error

10.4 Status display in the display of the AMS 355*i*

Display	Possible error cause	Measure
PLB (implausible measurement values)	Laser beam interruption	Laser spot must always be incident on the reflector.
	Laser spot outside of reflector	Traverse rate < 10 m/s?
	Measurement range for maximum distance exceeded	Restrict traversing path or select AMS with larger measurement range.
	Velocity greater than 10 m/s	Reduce velocity.
	Ambient temperature far outside of the permissible range (TMP display; PLB)	Select AMS with heating or ensure cooling.
ATT (insufficient received signal level)	Reflector soiled	Clean reflector or glass lens.
	Glass lens of the AMS soiled	
	Performance reduction due to snow, rain, fog, condensing vapor, or heavily polluted air (oil mist, dust)	Optimize usage conditions.
	Laser spot only partially on the reflector	Check alignment.
	Protective foil on the reflector	Remove protective foil from reflector.
TMP (operating temperature outside of specification)	Ambient temperatures outside of the specified range	In case of low temperatures, remedy may be an AMS with heating. If temperatures are too high, provide cooling or change mounting location.
LSR Laser diode warning	Laser diode prefailure message	Send in device at next possible opportunity to have laser diode replaced. Have replacement device ready.
ERR Hardware error.	Indicates an uncorrectable error in the hardware	Send in device for repair.

Notice!

*Please use **chapter 10 as a master copy** should servicing be required.*
Cross the items in the "Measures" column which you have already examined, fill out the following address field and fax the pages together with your service contract to the fax number listed below.

Customer data (please complete)

Device type:	
Company:	
Contact partner / department:	
Phone (direct):	
Fax:	
Street / No:	
ZIP code/City:	
Country:	

Leuze Service fax number:

+49 7021 573 - 199

11 Type overview and accessories

11.1 Type key

AMS 3xx *i* yyy H

Heating option	H =	With heating
Sensing distance	40	Max. operating range in m
	120	Max. operating range in m
	200	Max. operating range in m
	300	Max. operating range in m
	i =	Integrated fieldbus technology
Interface	00	RS 422/RS 232
	01	RS 485
	04	PROFIBUS DP / SSI
	08	TCP/IP
	35	CANopen
	38	EtherCAT
	48	PROFINET RT
	55	DeviceNet
	58	Ethernet/IP
	84	Interbus
	AMS	**A**bsolute **M**easuring **S**ystem

11.2 type overview AMS 355*i* (DeviceNet)

Type designation	Description	Part no.
AMS 355*i* 40	40 m operating range, DeviceNet interface	50113717
AMS 355*i* 120	120 m operating range, DeviceNet interface	50113718
AMS 355*i* 200	200 m operating range, DeviceNet interface	50113719
AMS 355*i* 300	300 m operating range, DeviceNet interface	50113720
AMS 355*i* 40 H	40 m operating range, DeviceNet interface, integrated heating	50113721
AMS 355*i* 120 H	120 m operating range, DeviceNet interface, integrated heating	50113722
AMS 355*i* 200 H	200 m operating range, DeviceNet interface, integrated heating	50113723
AMS 355*i* 300 H	300 m operating range, DeviceNet interface, integrated heating	50113724

Table 11.1: Type overview AMS 355*i*

11.3 Overview of reflector types

Type designation	Description	Part no.
Reflective tape 200x200-S	Reflective tape, 200x200mm, self-adhesive	50104361
Reflective tape 500x500-S	Reflective tape, 500x500mm, self-adhesive	50104362
Reflective tape 914x914-S	Reflective tape, 914x914mm, self-adhesive	50108988
Reflective tape 200x200-M	Reflective tape, 200x200mm, affixed to aluminum plate	50104364
Reflective tape 500x500-M	Reflective tape, 500x500mm, affixed to aluminum plate	50104365
Reflective tape 914x914-M	Reflective tape, 914x914mm, affixed to aluminum plate	50104366
Reflective tape 200x200-H	Heated reflective tape, 200 x 200mm	50115020
Reflective tape 500x500-H	Heated reflective tape, 500 x 500mm	50115021
Reflective tape 914x914-H	Heated reflective tape, 914 x 914mm	50115022

Table 11.2: Overview of reflector types

11.4 Accessories

11.4.1 Accessory mounting bracket

Type designation	Description	Part no.
MW OMS/AMS 01	Mounting bracket for mounting the AMS 355*i* to horizontal surfaces	50107255

Table 11.3: Accessory mounting bracket

11.4.2 Accessory deflector unit

Type designation	Description	Part no.
US AMS 01	Deflector unit with integrated mounting bracket for the AMS 355*i*. Variable 90° deflection of the laser beam in various directions	50104479
US 1 OMS	Deflector unit without mounting bracket for simple 90° deflection of the laser beam	50035630

Table 11.4: Accessory deflector unit

11.4.3 Accessory M12 connector

Type designation	Description	Part no.
KD 01-5-BA	M12 connector, A-coded socket, 5-pin, BUS IN	50040097
KD 01-5-SA	M12 connector, A-coded plug, 5-pin, BUS OUT	50040098
KD 095-5A	M12 connector, A-coded socket, 5-pin, Power (PWR)	50020501

Table 11.5: Accessory M12 connector

11.4.4 Accessory terminating resistor

Type designation	Description	Part no.
TS 01-4-SA	120 ohm M12 terminating resistor for DeviceNet BUS OUT	50040099

Table 11.6: Accessory terminating resistor

11.4.5 Accessory ready-made cables for voltage supply

Contact assignment/wire color of PWR connection cable

PWR connection cable (5-pin socket, A-coded)			
PWR 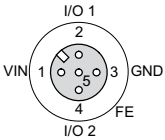 **M12 socket (A-coded)**	**Pin**	**Name**	**Core color**
	1	VIN	**brown**
	2	I/O 1	**white**
	3	GND	**blue**
	4	I/O 2	**black**
	5	FE	**gray**
	Thread	FE	**bare**

Specifications of the cables for voltage supply

Operating temperature range in rest state: -30°C … +70°C
in motion: -5°C … +70°C

Material sheathing: PVC

Bending radius > 50 mm

Order codes of the cables for voltage supply

Type designation	Description	Part no.
K-D M12A-5P-5m-PVC	M12 socket, A-coded, axial plug outlet, open cable end, cable length 5 m	50104557
K-D M12A-5P-10m-PVC	M12 socket, A-coded, axial plug outlet, open cable end, cable length 10 m	50104559

11.4.6 Accessory ready-made cables for DeviceNet

Contact assignments of DeviceNet connection cable

DeviceNet connection cable (5-pin socket/plug, A-coded)

BUS OUT

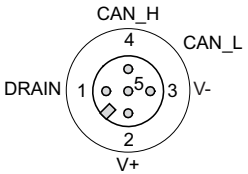

M12 socket (A-coded)

BUS IN

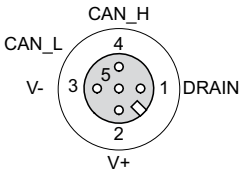

M12 plug (A-coded)

Pin	Name	Core color	Remark
1	Drain	-	**Shield**
2	V+	red	**Supply voltage data V+**
3	V-	black	**Supply voltage data V-**
4	CAN_H	white	**Data signal CAN_H**
5	CAN_L	blue	**Data signal CAN_L**
Thread	FE	-	**Functional earth (housing)**

Specifications of the DeviceNet connection cable

Operating temperature range — in rest state: -40°C … +80°C
in motion: -5°C … +80°C

Material — the cables fulfill the DeviceNet requirements, free of halogens, silicone and PVC

Bending radius — > 80mm, suitable for drag chains

Order codes for DeviceNet connection cables

Type designation	Remark	Part no.
KB DN/CAN-2000-BA	M12 socket for BUS IN, axial connector, open cable end, cable length 2m	50114692
KB DN/CAN-5000-BA	M12 socket for BUS IN, axial connector, open cable end, cable length 5m	50114696
KB DN/CAN-10000-BA	M12 socket for BUS IN, axial connector, open cable end, cable length 10m	50114699
KB DN/CAN-30000-BA	M12 socket for BUS IN, axial connector, open cable end, cable length 30m	50114701
KB DN/CAN-2000-SA	M12 plug for BUS OUT, axial connector, open cable end, cable length 2m	50114693
KB DN/CAN-5000-SA	M12 plug for BUS OUT, axial connector, open cable end, cable length 5m	50114697
KB DN/CAN-10000-SA	M12 plug for BUS OUT, axial connector, open cable end, cable length 10m	50114700
KB DN/CAN-30000-SA	M12 plug for BUS OUT, axial connector, open cable end, cable length 30m	50114702
KB DN/CAN-1000-SBA	M12 plug + M12 socket for DeviceNet, axial connectors, cable length 1m	50114691
KB DN/CAN-2000-SBA	M12 plug + M12 socket for DeviceNet, axial connectors, cable length 2m	50114694
KB DN/CAN-5000-SBA	M12 plug + M12 socket for DeviceNet, axial connectors, cable length 5m	50114698

12 Maintenance

12.1 General maintenance information

With normal use, the laser measurement system does not require any maintenance by the operator.

Cleaning

In the event of dust build-up or if the (ATT) warning message is displayed, clean the device with a soft cloth; use a cleaning agent (commercially available glass cleaner) if necessary.

Also check the reflector for possible soiling.

Attention!

Do not use solvents and cleaning agents containing acetone. Use of such solvents could blur the reflector, the housing window and the display.

12.2 Repairs, servicing

Attention!

Access to or changes on the device, except where expressly described in this operating manual, are not authorized.
The device must not be opened. Failure to comply will render the guarantee void. Warranted features cannot be guaranteed after the device has been opened.

Repairs to the device must only be carried out by the manufacturer.

↳ *Contact your Leuze distributor or service organization should repairs be required. The addresses can be found on the inside of the cover and on the back.*

Notice!

When sending the laser measurement systems to Leuze electronic for repair, please provide an accurate description of the error.

12.3 Disassembling, packing, disposing

Repacking

For later reuse, the device is to be packed so that it is protected.

Notice!

Electrical scrap is a special waste product! Observe the locally applicable regulations regarding disposal of the product.

A

Accessories 87
Accessory deflector unit 88
Accessory M12 connector 88
Accessory mounting bracket 88
Accessory ready-made cables 89
Accessory terminating resistor 89
Accuracy 14
Activation for inputs 74
Activation for outputs 75
Activation output (dynamic output) 76
Air humidity 15
Alarm flag 68
Alarms 67
Alignment 20

C

Cleaning 92
Commissioning steps at a glance 12
Connections
  DeviceNet BUS IN 38
  DeviceNet BUS OUT 39
  PWR IN 38
  Service 39
Contrast 72
Control buttons 43
Control panel 40

D

Declaration of conformity 5
Definition of input/output 74
Deflector unit
  Maximum ranges 24
  With integrated mounting bracket 24
  Without mounting bracket 26
Deflector unit US 1 OMS
  Dimensioned drawing 26
Deflector unit US AMS 01
  Dimensioned drawing 25
Description of functions 6
Device type 63
DeviceNet address entry 56
DeviceNet installation 53
DeviceNet interface 52
Diagnostics 82
Dimensioned drawing of AMS 3xxi 16
Direction counting 65, 67
Direction of movement 70
Display 40

E

EDS file 13, 54, 57
  Detailed description 59
Electrical connection 37
  Safety notices 37
Error delay - position 77
Error delay - position status 77
Error delay - velocity 78
Error delay - velocity status 78
Error delay time - position 78
Error delay time - velocity 78
Expanded diagnostics 83
Expanded heating control 72
Explanation of symbols 5

F

Free resolution 70
Function assignment of the hardware outputs 76
Function assignment of the inputs 75

G

General causes of errors 83

H

Heated reflectors
  Dimensioned drawing 31
  Specifications 30

I
Illumination 72
Input assembly 72
Input function status 75
Installation 18
Interface errors 84
Interface info in display 41
Internal hardware error 41

L
Language selection 71
Laser diode laser control 71
Laser diode laser status 70
LSR status display 85

M
MAC ID 52, 56
Main menu
  Device information 45
  Language selection 45
  Network information 45
  Parameter 45
  Service 45
  Status- and measurement data 45
Maintenance 92
Measurement range 14
Measurement value output 14
Menus
  Language selection menu 49
  Main menu 44
  Parameter menu 46
  Service menu 49
Mounting 19
  with laser beam deflector unit 24
Mounting bracket(optional) 21
Mounting distances 22
Movement status 70

N
Name plates 18
Net LED 43

O
ODVA 52
Offset value 70
Operating principle 12
Operating temperature 15
Operating time 69
Operation 40, 49
Output assembly 73
Output function status 76
Overview of reflector types 88

P
Packaging 18
Parameter enabling 49, 51
Parameter menu
  DeviceNet 46
  I/O 47
  Maximum position value 46
  Other 48
  Parameter handling 46
Password 71
Password protection 71
Plausibility error 41
Position format 65
Position sensor type 65
Position value 59, 65
Position value + status 59
Position value in the case of error 77
Prefailure message 40
Preset reset 69
Preset status 69
Preset teach 69
Preset toggle 69
Preset value 69
Preset value + control 61
Product code 63
Product name 63
PWR LED 42

Q
Quality assurance 5

R
Received signal 41
Reflective tape
  Dimensioned drawing 29

Specifications 28
Reflector 27
Mounting 33
Pitch 36
Size 32
Type overview 32
Repair 92
Revision 63

S

Sensing distance 87
Serial number 63
Servicing 92
Specifications 14
Dimensioned drawing 16
General specifications 14
Reflective tapes 27
Status 63
Status- and warning messages 40
Status display 40
ATT 85
ERR 85
PLB 85
TMP 85
Status display in the display 85
Status displays 42
Status messages 82
Storage 18
Storage temperature 15
Supply voltage 14
Supply voltage Data V+ / Data V- 56
Supported alarm 67
Supported warnings 68
Surface reflections 34
Symbols 5

T

Temperature monitoring 40
Transport 18
Troubleshooting 82
Trunk Line 52
Type overview 17, 87

V

Velocity format 66
Velocity free resolution 66
Velocity in the case of failure 78
Velocity limit value
Direction selection 80
Enable 80
Limit value comparison 81
Limit value range end 81
Limit value range start 81
Limit value status 81
Switching mode 80
Velocity hysteresis 80
Velocity limit value 80
Velocity value 66
Velocity value + status 60
Vendor ID 63

W

Warning flag 68
Warnings 68

Level 1 ▲▼ : selection	Level 2 ▲▼ : selection ESC : back	Level 3 ▲▼ : selection ESC : back	Level 4 ▲▼ : selection ESC : back	Level 5 ▲▼ : selection ESC : back	Selection/configuration option ▲▼ : selection ↵ : activate ESC : back	Detailed information on
Device information						page 42
Network information						page 42
Status- and measurement data						page 42
Parameter ↵	Parameter handling	↵ Parameter enabling			ON / OFF	page 44
		↵ Password	↵ Activate password		ON / OFF	
			↵ Password entry		Configuration option of a four-digit numerical password	
		↵ Parameters to default			All parameters are reset to their factory settings	
↵	DeviceNet	↵ Activation			ON / OFF	page 44
		↵ Node ID				
		↵ Baud rate			125 kbit/s / 250 kbit/s / 500 kbit/s	
↵	Position value	↵ Measurement unit			Metric/inch	page 44
		↵ Count direction			Positive/negative	
		↵ Offset			Value input:	
		↵ Preset			Value input	
		↵ Error delay			ON / OFF	
		↵ Position value in the case of error			Last valid value / zero	
		↵ Free resolution value			5 …50000	
↵	I/O	↵ I/O 1	↵ Port configuration		Input/output	page 45
			↵ Switching input	↵ Function	No function/preset teach/laser ON/OFF	
				↵ Activation	Low active/high active	
			↵ Switching output	↵ Function	Pos. limit value 1 / Pos. limit value 2 / Velocity / Intensity (ATT) / Temp. (TMP) / Laser (LSR) / Plausibility (PLB) / Hardware (ERR)	
				↵ Activation	Low active/high active	
		↵ I/O 2	↵ Port configuration		Input/output	
			↵ Switching input	↵ Function	No function/preset teach/laser ON/OFF	
				↵ Activation	Low active/high active	
			↵ Switching output	↵ Function	Pos. limit value 1 / Pos. limit value 2 / Velocity / Intensity (ATT) / Temp. (TMP) / Laser (LSR) / Plausibility (PLB) / Hardware (ERR)	
				↵ Activation	Low active/high active	
		↵ Limit values	↵ Upper pos. limit 1	↵ Activation	ON / OFF	
				↵ Limit value input	Value input in mm or inch/100	
			↵ Lower pos. limit 1	↵ Activation	ON / OFF	
				↵ Limit value input	Value input in mm or inch/100	
			↵ Upper pos. limit 2	↵ Activation	ON / OFF	
				↵ Limit value input	Value input in mm or inch/100	
			↵ Lower pos. limit 2	↵ Activation	ON / OFF	
				↵ Limit value input	Value input in mm or inch/100	

		Other	Heating control			Standard/extended (10°C … 15°C/30°C … 35°C)	page 46
			Display background			10 minutes/ON	
			Display contrast			Weak/Medium/Strong	
			Service RS232	Baud rate		57.6 kbit/s / 115.2 kbit/s	
				Format		8,e,1 / 8,n,1	
Language selection						Deutsch / English / Español / Français / Italiano	page 47
Service		Status messages					page 47
		Diagnostics				Exclusively for service purposes by Leuze electronic	
		Expanded diagnostics				Exclusively for service purposes by Leuze electronic	