Leuze electronic

the sensor people

MC3x

Magnetically Coded Sensors with MSI-MC3x Safety Relays

EN 2012/10 - 700021
We reserve the right to
make technical changes

SAFE IMPLEMENTATION AND OPERATION

Original operating instructions

ПРОМЭЛЕКТРОНИКА / sales@prom-elec.com

© 2012
Leuze electronic GmbH + Co. KG
In der Braike 1
D-73277 Owen / Germany
Phone: +49 7021 573-0
Fax: +49 7021 573-199
http://www.leuze.com
info@leuze.de

1 About this document . . . 5
1.1 Other applicable documents . . . 5
1.2 Used symbols and signal words . . . 5
1.3 Checklists . . . 6

2 Safety . . . 7
2.1 Approved purpose and foreseeable improper operation . . . 7
2.1.1 Proper use . . . 8
2.1.2 Foreseeable misuse . . . 8
2.2 Competent persons . . . 9
2.3 Responsibility for safety . . . 9
2.4 Exemption of liability . . . 9

3 Device description . . . 11
3.1 Device overview . . . 12

4 Functions . . . 15
4.1 Start/restart interlock . . . 15
4.2 Automatic start/restart . . . 15
4.3 Contactor monitoring (EDM) . . . 15

5 Applications . . . 16

6 Mounting . . . 19
6.1 Selecting the position and arrangement of sensor and actuator . . . 19
6.2 Mounting and aligning sensor and actuator . . . 22
6.2.1 Checklist - correct mounting of sensor and actuator . . . 24
6.3 Mounting the Safety Relay . . . 25

7 Electrical connection . . . 26
7.1 Terminal assignments of the Safety Relay . . . 26
7.1.1 MSI-MC310 Safety Relay . . . 27
7.1.2 Sensor pin assignment (1NC/1NO) . . . 28
7.1.3 MSI-MC311 Safety Relay . . . 29
7.2 Sensor pin assignment (2NO) . . . 30
7.3 Connection examples . . . 31
7.3.1 Connection examples with MC3xS1x sensors and MSI-MC310 Safety Relay . . . 31
7.3.2 Connection examples with MC3xS2x sensors and MSI-MC311 Safety Relay . . . 33
7.4 Connecting to the machine control . . . 35
7.5 Switching on . . . 35
7.6 Reset . . . 35
7.7 Unlocking start/restart interlock . . . 36

8 Testing . . . 37
8.1 Before the initial start-up and following modifications . . . 37
8.1.1 Checklist – before the initial start-up . . . 38
8.2 To be performed periodically by competent persons . . . 39
8.3 To be performed daily by the operating personnel . . . 39
8.3.1 Check list – daily or at change of shift . . . 39

9 Cleaning . . . 41

10 Rectifying the fault 42
10.1 What to do in case of failure? 42
10.2 Rectifying the fault 42

11 Disposing 43

12 Service and support 44

13 Technical data 45
13.1 Magnetically Coded Sensors, actuator, contact set 1NC/1NO 45
13.2 Magnetically Coded Sensors, actuator, contact set 2NO 46
13.3 MSI-MC310 Safety Relay 47
13.4 MSI-MC311 Safety Relay 50

14 Dimensions and weights 53

15 Ordering information and accessories 56

16 EC Declaration of Conformity 58

1 About this document

1.1 Other applicable documents

The information on the MC3x Magnetically Coded Sensor is divided into two documents. Document “MC3x Application information” contains only the most important safety notices.

For safe implementation, testing and operation, you must download document “MC3x Magnetically Coded Sensors with MSI-MC3x Safety Relay, safe implementation and operation” from

- http://www.leuze.com/
  or request it from
- service.protect@leuze.de or
- Tel. +49 8141 5350-111

Table 1.1: Documents on the MC3x Magnetically Coded Sensors with Safety Relay

Purpose and target group	Title	Source
Detailed information for all users	MC3x Magnetically Coded Sensors with MSI-MC3x Safety Relay Safe implementation and operation	On the Internet, download from: http://www.leuze.com/
Basic information for technicians and operating company	MC3x Magnetically Coded Sensors with MSI-MC3x Safety Relay Application information	Print document part no. 70002 included in the delivery contents of the Magnetically Coded Sensor

1.2 Used symbols and signal words

Table 1.2: Warning symbols and signal words

⚠	Symbol indicating dangers to persons
NOTICE	Signal word for property damage Indicates dangers that may result in property damage if the measures for danger avoidance are not followed.
CAUTION	Signal word for minor injury Indicates dangers that may result in minor injury if the measures for danger avoidance are not followed.
WARNING	Signal word for serious injury Indicates dangers that may result in serious or fatal injury if the measures for danger avoidance are not followed.
DANGER	Signal word for life-threatening danger Indicates dangers with which serious or fatal injury is imminent if the measures for danger avoidance are not followed.

Table 1.3: Other symbols

○ I	Symbol for tips Text passages with this symbol provide you with further information.
↳	Symbols for action steps Text passages with this symbol instruct you to perform actions.

Table 1.4: Terms and abbreviations

EDM	**E**xternal **D**evice **M**onitoring
OSSD	**O**utput **S**ignal **S**witching **D**evice
RES	Start/**RES**tart interlock
PDF-M	Magnetically Coded Sensors (**P**roximity **D**evices with defined behavior under **F**ault conditions) with automatic monitoring (Self-**M**onitoring)
PDF-S	Magnetically Coded Sensors (**P**roximity **D**evices with defined behavior under **F**ault conditions) with **S**ingle fault tolerance
PFH_d	Probability of a dangerous Failure per Hour **P**robability of dangerous **F**ailure per **H**our
MTTF	Mean time to a dangerous failure **M**ean **T**ime **T**o **F**ailure
PL	**P**erformance **L**evel
2NO	Two contacts in "open" state without the presence of an actuator
xxx	Placeholder for version

1.3 Checklists

The checklists (see chapter 8 „Testing“) serve as a reference for the machine manufacturer or supplier. They replace neither testing of the complete machine or system prior to the initial start-up nor their periodic testing by a competent person. The checklists contain minimum testing requirements. Depending on the application, other tests may be necessary.

2 Safety

Before using the MC3x Series, a risk evaluation must be performed according to valid standards (e.g. EN ISO 12100-1, EN ISO 13849-1, EN ISO 14121). The result of the risk assessment determines the required safety level of the Safety Relay, sensor and actuator.

The realizable category of integration in control circuits acc. to EN ISO 13849-1 is dependent on the used contact block, wiring and evaluation.

For mounting, operation and testing, document “MC3x Magnetically Coded Sensors with MSI-MC3x Safety Relay”, the application information as well as all relevant national and international standards, regulations, rules and directives must be observed. Relevant and supplied documents must be observed, printed and handed to the affected personnel.

↳ Before working with Safety Relay, sensor and actuator completely read and understand the documents applicable to your task.

In particular, the following national and international legal regulations apply for the start-up, technical inspections and work with safety components:

- Machinery directive 2006/42/EC
- Electromagnetic compatibility directive 2004/108/EC
- EN 1088, Interlocking devices associated with guards
- EN 60204-1, Electrical equipment of machines
- EN 60947-5-3, Requirements for proximity switches
- Use of Work Equipment Directive 89/655/EEC supplemented by Directive 95/63 EC
- OSHA 1910 Subpart 0
- Safety regulations
- Accident-prevention regulations and safety rules
- Ordinance on Industrial Safety and Health and Labor Protection Act
- Device Safety Act

For safety-related information you may also contact the local authorities (e.g., industrial inspectorate, employer's liability insurance association, labor inspectorate, occupational safety and health authority).

2.1 Approved purpose and foreseeable improper operation

WARNING

A running machine can cause severe injuries!

↳ Make certain that, during all conversions, maintenance work and inspections, the system is securely shut down and protected against being restarted.

2.1.1 Proper use

- Safety Relay, sensor and actuator are intended for use in protective door monitoring in accordance with EN 1088 and EN 60947-5-3.
- They are used for the safety-related monitoring of moveable guards and, thus, for the protection of persons at entry or access areas of points of operation on machines and systems (e.g., protective door, sliding gate, protective hoods).
- Safety Relay, sensor and actuator must only be used after they have been selected in accordance with the respectively applicable instructions and relevant rules, standards and regulations regarding labor protection and safety at work, and after they have been mounted on the machine, connected, commissioned, and checked by a competent person.
- When selecting the Safety Relay, sensor and actuator, it must be ensured that their safety-related capability meets or exceeds the required Performance Level ascertained in the risk assessment. For the table of safety-related characteristic parameters, see chapter 13 „Technical data“.
- The MC3x sensors may only be operated with the approved MC3x actuators and MSI-MC3x Safety Relays. Proper function with respect to safety can be ensured only if compatible components are used.
- Safety Relay, sensor and actuator must be in perfect condition and periodically inspected by competent persons.
- If the point of operation can be reached within the stopping time of the dangerous process, a Safety Locking Device must be used instead of the Magnetically Coded Sensor.
- The guard must be dimensioned and mounted in such a way that reaching or stepping around is not possible.
- MC3x only reports persons upon opening of the guard, not whether persons are located in the danger zone. For this reason, a start/restart interlock in the safety chain is essential for access safeguarding.
- Sensor and actuator must be connected to the fixed or moveable guard in a permanent and tamperproof manner. The mounting conditions must be observed (see chapter 6 „Mounting“).
- The sensors and their actuators are to be protected against strong physical shocks and vibrations. Observe the permissible environmental conditions for storage and operation (see chapter 13 „Technical data“).
- Sensor and actuator must be protected against foreign bodies (e.g., iron filings and blasting agents).
- The normally closed contacts of the MSI-MC310 are used to signal the state. Use as safety-related contacts is not permitted.
- Sensor and actuator must be connected in such a way that a dangerous process can only be activated while the guard is closed and so that a stop command that ends the dangerous process is triggered upon opening of the guard.
- Cable gland, insulation materials and connecting wires of the appropriate protection rating are to be used.
- Safety Relay, sensor and actuator must be replaced after a maximum of 20 years (see chapter 13 „Technical data“). Repairs or the exchange of parts subject to wear and tear do not extend the service life.
- Damaged components must be replaced immediately.
- Sensor or actuator must neither be tampered with nor may their correct position be changed.
- External magnets must not be used nor may the contacts be bridged.
- No structural changes may be made to Safety Relay, sensor or actuator. When manipulating, the protective function is no longer guaranteed. In addition, all guarantee claims against the manufacturer shall no longer apply.

2.1.2 Foreseeable misuse

Any use other than that defined under the “approved purpose” or which goes beyond that use of the Safety Relay, sensor and actuator is considered improper use!

Safety Relay, sensor and actuator must **not** be used under the following conditions, .e.g.:

- The safety of multiple persons is dependent on the function of Safety Relay, sensor and actuator (e.g. nuclear power plants, trains, aircraft, motor vehicles, incinerators, medical devices)
- Where subjected to strong physical shocks or in potentially explosive or easily flammable atmospheres
- Danger posed by ejected objects or the spraying of hot or hazardous liquids from within the danger zone
- Presence detection of persons in danger zones
- Looping into the safety circuit parts that are not relevant to safety
- The combination of non-approved parts with Safety Relay, sensor or actuator
- Combination with non-compatible controls (current limiting, logic)
- Mounting positions that enable reaching or stepping around
- Using the sensor or actuator as limit stop
- Insufficiently stable mounting locations or unsecured mounting of sensor or actuator
- Mounting on ferromagnetic materials.

2.2 Competent persons

Prerequisites for competent persons:

- They have a suitable technical education.
- They know the rules and regulations for occupational safety, safety at work and safety technology and can assess the safety of the machine.
- They know the instructions for the safety components and the machine.
- They have been instructed by the responsible person on the mounting and operation of the machine, the Safety Relay and the sensor with actuator.

2.3 Responsibility for safety

Manufacturer and operating company must ensure that the machine and Safety Relay, sensor and actuator used function properly and that all affected persons are adequately informed and trained.
The type and content of all imparted information must not lead to unsafe actions by users.

The manufacturer of the machine is responsible for:

- safe machine construction
- safe implementation of Safety Relay, sensor and actuator
- imparting all relevant information to the operating company
- adhering to all regulations and directives for the safe starting-up of the machine

The operating company is responsible for:

- instructing the operator
- maintaining the safe operation of the machine
- adhering to all regulations and directives for occupational safety and safety at work
- regular testing by competent persons

2.4 Exemption of liability

Leuze electronic GmbH & Co. KG is not liable in the following cases:

- Safety Relay, sensor and actuator are not used as intended
- Reasonably foreseeable misuse is not taken into account
- Safety notices are not adhered to
- Mounting and electrical connection are not properly performed
- Proper function is not tested (see chapter 8 „Testing“).
- Combination of sensor and actuator with controls,
  - which have not been designed to be safety-oriented

- for which the current limits are not compatible
- which have not been programmed to be compatible with the respective contact set
- although a PDF system certified in accordance with EN 60947-5-3 was provided

3 Device description

The sensor system consists of the MC3x sensor, the MC3xA actuator and the corresponding MSI-MC3x Safety Relay.

The sensor contains a special combination of reed contacts that are contactlessly activated by the coded magnetic field of the actuator. For guards that are accessible from behind, a reset button (RES) can be connected to the MSI-MC3x for manual starting. Evaluation of the RES signal is monitored edge-dependent.

If, for example, a door is opened, the actuator mounted here is separated from the sensor, which is located on the stationary part of the guard. If the change in the position of the actuator reaches the maximum value of the defined distance, the switching state is detected by the Safety Relay connected to the sensor and is signaled to the control via two fail-safe OSSD contacts.

As a result, risky machine movements can only be executed while the guard is closed or if a stop command is executed while the guard is being opened.

Moreover, additional switching elements can be integrated in the safety circuit. The monitoring of relays or contactors is possible via their feedback contacts K3, K4 in the start circuit of the MSI-MC3x.

Due to the closed design of the sensors, they can also be used in critical environmental conditions (e.g., in areas where there is exposure to dust).

The system offers a high degree of safety and satisfies the following standards:

- Performance Level (PL) e (EN ISO 13849-1: 2008)
- Safety category 4 (EN ISO 13849-1:2008)

Depending on the application, various MC3x series are available.

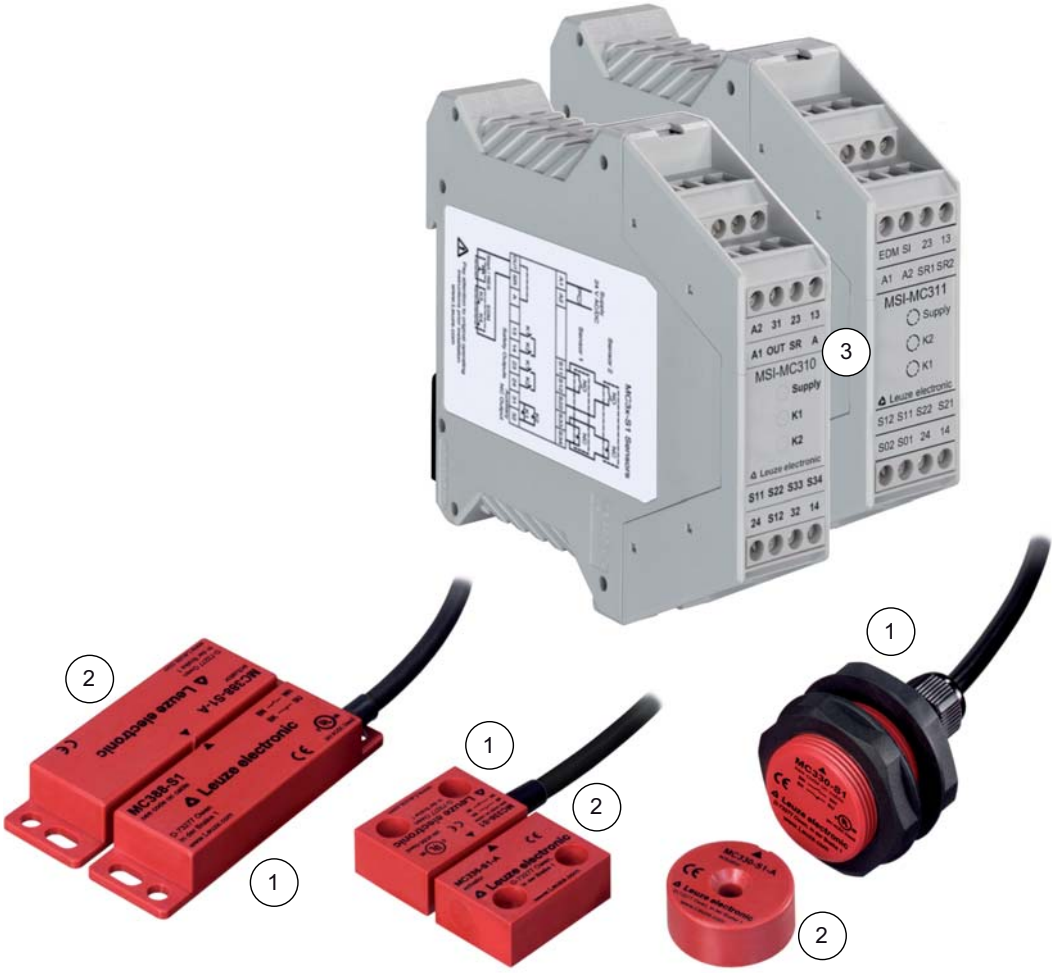

1 Sensor
2 Actuator
3 Safety Relay

Figure 3.1: MC3x series with MSI-MC3x

ПРОМЭЛЕКТРОНИКА / sales@prom-elec.com

3.1 Device overview

Table 3.1: Overview of the product variants of the MC3x series with contact set 1NC/1NO

Sensor	Housing	Switching distance Sao /OFF/ Sar	Connection
MC388-S1x	Cuboid max. 88 mm x 25 mm	< 6 mm, > 13 mm, > 30 mm	2 m-, 5 m-, 10 m-PVC connection cable with wire-end sleeves
			2 m, 5 m, 10 m PUR connection cable with wire-end sleeves
			0.2 m PVC connection cable with M12 plug
			M8 plug
MC336-S1x	Cuboid max. 36 mm x 26 mm	< 3 mm, > 8 mm, > 11 mm	2 m-, 5 m-, 10 m-PVC connection cable with wire-end sleeves
			2 m, 5 m, 10 m PUR connection cable with wire-end sleeves
			0.2 m PVC connection cable with M12 plug
			M8 plug
MC330-S1x	Cylinder max. 30 mm, round	< 6 mm, > 12 mm, > 14 mm	2 m-, 5 m-, 10 m-PVC connection cable with wire-end sleeves
			2 m, 5 m, 10 m PUR connection cable with wire-end sleeves
			0.2 m PVC connection cable with M12 plug
			M8 plug

Table 3.2: Overview of the product variants of the MC3x series with contact set 2NO

Sensor	Housing	Switching distance Sao /OFF/ Sar	Connection
MC388-S2x	Cuboid max. 88 mm x 25 mm	< 9 mm, > 19 mm, > 22 mm	2 m-, 5 m-, 10 m-PVC connection cable with wire-end sleeves
			0.2 m PVC connection cable with M12 plug
			M8 plug

Sensor	Housing	Switching distance Sao /OFF/ Sar	Connection
MC336-S2x	Cuboid max. 36 mm x 26 mm	< 7 mm, > 17 mm, > 20 mm	2 m-, 5 m-, 10 m-PVC connection cable with wire-end sleeves
			0.2 m PVC connection cable with M12 plug
			M8 plug
MC330-S2x	Cylinder max. 30 mm, round	< 6 mm, > 15 mm, > 18 mm	2 m-, 5 m-, 10 m-PVC connection cable with wire-end sleeves
			0.2 m PVC connection cable with M12 plug
			M8 plug

Table 3.3: Overview of MSI-MC3x Safety Relays

Safety Relays	Functions	Output contacts	Safety
MSI-MC310	Evaluation of MC3xS1x sensors (1NC/1NO), RES, EDM	Safety-related relay contacts 2 normal open contacts (N/O) / non-safety-related relay contact 1 normal closed contact (N/C)	Up to PL e and cat. 4 (EN 13849-1) with connection of one sensor Up to PL e and cat. 3 (EN 13849-1) with connection of more than one sensor
MSI-MC311	Evaluation of MC3xS2x sensors (2NO), RES, EDM	Safety-related relay contacts 2 normal open contacts (N/O)	Up to PL e and cat. 4 (EN 13849-1) with connection of one sensor Up to PL e and cat. 3 (EN 13849-1) with connection of more than one sensor

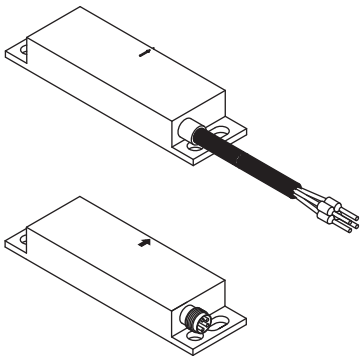

Figure 3.2: Design MC388x

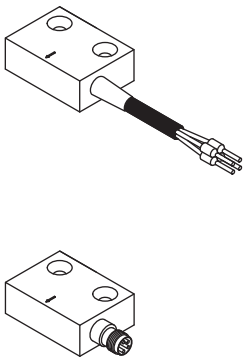

Figure 3.3: Design MC336x

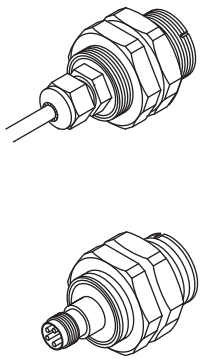

Figure 3.4: Design MC330x

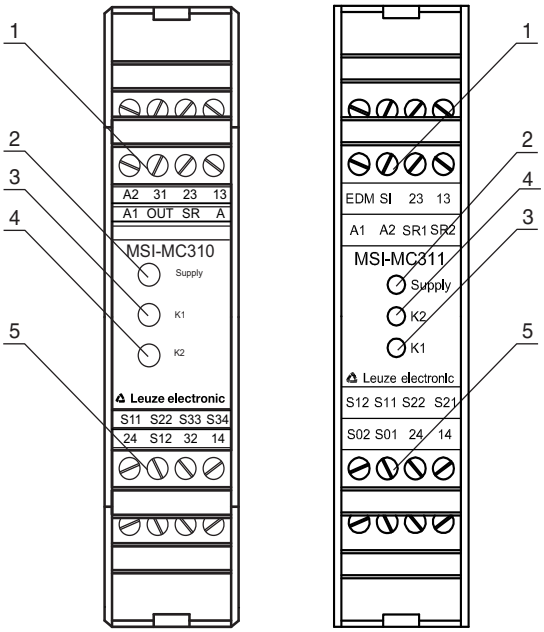

1 Connection terminals
2 Voltage indicator
3 Status K1
4 Status K2
5 Connection terminals

Figure 3.5: MSI-MC310 and MSI-MC311 Safety Relays

LED	State	Meaning
Supply	Green illuminated	Voltage supply switched on
K1	Green illuminated	Input condition for K1 fulfilled
K2	Green illuminated	Input condition for K2 fulfilled

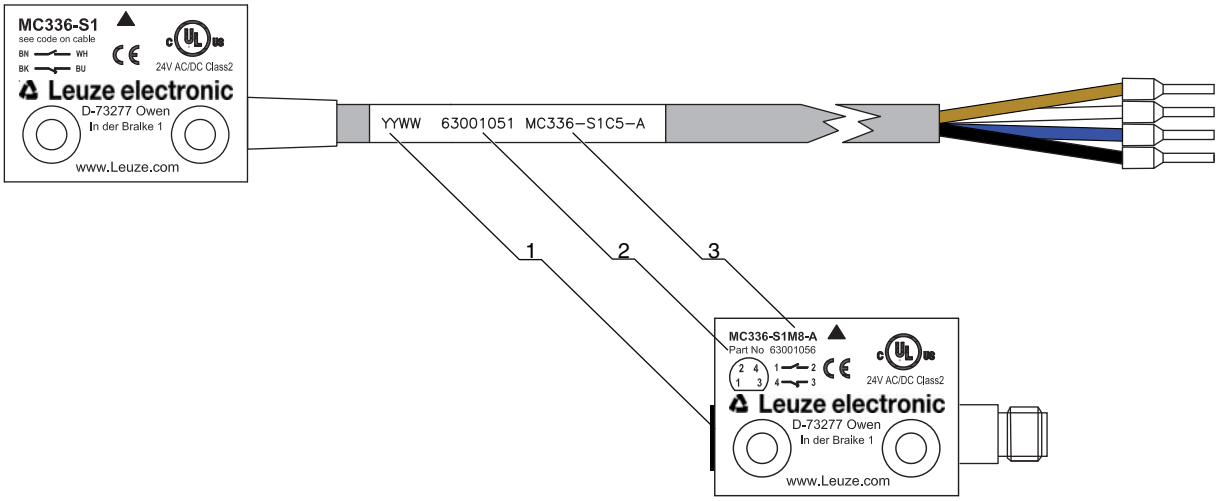

1 Date of manufacture
2 Order number
3 Designation

Figure 3.6: Designation locations, MC3x series sensors

4 Functions

Table 4.1: Overview of the safety functions

Short description of the functions	
Stop function	Safety-related; initiated by the guard
Start/restart interlock	Prevents automatic restart; forces manual confirmation via a reset button (RES)
Automatic start/restart	Automatic operation without use of a reset button
RES (restart)	Manual start by means of a reset button for guards that are accessible from behind
EDM	External Device Monitoring (contactor monitoring)
Display technology	LEDs, display for K1, K2 input condition as well as for voltage supply
OSSDs	Safety-related switching outputs (relays)

4.1 Start/restart interlock

(Connection of the reset button between pin OUT / 24 V and pin SR of the MSI-MC310)

(Connection of the reset button between pin A2 and pin SR1 / SR2 of the MSI-MC311)

The start/restart interlock prevents automatic release of the safety circuits and automatic start-up of the system (e.g., if the protective door closes again or an interruption of the voltage supply is restored).

The system may not be manually released with the reset button until no persons are located in the danger zone (see chapter 7.7 „Unlocking start/restart interlock“).

4.2 Automatic start/restart

(Bridge between pin OUT / 24 V and pin A of the MSI-MC310)

(Bridge between pin SR1 / SR2 and pin EDM of the MSI-MC311)

The automatic start/restart interlock enables immediate release of the safety circuits and automatic start-up of the system (e.g., if the protective door closes again or an interruption of the voltage supply is restored).

This operating mode is only permitted if it is not possible to reach or step behind the guard (see chapter 7.7 „Unlocking start/restart interlock“).

4.3 Contactor monitoring (EDM)

(Connection in the start circuit between pin OUT and pin SR of the MSI-MC310)

(Connection in the start circuit between pin S12 and PIN EDM of the MSI-MC311)

The MSI-MC310 / MSI-MC311 monitors the feedback circuits of the connected relays or contactors.

The two OSSDs are not activated until:

- all actuators of the connected sensors are in the specified distance range
- all connected sensors are activated
- opening of the contacts (reset button, EDM contacts) causes the signal at pin SR to drop out

5 Applications

The MC3x series is used in position monitoring of moveable guards, e.g. (sliding) gates, flaps or hoods.

WARNING

Unexpected machine start-up may cause severe injuries.

If the guard is accessible from behind, e.g., in the case of access guarding of danger zones, only the opening of the door is detected; persons present within the danger zone are not detected after the door is closed.

↳ Only operate access guarding in the start/restart interlock operating mode or take additional safety measures.

Figure 5.1: Access guarding on a PCB production line, implemented on a door with MC330x sensors

Figure 5.2: Access guarding on a filling system, realized on a door with MC388x sensors

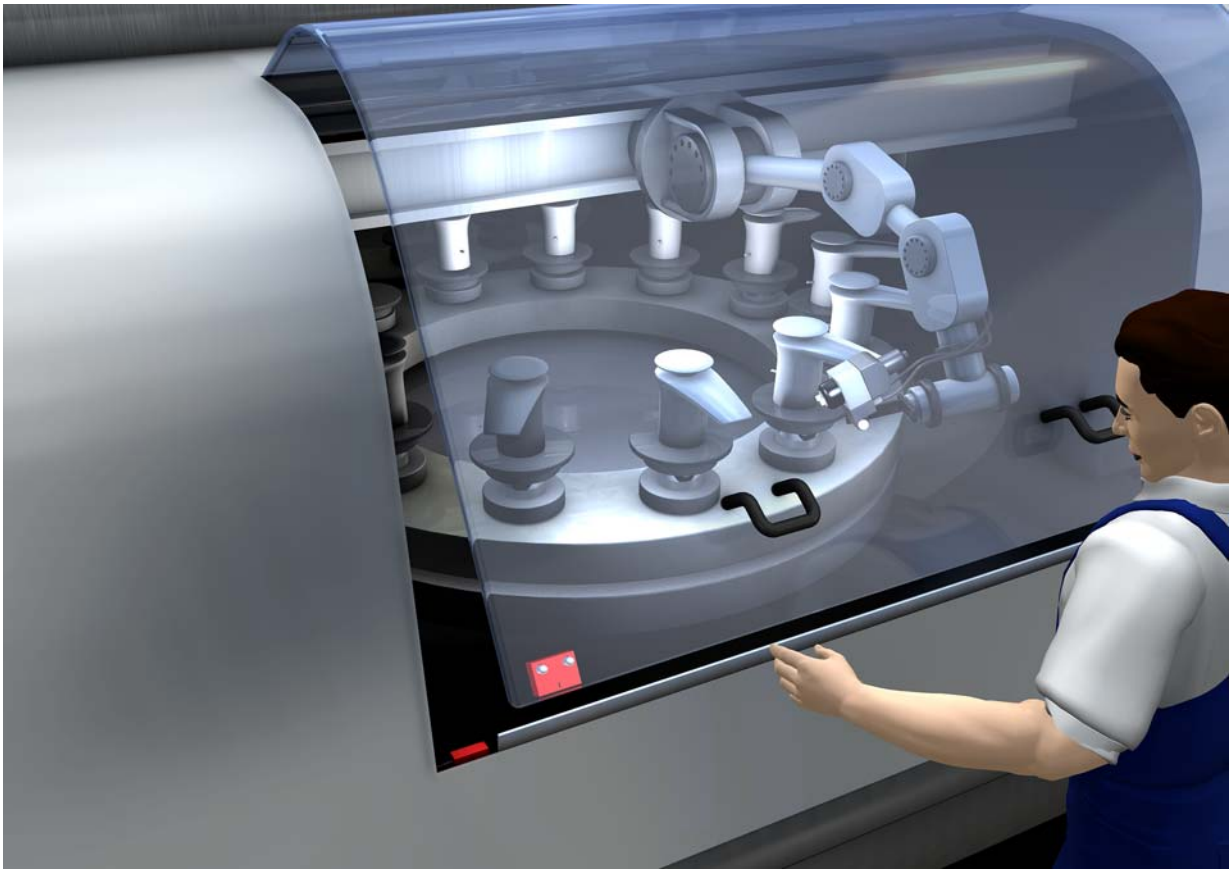

Figure 5.3: Access safeguarding on a small painting robot, implemented on a hood with MC336x sensors

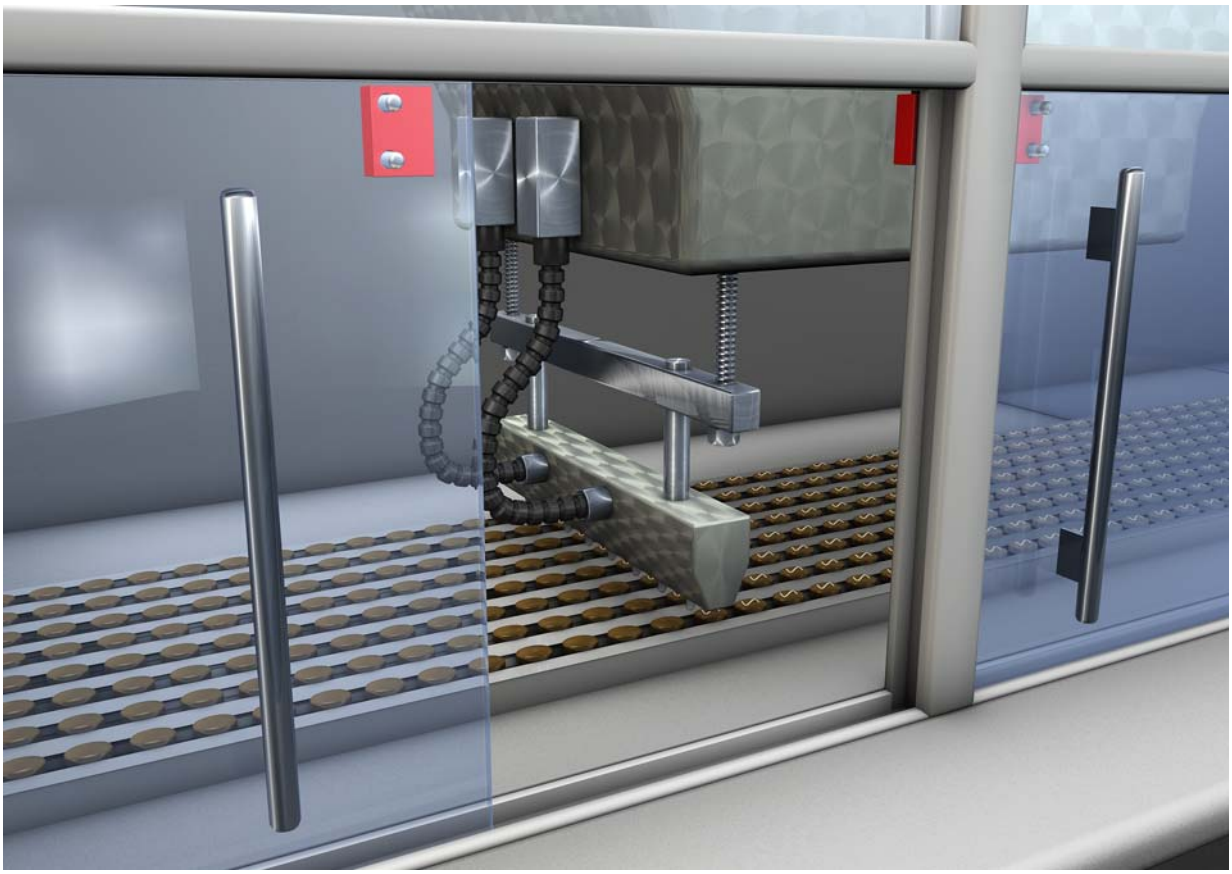

Figure 5.4: Access safeguarding on a food production line, implemented on a sliding gate with MC336x sensors

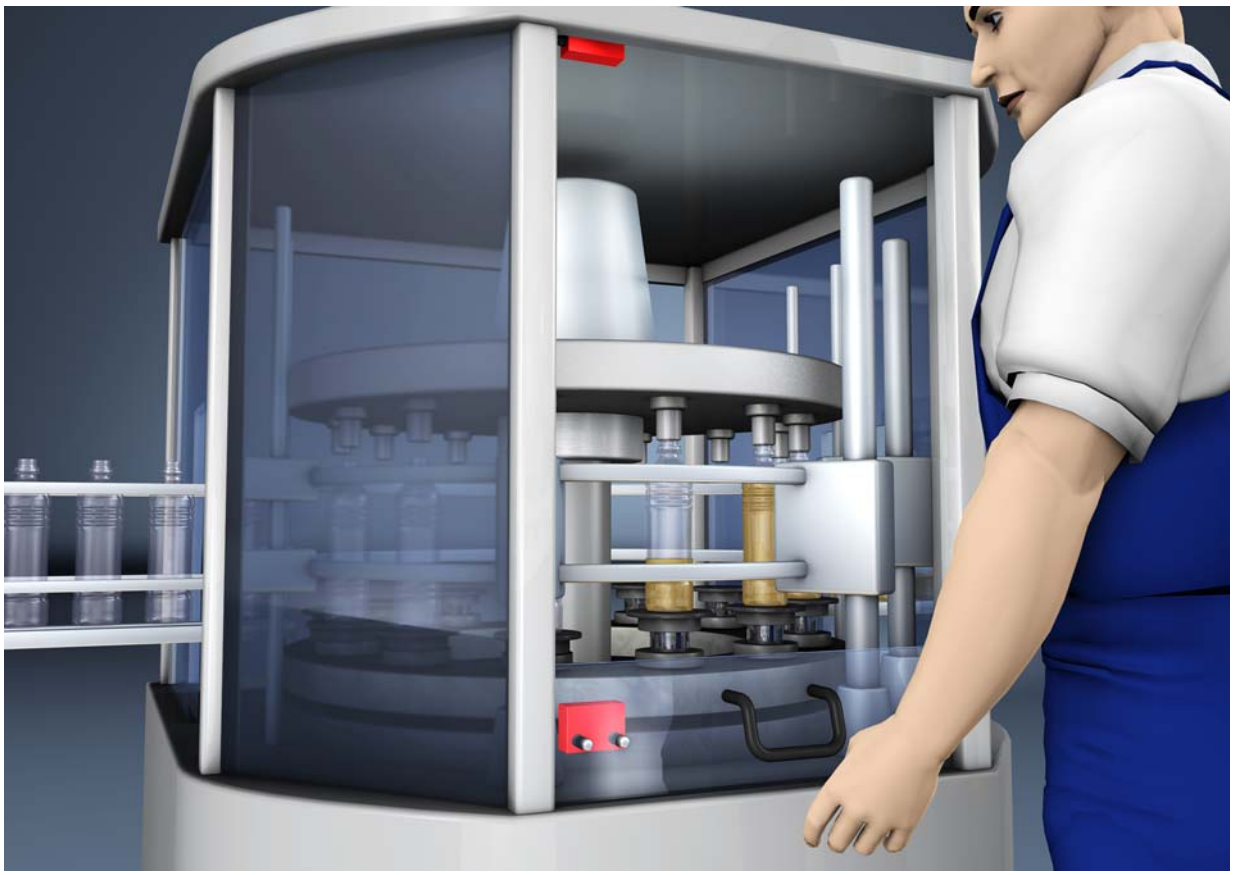

Figure 5.5: Access safeguarding on a beverage filling system, implemented on a raisable window with MC336x sensors

6 Mounting

⚠ WARNING

Improper mounting may result in serious injury!

The protective function of the sensors is only ensured if used in the intended area of application and if they are mounted professionally.

- Mounting may only be performed by competent persons.
- Observe the relevant standards, regulations and these instructions.
- Do not use the sensor in areas under the influence of strong magnetic fields.
- After mounting, check the sensors for proper function

6.1 Selecting the position and arrangement of sensor and actuator

⚠ WARNING

Improper mounting may result in serious injury!

The protective function of the sensors is only ensured if, after the guard is opened, the dangerous process can be safely stopped before it is reached by a person.

- Mount the sensors with an adequate safety distance to the danger zone.
- Take all delay times into account (e.g., the response times of the control elements, the stopping time of the machine)

Select the mounting locations so that the following conditions are satisfied acc. to EN 1088:

- For doors/flaps that swing open, the position of sensor and actuator is opposite the hinge side.
- The position of sensor and actuator allows the cut-out distance Sar to be reached upon opening of the moveable guard.
- The position of sensor and actuator makes it impossible to reach or step behind the moveable guard.
- Make certain that the gap dimension between the fixed and moveable part of the guard is not wide enough for reaching or stepping behind.
- The position of sensor and actuator makes it impossible for a person to reach the dangerous area during the stopping time of the machine after the guard is opened.
- The position protects the sensor from physical shocks and vibrations that exceed specifications (see chapter 13 „Technical data“).
- Adjacent Magnetically Coded Sensors must be separated by at least 50 mm.
- The position of sensor and actuator must not lie within the range of influence of blasting agents or magnetic particles.
- Mounting on ferromagnetic materials (e.g., iron, nickel, cobalt) is to be avoided.
- When mounting on stainless steel surfaces, spacers are to be used and the safety-related switching distances are to be inspected.
- The position of sensor and actuator must facilitate form-fitting mounting.
- Accessible to qualified personnel for testing and replacement
- Cannot be manipulated by operators though removal, turning, short-circuiting (e.g., by means of covered mounting)

NOTICE

Faulty or incorrect alignment will result in an operating fault.

- The alignment of sensor and actuator within the scope of start-up is to be performed only by trained personnel.
- Observe the data sheets and mounting instructions of the individual components.

Aligning on the basis of the markings, approach directions

In the following example, the MC388x sensor is mounted on the front of a sliding gate. The switching condition is activated by the actuator approaching from below.

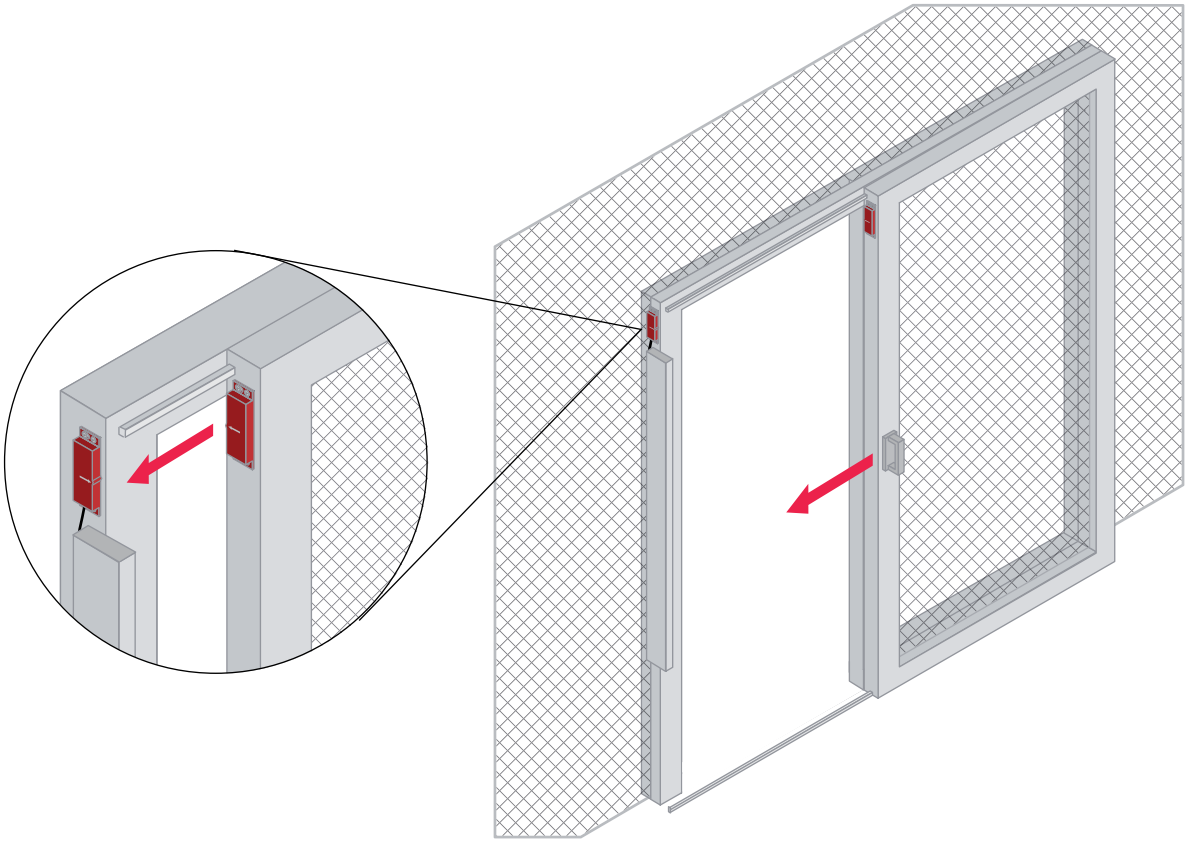

Figure 6.1: Approach direction from below

In the following example, the MC388x sensor is mounted on the front of a swinging door and is protected. The switching condition is activated by the actuator approaching on the same level.

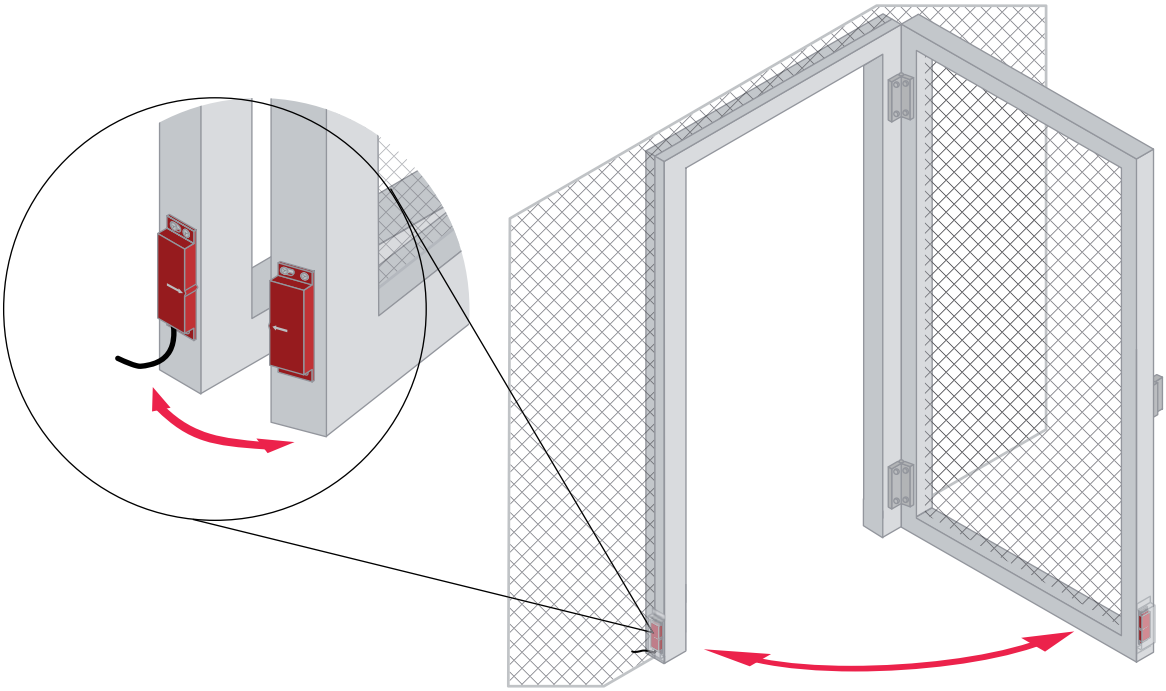

Figure 6.2: Approach direction on the same level

In the following example, the MC336x sensor is mounted on a small sliding window and is protected. The switching condition is activated by the actuator approaching on the same level.

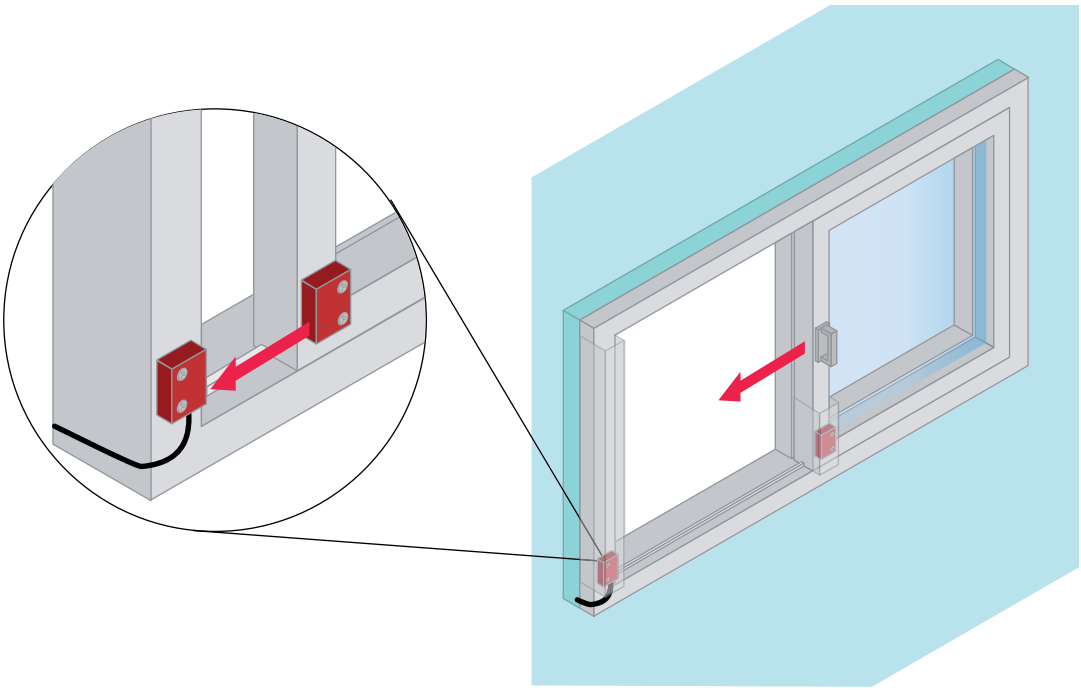

Figure 6.3: Approach direction on the same level

In the following example, the MC336x sensor is mounted on a vertically moving sliding window and is protected. The switching condition is activated by the actuator approaching from the side.

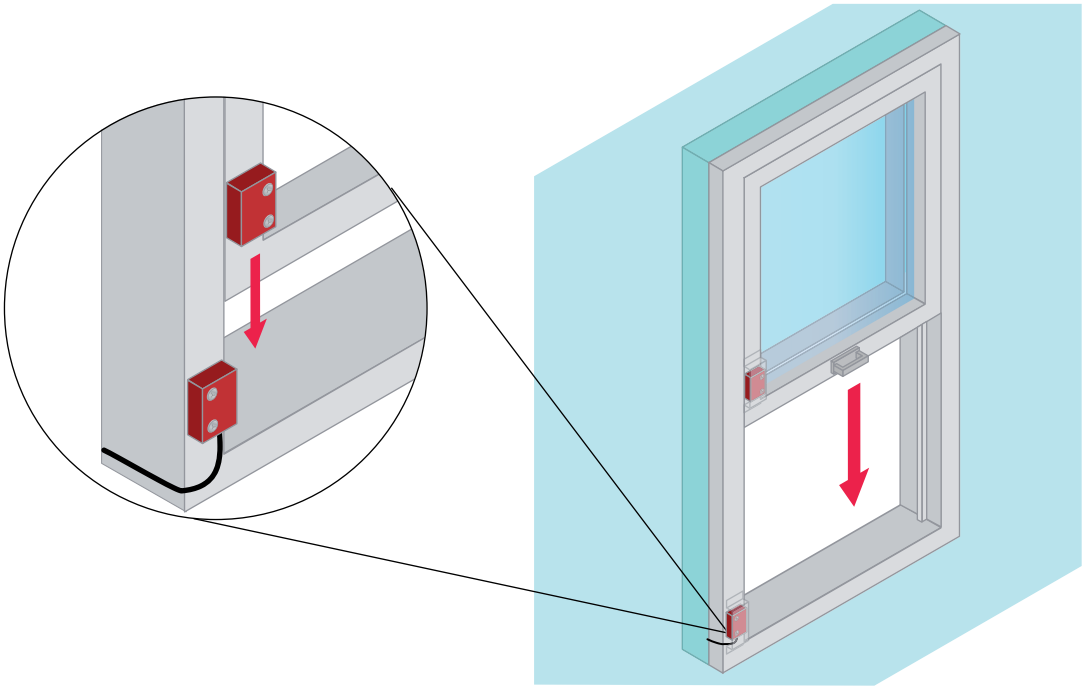

Figure 6.4: Approach direction, from side

In the following example, the MC330x sensor is mounted recessed on the front of a sliding gate. The switching condition is activated by the actuator approaching on the same level.

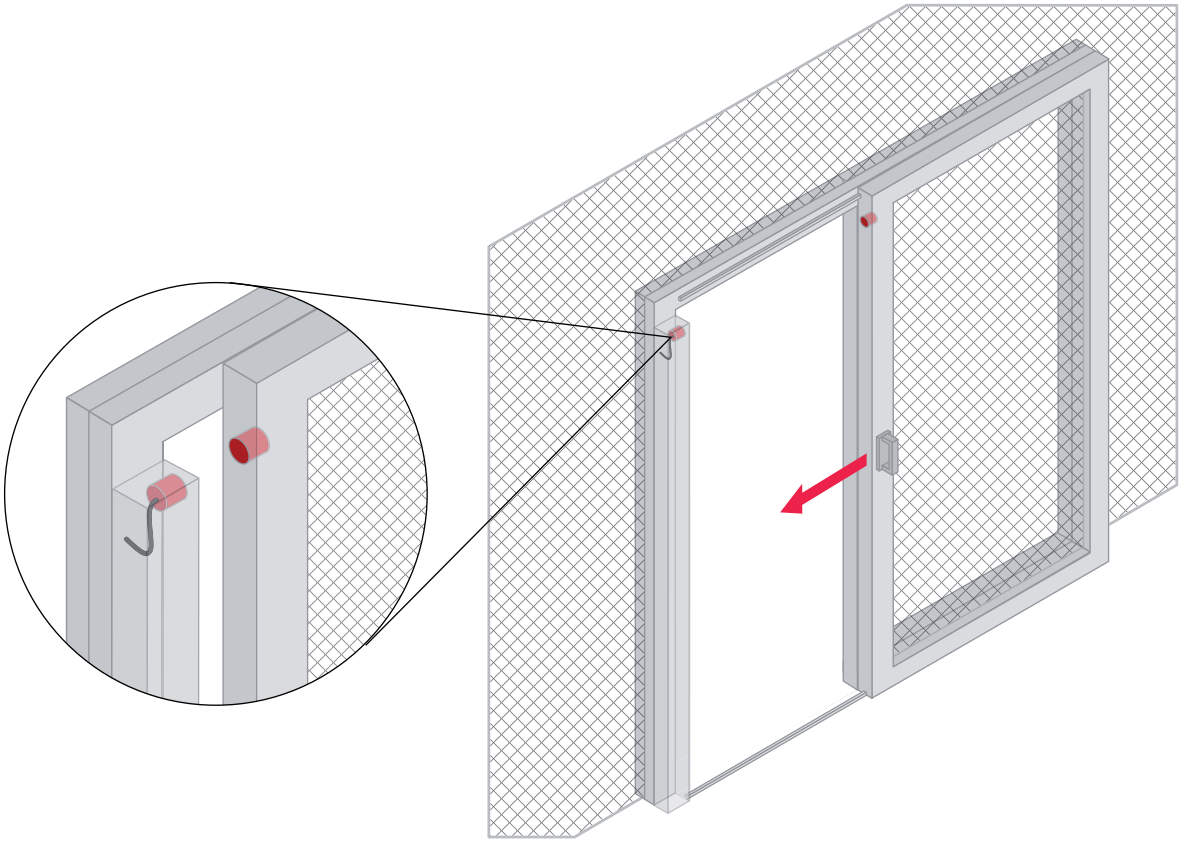

Figure 6.5: Approach direction on the same level

6.2 Mounting and aligning sensor and actuator

NOTICE
Observe the switching distances and ensure that the markings on sensor and actuator line up while the guard is closed.

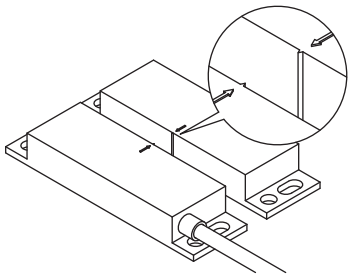

Figure 6.6: MC388x

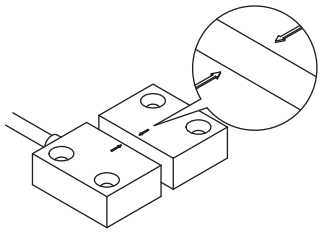

Figure 6.7: MC336x

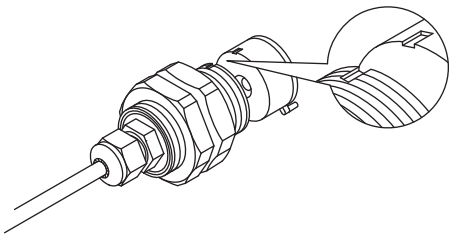

Figure 6.8: MC330x

Proceed as follows:

- Select the position of the sensor on the fixed part of the guard (see chapter 6.1 „Selecting the position and arrangement of sensor and actuator“).
- Select the position of the actuator on the moveable part of the guard (see chapter 6.1 „Selecting the position and arrangement of sensor and actuator“).
- Drill the bore holes acc. to the specified dimensions (see chapter 14 „Dimensions and weights“).
- For round actuators, take into account the anti-twist protection by providing an appropriate recess.
- Loosely screw the sensor and actuator at the defined positions. Use the washers.
- Align sensor and actuator with one another so that when the guard is closed, the markings (e.g., arrows, notches, lines) are aligned, i.e., are opposite one another. A lateral offset reduces the switching distance.

- Align sensor and actuator with one another so that while the guard is closed, they do not touch one another (minimum distance: 1 mm).
- Do not consider sensor and actuator to be limit stops.
- Make certain that the cut-in and cut-out points (Sao, OFF, Sar see table 6.1) can be reached without mechanical tension in the moveable guard.
- Secure sensor and actuator within the specified distance values "Sao" and "OFF".
- After aligning, permanently fasten sensor and actuator with locking screws (to 10 Nm).

Correct alignment

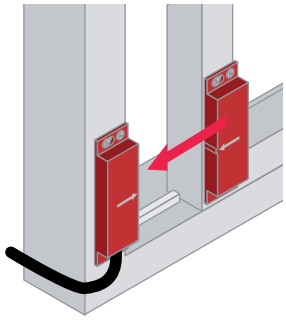

Figure 6.9: The markings are aligned on the same level.

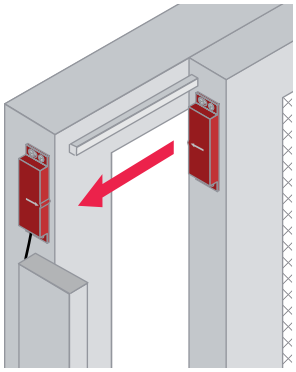

Figure 6.10: The markings are aligned from below.

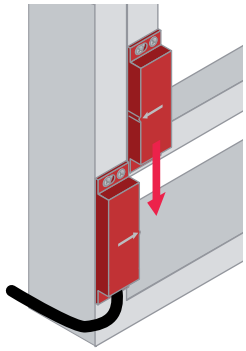

Figure 6.11: The markings are laterally aligned.

Incorrect alignment

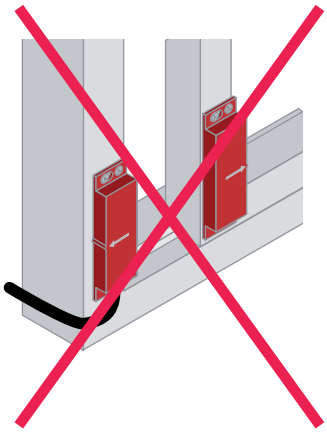

Figure 6.12: The markings are not aligned with one another.

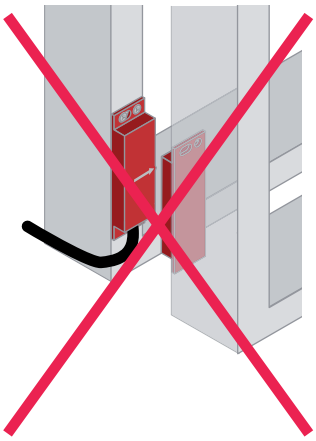

Figure 6.13: The markings are not aligned.

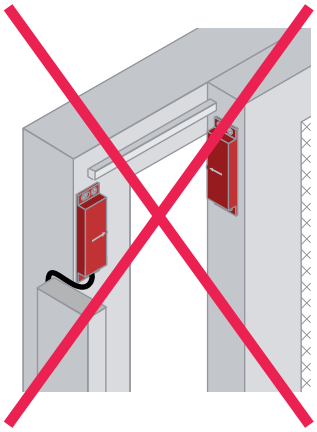

Figure 6.14: The markings are not aligned.

Switching distances from sensor to actuator

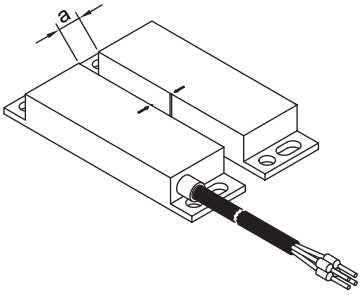

a see table switching distance

Figure 6.15: MC388x

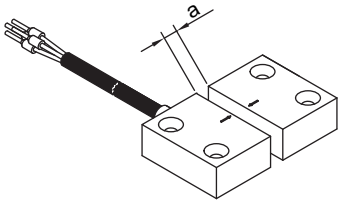

a see table switching distance

Figure 6.16: MC336x

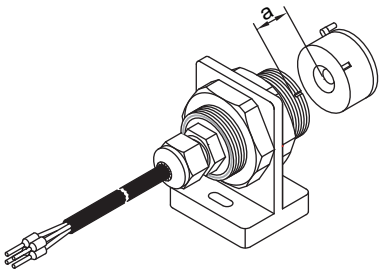

a see table switching distance

Figure 6.17: MC330x

Table 6.1: Switching distances of sensor and actuator

Sensor type	Housing	Switching distance Sao / OFF / Sar
MC388-S1-A	Cuboid 88 mm x 25 mm	< 6 mm, > 13 mm, > 30 mm
MC336-S1-A	Cuboid 36 mm x 26 mm	< 3 mm, > 8 mm, > 11 mm
MC330-S1-A	Cylinder 30 mm, round	< 6 mm, > 12 mm, > 14 mm
MC388-S2-A	Cuboid 88 mm x 25 mm	< 9 mm, > 19 mm, > 22 mm
MC336-S2-A	Cuboid 36 mm x 26 mm	< 7 mm, > 17 mm, > 20 mm
MC330-S2-A	Cylinder 30 mm, round	< 6 mm, > 15 mm, > 18 mm
Sao = assured cut-in distance OFF = cut-out point Sar = assured cut-out distance		

Proceed as follows:

- Align the actuator so that the distance between sensor and actuator is within the specifications (Sao and OFF) while the guard is closed.
- The fitting position of sensor and actuator can be freely selected.
- If necessary, provide a constraining guide for the moveable part of the guard. The edges of the moveable and fixed part of the guard must be aligned (e.g., door and frame).
- Do not use the sensor as a limit stop, but rather provide a separate mechanical limit stop.
- Install a locking or snap mechanism for the moveable part of the guard to prevent it from swinging open.
- If it is expected that the moveable part of the guard will warp, the mounting position of sensor and actuator can be adjusted to offset this somewhat if necessary. Check the resulting gap dimensions to determine, e.g., whether it allows a person to reach behind.
- Fasten sensor and actuator with rivets or tamperproof screws on a form-fitting surface so that they cannot be detached.
- If necessary, mount sensor and actuator so they are covered.
- Note the minimum approach speed (see chapter 13 „Technical data“).

6.2.1 Checklist - correct mounting of sensor and actuator

Area of application: Mounting

Tester: Technician who mounts the MC3x

Checklist for mounting	Yes	No
Are sensor, actuator and Safety Relay properly selected, i.e., not mixed, and used acc. to the assignment (see chapter 15 „Ordering information and accessories“)?		
Are sensor and actuator mounted in a form-fitting manner?		
While the guard is closed, is the distance from sensor and actuator within the specified values Sao and OFF?		
Do the markings on sensor and actuator align while the guard is closed?		

Checklist for mounting	Yes	No
Is it ensured that sensor and actuator do not serve as a limit stop?		
Are sensor and actuator fastened in such a way that they cannot be moved and turned?		
Is a separate limit stop with locking or snap mechanism mounted?		
Is the distance to other Magnetically Coded Sensors and their actuators maintained?		
Are sensor and actuator accessible for inspection and replacement?		
Is access to the point of operation/to the danger zone possible only through the monitored, moveable part of the guard?		
Can the point of operation be reached only after the dangerous movement has stopped?		
Have measures been taken to prevent the guard from being bypassed by crawling under or reaching or jumping over?		
Is it impossible to actuate the start/restart button from within the danger zone?		
Can the entire danger zone be seen from the installation site of the start/restart button?		
Are the edges of the moveable and fixed part of the guard aligned (e.g., door and frame); no warping or deformation?		

6.3 Mounting the Safety Relay

⚠ WARNING

Improper mounting may result in serious injury!

The protective function of the Safety Relay is only ensured if appropriately and professionally mounted for the respective, intended area of application.

↳ Only allow competent persons to install the Safety Relay.

↳ Observe the relevant standards, regulations and these instructions.

Prerequisites for mounting:

- Cabinet with appropriate protection rating (at least IP 54, NEMA 3)
- 35 mm-DIN top-hat supporting rail in accordance with DIN EN 50022
- Snap the Safety Relay onto the DIN rail.
- The Safety Relay can be connected to the sensors.

NOTICE

The Safety Relay may be damaged if mounted improperly!

The MSI-MC310/311 is not suitable for free wall mounting .

↳ Depending on the environmental conditions at the end user, a suitable protective housing type must be determined and used.

7 Electrical connection

WARNING

Risk of death by electric shock!

Depending on external wiring, dangerous voltages may be present at the switching outputs.

- During all work at the electrical system or electronics, make certain that each voltage supply has been interrupted and protected against being restarted.

The following must be observed for the current supply of the Safety Relay:

- The supply voltage must be 24 V DC (see chapter 13 „Technical data“).
- Acc. to EN 61558-2-6, the cables at the inputs are to be separated from mains by either a safety isolating transformer with limited output voltage in the case of failure or by means of appropriate isolation measures.

WARNING

Improper electrical connection may result in serious injury!

- Only allow competent persons to perform the electrical connection.
- Make certain that supply and signal lines are laid separately from power lines.
- Provide appropriate spark extinction for contactors/sequence relays in the cabinet.
- Observe the installation and operating information for the products that are to be connected via the Safety Relay (e.g., drive motors, brakes, etc.).

The following conditions apply for the electrical connection:

- The Safety Relay must be integrated in the control circuit acc. to EN ISO 13849-1/-2:2009.
- The cables must be laid separately/in a protected manner, acc. to EN ISO 13849-1/-2:2009.
- Shutdown of the supply voltage for operational purposes is not permissible.
- If only one sensor is used, the free inputs must be bridged.
- It is not permissible to connect the sensor lines in parallel with third-party components.
- The mixed connection of protective extra low voltage and low voltage (e.g., 240 V~) at terminals 13/14, 23/24, 31/32 is not permissible.
- To prevent welding of the MSI output contacts, an external fuse is required acc. to the technical specifications of the MSI-MC3x (see chapter 13.3 „MSI-MC310 Safety Relay“ or see chapter 13.4 „MSI-MC311 Safety Relay“) and for any other connected components.
- The OUT terminal (MSI-310) is not for operating external devices, but is rather intended only for supplying potential-free contacts.

7.1 Terminal assignments of the Safety Relay

WARNING

Selecting the wrong functions may result in serious accidents!

- Activate restart interlock if it is possible to reach or walk behind.
- For access guarding, make certain that the restart interlock cannot be unlocked from within the danger zone but that the danger zone can be viewed from the reset button (RES).
- Select the functions so that the Safety Relay is used as intended (see chapter 2.1 „Approved purpose and foreseeable improper operation“).

There are 16 terminals on the Safety Relay for connecting the cables. The connection of the Safety Relay is divided into sensor groups, additional functions, OSSDs and supply voltage.

7.1.1 MSI-MC310 Safety Relay

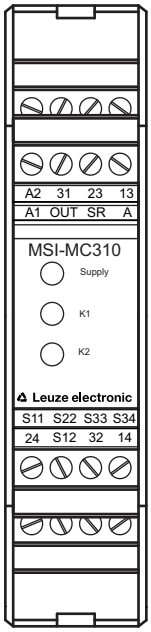

Figure 7.1: MSI-MC310, terminal assignments

Table 7.1: MSI-MC310, terminal designations

Terminal designation	Function	Description
A1, A2	Input	Voltage supply
S11	Output	For sensor 1, contact NO + sensor 2/x, contact NO
S12	Input	Sensor 1, contact NO
S22	Input	Sensor x, contact NO
S33	Output	Sensor 1, contact NC + sensor 2/x, contact NC
S34	Input	Sensor 1, contact NC + sensor 2/x, contact NC
OUT	Output	For start- and EDM circuit
SR	Input	For start- and EDM circuit
A	Input	For “automatic” operating mode with or without EDM
13/14	Relay contacts	OSSD 1, safety-related release circuit 1
23/24	Relay contacts	OSSD 2, safety-related release circuit 2
31/32	Relay contacts	EDM-, signaling circuit

Table 7.2: MSI-MC310, evaluation and bridging

Evaluation	Safety level	Connection, terminal	Bridging, if the adjacent terminal group is not needed
1 sensor	PL e, cat. 4, PDF-M	S11 ® NO ® S12	S11 ® bridge ® S22
1 sensor		S33 ® NC ® S34	

Evaluation	Safety level	Connection, terminal	Bridging, if the adjacent terminal group is not needed
2 sensors	PL e/d, cat. 3, PDF-S	S11 ® NO(1) ® S12 and S11 ® NO(2) ® S22	
2 sensors		S33 ® NC(1) ® S34 and S33 ® NC(2) ® S34	
x sensors	PL e/d, cat. 3, PDF-S	S11 ® NO(1) ® NO(2) to NO(x) ® S12	S11 ® bridge ® S22
x sensors		S33 ® NC(2) ® S34 to S33 ® NC(x) ® S34	

Table 7.3: MSI-MC310, evaluation and operating mode

Evaluation	Operating mode	Connection, terminal
Reset button (RES)	RS	OUT ® (RES) ® SR
Reset button (RES) and contactor	RS, EDM	OUT ® (RES) ® EDM ® SR
Contactor	Autom. start, EDM	OUT ® EDM ® A
	Autom. start	OUT ® bridge ® A

7.1.2 Sensor pin assignment (1NC/1NO)

The MC3x sensors (1NC/1NO) are equipped with either M8, M12 connectors or with a PVC or PUR connection cable, in various lengths and with wire-end sleeves.

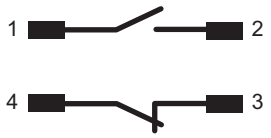

1 Brown
2 White
3 Blue
4 Black

Figure 7.2: Wire assignment, colors of the connection cable, state without activation by actuator

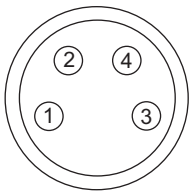

Pin 1 Brown
Pin 2 White
Pin 3 Blue
Pin 4 Black

Figure 7.3: Pin assignments of the M8 connector

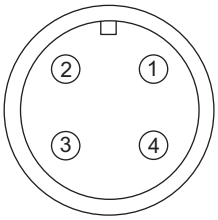

Pin 1 Brown
Pin 2 White
Pin 3 Blue
Pin 4 Black

Figure 7.4: Pin assignments of the M12 connector

7.1.3 MSI-MC311 Safety Relay

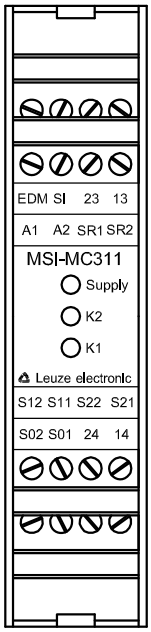

Figure 7.5: MSI-MC311, terminal assignments

Table 7.4: MSI-MC311, terminal designations

Terminal designation	Function	Description
A1, A2	Input	Voltage supply
S11	Input	Contact 1, NO
S12	Output	Contact 1, NO
S21	Input	Contact 2, NO
S22	Output	Contact 2, NO
SR1	Input	Start circuit 1
SR2	Input	Start circuit, bridged
SI	Relay contact input	Status
S01	Relay contact output	Status off
S02	Relay contact output	Status on

Terminal designation	Function	Description
EDM	Input	EDM circuit
13/14	Relay contacts	OSSD 1, safety-related release circuit 1
23/24	Relay contacts	OSSD 2, safety-related release circuit

Table 7.5: MSI-MC311, evaluation and bridging

Evaluation	Safety level	Connection, terminal
1 sensor	PL e, cat. 4, PDF-M	S11 ® NO ® S12
		S21 ® NO ® S22
2 sensors	PL e/d, cat. 3, PDF-S	S11 ® NO(11) ® NO(21) ® S12
		S21 ® NO(12) ® NO(22) ® S22
x sensors	PL e/d, cat. 3, PDF-S	S11 ® NO(11) ® NO(21) ® NO(x1) ® S12
		S21 ® NO(12) ® NO(22) ® NO(x2) ® S22

Table 7.6: MSI-MC311, evaluation and operating mode

Evaluation	Operating mode	Connection, terminal	Bridging
Reset button (RES)	RS, single-channel	A2 ® (RES) ® SR1	SR1 ® bridge ® SR2
Contactors K3, K4	EDM	S12 ® K3, K4® EDM	
	Autom. start		EDM ® bridge ® SR1 EDM ® bridge ® SR2

7.2 Sensor pin assignment (2NO)

The MC3x sensors (2NO) are equipped with either M8, M12 connectors or with a PVC or PUR connection cable, in various lengths and with wire-end sleeves.

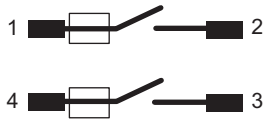

1 Brown
2 White
3 Blue
4 Black

Figure 7.6: Wire assignment, colors of the connection cable, state without activation by actuator

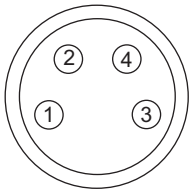

Pin 1 Brown
Pin 2 White
Pin 3 Blue
Pin 4 Black

Figure 7.7: Pin assignments of the M8 connector

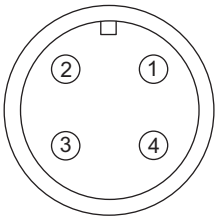

Pin 1 Brown
Pin 2 White
Pin 3 Blue
Pin 4 Black

Figure 7.8: Pin assignments of the M12 connector

7.3 Connection examples

Prerequisites for the electrical connection:

- The maximum temperature of the application does not exceed that specified in the technical data of the sensors (see chapter 13 „Technical data“)
- Contact assignments are adhered to

↳ Lay sensor connection cable and connect according to the assignment specifications and the application-specific circuit diagram.

↳ Connect the MSI-MC3x according to the application-specific circuit diagram.

↳ Setting the device into service

NOTICE
Improper electrical connection may result in serious injury!
↳ The mixed connection of protective extra low voltage and low voltage at terminals 13/14, 23/24 and 31/32 (MSI-3x) is not permitted.
↳ Finger-safe acc. to DIN VDE 0106 part 100, maximum stripped length of the connection cables: 8 mm
↳ To prevent welding of the respective output contacts, an external fuse must be connected upstream.
↳ All reactive loads connected to the supply voltage are to be provided with interference-suppression circuits.
↳ For reactive loads on terminals 13/14, 23/24, 31/32 (MSI-3x), an appropriate protective circuit is to be provided.
↳ Shutdown of the supply voltage for operational purposes is to be made impossible.

7.3.1 Connection examples with MC3xS1x sensors and MSI-MC310 Safety Relay

The following examples show possible connection combinations of Magnetically Coded Sensors on the Safety Relay for contact set 1NC/1NO.

All available safety inputs must be occupied. Bridges are to connect the remaining inputs where no sensors are connected .

The following wiring diagram shows the connection of an MC3xS1x for achieving safety category 4 and Performance Level e. For access safeguarding, it also includes the “start/restart interlock” operating mode and a reset button.

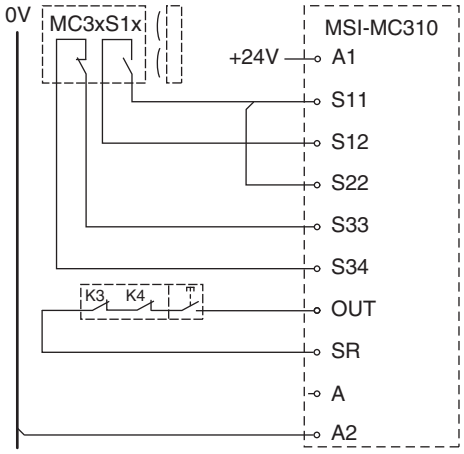

Figure 7.9: Example 1: Two-channel connection of an MC3xS1x with start/restart interlock and contactor monitoring (EDM), contact drawing without activation by actuator

The following wiring diagram shows the connection of two MC3xS1x for achieving safety category 3 and Performance Level e or d. If the guard cannot be reached or stepped around the “Automatic start/restart” operating mode is permissible for the benefit of an efficient system design.

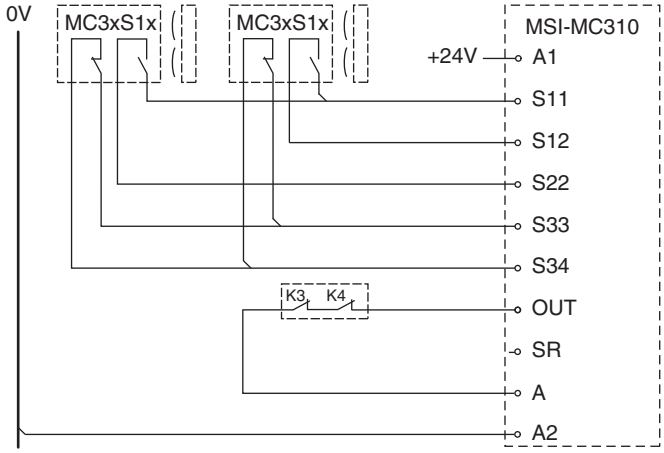

Figure 7.10: Example 2: Connection of two MC3xS1x with automatic start/restart interlock and contactor monitoring (EDM), contact drawing without activation by actuator

The following wiring diagram shows the connection of four MC3xS1x on two doors for achieving safety category 3 and Performance Level e or d.

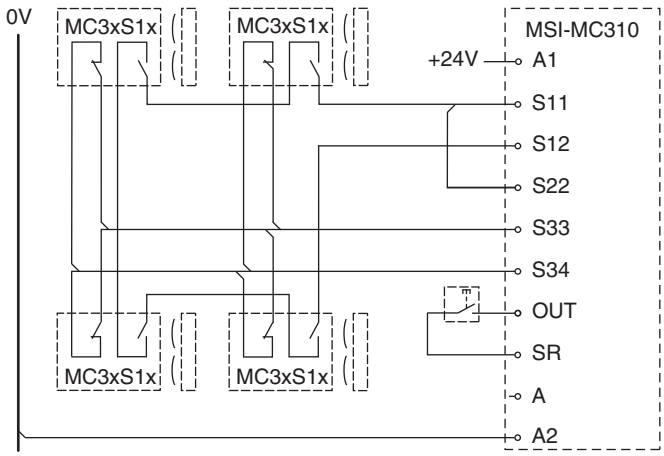

Figure 7.11: Example 3: Connection of four MC3xS1x with start/restart interlock, contact drawing without activation by actuator

The following wiring diagram shows the connection of several MC3xS1x for achieving safety category 3 and Performance Level e or d in the case of access safeguarding (start/restart interlock, EDM). Up to 30 moveable guards can be monitored in this way. Safeguarding in the switch-off circuit must satisfy the specifications for K1, K2 as well as those of the downstream contactors.

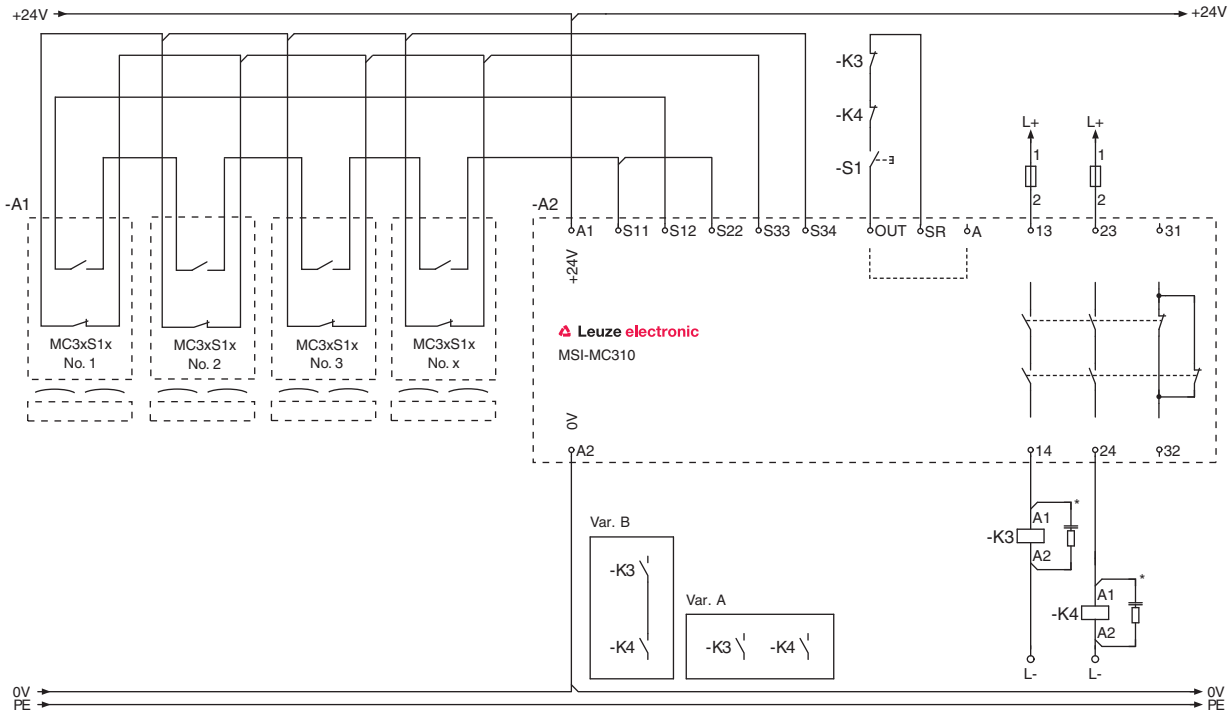

*) Spark extinction circuit, suitable spark extinction provided

Figure 7.12: Example 4: Connection of several MC3xS1x with start/restart interlock and contactor monitoring (EDM), contact drawing without activation by actuator

7.3.2 Connection examples with MC3xS2x sensors and MSI-MC311 Safety Relay

The following examples show possible connection combinations of Magnetically Coded Sensors on the Safety Relay for contact set 2NO.

All available safety inputs must be occupied. Bridges are to connect the remaining inputs where no sensors are connected .

The following wiring diagram shows the connection of an MC3xS2x for achieving safety category 4 and Performance Level e. For access safeguarding, it also includes the “start/restart interlock” operating mode and a reset button

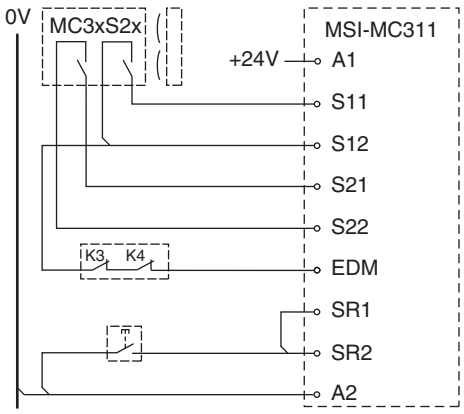

Figure 7.13: Example 1: Two-channel connection of an MC3xS2x with start/restart interlock and contactor monitoring (EDM), contact drawing without activation by actuator

The following wiring diagram shows the connection of two MC3xS2x for achieving safety category 3 and Performance Level e or d. If the guard cannot be reached or stepped around the “Automatic start/restart” operating mode is permissible for the benefit of an efficient system design.

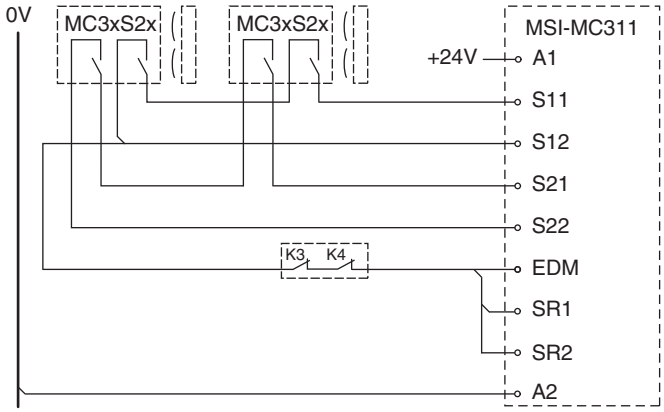

Figure 7.14: Example 2: Connection of two MC3xS2x with automatic start/restart and contactor monitoring (EDM), contact drawing without activation by actuator

The following wiring diagram shows the connection of several MC3xS2x for achieving safety category 3 and Performance Level e or d in the case of access safeguarding (start/restart interlock, EDM). Up to 30 moveable guards can be monitored in this way. Safeguarding in the switch-off circuit must satisfy the specifications for K1, K2 as well as those of the downstream contactors.

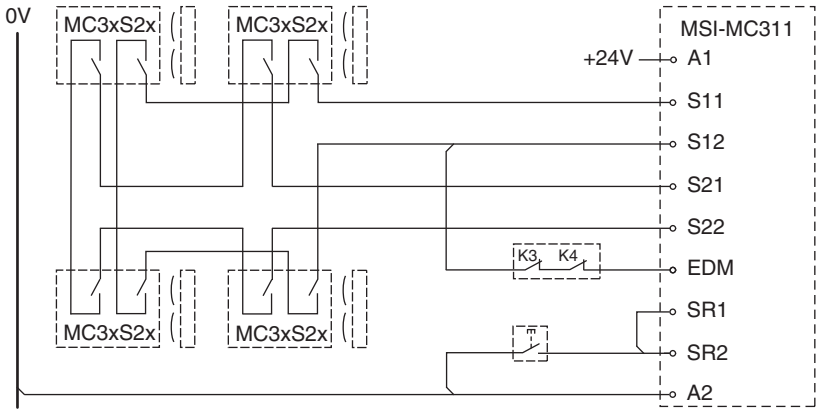

Figure 7.15: Example 3: Connection of four MC3xS2x with start/restart interlock, contact drawing without activation by actuator

7.4 Connecting to the machine control

The safety-related parts of the control include, in addition to the Safety Relay, sensor and actuator described above, the subsequent control elements up to the power-transfer elements that are to be stopped safely and timely. Special attention must be given here to the adherence to the required safety category. Important information on this topic can be found in harmonized European standard EN ISO 13849-1.

Essential prerequisite for the safe operation is the possibility of electrically influencing the interruption of the dangerous movement as well as a sufficiently short machine stand-still time. These must be incorporated in the calculation of the safety distance as must the response times of the safety-related chain (Safety Relay, sensors, contactors, etc.).

Setting the device into service

WARNING

Improper use of the Safety Relay may result in serious injury!

- Make certain that the entire device and the integration of the protective device was inspected by competent and instructed persons.
- Make certain that a dangerous process can only be started while the guard is closed.

Prerequisites for start-up:

- Safety Relay, sensor and actuator are mounted according to these instructions and connected according to the wiring plan
- operating personnel have been trained in the correct use
- The dangerous process is switched off, outputs of the MSI-MC3x are disconnected and the system is protected against being restarted

- During start-up, test the function of the sensors and the Safety Relay (see chapter 8 „Testing“).
- Prior to the initial start-up on a power-driven machine, make certain that a competent person inspects the connection of the connected guard at the Safety Relay as well as the integration of the complete system in the machine control.
- Before switching on the supply voltage for the first time, make certain that the outputs of the Safety Relay have no effect on the machine.
- Make certain that the switching elements that put the machine which poses a danger into motion are safely switched off or disconnected and are protected against being restarted.

The same safety measures apply after each function change, after repairs or during maintenance work.

7.5 Switching on

Requirements for the supply voltage (power supply unit):

- Safe mains separation is ensured (acc. to IEC 60742).
- Current reserve of at least 2 A available

The start/restart interlock function (where foreseen) connected and activated.

The guard is closed and has not been stepped around.

- Check whether the green power LED on the MSI-MC3x illuminates constantly.
- Check whether LEDs K1 and K2 of the MSI-MC3x switch off upon opening of the guard

The MSI-MC3x Safety Relay and the sensor are ready for use.

7.6 Reset

The reset button can be used to unlock the start/restart interlock (where foreseen). In this way, the responsible person can restore normal operation of the system following process interruptions (triggering of the protective function, failure of the voltage supply) (see chapter 7.7 „Unlocking start/restart interlock“).

7.7 Unlocking start/restart interlock

⚠ WARNING

Premature unlocking of the start/restart interlock may result in serious injury.

If the start/restart interlock is unlocked, the system can start-up.

↳ Before unlocking the start/restart interlock, make certain that no people are in the danger zone.

LEDs K1 and K2 do not illuminate as long as the restart is disabled.

↳ Make certain that the guard is closed.

↳ Make certain that there are no people in the danger zone.

↳ Press and release the reset button.

The MSI-MC3x switches to the ON state, LEDs K1 and K2 illuminate.

8 Testing

⚠ WARNING
A running machine may result in serious injury!
↳ Make certain that, during all conversions, maintenance work and inspections, the system is securely shut down and protected against being restarted.

The Safety Relays and sensors are maintenance-free. Nevertheless, they must be replaced after a maximum of 20 years.

↳ Always completely replace the sensors together with actuator.

↳ For the tests, observe nationally applicable regulations.

↳ Document all tests in a comprehensible manner.

8.1 Before the initial start-up and following modifications

Acc. to IEC TS 62046 and national regulations (e.g., EU directive 89/655 EEC amended by 95/63/EC), tests are to be performed by competent persons in the following situations:

- Prior to the initial start-up
- Following modification to the machine
- After longer machine downtime
- Following retrofitting or reconfiguring the safety device (Safety Relay, sensors and their actuators, etc.)

⚠ WARNING
Unpredictable machine behavior during initial start-up may result in serious injury!
↳ Make certain that there are no people in the danger zone.

↳ Test the effectiveness of the shutdown function in all operating modes of the machine acc. to the following checklist (see chapter 8.1.1 „Checklist – before the initial start-up“).

↳ Document the test of the safety device (including alignment and positioning of sensors, their actuators, Safety Relay, etc.) along with the wiring diagram of the MSI-MC3x and the data for safety and minimum distances in a comprehensible manner.

↳ Before they begin work, train the operating personnel on their respective tasks. The training is the responsibility of the operating company.

↳ Check whether the safety device (sensors, their actuators, Safety Relay, etc.) was correctly selected in accordance with the locally applicable regulations and directives.

↳ Attach notices in the respective national language of the operating personnel on the machine in a highly visible location, e.g., by printing out the corresponding chapter (see chapter 8.3 „To be performed daily by the operating personnel“).

↳ Check whether the safety device (sensors, their actuators, Safety Relay, etc.) is operated acc. to the specified environmental conditions (see table 13.3).

↳ Check whether the Safety Relay, sensor and actuator are operated according to their specified environmental conditions (see chapter 13 „Technical data“). Make certain that the MSI-MC3x is protected against overcurrent.

↳ Perform a visual inspection for damage and test the mechanical and electrical function (see chapter 8.2 „To be performed periodically by competent persons“).

Minimum requirements for the power supply unit:

- Safe mains separation
- At least 2 A current reserve

Not until proper monitoring of the guard is ascertained may it be integrated in the control circuit of the system.

8.1.1 Checklist – before the initial start-up

Tester: Competent person

Table 8.1: Checklist – before the initial start-up

Check	Yes	No
Were all safety directives and standards relevant to this machine type observed?		
Does the Declaration of Conformity of the machine include a listing of these documents?		
Do the Safety Relay, sensor and actuator satisfy the safety-related capability (PL, category) as required by the risk assessment?		
Circuit diagram: Are both safety-related switching outputs (OSSDs) integrated in the downstream machine control acc. to the required safety category?		
Circuit diagram: Are the switching elements (e.g. contactors, relays) with positive-guided contacts that are controlled by the MSI-MC3x Safety Relay monitored by a feedback circuit (EDM)?		
Have the cables been laid separately/in a protected manner?		
Does the electrical wiring match the circuit diagrams?		
Have the required protective measures against electrical shock been effectively implemented?		
Has the maximum stopping time of the machine been remeasured and recorded in the machine documents?		
Is the required safety distance between the guard (moveable part of the guard) and the nearest point of operation maintained, taking into account all response times?		
Are all of the machine's points of operation accessible only through the monitored moveable part of the guard?		
Are all additional protective devices (e.g. safety guards) correctly mounted and protected against tampering?		
Is the reset button for releasing the start/restart interlock of the MSI-MC3x mounted outside of the danger zone in accordance with specifications in such a way that it cannot be reached from within the danger zone? Can the entire danger zone be seen from the place at which the reset button is installed?		
Are sensor and actuator correctly aligned and are all fastening screws and plugs secure?		
Are all parts of the safety device undamaged and without signs of tampering?		
Has the effectiveness of the protective function been checked for all operating modes of the machine by means of a function test?		
Does opening of the monitored moveable part of the guard cause the dangerous process to stop in such a way that the dangerous process cannot be reached during the stopping time?		

Check	Yes	No
Upon disconnection of the MSI-MC3x from the supply voltage, does the dangerous process stop? If reaching or stepping around is possible, is it necessary to actuate the reset button to reset the machine after the supply voltage is restored?		
Are the sensors and the Safety Relay effective during the entire dangerous process of the machine and do they cause the dangerous movement to stop?		
Are the notices for recommended daily testing of the safety device legible to the operating personnel and are they located in a highly visible location?		

↳ Store this checklist with the machine documents.

8.2 To be performed periodically by competent persons

The reliable interaction of guard and machine must be periodically tested in order to detect changes to the machine or impermissible tampering with the guard. Testing intervals are determined by nationally applicable regulations (recommendation acc. to IEC TS62046: 6 months).

↳ Have all tests performed by competent persons.

↳ Observe the nationally applicable regulations and the time periods specified therein.

8.3 To be performed daily by the operating personnel

We recommend that the safety device be checked daily or at change of shifts and at each change of machine operating mode acc. to the following checklist (see chapter 8.3.1 „Check list – daily or at change of shift“) so that damages or impermissible tampering can be detected.

⚠ WARNING

If the daily check is carried out incorrectly, further operation of the machine can lead to severe injuries!

↳ Replace damaged components immediately.

↳ The machine must no longer be operated if you answer one of the items in the following checklist (see chapter 8.3.1 „Check list – daily or at change of shift“) with no.

↳ Have the entire machine inspected by a competent person (see chapter 8.1 „Before the initial start-up and following modifications“).

↳ Stop the dangerous process.

↳ Check sensor and actuator for damage or tampering.

↳ Open doors, hoods, flaps, etc., from a location outside of the danger zone and make certain that the machine cannot be started while the guards are open.

↳ Make certain that no one is present in the danger zone.

↳ Close the guard and start the machine.

↳ Make certain that the dangerous state stops as soon as the guard is opened.

8.3.1 Check list – daily or at change of shift

Tester: Authorized operator or instructed person

Check	Yes	No
Are sensor and actuator in the correct position and are the housing markings aligned? Are all fastening screws tightened; are all connectors fastened?		
Are sensor and actuator, connection cable, plug and reset button undamaged and without signs of tampering? Are sensor and actuator free of deposits (e.g., ferromagnetic filings)?		
Are all point of operation of the machine accessible only through monitored moveable guards or equivalent protective devices?		
Are all additional protective devices mounted correctly (e.g., safety guard)? Is it impossible to walk or reach behind?		
Does the start/restart interlock (where foreseen) prevent the automatic start-up of the machine after switching on or activating • the Magnetically Coded Sensor • the Safety Relay?		
Is the dangerous process brought to an immediate standstill upon opening of the guard? Does the dangerous process end before the point of operation can be reached?		

9 Cleaning

NOTICE
Operating faults due to impairment caused by ferromagnetic particles. Sensor and actuator must be free of ferromagnetic soiling. ↳ Use no cleaning agents that contain solvents.

Prerequisites for cleaning:

- The system is safely shut down and protected against being restarted.
- Remove metal dust, iron filings, etc.

Clean sensor and actuator depending on degree of contamination

- with, e.g., a vacuum cleaner or a clean cloth
- with solvent-free cleaning agents

10 Rectifying the fault

10.1 What to do in case of failure?

After switching on the Safety Relay, display elements (see chapter 3.1 „Device overview“) assist in checking the proper function and troubleshooting.

In case of failure, use the LEDs to recognize the fault and initiate rectification measures.

NOTICE
If the MSI-MC3x does not switch on with closed guard, a component may be defective. ↳ Switch off the machine and protect it against being restarted. ↳ Analyze and eliminate the cause of the fault using the following table. ↳ If you are unable to rectify the fault, contact the Leuze branch responsible for you or call the Leuze electronic Hotline (see chapter 12 „Service and support“).

10.2 Rectifying the fault

Power supply unit	Display	OSSDs	Cause	Measure
On	“Supply” LED on	K1, K2 off	Guard open	Close the guard.
On	“Supply” LED on	K1, K2 off	Sensor incorrectly aligned	Correct the sensor again.
On	“Supply” LED on	K1, K2 off	Actuator missing	Mount the corresponding actuator.
On	“Supply” LED on	K1, K2 off	Sensor defective	Replace the respective sensor.
On	“Supply” LED off	K1, K2 off	Fuse U_b defective	Replace fuse U_b.
On	“Supply” LED off	K1, K2 off	MSI-MC310 defective	Replace the Safety Relay.
Off	“Supply” LED off	K1, K2 off	No operating voltage	Switch on the power supply unit.
???	“Supply” LED off	K1, K2 off	Power supply unit defective	Replace the power supply unit.
On	“Supply” LED on	K1, K2 on	External fuse in switch-off circuit defective	Replace the external fuse.
On	“Supply” LED off	K1, K2 off	External short circuit U_b	Rectify the short circuit and replace the fuse.
On	“Supply” LED on	K1, K2 on	External cross connection in the switch-off circuit	Rectify the cross connection and replace the fuse.

11 Disposing

For disposal observe the applicable national regulations regarding electronic components.

12 Service and support

Telephone number for 24-hour standby service:
+49 (0) 702 573-0

Service hotline:
+49 (0) 8141 5350-111
Monday to Thursday, 8.00 a.m. to 5.00 p.m. (UTC+1)
Friday, 8.00 a.m. to 16.00 p.m. (UTC +1)

E-mail:
service.protect@leuze.de

Return address for repairs:
Service Center
Leuze electronic GmbH + Co. KG
In der Braike 1
D-73277 Owen/Germany

13 Technical data

13.1 Magnetically Coded Sensors, actuator, contact set 1NC/1NO

Table 13.1: Safety-relevant technical data

Actuator, external	Magnetically coded, compatible with respective sensor series
Safe switching distances and off distance if markings are aligned: Sao = assured cut-in distance OFF = cut-out point Sar = assured cut-out distance	
388 series: Sao (ON), (OFF), Sar	< 6 mm, > 13 mm, > 30 mm
336 series: Sao (ON), (OFF), Sar	< 3 mm, > 8 mm, > 11 mm
330 series: Sao (ON), (OFF), Sar	< 6 mm, > 12 mm, > 14 mm
Switching tolerance (without ferromagnetic materials in immediate vicinity)	± 1 mm
Certification	TÜV-SÜD, cULus
Contact type	Reed contacts (magnetically sensitive)
Contact allocation	1NC/1NO
Mechanical life time	10 million switching cycles
Max. switching voltage	27 V AC/DC
Switched current Ie max.	0.5 A
Short circuit protection	By means of MSI-MC310 Safety Relay
Installation point	Arbitrary, provided housing markings are aligned
Min. distance to other magnetic sensors	50 mm
Approach actuation directions	In longitudinal axis, left and right In vertical axis, up and down In depth, to and from sensor
Min. approach speed of actuator towards sensor	50 mm/s
Response time	3 ms

Table 13.2: Connection

Number of connection cable infeeds	1 (connection cable or M8 plug)
Connection type	Connection cable with wire-end sleeves or M8 plug, each molded to housing
Conductor cross-section (stranded)	4 x 0.35 mm^2 (connection cable)

Table 13.3: Environment

Ambient temperature, operation	-20 … +70 °C
Vibration, sensitivity acc. to	EN 60947-5-3:2005
Shock, sensitivity acc. to	EN 60947-5-3:2005
Dirt level, external, in accordance with EN 60947-1	3
EMC compliance	EN 60947-5-3:2005 EN 61000-6-3:2007 EN 61000-6-2:2005 EN 55011:2003

Table 13.4: Housing

Sensor material	Plastic, glass fiber reinforced (PPS)
Actuator material	Plastic, glass fiber reinforced (PPS)
Dimensions (dimensional drawings)	see chapter 14 „Dimensions and weights“
Protection rating acc. to EN 60529	IP 67

13.2 Magnetically Coded Sensors, actuator, contact set 2NO

Table 13.5: Safety-relevant technical data

Actuator, external	Magnetically coded, compatible with respective sensor series
Safe switching distances and off distance if markings are aligned: Sao = assured cut-in distance OFF = cut-out point Sar = assured cut-out distance	
388 series: Sao (ON), (OFF), Sar	< 9 mm, > 19 mm, > 22 mm
336 series: Sao (ON), (OFF), Sar	< 7 mm, > 17 mm, > 20 mm
330 series: Sao (ON), (OFF), Sar	< 6 mm, > 15 mm, > 18 mm
Switching tolerance (without ferromagnetic materials in immediate vicinity)	± 1 mm
Certification	TÜV-SÜD, cULus
Contact type	Reed contacts (magnetically sensitive)
Contact allocation	2NO with upstream fuse
Mechanical life time	10 million switching cycles
Max. switching voltage	27 V AC/DC
Switched current Ie max.	100 mA
Short circuit protection	By means of MSI-MC311 Safety Relay
Installation point	Arbitrary, provided housing markings are aligned
Min. distance to other magnetic sensors	50 mm

Approach actuation directions	In longitudinal axis, left and right In vertical axis, up and down In depth, to and from sensor
Min. approach speed of actuator towards sensor	50 mm/s
Response time	3 ms

Table 13.6: Connection

Number of connection cable infeeds	1 (connection cable or M8 plug)
Connection type	Connection cable with wire-end sleeves or M8 plug, each molded to housing
Conductor cross-section (stranded)	4 x 0.35 mm² (connection cable)

Table 13.7: Environment

Ambient temperature, operation	-20 … +70 °C
Vibration, sensitivity acc. to	EN 60947-5-3:2005
Shock, sensitivity acc. to	EN 60947-5-3:2005
Dirt level, external, in accordance with EN 60947-1	3
EMC compliance	EN 60947-5-3:2005 EN 61000-6-3:2007 EN 61000-6-2:2005 EN 55011:2003

Table 13.8: Housing

Sensor material	Plastic, glass fiber reinforced (PPS)
Actuator material	Plastic, glass fiber reinforced (PPS)
Dimensions (dimensional drawings)	see chapter 14 „Dimensions and weights“
Protection rating acc. to EN 60529	IP 67

13.3 MSI-MC310 Safety Relay

Table 13.9: Safety-relevant technical data

Safety category acc. to EN 13849-1:2008	4, 1 sensor connected	3, More than 1 sensor connected	
Performance Level (PL) in accordance with EN ISO 13849-1:2008	PL e	PL e	PL d
Average probability of a dangerous failure per hour (PFH_d)	2.47×10^{-8}	4.29×10^{-8}	1.03×10^{-7}
with mean annual number of switching cycles performed by the relay (N_{op})			

AC-15 I = 0.9 A DC-13 I = 0.1 A I = 1 A I = 1.5 A	29500 97000 75000 18000	29500 97000 75000 18000	65000 261000 128000 31500
Mean time to dangerous failure ($MTTF_d$ in years)	100	100	56
Assignment in accordance with EN 60947-5-3:2005	PDF-M	PDF-S	
Service life (T_M) in accordance with EN ISO 13849-1:2008 (in years)	20 (when $MTTF_d$ = 100)		
Stop category in accordance with EN 60204-1, EN 13850:2008	STOP 0		
Sensor type	Interlock device without guard interlocking in accordance with EN 1088		

Table 13.10: General system data

Available functions	Stop function, start/restart interlock/RES Contactor monitoring (EDM) in start circuit
Control input SR for start/restart interlock (reset)	Potential-free N/O contact (RES-button or key switch)
Connectable sensors (S11, S12, S22) (S33, S34)	Series MC388-S1x, MC336-S1x, MC330-S1x
Contact type of the sensors	1NC / 1NO
Max. number of sensors	30, serial
Cable length, sensors	30 m
Pickup delay manual start	600 ms
Pickup delay automatic start	400 ms
Max. activation time window between two sensor channels	500 ms
Regression delay, response time	20 ms
Operating voltage U_b	24 V AC/DC, ± 10 %, SELV (AC 50-60 Hz)
Max. input current with 24 V DC/AC	10 mA to 110 mA / 30 mA to 150 mA
Max. switched current, AC-1	3 A
Min. switched current	10 mA
Max. switching power	720 W
Rated insulation voltage	250 V AC
Mechanical life time	10 million switching cycles
Requirement on the voltage supply when used acc. to cULus (UL 508)	Class 2 Circuits
Overvoltage category	II

Output contacts, OSSDs OSSD protective circuit	2 normal open contacts (N/O), 1 normal closed contact (N/C) Provide suitable spark extinction (via relays, contactors)
OSSD switching capacity in accordance with EN 60947-5-1	AC-15 (Ue / Ie): 240 V / 0.9 / 3.5 × 10^5 DC -13 (Ue / Ie): 24 V / 1.5 A / 1 × 10^5
Auxiliary contacts, switching capacity, max.	24 V DC, 1.5 A
Internal safeguarding of U_b	750 mA per PTC Multifuse
External contact fuse protection in accordance with EN 60269-1	4 A gG

Table 13.11: Connection

Protection rating acc. to EN 60529	Housing IP 40, terminals IP 20 for installation in cabinet or housing with protection rating of at least IP 54 required Finger-safe acc. to DIN VDE 0106 part 100, maximum stripped length of the connection cables 8 mm
Connection cross-section (GS-ET-20:2009)	1 x 0.2 to 2.5 mm^2, fine-wired or 1 x 0.25 to 2.5 mm^2, fine-wired with wire-end sleeves 2 x 0.5 to 1.5 mm^2, fine-wired with Twin wire-end sleeves 1 x 0.2 to 2.5 mm^2, single-wired or 2 x 0.25 to 1.0 mm^2, fine-wired with wire-end sleeves 2 x 0.2 to 1.5 mm^2, fine-wired 2 x 0.2 to 1.0 mm^2, single-wired

Table 13.12: Environment

Ambient temperature, operation Relative humidity (non- condensing)	0 … +55 °C 4 … 100 %
Ambient temperature storage Relative humidity (non- condensing)	-25 … +70 °C 5 … 95 %
Vibration resistance	EN 60947-5-3:2005
Dirt level, external, in accordance with EN 60947-1	2
EMC compliance	EN 60947-5-3:2005 EN 61000-6-3:2007 EN 61000-6-2:2005 EN 55011:2003

Table 13.13: Housing

Material	Plastic (PA)
Dimensions (dimensional drawings)	see chapter 14 „Dimensions and weights“
Installation point	Arbitrary, on 35 mm DIN top-hat supporting rail in accordance with DIN EN 50022
Weight	see table 14.1

These tables do not apply in combination with additional M12 plug or connecting cable. except where these components are explicitly mentioned.

13.4 MSI-MC311 Safety Relay

Table 13.14: Safety-relevant technical data

Safety category acc. to EN 13849-1:2008	4, 1 sensor connected	3, More than 1 sensor connected	
Performance Level (PL) in accordance with EN ISO 13849-1:2008	PL e	PL e	PL d
Average probability of a dangerous failure per hour (PFH_d)	2.47×10^{-8}	4.29×10^{-8}	1.03×10^{-7}
with mean annual number of switching cycles performed by the relay (N_{op}) AC-15 I = 0.9 A DC-13 I = 0.1 A I = 1 A I = 1.5 A	 28500 3800000 115000 57000	 28500 3800000 115000 57000	 47500 6300000 195000 95000
Mean time to dangerous failure ($MTTF_d$ in years)	100	100	56
Assignment in accordance with EN 60947-5-3:2005	PDF-M	PDF-S	
Service life (T_M) in accordance with EN ISO 13849-1:2008 (in years)	20 (when $MTTF_d$ = 100)		
Stop category in accordance with EN 60204-1, EN 13850:2008	STOP 0		
Sensor type	Interlock device without guard interlocking in accordance with EN 1088		

Table 13.15: General system data

Available functions	Stop function, start/restart interlock/RES Contactor monitoring (EDM) in start circuit
Control input SR for start/restart interlock (reset)	Potential-free N/O contact (RES-button or key switch)
Connectable sensors (S11, S12, S22) (S33, S34)	Series MC388-S2x, MC336-S2x, MC330-S2x
Contact type of the sensors	2NO
Max. number of sensors	30, serial
Cable length, sensors	30 m
Pickup delay manual start	150 ms
Pickup delay automatic start	30 ms
Regression delay, response time	20 ms

Operating voltage U_b (A1 - A2)	24 V AC/DC, - 15 % … +10 %, SELV (AC 50-60 Hz)
Max. input current with 24V DC/AC	70 mA / 220 mA
Max. switched current	3 A
Min. switched current	10 mA
Max. switching power	720 W
Rated insulation voltage	250 V AC
Mechanical life time	10 million switching cycles
Overvoltage category	II
Output contacts, OSSDs (13 - 14) (23 - 24) OSSD protective circuit	2 normal open contact (2NO) Provide suitable spark extinction (via relays, contactors)
OSSD switching capacity in accordance with EN 60947-5-1 General application Resistive load Inductive load	3 A, 240 V AC Res 1.4 A, 240 V AC 1 A, 24 V DC
Auxiliary contacts, changeover, switching capacity, max. (SI - S01) NC (SI - S02) NO	24 V DC, 0.5 A
Internal safeguarding of U_b	750 mA per PTC Multifuse
External contact fuse protection in accordance with EN 60269-1	4 A gG

Table 13.16: Connection

Protection rating acc. to EN 60529	Housing IP 40, terminals IP 20 for installation in cabinet or housing with protection rating of at least IP 54 required Finger-safe acc. to DIN VDE 0106 part 100, maximum stripped length of the connection cables 8 mm
Connection cross-section (GS-ET-20: 2009)	1 x 0.2 to 2.5 mm^2, fine-wired or 1 x 0.25 to 2.5 mm^2, fine-wired with wire-end sleeves 2 x 0.5 to 1.5 mm^2, fine-wired with Twin wire-end sleeves 1 x 0.2 to 2.5 mm^2, single-wired or 2 x 0.25 to 1.0 mm^2, fine-wired with wire-end sleeves 2 x 0.2 to 1.5 mm^2, fine-wired 2 x 0.2 to 1.0 mm^2, single-wired
Connection cables, temperature resistance, min.	60 °C
Screw terminals, tightening torque	0.56 … 0.79 Nm

Table 13.17: Environment

Ambient temperature, operation Relative humidity (non- condensing)	-5 … +55 °C 4 … 100 %
Ambient temperature storage Relative humidity (non- condensing)	-25 … +70 °C 5 … 95 %
Vibration resistance	EN 60947-5-3:2005
Dirt level, external, in accordance with EN 60947-1	2
EMC compliance	EN 60947-5-3:2005 EN 61000-6-3:2007 EN 61000-6-2:2005 EN 55011:2003

Table 13.18: Housing

Material	Plastic (PA)
Dimensions (dimensional drawings)	see chapter 14
Installation point	Arbitrary, on 35 mm DIN top-hat supporting rail in accordance with DIN EN 50022
Weight	see table 14.1

These tables do not apply in combination with additional M12 plug or connecting cable. except where these components are explicitly mentioned.

14 Dimensions and weights

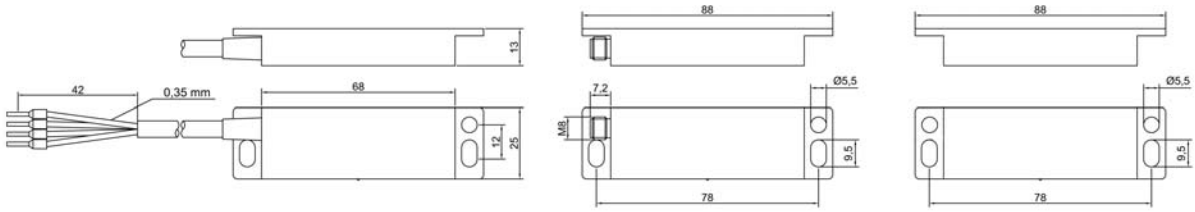

Figure 14.1: Dimensions of MC388x sensor and actuator

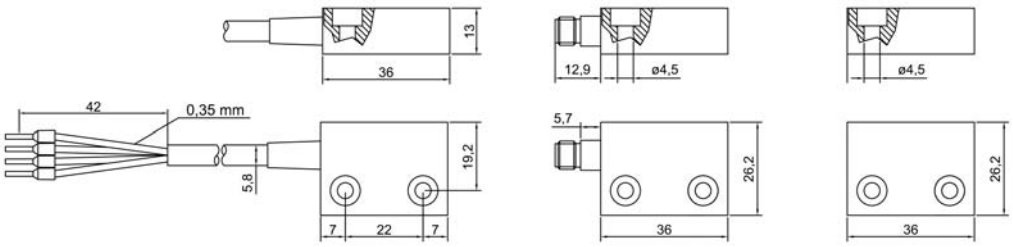

Figure 14.2: Dimensions of MC336x sensor and actuator

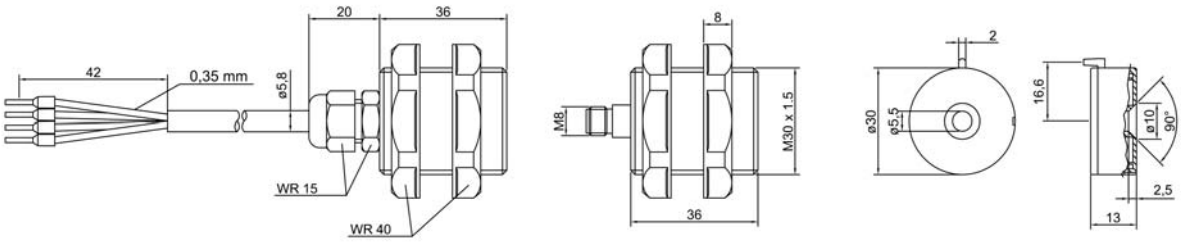

Figure 14.3: Dimensions of MC330x sensor and actuator

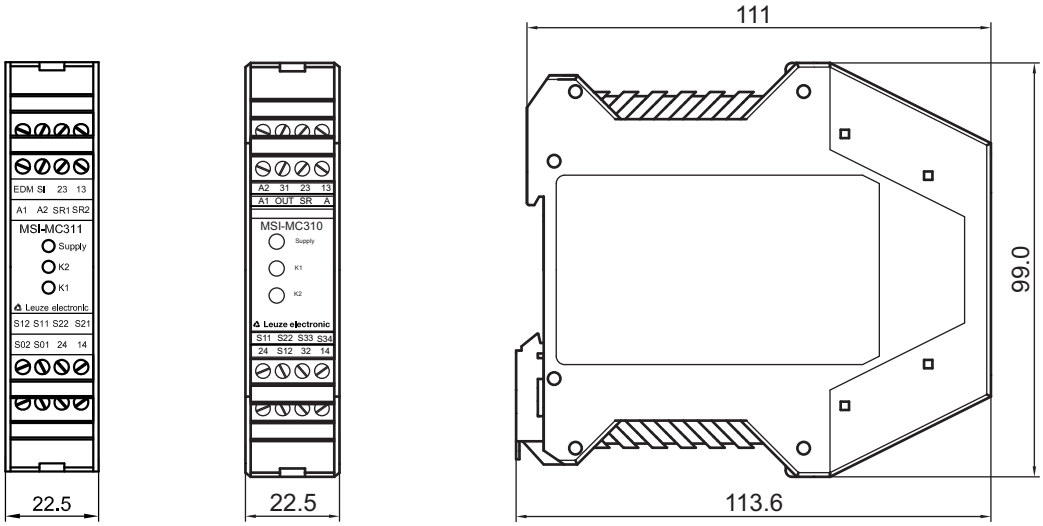

Figure 14.4: Dimensions of MSI-MC310/MSI-MC311 Safety Relay

Table 14.1: Weights

Description	Weight (g)
Magnetically Coded Sensors of the MC388 series	
MC388-S1C2-A	200
MC388-S1C5-A	345

Description	Weight (g)
MC388-S1C10-A	583
MC388-S1R2-A	190
MC388-S1R5-A	320
MC388-S1R10-A	531
MC388-S1M8-A	107
MC388-S1C02M12-A	134
MC388-S2C2-A	208
MC388-S2C5-A	353
MC388-S2M8-A	117
MC388-S2-C02M12-A	142
MC388 accessories	
MC388-S1-A	46
MC388-S2-A	47
MC388-SP-8	46
Magnetically Coded Sensors of the MC336 series	
MC336-S1C2-A	160
MC336-S1C5-A	305
MC336-S1C10-A	540
MC336-S1R2-A	150
MC336-S1R5-A	280
MC336-S1R10-A	488
MC336-S1M8-A	67
MC366-S1-C02M12-A	94
MC336-S2C2-A	172
MC336-S2C5-A	317
MC336-S2M8-A	82
MC336-S2C02M12-A	106
MC336 accessories	
MC336-S1-A	26
MC336-S2-A	25
MC336-SP-8	26
Magnetically Coded Sensors of the MC330 series	
MC330-S1C2-A	188
MC330-S1C5-A	334

Description	Weight (g)
MC330-S1C10-A	572
MC330-S1R2-A	178
MC330-S1R5-A	309
MC330-S1R10-A	520
MC330-S1M8-A	95
MC330-S1-C02M12-A	122
MC330-S2C2-A	200
MC330-S2C5-A	345
MC330-S2M8-A	110
MC330-S2-C02M12-A	134
MC330 accessories	
MC330-S1-A	21
MC330-S2-A	21
MSI-MC3x Safety Relays	
MSI-MC310	220
MSI-MC311	203

15 Ordering information and accessories

Order number	Description	Description	Connection
Magnetically Coded Sensors of the MC388 series			
63001000	MC388-S1C2-A	Sensor, 1NO/1NC	Connection cable 2 m, PVC
63001001	MC388-S1C5-A	Sensor, 1NO/1NC	Connection cable 5 m, PVC
63001002	MC388-S1C10-A	Sensor, 1NO/1NC	Connection cable 10 m, PVC
63001003	MC388-S1R2-A	Sensor, 1NO/1NC	Connection cable 2 m, PUR
63001004	MC388-S1R5-A	Sensor, 1NO/1NC	Connection cable 5 m, PUR
63001005	MC388-S1R10-A	Sensor, 1NO/1NC	Connection cable 10 m, PUR
63001006	MC388-S1M8-A	Sensor, 1NO/1NC	M8 plug 4-pin
63001007	MC388-S1C02M12-A	Sensor, 1NO/1NC	Connection cable with M12 plug 0.2 m, PVC
63001020	MC388-S2C2-A	Sensor, 2NO	Connection cable 2 m, PVC
63001021	MC388-S2C5-A	Sensor, 2NO	Connection cable 5 m, PVC
63001026	MC388-S2M8-A	Sensor, 2NO	M8 plug 4-pin
63001027	MC388-S2-C02M12-A	Sensor, 2NO	Connection cable with M12 plug 0.2 m, PVC
MC388 accessories			
63001150	MC388-S1-A	Actuator	
63001155	MC388-S2-A	Actuator	
63001153	MC388-SP-8	Spacer, 8 mm	
Magnetically Coded Sensors of the MC336 series			
63001050	MC336-S1C2-A	Sensor, 1NO/1NC	Connection cable 2 m, PVC
63001051	MC336-S1C5-A	Sensor, 1NO/1NC	Connection cable 5 m, PVC
63001052	MC336-S1C10-A	Sensor, 1NO/1NC	Connection cable 10 m, PVC
63001053	MC336-S1R2-A	Sensor, 1NO/1NC	Connection cable 2 m, PUR
63001054	MC336-S1R5-A	Sensor, 1NO/1NC	Connection cable 5 m, PUR
63001055	MC336-S1R10-A	Sensor, 1NO/1NC	Connection cable 10 m, PUR
63001056	MC336-S1M8-A	Sensor, 1NO/1NC	M8 plug 4-pin
63001057	MC366-S1-C02M12-A	Sensor, 1NO/1NC	Connection cable with M12 plug 0.2 m, PVC
63001070	MC336-S2C2-A	Sensor, 2NO	Connection cable 2 m, PVC
63001071	MC336-S2C5-A	Sensor, 2NO	Connection cable 5 m, PVC
63001076	MC336-S2M8-A	Sensor, 2NO	M8 plug 4-pin
63001077	MC336-S2C02M12-A	Sensor, 2NO	Connection cable with M12 plug 0.2 m, PVC

Order number	Description	Description	Connection
MC336 accessories			
63001151	MC336-S1-A	Actuator	
63001156	MC336-S2-A	Actuator	
63001154	MC336-SP-8	Spacer, 8 mm	
Magnetically Coded Sensors of the MC330 series			
63001100	MC330-S1C2-A	Sensor, 1NO/1NC	Connection cable 2 m, PVC
63001101	MC330-S1C5-A	Sensor, 1NO/1NC	Connection cable 5 m, PVC
63001102	MC330-S1C10-A	Sensor, 1NO/1NC	Connection cable 10 m, PVC
63001103	MC330-S1R2-A	Sensor, 1NO/1NC	Connection cable 2 m, PUR
63001104	MC330-S1R5-A	Sensor, 1NO/1NC	Connection cable 5 m, PUR
63001105	MC330-S1R10-A	Sensor, 1NO/1NC	Connection cable 10 m, PUR
63001106	MC330-S1M8-A	Sensor, 1NO/1NC	M8 plug 4-pin
63001107	MC330-S1-C02M12-A	Sensor, 1NO/1NC	Connection cable with M12 plug 0.2 m, PVC
63001120	MC330-S2C2-A	Sensor, 2NO	Connection cable 2 m, PVC
63001121	MC330-S2C5-A	Sensor, 2NO	Connection cable 5 m, PVC
63001126	MC330-S2M8-A	Sensor, 2NO	M8 plug 4-pin
63001127	MC330-S2-C02M12-A	Sensor, 2NO	Connection cable with M12 plug 0.2 m, PVC
MC330 accessories			
63001152	MC330-S1-A	Actuator	
63001157	MC330-S2-A	Actuator	
MSI-MC3x Safety Relays			
549941	MSI-MC310	Safety Relay	
549942	MSI-MC311	Safety Relay	

16 EC Declaration of Conformity

Leuze electronic

the sensor people

EG-KONFORMITÄTS-ERKLÄRUNG (ORIGINAL)	EC DECLARATION OF CONFORMITY (ORIGINAL)	DECLARATION CE DE CONFORMITE (ORIGINAL)
Der Hersteller	The Manufacturer	Le constructeur
	Leuze electronic GmbH + Co. KG In der Braike 1, PO Box 1111 73277 Owen, Germany	
erklärt, dass die nachfolgend aufgeführten Produkte den einschlägigen Anforderungen der genannten EG-Richtlinien und Normen entsprechen.	declares that the following listed products fulfil the relevant provisions of the mentioned EC Directives and standards.	déclare que les produits identifiés suivants sont conformes aux directives CE et normes mentionnées.
Produktbeschreibung:	Description of product:	Description de produit:
Magnetcodierte Sensoren MC3x mit Sicherheits-Schaltgeräte MSI-MC310, MSI-MC311 Seriennummer siehe Typschild	**Magnetically Coded Sensors with MSI-MC310, MSI-MC311 Safety Relays Serial no. see name plates**	**Capteurs à codage magnétique avec relais de sécurité MSI-MC310, MSI-MC311 N° série voir plaques signalétiques**
Angewandte EG-Richtlinie(n):	Applied EC Directive(s):	Directive(s) CE appliquées:
2004/108/EG 2006/42/EG	**2004/108/EC 2006/42/EC**	**2004/108/CE 2006/42/CE**
Angewandte Normen:	Applied standards:	Normes appliquées:
EN 13849-1:2008; EN 50178:1997; EN 60204-1:2006; EN ISO 13850:2008; EN 1088:1995 + A1:2008 EN 61000-6-2:2005; EN 61000-6-3:2007; EN 60947-5-3:2005		
Benannte Stelle / Baumusterprüfbescheinigung:	Notified Body / Certificate of Type Examination:	Organisme noptifié / Attestation d'examen CE de type:
TÜV Italia srl Industrie Service Division Via Carducci, 125 ed. 23 20099 Sesto San Giovanni (MI)	/	**TÜV IT 0948 11 MAC 0026 B**
Bevollmächtigter für die Zusammenstellung der technischen Unterlagen:	Authorized person to compile the technical file:	Personne autorisée à constituer le dossier technique:
André Thieme; Leuze electronic GmbH + Co. KG, business unit safety systems Liebigstr. 4; 82256 Fuerstenfeldbruck; Germany		

Owen, 15.10.2012
Datum / Date / Date

Dr. Holger Lehmitz, Director Business Unit Safety Systems

Leuze electronic GmbH + Co. KG
In der Braike 1
D-73277 Owen
Telefon +49 (0) 7021 573-0
Telefax +49 (0) 7021 573-199
info@leuze.de
www.leuze.com

LEO-ZQM-149-01-FO

Leuze electronic GmbH + Co. KG, Sitz Owen, Registergericht Stuttgart, HRA 230712
Persönlich haftende Gesellschafterin Leuze electronic Geschäftsführungs-GmbH, Sitz Owen, Registergericht Stuttgart, HRB 230550
Geschäftsführer: Ulrich Balbach, Dr. Matthias Kirchherr
USt.-IdNr. DE 145912521 | Zollnummer 2554232

Es gelten ausschließlich unsere aktuellen Verkaufs- und Lieferbedingungen
Only our current Terms and Conditions of Sale and Delivery shall apply

Nr. 609435-2012/10