Leuze

Original operating instructions

DDLS 508

Optical Data Transmission for 100 Mbit/s Ethernet – Version F3/F4

The Sensor People

We reserve the right to make technical changes
EN • 2020-11-09 • 50133567

ПРОМЭЛЕКТРОНИКА / sales@prom-elec.com

© 2020
Leuze electronic GmbH + Co. KG
In der Braike 1
73277 Owen / Germany
Phone: +49 7021 573-0
Fax: +49 7021 573-199
www.leuze.com
info@leuze.com

1 About this document ... 5

1.1 Used symbols and signal words ... 5

2 Safety ... 6

2.1 Intended use ... 6

2.2 Foreseeable misuse ... 6

2.3 Competent persons ... 7

2.4 Disclaimer ... 7

2.5 Laser safety notices ... 7

3 Device description ... 11

3.1 Device overview ... 11
3.1.1 General information ... 11
3.1.2 Performance characteristics and delivery options ... 11
3.1.3 Protocol-specific characteristics ... 12
3.1.4 Accessories ... 13
3.1.5 Operating principle ... 13

3.2 Connection technology ... 13

3.3 Indicators and operational controls ... 14
3.3.1 Indicators and operational controls in the control panel ... 14
3.3.2 Indicators in the optics area ... 19
3.3.3 Indicators in the connection area ... 20

4 Mounting ... 21

4.1 Mounting instructions ... 21

4.2 Mounting with alignment laser and level ... 22
4.2.1 Horizontal mounting (travel axis) with the alignment laser ... 22
4.2.2 Vertical mounting (lifting axis) with the alignment laser ... 27

4.3 Mounting without alignment laser ... 29
4.3.1 Horizontal mounting (travel axis) without alignment laser ... 29
4.3.2 Vertical mounting (lifting axis) without alignment laser ... 31

4.4 Mounting tolerances of the devices ... 32

4.5 Mounting distance for parallel operation of data transmission systems ... 33

4.6 Mounting distance for parallel operation with AMS 300/AMS 200 laser measurement systems ... 35

4.7 Mounting distance for parallel operation with DDLS 200 data transmission system ... 35

4.8 Cascading (series connection) of multiple data transmission systems ... 35

5 Electrical connection ... 37

5.1 Overview ... 37

5.2 POWER (supply voltage / switching input and switching output) ... 38

5.3 BUS (bus input, Ethernet) ... 39

6 Starting up the device ... 40

6.1 Setting the operating mode ... 40

6.2 Fine adjustment ... 42
6.2.1 General procedure ... 42
6.2.2 Fine adjustment with the single-handed adjustment (SHA) process ... 42
6.2.3 Fine adjustment without the single-handed adjustment (SHA) process ... 43

7 Diagnostics and troubleshooting ... 46

7.1 Error displays of the operating state LEDs ... 46

7.2 Error displays and STATUS LED for remote diagnosis ... 49

7.3 Error displays of the operating mode LEDs ... 49

8 Care, maintenance and disposal ... 51

8.1 Cleaning ... 51

8.2 Servicing ... 51

8.3 Disposing ... 51

9 Service and support ... 52

10 Technical data ... 53

10.1 General specifications ... 53

10.1.1 Device without heater ... 53

10.1.2 Device with heating ... 55

10.2 Dimensioned drawings ... 56

10.3 Dimensional drawings: Accessories ... 58

11 Order guide and accessories ... 59

11.1 Nomenclature ... 59

11.2 Cables accessories ... 59

11.3 Other accessories ... 60

12 EC Declaration of Conformity ... 61

1 About this document

1.1 Used symbols and signal words

Tab. 1.1: Warning symbols and signal words

	Symbol indicating dangers to persons
	Symbol indicating dangers from harmful laser radiation
	Symbol indicating possible property damage
NOTE	Signal word for property damage Indicates dangers that may result in property damage if the measures for danger avoidance are not followed.
CAUTION	Signal word for minor injuries Indicates dangers that may result in minor injury if the measures for danger avoidance are not followed.
WARNING	Signal word for serious injury Indicates dangers that may result in severe or fatal injury if the measures for danger avoidance are not followed.

Tab. 1.2: Other symbols

	Symbol for tips Text passages with this symbol provide you with further information.
	Symbol for action steps Text passages with this symbol instruct you to perform actions.
	Symbol for action results Text passages with this symbol describe the result of the preceding action.

Tab. 1.3: Terms and abbreviations

DDLS	Optical transceiver for digital data transmission
EN	European standard
FE	Functional earth
IO or I/O	Input/Output
MAC address	Media Access Control address; hardware address of a device in the network
NEC	National Electric Code; safety standard for electrical installations in the U.S.A.
PELV	Protective Extra-Low Voltage; protective extra-low voltage with reliable disconnection
HBS	High-bay storage device
SHA	Single-Handed Adjustment; fine adjustment of the devices by one person
TCP/IP	Transmission Control Protocol/Internet Protocol; Internet protocol family
UDP	User Datagram Protocol; network transmission protocol
UL	Underwriters Laboratories

2 Safety

This optical data transmission system was developed, manufactured and tested in line with the applicable safety standards. It corresponds to the state of the art.

2.1 Intended use

Devices of the DDLS 500 series have been designed and developed for the optical transmission of data in the infrared range.

Areas of application

Devices of the DDLS 500 series are designed for the following areas of application:

- Data transmission between stationary and/or moving devices. The devices must – with respect to the transmission beam spread - be positioned opposite one another without interruption. A data transmission path consists of two devices designated with "Frequency F3" and "Frequency F4".
- Data transmission between two mutually opposing devices, whereby each device can rotate 360 °. The middle axes of the receiver lenses must – with respect to the transmission beam spread – be positioned opposite one another without interruption during the rotation.

  For rotary transmission, a minimum distance of 500 mm is necessary between the two devices.

NOTICE

For information about possible restrictions regarding the transmission of special protocols see chapter 3.1.2 "Performance characteristics and delivery options".

CAUTION

Observe intended use!

The protection of personnel and the device cannot be guaranteed if the device is operated in a manner not complying with its intended use.

- ↳ Only operate the device in accordance with its intended use.
- ↳ Leuze electronic GmbH + Co. KG is not liable for damages caused by improper use.
- ↳ Read these operating instructions before commissioning the device. Knowledge of the operating instructions is an element of proper use.

NOTICE

Comply with conditions and regulations!

- ↳ Observe the locally applicable legal regulations and the rules of the employer's liability insurance association.

2.2 Foreseeable misuse

Any use other than that defined under "Intended use" or which goes beyond that use is considered improper use.

In particular, use of the device is not permitted in the following cases:

- in rooms with explosive atmospheres
- for medical purposes

NOTICE

Do not modify or otherwise interfere with the device!

- ↳ Do not carry out modifications or otherwise interfere with the device. The device must not be tampered with and must not be changed in any way.
- ↳ The device must not be opened. There are no user-serviceable parts inside.
- ↳ Repairs must only be performed by Leuze electronic GmbH + Co. KG.

2.3 Competent persons

Connection, mounting, commissioning and adjustment of the device must only be carried out by competent persons.

Prerequisites for competent persons:

- They have a suitable technical education.
- They are familiar with the rules and regulations for occupational safety and safety at work.
- They are familiar with the operating instructions for the device.
- They have been instructed by the responsible person on the mounting and operation of the device.

Certified electricians

Electrical work must be carried out by a certified electrician.

Due to their technical training, knowledge and experience as well as their familiarity with relevant standards and regulations, certified electricians are able to perform work on electrical systems and independently detect possible dangers.

In Germany, certified electricians must fulfill the requirements of accident-prevention regulations DGUV (German Social Accident Insurance) provision 3 (e.g. electrician foreman). In other countries, there are respective regulations that must be observed.

2.4 Disclaimer

Leuze electronic GmbH + Co. KG is not liable in the following cases:

- The device is not being used properly.
- Reasonably foreseeable misuse is not taken into account.
- Mounting and electrical connection are not properly performed.
- Changes (e.g., constructional) are made to the device.

2.5 Laser safety notices

Laser diode of the transmitter – laser class 1M

	⚠ ATTENTION
	INVISIBLE LASER RADIATION – CLASS 1M LASER PRODUCT **Do not expose users of telescopic optics!** The device satisfies the requirements of IEC/EN 60825-1:2014 safety regulations for a product of **laser class 1M** and complies with 21 CFR 1040.10 except for conformance with IEC 60825-1 Ed. 3., as described in Laser Notice No. 56, dated May 8, 2019. ↳ Looking into the beam path for extended periods using telescope optics may damage the eye's retina. Never look using telescope optics into the laser beam or in the direction of reflecting beams. ↳ CAUTION! Use of controls or adjustments or performance of procedures other than specified herein may result in hazardous light exposure. The use of optical instruments or devices (e.g., magnifying glasses, binoculars) with the product will increase eye danger. ↳ Observe the applicable statutory and local laser protection regulations. ↳ The device must not be tampered with and must not be changed in any way. There are no user-serviceable parts inside the device. Repairs must only be performed by Leuze electronic GmbH + Co. KG.

The device emits invisible laser radiation with a wavelength of 785 nm (device with designation "Frequency F3") or 852 nm (device with designation "Frequency F4") through the laser aperture of the optical window. The beam spread of the beam cone is ≤ 1° (± 0.5°).

The power density distribution in the light spot is homogeneous; there is no elevation of power density in the center of the light spot. The average emitted laser power of the device is < 12 mW. For transmission of the data, the emitted laser radiation is amplitude modulated (on-off keying). Pulses and pulse pauses of the emitted laser light are between 8 ns and 32 ns long. The laser power emitted during the pulses is < 24 mW.

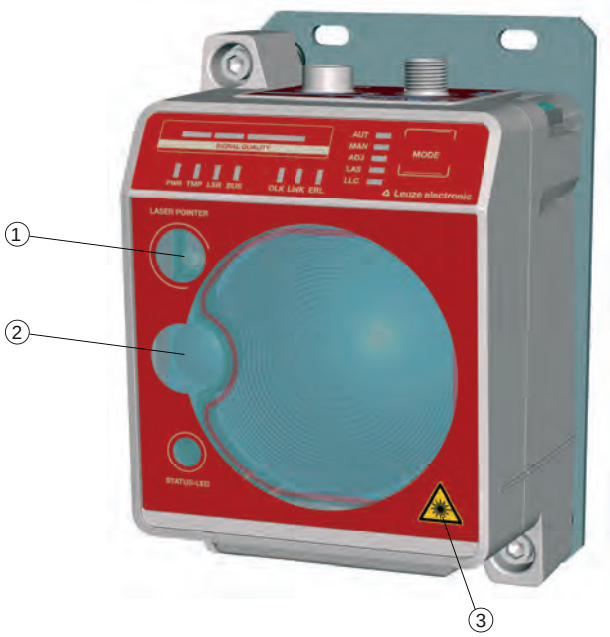

1 Laser aperture – alignment laser
2 Laser aperture – transmitter
3 Laser warning sign

Fig. 2.1: Laser apertures

UNSICHTBARE LASERSTRAHLUNG
Nicht direkt mit Teleskopoptiken betrachten!
Max. Leistung (peak): < 36 mW
Impulsdauer: 32 ns
Wellenlänge: 785 nm
LASER KLASSE 1M
EN 60825-1:2014

RADIAZIONE LASER INVISIBILE
Non guardare direttamente con ottiche telescopiche!
Potenza max. (peak): < 36 mW
Durata dell'impulso: 32 ns
Lunghezza d'onda: 785 nm
APARRECCHIO LASER DI CLASSE 1M
EN 60825-1:2014

INVISIBLE LASER RADIATION
Do not expose users of telescopic optics!
Maximum Output (peak): < 36 mW
Pulse duration: 32 ns
Wavelength: 785 nm
CLASS 1M LASER PRODUCT
EN 60825-1:2014

RAYONNEMENT LASER INVISIBLE
Ne pas regarder directement avec des optiques télescopiques !
Puissance max. (crête): < 36 mW
Durée d`impulse: 32 ns
Longueur d`ande émis: 785 nm
APPAREIL À LASER DE CLASSE 1M
EN 60825-1:2014

RADIACIÓN LÁSER INVISIBLE
¡No mirar directamente con ópticas telescópicas!
Potencia máx. (peak): < 36 mW
Duración del impulso: 32 ns
Longitud de onda: 785 nm
PRODUCTO LÁSER DE CLASE 1M
EN 60825-1:2014

RADIACAO LASER INVISIVEL
Não olhe diretamente para as óticas telescópicas!
Potência máx. (peak): < 36 mW
Período de pulso: 32 ns
Comprimento de onda: 785 nm
EQUIPAMENTO LASER CLASSE 1M
EN 60825-1:2014

INVISIBLE LASER RADIATION
Do not expose users of telescopic optics!
Maximum Output (avg): < 36 mW
Pulse duration: 32 ns
Wavelength: 785 nm
CLASS 1M LASER PRODUCT
IEC 60825-1:2014
Complies with 21 CFR 1040.10

小心肉眼看不到的激光射线
禁止通过望远镜观看 !
最大输出 (峰值) : < 36 mW
脉冲持续时间: 32 ns
波长: 785 nm
1M 类激光产品
IEC 60825-1:2014

Fig. 2.2: Laser information signs for devices with frequency F3

UNSICHTBARE LASERSTRAHLUNG
Nicht direkt mit Teleskopoptiken betrachten!
Max. Leistung (peak): < 36 mW
Impulsdauer: 32 ns
Wellenlänge: 852 nm
LASER KLASSE 1M
EN 60825-1:2014

RADIAZIONE LASER INVISIBILE
Non guardare direttamente con ottiche telescopiche!
Potenza max. (peak): < 36 mW
Durata dell'impulso: 32 ns
Lunghezza d'onda: 852 nm
APARRECCHIO LASER DI CLASSE 1M
EN 60825-1:2014

INVISIBLE LASER RADIATION
Do not expose users of telescopic optics!
Maximum Output (peak): < 36 mW
Pulse duration: 32 ns
Wavelength: 852 nm
CLASS 1M LASER PRODUCT
EN 60825-1:2014

RAYONNEMENT LASER INVISIBLE
Ne pas regarder directement avec des optiques télescopiques !
Puissance max. (crête): < 36 mW
Durée d`impulse: 32 ns
Longueur d`ande émis: 852 nm
APPAREIL À LASER DE CLASSE 1M
EN 60825-1:2014

RADIACIÓN LÁSER INVISIBLE
¡No mirar directamente con ópticas telescópicas!
Potencia máx. (peak): < 36 mW
Duración del impulso: 32 ns
Longitud de onda: 852 nm
PRODUCTO LÁSER DE CLASE 1M
EN 60825-1:2014

RADIACAO LASER INVISIVEL
Não olhe diretamente para as óticas telescópicas!
Potência máx. (peak): < 36 mW
Período de pulso: 32 ns
Comprimento de onda: 852 nm
EQUIPAMENTO LASER CLASSE 1M
EN 60825-1:2014

INVISIBLE LASER RADIATION
Do not expose users of telescopic optics!
Maximum Output (avg): < 36 mW
Pulse duration: 32 ns
Wavelength: 852 nm
CLASS 1M LASER PRODUCT
IEC 60825-1:2014
Complies with 21 CFR 1040.10

小心肉眼看不到的激光射线
禁止通过望远镜观看 !
最大输出（峰值）: < 36 mW
脉冲持续时间: 32 ns
波长: 852 nm
1M 类激光产品
IEC 60825-1:2014

Fig. 2.3: Laser information signs for devices with frequency F4

Alignment laser (optional) – laser class 1

ATTENTION

LASER RADIATION – CLASS 1 LASER PRODUCT

The device satisfies the requirements of IEC/EN 60825-1:2014 safety regulations for a product of **laser class 1** and complies with 21 CFR 1040.10 and 1040.11 except for conformance with IEC 60825-1 Ed. 3., as described in Laser Notice No. 56, dated May 8, 2019.

CAUTION: Opening the device can lead to dangerous exposure to radiation.

- Observe the applicable statutory and local laser protection regulations.
- The device must not be tampered with and must not be changed in any way.
  There are no user-serviceable parts inside the device.
  Repairs must only be performed by Leuze electronic GmbH + Co. KG.

NOTICE

Devices with integrated alignment laser can be identified by part number code L in the part designation, e.g., DDLS 5xx XXX.4 L.

Laser class 1M also applies for devices with integrated alignment laser.

3 Device description

3.1 Device overview

3.1.1 General information

The DDLS 508 optical data transmission system transmits Ethernet network data on the basis of TCP/IP or UDP transparently and without contact or wear via infrared light.

A MAC address or IP address configuration is not necessary.

A transmission path consists of two mutually opposing devices.

- One device is designated with "Frequency F3", the other with "Frequency F4".
- The devices can also be assigned via part number code DDLS 5XX … **3** … and DDLS 5XX … **4** ….

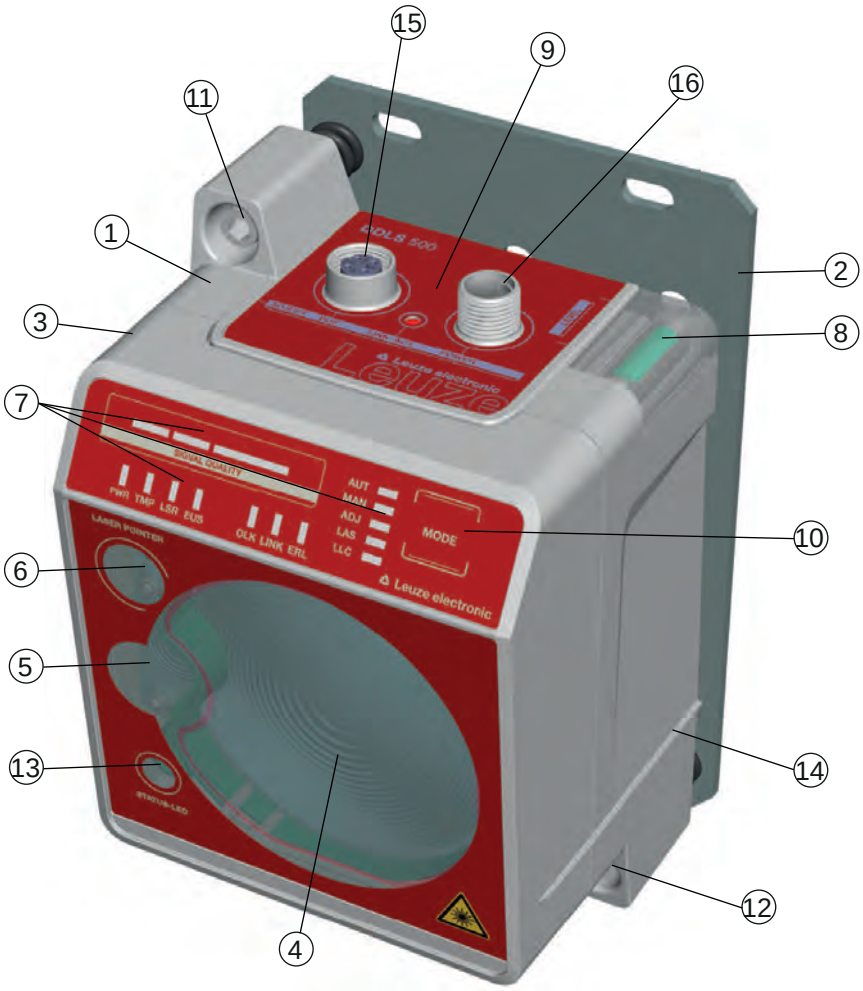

1	Device housing	9	Connection area
2	Mounting plate	10	Operating mode selector switch
3	Planar surface for supporting a bubble level or alignment straightedge	11	Alignment screw for vertical alignment
4	Receiver optics	12	Alignment screw for horizontal alignment
5	Transmitter optics	13	STATUS LED for remote diagnosis
6	Alignment laser for mounting support (optional)	14	Supporting edge for bubble level or alignment straight-edge
7	LED indicators in the control panel	15	Ethernet connection, M12
8	Spirit level (for devices with alignment laser)	16	POWER connection, M12

Fig. 3.1: Device construction

3.1.2 Performance characteristics and delivery options

- Data transmission over a range of up to 200 m

- Optional alignment laser including spirit level for mounting support
- Planar surfaces on top and side for supporting a level or alignment straightedge
- Single-handed adjustment (SHA) for aligning the devices by one person
- Optional variants with integrated heating for operating temperatures below -5 °C
  Use to -35 °C
- Transmission optics with larger beam spread on request

3.1.3 Protocol-specific characteristics

Protocol-independent data transmission of all TCP/IP and UDP protocols, e.g.

- PROFINET RT
- EthernetIP (Rockwell)
- … and more

Transmission of safety protocols

The DDLS 508 is suitable for transmitting the following safety protocols:

- PROFIsafe over PROFINET

	NOTICE
	The DDLS 508 is not suitable for transmitting the following protocols: - PROFINET IRT - EtherCAT * - Safety-over-EtherCAT (FSoE) * * For the EtherCAT and FsoE protocols, the DDLS 538 optical data transmission is to be used.

	NOTICE
	Connection interruption of the optical data transmission The following causes result in a connection interruption of the optical data transmission: - The interruption of the optical link (light beam interruption) - Excess glare on the receiver optics from external ambient light - Light from other optical sensors shining onto the the receiver optics with a wavelength of approx. 785 nm or 852 nm - The shutting off of the voltage supply on the DDLS 508 - The interruption of the copper LAN connection from and to the optical data transceiver - Device defects A connection interruption, especially with respect to safety protocols, must be taken into account in the safety concept of the system by the system manufacturer. The system must be brought to a safe state by the system manufacturer. While doing so, people must not be exposed to a danger at any time. The system manufacturer is responsible for safely bringing the system to a standstill. If the causes of a connection interruption on the DDLS 508 mentioned above are rectified, it will reestablish the optical data transmission without any further acknowledgment measures. If special measures must be taken to restart the system after correcting the interruption of data transmission, these are to be defined by the system manufacturer and implemented in the system's safety concept.

	NOTICE
	The PROFINET IRT protocol is a special case. The DDLS 508 cannot satisfy the specifications of the transmission criteria for PROFINET IRT. ↳ For details on the delay times or the jitter-relevant device data, see chapter 4.8 "Cascading (series connection) of multiple data transmission systems".

NOTICE	
	The decision as to whether the DDLS 508 can be used for other protocols that do not correspond to the protocol and transmission characteristics described above lies with the user. Leuze electronic GmbH + Co. KG cannot accept any liability for any transmission problems that occur which are attributable to the above-mentioned causes.

3.1.4 Accessories

For exact details and order information, see chapter 11 "Order guide and accessories".

- Adapter plate for installing instead of a DDLS 200
- Ready-made cable for M12 connections
- Customizable connector plug

3.1.5 Operating principle

A pair of devices is necessary for establishing a data transmission path. To prevent the devices from mutually interfering with one another during data transmission, they use different frequencies.

- one device with frequency F3

  Part designation: DDLS 5XX xxx.3 YY

  Designation on the name plate: Frequency F3
- one device with frequency F4

  Part designation: DDLS 5XX xxx.4 YY

  Designation on the name plate: Frequency F4

NOTICE	
	Installation for devices with an operating range of 200 m. ↳ Always install the **Frequency F4** device as **stationary device** for devices with an operating range of 200 m (DDLS 5XX **200**…).

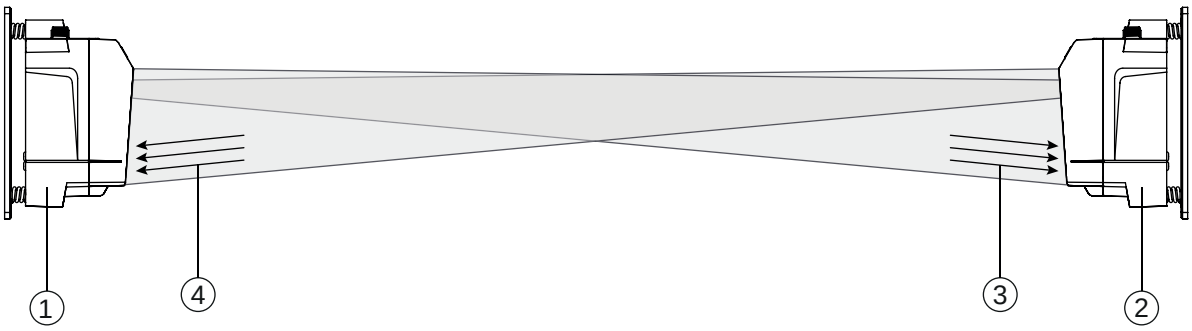

1 Device with frequency F3 (DDLS 5XX xxx.3 YY)
2 Device with frequency F4 (DDLS 5XX xxx.4 YY)
3 Frequency F3
4 Frequency F4

Fig. 3.2: Optical data transmission on two frequencies

The received signal level (SIGNAL QUALITY) is measured on both devices. If the received signal level drops below a certain value (SIGNAL QUALITY indicator shows only red and orange), the intensity warning is activated.

The intensity warning is applied on switching output IO1 of the POWER connection.

3.2 Connection technology

A-coded, M12 connection for the supply voltage with integrated switching input and output.

D-coded, M12 connection for the Ethernet connection.

3.3 Indicators and operational controls

3.3.1 Indicators and operational controls in the control panel

Operating mode selector switch and operating mode indicator

- Operating mode selector switch [MODE]

  The operating mode selector switch is used to switch between the operating modes of the device (see chapter 6 "Starting up the device").

- Operating mode LEDs AUT, MAN, ADJ, LAS, LLC

  The operating mode LEDs indicate the active operating mode.

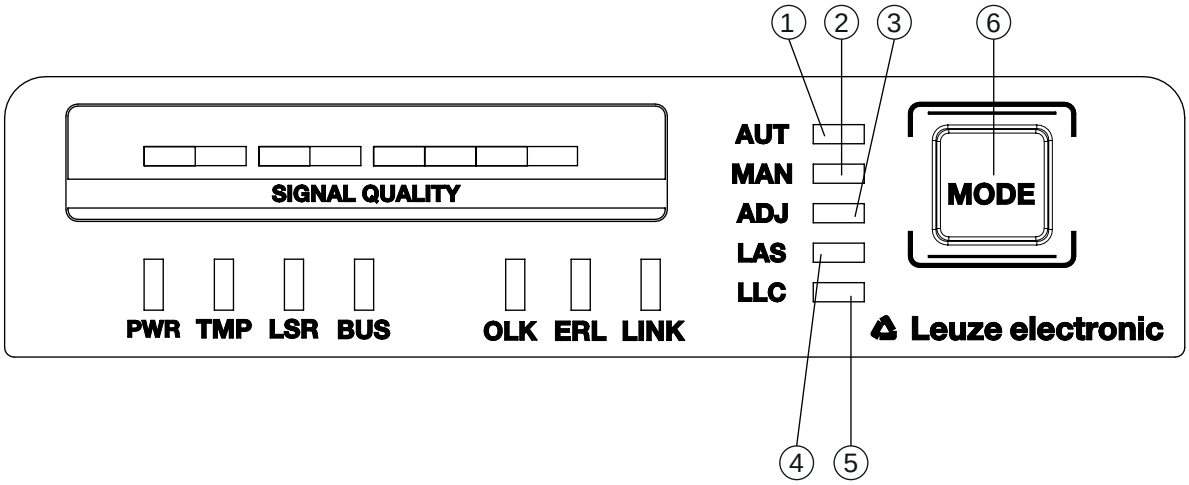

1 AUT – Automatic
2 MAN – Manual
3 ADJ – Adjust
4 LAS – Alignment laser for mounting support
5 LLC – Link Loss Counter
6 MODE – Operating mode selector switch

Fig. 3.3: Operating mode LEDs and operating mode selector switch

Tab. 3.1: Meaning of the operating mode indicators

LED	Color	State	Description
AUT	Green	Continuous light	AUT operating mode (Automatic) active Standard operating mode for data transmission **Note:** The optical link remains activated until the last orange LED in the SIGNAL QUALITY indicator switches off.
MAN	Green	Continuous light	MAN operating mode (Manual) active Operating mode for fine adjustment of the devices via SHA (see chapter 6.2.2 "Fine adjustment with the single-handed adjustment (SHA) process"). **Note**: The optical link remains activated until the last green LED in the SIGNAL QUALITY indicator switches off.

LED	Color	State	Description
ADJ	Green	Continuous light	ADJ operating mode (Adjust) active Operating mode for fine adjustment of the devices via SHA (see chapter 6.2.2 "Fine adjustment with the single-handed adjustment (SHA) process"). **Note**: • Data transmission to the connected participants is de-activated. • The optical link remains activated until the last orange LED in the SIGNAL QUALITY indicator switches off. • The received signal level (SIGNAL QUALITY) of the second device is transmitted to the SIGNAL QUALITY indicator of the first device.
LAS	Green	Continuous light	LAS operating mode (Laser Adjustment System) active The alignment laser mounting support is activated (see chapter 4.2 "Mounting with alignment laser and level").
LLC	---	OFF	LLC operating mode (Link Loss Counter, interruption diag-nostics) not activated.
	Green	Continuous light	The optical link was interruption-free since activation of the LLC.
	Red	Continuous light	The optical link was interrupted at least once since activa-tion of the LLC (see chapter 7.3 "Error displays of the oper-ating mode LEDs").

Operating state indicator

The PWR, TMP, LSR, OLK, ERL and LINK LEDs indicate the operating state of the device.

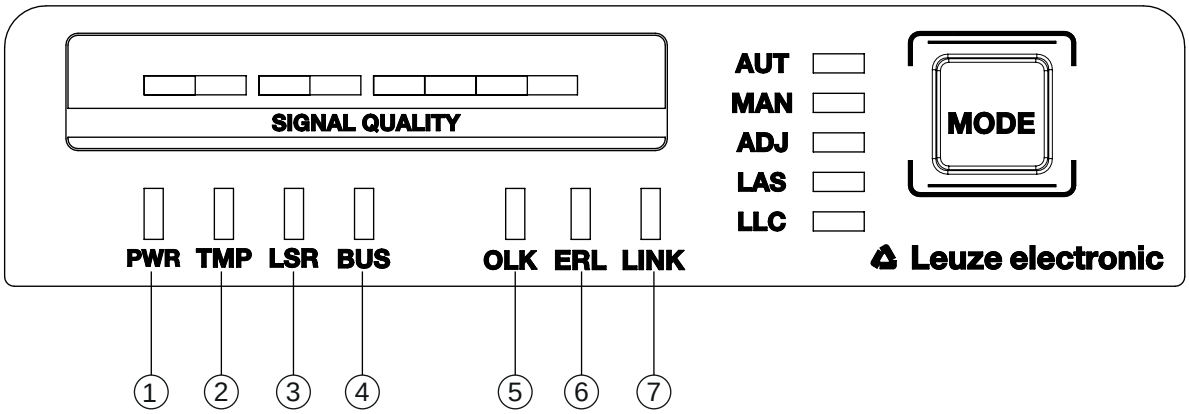

1 PWR – Supply voltage (Power)
2 TMP – Temperature warning/error
3 LSR – Laser prefailure message
4 BUS – Not active for DDLS 508
5 OLK – Optical link
6 ERL – Error Link
7 LINK – M12 cable-connected link

Fig. 3.4: Operating state LEDs in the control panel

Tab. 3.2: Meaning of the operating state indicators

LED	Color	State	Description
PWR	---	OFF	No supply voltage (see chapter 7.1 "Error displays of the operating state LEDs")
	Green	Flashing	Device is being initialized • Supply voltage connected • Initialization running • No data sent or received
	Green	Continuous light	Data transmission path ready • Initialization finished
	Red	Flashing	Warning set (see chapter 7.1 "Error displays of the operating state LEDs") • No green and orange LEDs in SIGNAL QUALITY indicator • The optical link is interrupted. • The laser diode of the transmitter is defective.
	Red	Continuous light	Device error (see chapter 7.1 "Error displays of the operating state LEDs" • The function of the device is limited. The displays of the other operating state LEDs may provide information on the cause of the error.
TMP	---	OFF	Operating temperature in the specified working range
	Orange	Continuous light	• Warning: The operating temperature is above or below the specified working range by a maximum of 5 °C (see chapter 7.1 "Error displays of the operating state LEDs"). • Data transmission remains active.
	Red	Continuous light	• The operating temperature is above or below the specified working range by more than 5 °C (see chapter 7.1 "Error displays of the operating state LEDs"). • The operating time outside of the permissible operating temperature is detected by the device. • Data transmission remains active.
LSR	---	OFF	Laser diode of the transmitter with sufficient function reserve.
	Orange	Continuous light	• Warning: The laser diode of the transmitter signals the imminent end of the life expectancy (see chapter 7.1 "Error displays of the operating state LEDs"). Limits to the maximum data transmission distance may occur. • Data transmission remains active.
	Orange	Flashing	• Laser monitoring has detected an excessively high laser transmitting current. • The transmitter was deactivated.
BUS	Not active for the DDLS 508		

LED	Color	State	Description
OLK	---	OFF	No optical data connection No data transmission Causes (see chapter 7.1 "Error displays of the operating state LEDs"): • Optical window soiled • Insufficient alignment • Range exceeded • Environmental influences (snow, rain, fog) • Wrong F3/F4 frequency assignment of the devices • Transmitter deactivated • Transmitter of the second device deactivated
	Green	Continuous light	• The optical link exists. • No data is sent or received.
	Orange	Continuous light/ flickering light	Data is sent and received.
ERL	---	OFF	No link error.
	Orange	Continuous light	• Missing link (Ethernet cable connection) on the second device (see chapter 7.1 "Error displays of the operating state LEDs"). • SIGNAL QUALITY indicator on the second device without green and orange LED (see chapter 7.1 "Error displays of the operating state LEDs").
	Red	Continuous light	• No cable-connected link to the connected device (see chapter 7.1 "Error displays of the operating state LEDs"). • SIGNAL QUALITY indicator without green and orange LED (see chapter 7.1 "Error displays of the operating state LEDs").
LINK	---	OFF	No cable-connected link to the connected device (see chapter 7.1 "Error displays of the operating state LEDs").
	Green	Continuous light	• The link to the connected device is OK. • No data is sent or received.
	Orange	Continuous light/ flickering light	• The link to the connected device is active. • Data is sent and received.

SIGNAL QUALITY indicator

Eight individual LEDs are available for displaying the received signal level (SIGNAL QUALITY):

- two red LEDs
- two orange LEDs
- four green LEDs

At the optimum received signal level, all LEDs (red, orange, green) are activated.

If the received signal level drops, the LEDs are successively switched off, beginning with the green LEDs.

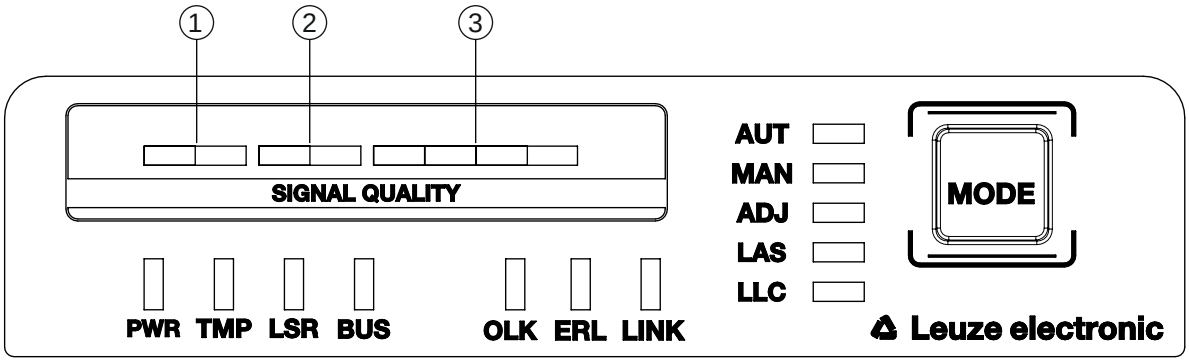

1 two red LEDs
2 two orange LEDs
3 four green LEDs

Fig. 3.5: SIGNAL QUALITY indicator of the received signal level

Tab. 3.3: Meaning of the SIGNAL QUALITY indicators

LED	Color	State	Description
SIGNAL QUALITY	Green	Continuous light 4-stage	• Received signal level with function reserve. • The optical link exists.
	Orange	Continuous light 2-stage	Warning: Received signal level with minimal function reserve (see chapter 7 "Diagnostics and troubleshooting"). • The optical link exists. AUT operating mode (Automatic): Data transmission is active. MAN (Manual), ADJ (Adjust) operating modes: Data transmission is deactivated. • Switching output IO1 of the POWER connection is activated in operating modes AUT (Automatic), MAN (Manual) and ADJ (Adjust). Causes: • Optical window soiled • Range exceeded • Environmental influences (snow, rain, fog) • Insufficient alignment
	Red	Continuous light 2-stage	The optical link is interrupted. The received signal level is not sufficient (see chapter 7 "Diagnostics and troubleshooting"). • No data is sent or received. • Switching output IO1 of the POWER connection is activated. Causes: • Optical window soiled • Range exceeded • Environmental influences (snow, rain, fog) • Insufficient alignment of the devices • Wrong F3/F4 frequency assignment of the devices • Transmitter of the second device deactivated

3.3.2 Indicators in the optics area

For simple, quick diagnosis, the device is equipped with a STATUS LED in the optics area.

The STATUS LED enables a quick summary diagnosis of the operating state of the device.

- The STATUS LED summarizes the displays of the individual LEDs of the control panel in a single indicator.
- The STATUS LED illuminates very brightly and can also be seen from a relatively long distance.

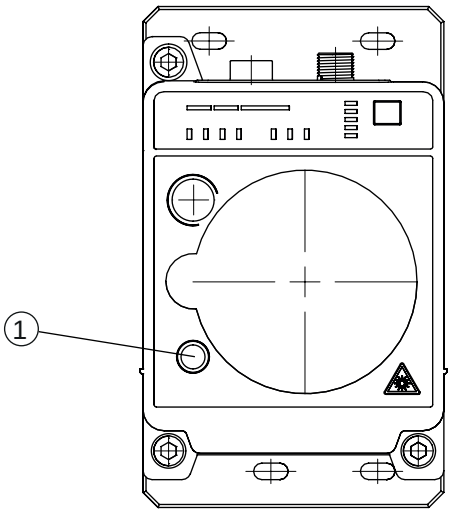

1 STATUS LED

Fig. 3.6: STATUS LED in the optics area

Tab. 3.4: Meaning of the STATUS LED display

LED	Color	State	Description
STATUS LED	Green	Continuous light	Not a warning or error message.
	Green	Flashing	There is/are warning message(s) (see chapter 7.2 "Error displays and STATUS LED for remote diagnosis"): • SIGNAL QUALITY indicator without green LED in operating modes AUT (Automatic), MAN (Manual), ADJ (Adjust) • Temperature, warning or error (TMP) • Laser pre-failure (LSR) • Link Loss Counter has triggered (LLC) Data transmission is active.
	---	OFF	• No supply voltage. • SIGNAL QUALITY indicator shows only red LEDs. • The LINK and LINK/ACT LEDs are off. • The transmitter is deactivated (see chapter 7.2 "Error displays and STATUS LED for remote diagnosis").

3.3.3 Indicators in the connection area

For the status display of the Ethernet connection, the device is equipped with a split, two-colored LINK/ACT LED in the connection area.

The LINK/ACT LED indicates the same state as the LINK LED in the control panel.

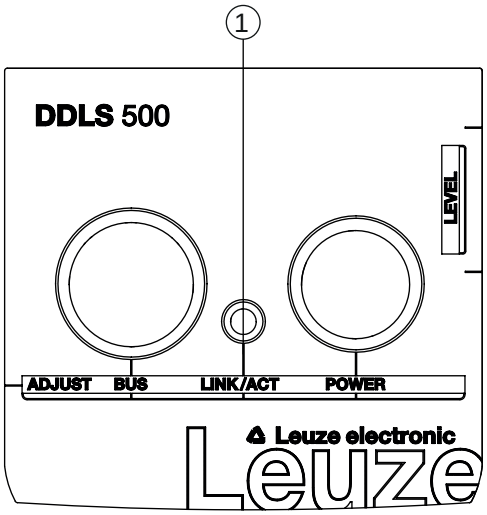

1 LED, Ethernet (split, two-colored) LINK/ACT

Fig. 3.7: LINK/ACT LED in the connection area

Tab. 3.5: Meaning of the LINK/ACT displays

LED	Color	State	Description
LINK/ACT	---	OFF	No cable-connected link to the connected device (see chapter 7.1 "Error displays of the operating state LEDs").
	Green	Continuous light	• The link to the connected device is OK. • No data is sent or received.
	Orange	Continuous light/ flickering light	• The link to the connected device is active. • Data is sent and received.

4 Mounting

The optical data transmission systems of series DDLS 500 support simple and quick basic assembly of both mutually opposing devices.

- An optical data transmission system, consisting of two devices, involves mounting each of the devices on mutually opposing, plane-parallel, flat and usually vertical walls with unobstructed view of the opposing device.
- For installation with an integrated laser pointer (optional) see chapter 4.2 "Mounting with alignment laser and level".
- For installation without the optional laser pointer see chapter 4.3 "Mounting without alignment laser".

NOTICE

Interruption of data transmission!

Data transmission is interrupted if the beam spread of the transmitters is no longer sufficient for maintaining the optical link.

- ↳ Make certain that data transmission is not interrupted, e.g., by jolts, vibrations or inclination, while moving a mobile device due to irregularities in the floor or path.
- ↳ For mobile arrangement of a device, ensure good tracking stability.

4.1 Mounting instructions

NOTICE

Select the mounting location!

- ↳ Make certain that the required environmental conditions (humidity, temperature) are maintained.
- ↳ For low ambient temperatures, e.g., in cold stores, use data transmission systems with integrated heating.
- ↳ Avoid rapid temperature changes at the data transmission system to prevent condensation.
- ↳ Protect the data transmission system from direct sunlight.
- ↳ For parallel mounting of data transmission systems and other optical measurement systems, make certain that the minimum distance between the systems is maintained (see chapter 4.5 "Mounting distance for parallel operation of data transmission systems", see chapter 4.6 "Mounting distance for parallel operation with AMS 300/AMS 200 laser measurement systems", see chapter 4.7 "Mounting distance for parallel operation with DDLS 200 data transmission system").

NOTICE

Installation for devices with an operating range of 200 m.

- ↳ Always install the **Frequency F4** device as **stationary device** for devices with an operating range of 200 m (DDLS 5XX **200**…).

NOTICE

You will achieve greater flexibility during basic installation and fine adjustment if you mount the devices on C profile rails.

NOTICE

If the device is mounted instead of a DDLS 200, use the adapter plate – to be ordered separately – if necessary (see chapter 11.3 "Other accessories").

4.2 Mounting with alignment laser and level

The optional alignment laser simplifies mounting of the mutually opposing devices.

- The alignment laser consists of an integrated laser with special beam optics. In addition, a level is integrated in devices with alignment laser.
- Alignment laser, level, transmission optics and installation in a device housing form an axially parallel unit.
- The laser spot of the alignment laser shows the installation position of the mutually opposing device.

4.2.1 Horizontal mounting (travel axis) with the alignment laser

A drilling template is included with the packaging.

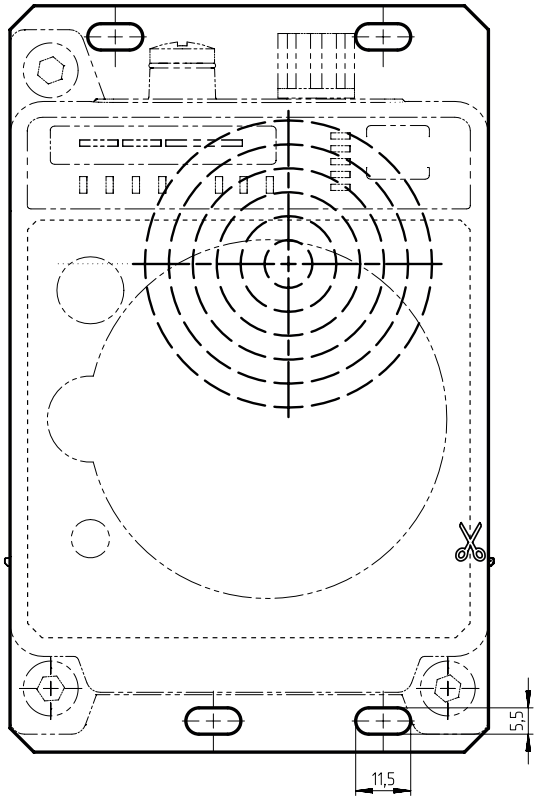

all dimensions in mm

Fig. 4.1: Drilling template

	NOTICE
	When performed using the drilling template, the described mounting procedure results in a set-up with the housings of the devices offset relative to one another (see figure). The transmitted beam of one device is thereby aligned with the center of the receiver optics of the mutually opposing device.

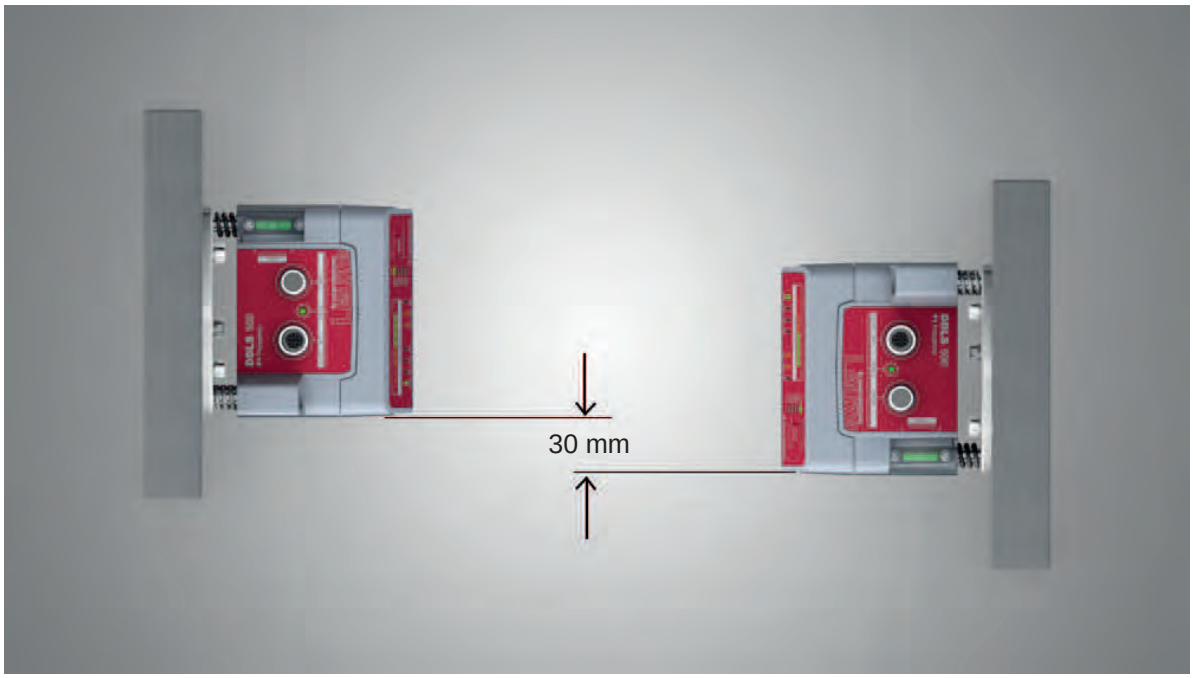

Fig. 4.2: Mounting with offset housings

Overview:

- The alignment laser projects a target spot on the opposing side.

  In addition to the target spot, the beam optics produce four individual laser spots that are projected on the floor.
- The device is aligned vertically and horizontally with two alignment screws using the integrated level and the laser spots that are projected on the floor.
- The second device is mounted on the horizontally opposing target spot with the aid of the supplied drilling template.

↳ Depending on mechanical conditions, mount the stationary or mobile device with four M5 screws via the fastening holes in the mounting plate of the device.

  ⇨ Check the vertical mounting with a separate level.

  ⇨ Place the level on the edge of the mounting plate.

↳ Connect the device electrically (see chapter 5 "Electrical connection"). The AUT LED (continuous light) indicates that the start-up phase of the device after "POWER on" has been concluded.

  ⇨ After the start-up phase, the operating mode can be changed.

↳ Switch on the alignment laser. Activate the LAS (Alignment laser) operating mode to switch on the alignment laser (see chapter 6.1 "Setting the operating mode").

	NOTICE
	Data transmission is active while changing the operating mode and with activated alignment laser.

The alignment laser projects four spots along a straight line on the floor and a target spot on the opposing wall.

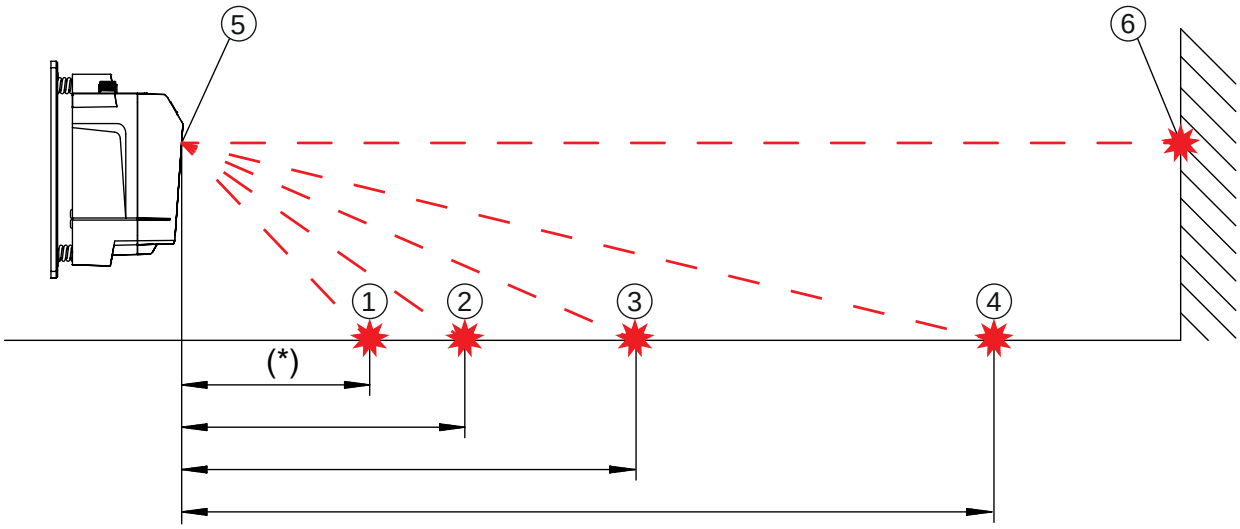

1 Laser spot 1
(*) not present for 200 m device models
2 Laser spot 2
3 Laser spot 3
4 Laser spot 4
5 Alignment laser
6 Target spot

Fig. 4.3: Alignment laser

The distance of the laser spots is dependent on the mounting height of the device. The values in the table will help you find the laser spots on the floor.

For marking and for better visibility of the laser spots on the floor, four self-adhesive labels are included in the package.

NOTICE

The integrated alignment laser, the level, as well as the device transmitter are optimally matched to one another ex works. Minimal mechanical tolerances are, however, unavoidable and generate a very small error angle. The use of the alignment laser is therefore limited to a maximum distance between the devices.

- In the table, you can find information on the distance to which the alignment laser can be used as a function of the mounting height of the device.
- Note that only three laser spots on the floor are available for device models with 200 m operating range. This does not affect the alignment capability.

Tab. 4.1: Distance of laser spots

Mounting height of the device	Distance of laser spots on floor				Alignment laser Usable to
	Laser spot 1	Laser spot 2	Laser spot 3	Laser spot 4	
3.0 m	6.7 m	9.2 m	14.1 m	28.5 m	44 m
2.5 m	5.6 m	7.7 m	11.8 m	23.8 m	40 m
2.0 m	4.5 m	6.2 m	9.4 m	19.0 m	37 m
1.5 m	3.4 m	4.6 m	7.1 m	14.3 m	32 m
1.0 m	2.2 m	3.1 m	4.7 m	9.5 m	25 m
0.5 m	1.1 m	1.5 m	2.4 m	4.8 m	16 m

Note:

The listed mounting heights of the device are examples. The device can be mounted at any desired height. The distances of the laser spots on the floor change according to the selected mounting height.

Horizontal alignment

↳ Align the laser spots using the alignment screw (8) at the lower right.

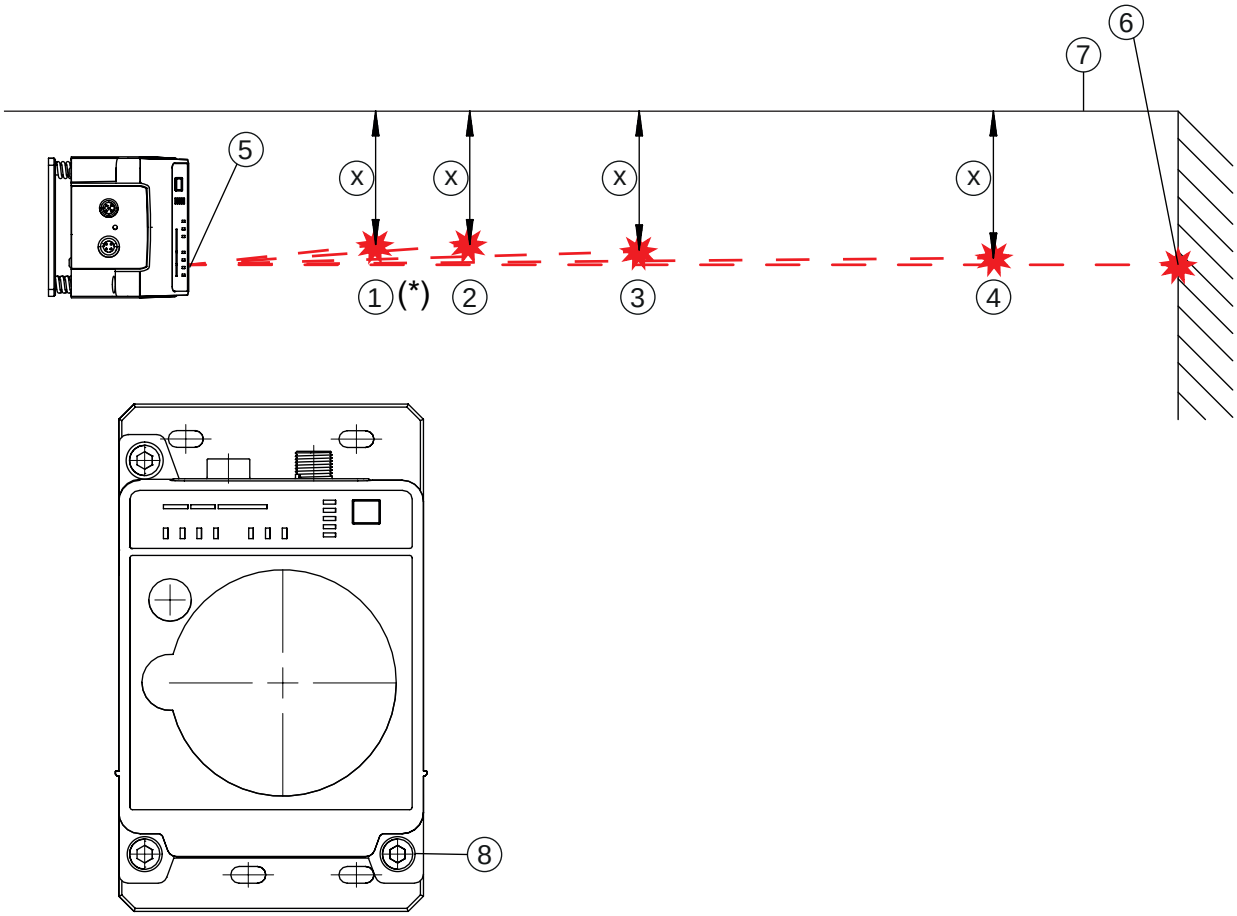

1 Laser spot 1
(*) not present for 200 m device models
2 Laser spot 2
3 Laser spot 3
4 Laser spot 4
5 Alignment laser
6 Target spot
7 Reference edge
8 Alignment screw for horizontal alignment

Fig. 4.4: Horizontal alignment of the target spot

↳ Turn the alignment screw (8) until at least two laser spots (1 - 4) are the same distance (X) to the guide rail or to a reference edge (7) that is parallel to the guide rail.

⇨ If possible, use laser spot 1 and laser spot 3 for alignment.

⇨ Set the distances of the laser spots to the reference edge exactly to 1 mm.

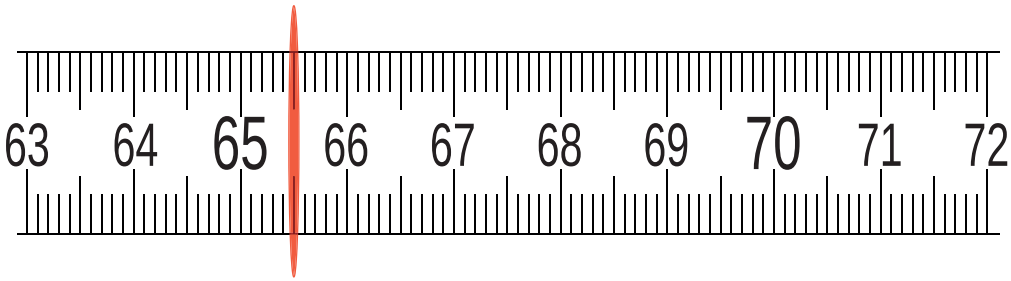

Fig. 4.5: Measure distance from laser spot to reference edge

Vertical alignment

- Adjust the vertical setting of the device using the alignment screw (2) at the upper left. Turn the alignment screw until the air bubble in the level is centered between the limit marks.

	NOTICE
	Small changes to the alignment screw cause the air bubble in the level to move slowly. Before making further settings, wait until the air bubble stops moving.

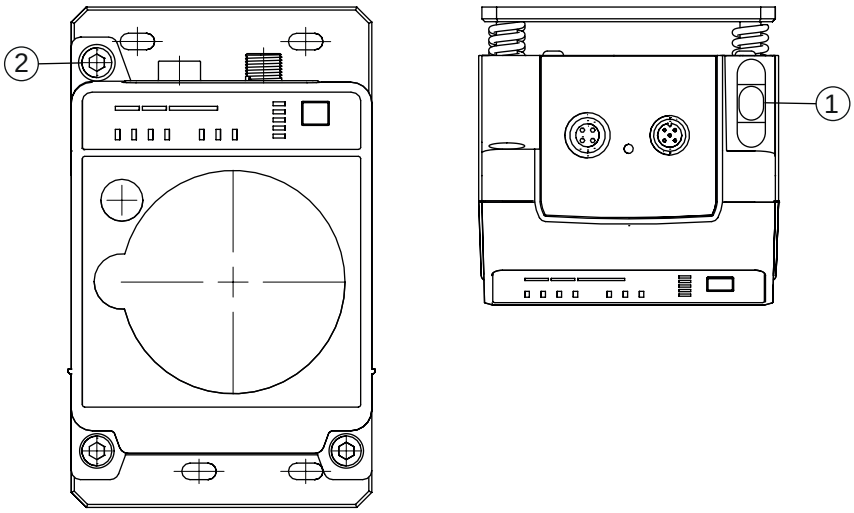

1 Spirit level
2 Alignment screw for vertical alignment

Fig. 4.6: Vertical alignment of the target spot

The target spot of the alignment laser on the opposing wall exactly marks the position at which the second device must be mounted.

Mounting the second device

- Affix the drilling template at the target spot of the alignment laser. Use the supplied self-adhesive labels.
- Drill the holes for mounting the device with the aid of the drilling template or, if C profile rails are present, align them according to the drilling template. Mount the device with four M5 screws via the fastening holes in the mounting plate.
  - ⇨ The device must be mounted in a vertical position.
  - ⇨ Check the vertical mounting with a separate level. Place the level on the edge of the mounting plate.
- Switch off the alignment laser of the device that was mounted first. Activate the AUT (Automatic) operating mode to switch off the alignment laser (see chapter 6.1 "Setting the operating mode").
- Detach the contour of the optical window from the drilling template along the perforation. Affix the removed drilling template to the optical window of the device that was mounted first using the supplied self-adhesive labels.

- Connect the second device electrically (see chapter 5 "Electrical connection").
  - ⇨ The AUT LED (continuous light) indicates that the start-up phase of the device after "POWER on" has been concluded.
  - ⇨ After the start-up phase, the operating mode can be changed.
- Switch on the alignment laser of the second device. Activate the LAS (Alignment laser) operating mode to switch on the alignment laser (see chapter 6.1 "Setting the operating mode").
- Point the alignment laser of the device that was mounted second at the drilling template on the device that was mounted first. To do this, align the second device using the alignment screws.
  - ⇨ The level as well as the parallelism of the laser spots to the guide rail does not need to be taken into account here.

	NOTICE
	Do not change the mounting position of the device that was mounted first! ↳ When aligning the second device, note that the mounting position of the device that was mounted first must not be changed.

- Switch off the alignment laser of the second device. Activate the AUT (Automatic) operating mode to switch off the alignment laser (see chapter 6.1 "Setting the operating mode").
- Remove the drilling template from the device that was mounted first.
- ⇨ This concludes the mounting of the devices in the travel axis.

Further procedure:

- Perform the fine adjustment for the travel axis (see chapter 6.2 "Fine adjustment").

4.2.2 Vertical mounting (lifting axis) with the alignment laser

	NOTICE
	Vertical mounting only with the target spot of the alignment laser! For the vertical mounting of the devices, only the target spot of the alignment laser is used (see chapter 4.2.1 "Horizontal mounting (travel axis) with the alignment laser"). ↳ The level and laser spots 1 … 4 cannot be used.

- Mount the two devices opposite one another with a lateral offset of 30 mm. Mount the devices so that the center of the transmitter of one device is opposite the center of the receiver of the other device.

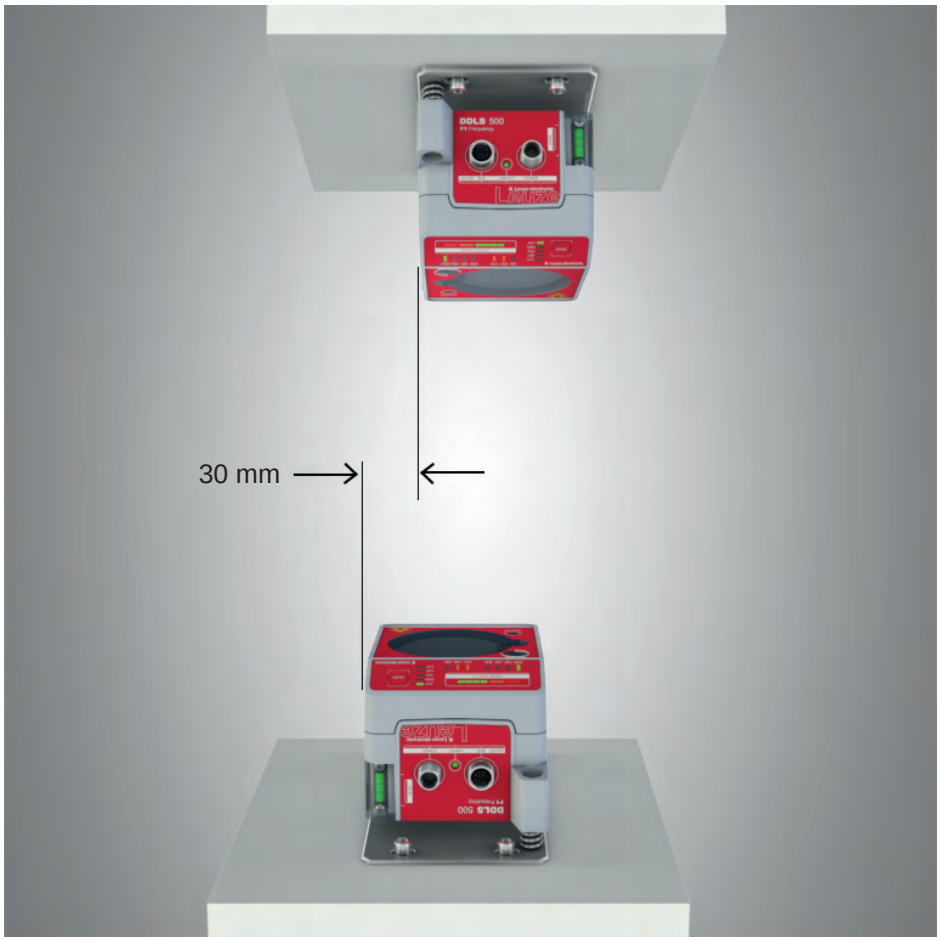

Fig. 4.7: Lateral offset of the devices with vertical mounting

	NOTICE
	You will achieve greater flexibility during basic installation and fine adjustment if you mount the devices on C profile rails.

- Detach the contour of the optical window from the drilling template along the perforation.
- Affix the removed drilling template to the optical window of the mobile device using the supplied self-adhesive labels.
- Switch on the alignment laser of the stationary device. Activate the LAS (Alignment laser) operating mode to switch on the alignment laser (see chapter 6.1 "Setting the operating mode").
- Move the mobile device on the lifting axis in manual operation to maximum distance.
- Align the stationary device using the alignment screws (see chapter 3.1.1 "Device construction", point 11 and point 12) and, if necessary, using the C-profile rails.
  - ⇨ The target spot of the alignment laser must be in the center of the drilling template on the mobile device.
- Move the mobile device on the lifting axis in manual operation to minimum distance.
  - ⇨ The target spot of the alignment laser must not extend beyond the outer ring of the drilling template on the mobile device.
  - ⇨ If necessary, realign the stationary device.
- Switch off the alignment laser of the stationary device. Activate the AUT (Automatic) operating mode to switch off the alignment laser (see chapter 6.1 "Setting the operating mode").
- Affix the detached drilling template to the optical window of the stationary device using the supplied self-adhesive labels.
- Switch on the alignment laser of the mobile device. Activate the LAS (Alignment laser) operating mode to switch on the alignment laser (see chapter 6.1 "Setting the operating mode").

- Move the mobile device on the lifting axis in manual operation to maximum distance.
- Align the mobile device using the alignment screws (see chapter 3.1.1 "Device construction", point 11 and point 12) and, if necessary, using the C-profile rails.
  - The target spot of the alignment laser must be in the center of the drilling template on the stationary device.
- Move the mobile device on the lifting axis in manual operation to minimum distance.
  - The target spot of the alignment laser must not extend beyond the outer ring of the drilling template on the stationary device.
  - If necessary, realign the mobile device.
- Switch off the alignment laser of the mobile device. Activate the AUT (Automatic) operating mode to switch off the alignment laser (see chapter 6.1 "Setting the operating mode").
- Remove the drilling template from the stationary device.
- This concludes the mounting of the devices in the lifting axis.

Further procedure:

- Perform the fine adjustment for the lifting axis (see chapter 6.2 "Fine adjustment").

4.3 Mounting without alignment laser

- Observe the mounting instructions (see chapter 4.1 "Mounting instructions").

	NOTICE
	You will achieve greater flexibility during basic installation and fine adjustment if you mount the devices on C profile rails.

4.3.1 Horizontal mounting (travel axis) without alignment laser

- Depending on mechanical conditions, mount the stationary or mobile device with four M5 screws via the fastening holes in the mounting plate.
- Move the mobile device as close as possible to the stationary device.
- Determine the vertical mounting position of both devices.
  - Place an alignment straightedge or level on top of the planar support surfaces in the connection area of both devices.
  - Move the devices until they are at the same height.
- Determine the horizontal mounting position of both devices.
  - Place an alignment straightedge or level on the lateral support edge of one of the devices.
  - Move the devices towards one another horizontally so that there is an offset of 30 mm between them (see figure). The transmitter of one device is positioned opposite the receiver of the other device.

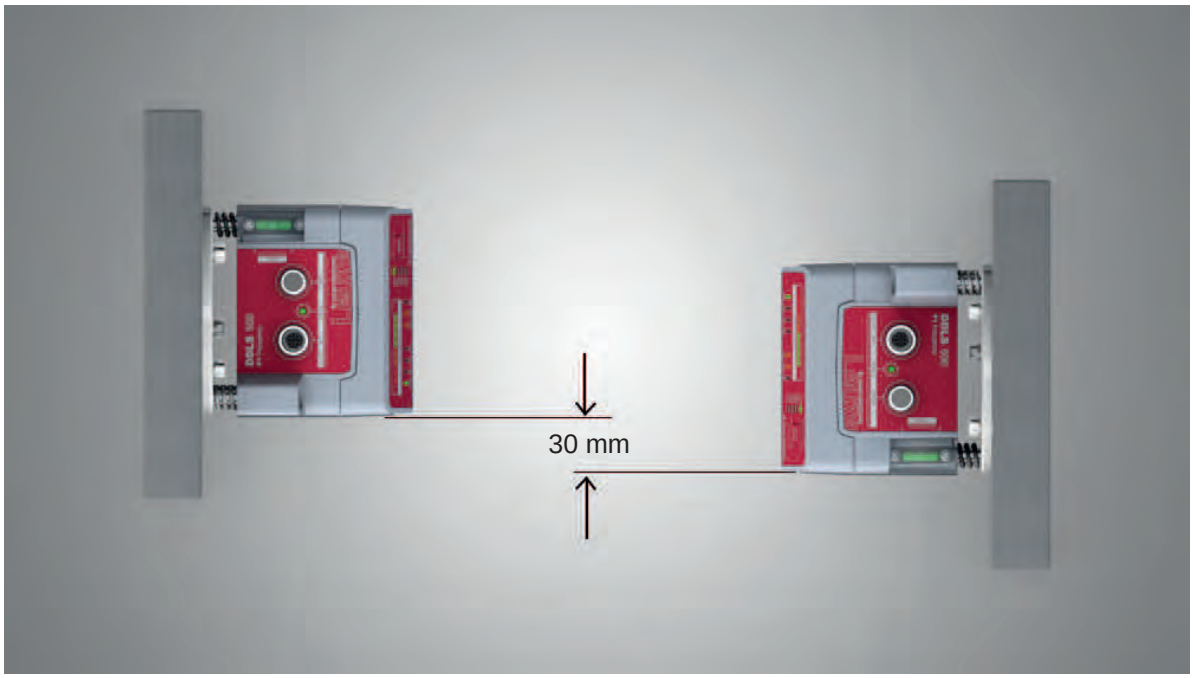

Fig. 4.8: Mounting with offset housings

⇨ Mounting of the device is concluded.

Further procedure:

- Connect the devices electrically (see chapter 5 "Electrical connection").
- Perform the fine adjustment for the travel axis (see chapter 6.2 "Fine adjustment").

4.3.2 Vertical mounting (lifting axis) without alignment laser

↳ Mount the two devices opposite one another with a lateral offset of 30 mm.

⇨ Place an alignment straightedge or level on the lateral support edge of one of the devices.

⇨ Move the devices towards one another horizontally so that there is an offset of 30 mm between them (see figure). The transmitter of one device is positioned opposite the receiver of the other device.

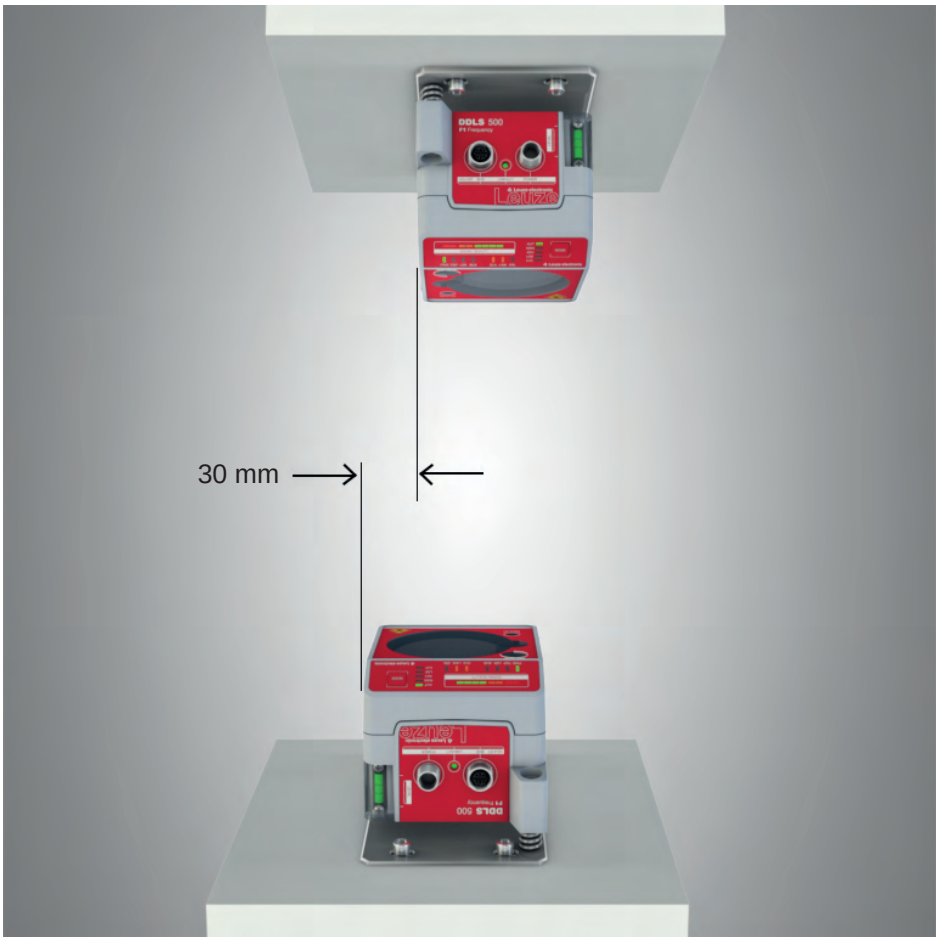

Fig. 4.9: Lateral offset of the devices with vertical mounting

↳ Determine the horizontal mounting position of both devices.

⇨ Place an alignment straightedge or level on the planar support surfaces in the connection area of both devices.

⇨ Move the devices until both are flush with one another. To do this, use the vertical level of a bubble level.

⇨ Mounting of the device is concluded.

Further procedure:

- Connect the devices electrically (see chapter 5 "Electrical connection").
- Perform the fine adjustment for the lifting axis (see chapter 6.2 "Fine adjustment").

4.4 Mounting tolerances of the devices

The maximum allowed mounting tolerances of the devices are dependent on the minimum distance of the devices in the system.

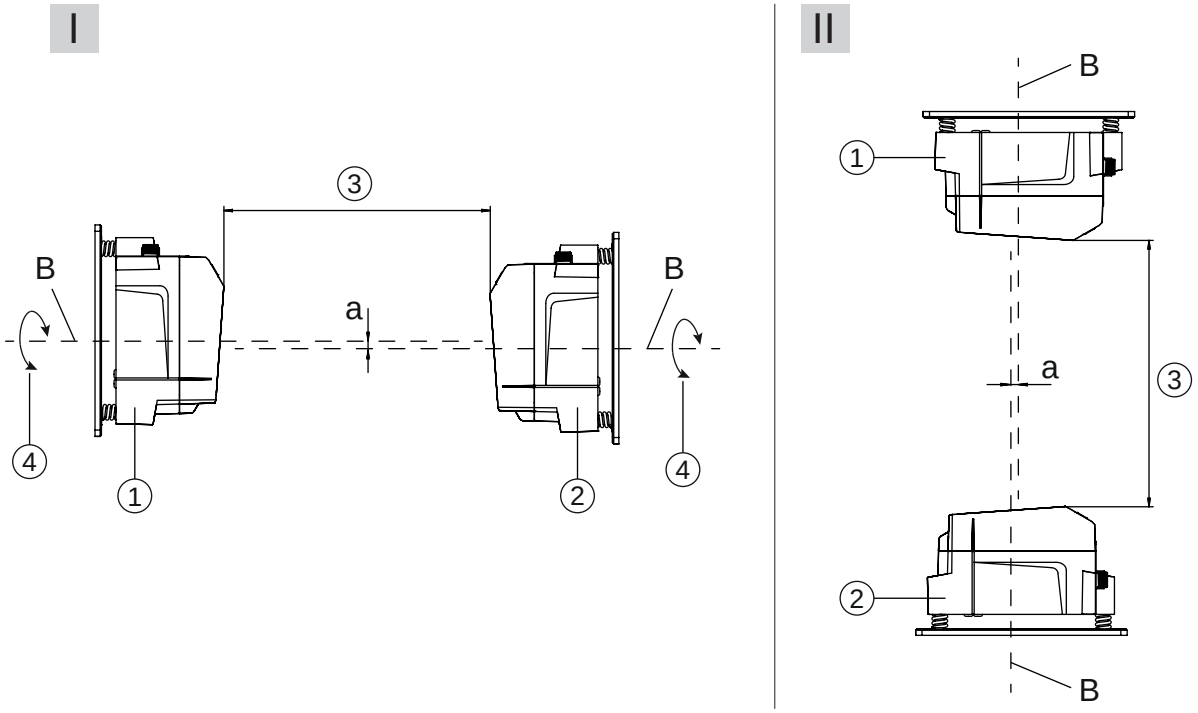

I	Horizontal mounting (travel axis)
II	Vertical mounting (lifting axis)
B	Center axis of transmitter and receiver (see chapter 10.2 "Dimensioned drawings")
a	Maximum mounting tolerance
1	Device with Frequency F3
2	Device with Frequency F4
3	Minimum distance between the devices, A_{min}
4	Rotary transmission possible with device separation (3) of greater than 500 mm

Fig. 4.10: Maximum allowed mounting tolerance

The maximum mounting tolerance is calculated using the following formula:

$$a = \pm(A_{min} \times 0{,}01 + 5\ \text{mm})$$

a	[mm]	Maximum mounting tolerance of the devices
A_{min}	[mm]	Applied minimum distance in the system

Maximum lateral mounting tolerance

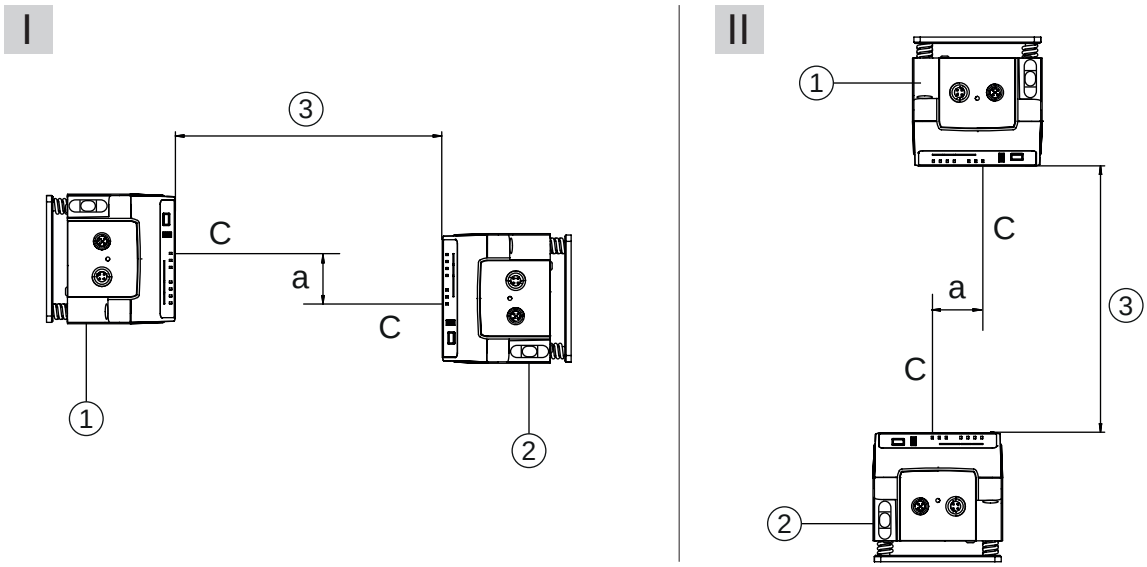

I	Horizontal mounting (travel axis)
II	Vertical mounting (lifting axis)
C	Center axis of receiver (see chapter 10.2 "Dimensioned drawings")
a	Maximum lateral mounting tolerance
1	Device with Frequency F3
2	Device with Frequency F4
3	Minimum distance between the devices, A_{min}

Fig. 4.11: Maximum lateral mounting tolerance

The maximum lateral mounting tolerance is calculated using the following formula:

$$a = 30\ \text{mm} \pm (A_{min} \times 0{,}01 + 5\ \text{mm})$$

a	[mm]	Maximum mounting tolerance of the devices
A_{min}	[mm]	Applied minimum distance in the system

4.5 Mounting distance for parallel operation of data transmission systems

If it is necessary to operate multiple optical data transmission systems next to one another, the minimum mounting distances must be maintained.

The minimum mounting distance between two optical data transmission systems is determined by the following criteria:

- Maximum data transmission distance
- Frequency-offset mounting (F3/F4 / F4/F3)
- Identical frequency mounting (F3/F4 / F3/F4)
- Transmission beam spread of the devices

  The standard beam spread is ±0.5°.

Frequency-offset mounting

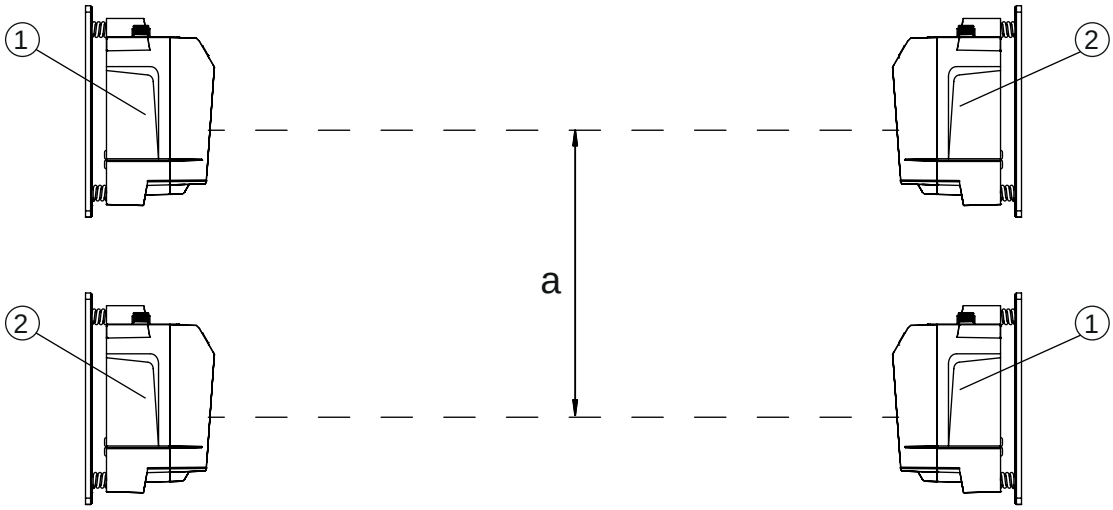

a Minimum mounting distance
1 Device with frequency 3 (Frequency F3, DDLS 5XX xxx. **3** YY)
2 Device with frequency 4 (Frequency F4, DDLS 5XX xxx. **4** YY)

Fig. 4.12: Frequency-offset mounting

Tab. 4.2: Minimum mounting distance for frequency-offset mounting of the devices

Range of the device	Minimum mounting distance between the devices
40 m (DDLS 5XX **40**...)	300 mm
120 m (DDLS 5XX **120**...)	300 mm
200 m (DDLS 5XX **200**...)	500 mm

Identical-frequency mounting

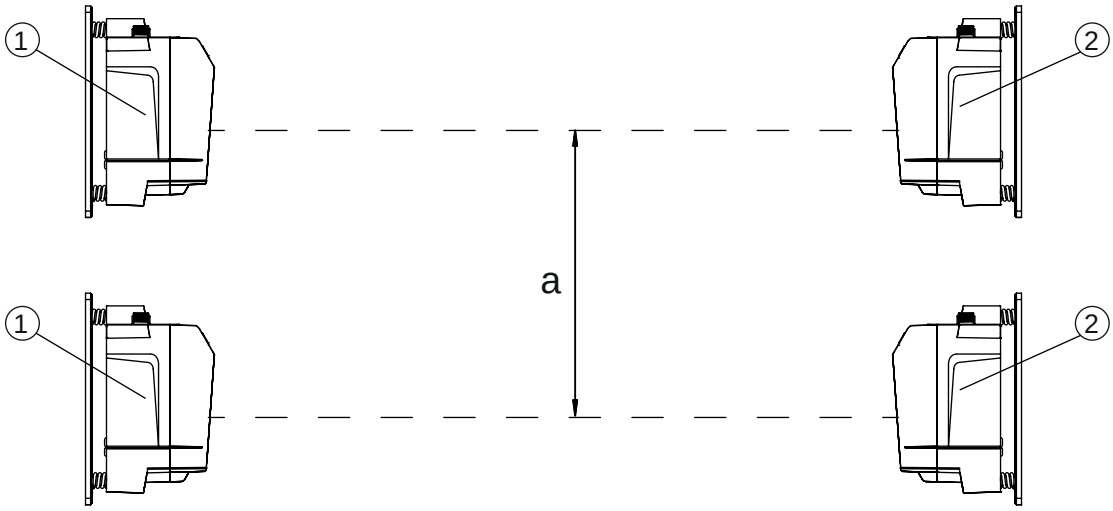

a Minimum mounting distance
1 Device with frequency 3 (Frequency F3, DDLS 5XX xxx. **3**-YY)
2 Device with frequency 4 (Frequency F4, DDLS 5XX xxx. **4**-YY)

Fig. 4.13: Identical-frequency mounting

Minimum mounting distance

With identical-frequency mounting of the devices, the minimum mounting distance is determined using the following formula:

$$a = 300\ \text{mm} + (\tan(x) \times \text{Distanz})$$

a	[mm]	Minimum mounting distance
tan(x)	[-]	Tangent of the transmission beam spread of the device
Distance	[mm]	Maximum data transmission distance in the system

NOTICE

On request, the devices can be delivered with transmission optics with beam spread of greater than ±0.5°. The larger transmission beam spread must be used in the calculation for identical-frequency parallel mounting of these device versions.

4.6 Mounting distance for parallel operation with AMS 300/AMS 200 laser measurement systems

The mounting of an AMS 300/AMS 200 laser measurement system does not affect data transmission if the devices are correctly aligned.

- The reflector size of the AMS 300/AMS 200 determines the minimum mounting distance of the device to the AMS.

  Reflector sizes from 200 x 200 mm to 1000 x 1000 mm are permissible.

  Details on the permissible reflector types can be found in the "Technical description" of the AMS 300/AMS 200.
- The device can be mounted directly next to the reflectors of the AMS 300/AMS 200.

4.7 Mounting distance for parallel operation with DDLS 200 data transmission system

For the determination of the minimum mounting distance, the details for identical-frequency mounting apply (see chapter 4.5 "Mounting distance for parallel operation of data transmission systems").

4.8 Cascading (series connection) of multiple data transmission systems

If there are multiple optical data transmission paths between two participants (TN), one speaks of cascading.

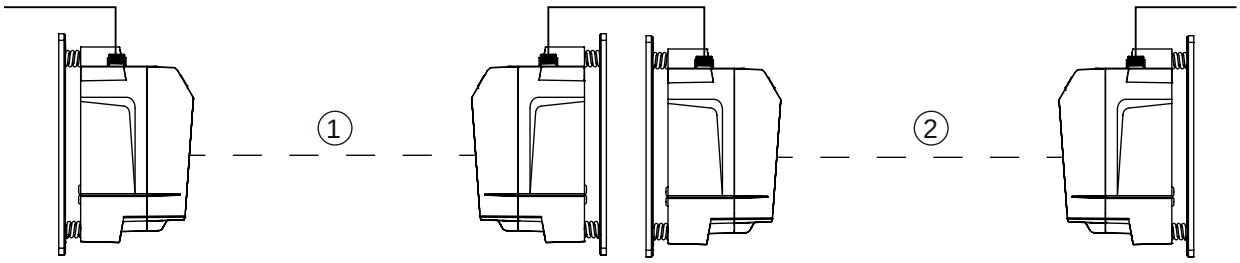

1 Optical data transmission path 1
2 Optical data transmission path 2

Fig. 4.14: Example: Cascading of multiple data transmission systems

Cascading the devices

Cascading is possible if the specifications of the protocols to be transmitted are not violated with respect to delay times or jitter tolerances.

Due to the very short delay times of the devices, cascading is possible without problem for very many Ethernet protocols.

For transmission protocols that are very tightly specified with respect to delay times and jitter tolerances (e.g., for synchronous transmissions), the user must check the suitability of the devices individually.

- Protocol propagation times:

  Constant delay time per path (2 devices): 5 µs
- Distance-dependent delay:

  Distance 0 m: 0 µs

  Distance 200 m: 0.66 µs

5 Electrical connection

5.1 Overview

The electrical connection of the device is performed using M12 connectors.

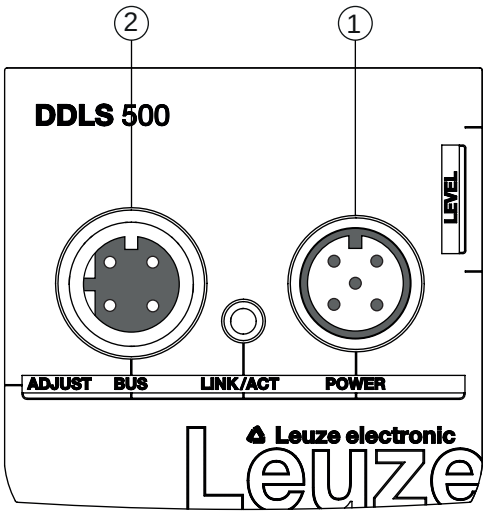

1 POWER
2 BUS

Fig. 5.1: Position and designation of the M12 connections

CAUTION

Safety notices!

- Before connecting the device, be sure that the supply voltage agrees with the value printed on the name plate.
- Only have the electrical connection performed by certified electricians.
- Ensure that the functional earth (FE) is connected correctly. Fault-free operation is only guaranteed if the functional earth is connected properly.
- If faults cannot be rectified, take the device out of operation. Protect the device from accidentally being started.

CAUTION

UL applications!

For UL applications, use is only permitted in Class 2 circuits in accordance with the NEC (National Electric Code).

NOTICE

Protective Extra Low Voltage (PELV)!

The device is designed in accordance with protection class III for supply with PELV (Protective Extra-Low Voltage).

NOTICE

Laying cables!

- Lay all connection cables and signal lines within the electrical installation space or permanently in cable ducts.
- Lay the cables and lines so that they are protected against external damages.
- For further information: see ISO 13849-2, Table D.4.

5.2 POWER (supply voltage / switching input and switching output)

5-pin, M12 plug (A-coded) for connecting to POWER.

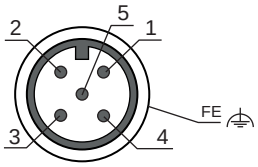

Fig. 5.2: Pin assignments for POWER connection

Tab. 5.1: POWER pin assignments

Pin	Designation	Assignment
1	VIN	Positive supply voltage +18 … +30 VDC
2	IO1	Switching output (intensity/SIGNAL QUALITY) Voltage: • +18 … +30 VDC: received signal level/SIGNAL QUALITY ok • 0 VDC: intensity warning: received signal level/SIGNAL QUALITY not sufficient
3	GND	Negative supply voltage 0 VDC
4	IO2	Switching input (transmitter shutdown) Voltage: • +18 … +30 VDC: transmitter not active • 0 VDC: transmitter active
5	FE	Functional earth
(Thread for M12 connector plug)	FE	Connection cable shield The shield of the connection cable is on the thread of the M12 connector plug. The thread of the M12 connector plug is part of the metallic housing. The housing is at the potential of the functional earth via pin 5.

Connection cables: see chapter 11.2 "Cables accessories"

Switching input/output

The device is equipped with a switching output IO1 and a switching input IO2.

- Using the switching input, the transmitter (pin 4) can be activated and deactivated. On deactivation, the optical link is interrupted (OLK LED).

	NOTICE
	Deactivation of the transmitter can be used during a corridor change to avoid interference effects, e.g., with other optical sensors.

- If the received signal level drops (SIGNAL QUALITY), the intensity warning is activated via the switching output.

  The intensity warning is activated as soon as no green LED illuminates on the SIGNAL QUALITY indicator.

	NOTICE
	Data transmission remains active until the last orange LED of the SIGNAL QUALITY indicator switches off. Data transmission is then deactivated. The intensity warning remains active even after the last orange LED of the SIGNAL QUALITY indicator switches off.

NOTICE

Maximum input current!

The maximum input current of the switching input is 8 mA.

NOTICE

Maximum loading of the switching output!

The switching output is protected against short-circuit, overcurrent, overvoltage, excess temperature and transients.

↳ Do not load the switching output with more than 60 mA at +18 … +30 VDC.

5.3 BUS (bus input, Ethernet)

4-pin, M12 socket (D-coded) for connecting to BUS (Ethernet connection).

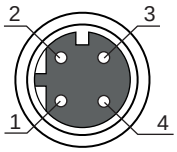

Fig. 5.3: Pin assignments for BUS connection

Tab. 5.2: BUS pin assignments

Pin	Designation	Assignment
1	TD+	Transmit Data + (transmitter)
2	RD+	Receive Data + (receiver)
3	TD-	Transmit Data - (transmitter)
4	RD-	Receive Data - (receiver)
(M12-socket thread)	FE	Connection cable shield The shield of the connection cable is on the thread of the M12 socket. The thread of the M12 socket is part of the metallic housing. The housing is at the potential of the functional earth via pin 5 of the POWER connector plug.

Connection cables: see chapter 11.2 "Cables accessories"

NOTICE

The device supports a transmission rate of 100 Mbit/s in full duplex mode as well as auto-crossover.

NOTICE

The entire interconnection cable must be shielded.

The shielding connection must be at the same potential at both ends of the data line. This serves to prevent potential equalization currents over the shield and possible interference coupling through compensating currents.

↳ Use at least a CAT 5 cable for the connection.

6 Starting up the device

6.1 Setting the operating mode

The active operating mode is displayed on the control panel to the left next to the operating mode selector switch [MODE] via LEDs (see chapter 3.3.1 "Indicators and operational controls in the control panel").

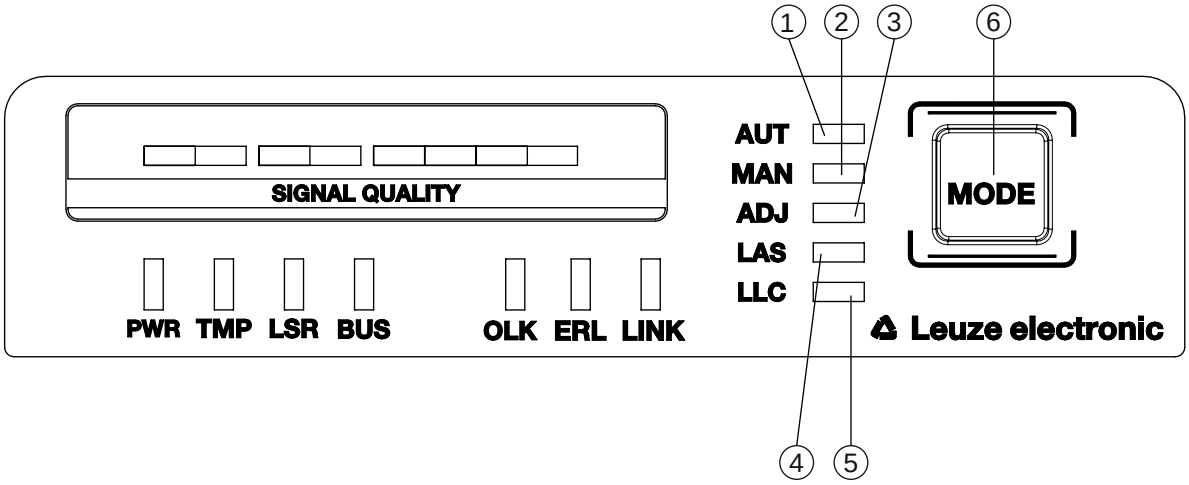

1 AUT – Automatic
2 MAN – Manual
3 ADJ – Adjust
4 LAS – Alignment laser for mounting support
5 LLC – Link Loss Counter
6 MODE – Operating mode selector switch

Fig. 6.1: Operating mode selector switch and operating mode LEDs

The operating mode selector switch [MODE] is used to switch between the operating modes of the device:

Tab. 6.1: Operating modes

Operating mode	Description
AUT Automatic	Standard operating mode for data transmission. When the supply voltage is applied, the device starts in the AUT operating mode. **Note:** Operating modes that were active before the device was switched off are no longer active after the device is switched back on.
MAN Manual	Operating mode for fine adjustment of the devices via SHA (see chapter 6.2.2 "Fine adjustment with the single-handed adjustment (SHA) process"). Data transmission switches off as soon as no green LEDs in the SIGNAL QUALITY indicator illuminate. **Note:** The AUT LED switches off if the MAN operating mode is activated.

Operating mode	Description
ADJ Aligning (Adjust)	Operating mode for fine adjustment of the devices via SHA (see chapter 6.2.2 "Fine adjustment with the single-handed adjustment (SHA) process"). • Data transmission to the connected participants is interrupted. • The received signal level (SIGNAL QUALITY indicator) of the second device is transmitted to the SIGNAL QUALITY indicator of the first device. The quality of the fine adjustment is read directly on the device (SIGNAL QUALITY indicator) on which the fine adjustment is performed via the alignment screws. **Notes**: • The AUT LED switches off if the ADJ operating mode is activated. • The MAN LED switches off if the ADJ operating mode is activated.
LAS Laser Adjustment System (Alignment laser)	Operating mode for activation/deactivation of the alignment laser (see chapter 4.2 "Mounting with alignment laser and level"). **Notes**: • The LAS operating mode can only be activated for devices with alignment laser. • If the LAS operating mode is activated for an actively transmitting data transmission path, data transmission remains active. • The AUT LED (green) illuminates simultaneously with the LAS LED (green). • In the LAS operating mode, the MAN, ADJ and LLC operating modes are not to be activated.
LLC Link Loss Counter (interruption diagnostics)	Operating mode for activation/deactivation of interruption diagnostics. If LLC is activated, an interruption of the optical link is displayed via the LLC LED (see chapter 3.3.1 "Indicators and operational controls in the control panel"). **Notes:** • The LLC LED illuminates red even if the optical link is restored following an interruption. • The AUT LED (green) illuminates simultaneously with the LLC LED (green or red). • To reactivate LLC following an interruption of the optical link, the LLC operating mode must be reset. • In the LLC operating mode, the MAN, LAS and ADJ operating modes are deactivated.

Activating the operating mode

↳ Select the desired operating mode by briefly pressing the operating mode selector switch [MODE].

⇨ Repeatedly pressing the operating mode selector switch [MODE] selects the next operating mode, rolling from top to bottom.

⇨ The LED of the selected operating mode flashes.

↳ Activate the selected operating mode.

⇨ Press the operating mode selector switch [MODE] for approx. two seconds until the LED of the selected operating mode illuminates continuously.

⇨ Release the operating mode selector switch [MODE] to activate the selected operating mode.

⇨ The LED of the selected operating mode illuminates continuously.

	NOTICE
	Data transmission remains active while changing the operating mode. Exception: operating mode ADJ. After activating the ADJ operating mode, data transmission of process data is interrupted.

Deactivating the operating mode

↳ Select a new operating mode by repeatedly pressing the operating mode selector switch [MODE] for a short time.

⇨ The LED of the newly selected operating mode flashes.

↳ Activate the newly selected operating mode.

⇨ Press the operating mode selector switch [MODE] for approx. two seconds until the LED of the newly selected operating mode illuminates continuously.

⇨ Release the operating mode selector switch [MODE] to activate the newly selected operating mode.

⇨ The previously activated operating mode is deactivated. The LED of the newly selected operating mode illuminates continuously.

	NOTICE
	If, while selecting a new operating mode, the operating mode selector switch [MODE] is not pressed for a longer period of time (> 10 s), the previously activated operating mode remains active.

6.2 Fine adjustment

6.2.1 General procedure

Fine adjustment of the data transmission must be carried out after installation.

Prerequisites:

- The devices are mounted mutually opposing one another, are electrically connected and are roughly aligned (see chapter 4 "Mounting").
- The devices are opposite one another at a close distance (> 1 m). The SIGNAL QUALITY indicator shows at least one or two green LEDs on both devices.

Perform fine adjustment

There are two processes for performing the fine adjustment:

- The patented single-handed adjustment (SHA) procedure makes it possible for a single person to monitor the "Signal Quality" and adjust the transmitter (see chapter 6.2.2 "Fine adjustment with the single-handed adjustment (SHA) process").
- The alternative procedure requires two people (see chapter 6.2.3 "Fine adjustment without the single-handed adjustment (SHA) process").
  - One person monitors the "Signal Quality".
  - The second person adjusts the transmitter at the mutually opposing device.

Decide which of the two processes to use; explanations can be found in the following chapters.

6.2.2 Fine adjustment with the single-handed adjustment (SHA) process

The SHA process is a standard function that is implemented in every device. With the SHA process, you can perform the fine adjustment with just one person.

↳ Activate the MAN (Manual) operating mode on both devices (see chapter 6.1 "Setting the operating mode").

↳ Enter a travel command for the travel axis or lifting axis to the end of the transportation path or move the axis manually or in automatic mode to the end of the transportation path.

↳ Data transmission is automatically deactivated when the last green LED in the SIGNAL QUALITY display goes out.

⇨ The travel axis or lifting axis is normally stopped automatically if data transmission is interrupted. If not, stop the axis manually.

⇨ One orange LED must still be illuminated in the SIGNAL QUALITY indicator.

↳ Activate the ADJ operating mode (alignment) (see chapter 6.1 "Setting the operating mode").

NOTICE
If the MAN operating mode (manual) is activated on both devices, the mutually opposing device is also switched to the ADJ operating mode (alignment) upon switching to the ADJ operating mode (alignment).

Adjust the first device as follows:

- Rotate the upper alignment screw to the right until the last green LED on the SIGNAL QUALITY indicator switches off (see chapter 3.1.1 "device construction").
- Then rotate the alignment screw to the left until the last green LED on the SIGNAL QUALITY indicator switches off. Count the number of rotations.
- Then rotate the alignment screw half the number of rotations that was counted to the right again.
  - ⇨ Data transmission is now vertically aligned in the exact center.
- Rotate the lower alignment screw to the right until the last green LED on the SIGNAL QUALITY indicator switches off (see chapter 3.1.1 "device construction").
- Then rotate the alignment screw to the left until the last green LED on the SIGNAL QUALITY indicator switches off. Count the number of rotations.
- Then rotate the alignment screw half the number of rotations that was counted to the right again.
  - ⇨ Data transmission is now horizontally aligned in the exact center.

Go to the second device. There, the ADJ (Adjust) operating mode is activated.

- Adjust the second device in the same way that the first device was adjusted.
- First align data transmission vertically, then horizontally.
  - ⇨ Both devices are optimally aligned for the current distance.
- Repeat the process several times if necessary starting with the second step (“Travel command for travel axis or lifting axis”) until the maximum transmission distance is reached.

NOTICE
Alignment at maximum transmission distance! ↳ At the maximum transmission distance, The procedure must be carried out for the last time starting with the fourth step (“Operating mode ADJ”). Only then are the devices optimally aligned with each other.

- Activate the AUT (Automatic) operating mode on both devices (see chapter 6.1 "Setting the operating mode").
- ⇨ The devices are now ready.

NOTICE
At the maximum transmission distance, the SIGNAL QUALITY indicator may be one or two green LEDs short of end-scale deflection. Data transmission is, however, still active.

6.2.3 Fine adjustment without the single-handed adjustment (SHA) process

For fine adjustment without the SHA process, two people are needed. Both people must communicate with one another.

- One person monitors the stationary device.
- The second person monitors the mobile device.
- Activate the AUT (Automatic) operating mode on both devices (see chapter 6.1 "Setting the operating mode").
- Move the travel axis or lifting axis in the direction of maximum distance.
  - ⇨ The person at the mobile device and the person at the stationary device each monitor the respective SIGNAL QUALITY indicator.
- Stop the axis as soon as the SIGNAL QUALITY indicator on either of the devices no longer shows any green LEDs.

Adjust the mobile device if the stationary device shows a reduced received signal level (SIGNAL QUALITY).

- Rotate the upper alignment screw to the right until the last green LED on the SIGNAL QUALITY indicator switches off **at the mutually opposing device** (see chapter 3.1.1 "device construction"). To do this, **communication with the second person** is required at the mutually opposing device.
  - ⇨ **Note:** The second person on the mutually opposing device notifies you of their "Signal Quality" indicator.
- Then rotate the alignment screw to the left until the last green LED on the SIGNAL QUALITY indicator switches off. Only count the number of rotations.
- Then rotate the alignment screw half the number of rotations that was counted to the right again.
  - ⇨ Data transmission is now vertically aligned in the exact center.
- Rotate the lower alignment screw to the right until the last green LED on the SIGNAL QUALITY indicator switches off **at the mutually opposing device** (see chapter 3.1.1 "device construction"). To do this, **communication with the second person** is required at the mutually opposing device.
  - ⇨ **Note:** The second person on the mutually opposing device notifies you of their "Signal Quality" indicator.
- Then rotate the alignment screw to the left until the last green LED on the SIGNAL QUALITY indicator switches off. Only count the number of rotations.
- Then rotate the alignment screw half the number of rotations that was counted to the right again.
  - ⇨ Data transmission is now horizontally aligned in the exact center.

Adjust the stationary device if the mobile device displays a reduced received signal level (SIGNAL QUALITY).

- Rotate the upper alignment screw to the right until the last green LED on the SIGNAL QUALITY indicator switches off **at the mutually opposing device** (see chapter 3.1.1 "device construction"). To do this, **communication with the second person** is required at the mutually opposing device.
  - ⇨ **Note**: The second person on the mutually opposing device notifies you of their "Signal Quality" indicator.
- Then rotate the alignment screw to the left until the last green LED on the SIGNAL QUALITY indicator switches off. Only count the number of rotations.
- Then rotate the alignment screw half the number of rotations that was counted to the right again.
  - ⇨ Data transmission is now vertically aligned in the exact center.
- Rotate the lower alignment screw to the right until the last green LED on the SIGNAL QUALITY indicator switches off **at the mutually opposing device** (see chapter 3.1.1 "device construction"). To do this, **communication with the second person** is required at the mutually opposing device.
  - ⇨ **Note:** The second person on the mutually opposing device notifies you of their "Signal Quality" indicator.
- Then rotate the alignment screw to the left until the last green LED on the SIGNAL QUALITY indicator switches off. Only count the number of rotations.
- Then rotate the alignment screw half the number of rotations that was counted to the right again.
  - ⇨ Data transmission is now horizontally aligned in the exact center.
- Repeat the process several times if necessary starting with the second step (“Move travel axis or lifting axis”) until the maximum transmission distance is reached.

	NOTICE
	Alignment at maximum transmission distance! ↳ At the maximum transmission distance, the procedure must be carried out for the last time starting with the step “Adjust mobile device”. Only then are the devices optimally aligned with each other.

⇨ The devices are now ready.

	NOTICE
	At the maximum transmission distance, the SIGNAL QUALITY indicator may be one or two green LEDs short of end-scale deflection. Data transmission is, however, still active.

7 Diagnostics and troubleshooting

What to do in case of failure?

The LED displays in the control panel provide information about possible warnings or errors (see chapter 3.3.1 "Indicators and operational controls in the control panel"). Using the LED displays, you can determine the causes and initiate rectification measures.

	NOTICE
	Contact Leuze subsidiary/customer service! ↳ If the specified measures are not successful, contact the responsible Leuze subsidiary or Leuze customer service (see chapter 9 "Service and support").

7.1 Error displays of the operating state LEDs

Tab. 7.1: PWR LED displays – Causes and measures

LED	Color	State	possible causes	Measures
PWR	---	OFF	No supply voltage	Check supply voltage.
			Hardware error	Contact Leuze customer service (see chapter 9 "Service and support").
	Red	Flashing	Ambient temperature too high Warning message set: temperature warning	Initiate measures for lowering the ambient temperature.
	Red	Continuous light	Device error	Contact Leuze customer service (see chapter 9 "Service and support").

Tab. 7.2: TMP LED displays - Causes and measures

LED	Color	State	possible causes	Measures
TMP	Orange	Continuous light	The operating temperature is above or below the specified range by up to 5 °C.	Check ambient temperature. • Initiate measures for lowering the ambient temperature.
	Red	Continuous light	The operating temperature is above or below the specified range by more than 5 °C.	Check ambient temperature. • Initiate measures for lowering the ambient temperature.
Note Data transmission remains active if above or below the operating temperature. An operating hour counter is started internally that records the operating time outside of the specified operating temperature. In this case, the laser diode is excluded from guarantee services.				

Tab. 7.3: LSR LED displays - Causes and measures

LED	Color	State	possible causes	Measures
LSR	Orange	Continuous light	The laser diode of the transmitter is nearing the end of its life expectancy.	Contact Leuze customer service (see chapter 9 "Service and support"). Send in the device for replacement of the laser diode.
	Orange	Flashing	Laser monitoring has detected an excessively high laser transmitter current and deactivated the transmitter.	Contact Leuze customer service (see chapter 9 "Service and support").
Note Data transmission remains active until no LEDs illuminate in the SIGNAL QUALITY indicator due to decreasing laser power.				

Tab. 7.4: OLK LED displays - Causes and measures

LED	Color	State	possible causes	Measures
OLK	---	OFF	No optical data connection: • Optical window soiled • Insufficient alignment • Range exceeded • Environmental influences (snow, rain, fog) • Wrong frequency assignment of the devices • Transmitter deactivated • Transmitter of the second device deactivated	• Clean optical window • Eliminate the possibility of environmental influences such as snow, rain, fog. • Check alignment of the devices (see chapter 6.2 "Fine adjustment"). • Check F3/F4 frequency assignment of the devices. • End deactivation of the transmitters.

Tab. 7.5: ERL LED displays - Causes and measures

LED	Color	State	possible causes	Measures
ERL	Orange	Continuous light	Link error on second device: • Missing link on Ethernet cable connection of the second device. • SIGNAL QUALITY indicator on second device without green and orange LEDs.	Check Ethernet cable connection on second device. Check cause for the reduced SIGNAL QUALITY: • Device alignment • Clean optical window. • Eliminate the possibility of environmental influences such as snow, rain, fog. • Laser diode: at end of life expectancy Check LSR LED.
	Red	Continuous light	Link error on first device: • Missing link on Ethernet cable connection of the first device. • SIGNAL QUALITY indicator on first device without green and orange LEDs.	Check Ethernet cable connection on first device. Check cause for the reduced SIGNAL QUALITY: • Device alignment. • Clean optical window. • Eliminate the possibility of environmental influences such as snow, rain, fog. • Laser diode: at end of life expectancy Check LSR LED.

Tab. 7.6: LINK and LINK/ACT LED displays – Causes and measures

LED	Color	State	possible causes	Measures
LINK LINK/ ACT	---	OFF	No cable-connected link to the connected device.	Check Ethernet cable connection.

7.2 Error displays and STATUS LED for remote diagnosis

Tab. 7.7: STATUS LED displays – Causes and measures

LED	Color	State	possible causes	Measures
STATUS LED	Green	Flashing	Warning message(s) set: • SIGNAL QUALITY indicator without green LED. • Temperature, warning or error (TMP). • Laser pre-failure (LSR). • Link Loss Counter has triggered (LLC).	Check cause for the reduced SIGNAL QUALITY: • Device alignment. • Clean optical window. • Eliminate the possibility of environmental influences such as snow, rain, fog. • Laser diode: at end of life expectancy Check LSR LED (see chapter 7.1 "Error displays of the operating state LEDs"). Check ambient temperature • Initiate measures for lowering the ambient temperature.
	---	OFF	The transmitter is deactivated: • No supply voltage. • SIGNAL QUALITY indicator shows only red LEDs. • The LINK and LINK/ACT LEDs are off.	Check supply voltage. Check Ethernet cable connection. Check cause for the reduced SIGNAL QUALITY: • Device alignment • Clean optical window • Eliminate the possibility of environmental influences such as snow, rain, fog • Laser diode: at end of life expectancy Check LSR LED (see chapter 7.1 "Error displays of the operating state LEDs").

7.3 Error displays of the operating mode LEDs

Tab. 7.8: ADJ LED displays - Causes and measures

LED	Color	State	possible causes	Measures
ADJ	Green	Flashing	• The "Adjust" operating mode is not activated on the second device. • In the "Adjust" operating mode, the supply voltage of the second device was switched off/interrupted.	Activate the "Adjust" operating mode on the second device (see chapter 6.1 "Setting the operating mode").

Tab. 7.9: LLC LED displays - Causes and measures

LED	Color	State	possible causes	Measures
LLC	Red	Continuous light	• Optical window soiled • Travel tolerances greater than the transmission beam spread • Mounting/alignment insufficient • Range exceeded • Environmental influences (snow, rain, fog) • Transmitter of the first device deactivated • Transmitter of the second device deactivated	• Clean optical window. • Eliminate the possibility of environmental influences such as snow, rain, fog. • Check the mounting/alignment of the devices: Screw fitting of the devices Alignment Spring tension on the alignment screws • End deactivation of the transmitters.

8 Care, maintenance and disposal

8.1 Cleaning

↳ Clean the devices as necessary (warning message) with a soft cloth; use a cleaning agent (conventional glass cleaner) if necessary.

	NOTICE
	Do not use aggressive cleaning agents! ↳ Do not use aggressive cleaning agents such as thinner or acetone for cleaning the device. Use of improper cleaning agents can damage the optical window.

8.2 Servicing

The device does not normally require any maintenance by the operator.

Repairs to the device must only be performed by the manufacturer.

↳ For repairs, contact your responsible Leuze subsidiary or Leuze customer service (see chapter 9 "Service and support").

8.3 Disposing

↳ For disposal observe the applicable national regulations regarding electronic components.

9 Service and support

24-hour on-call service at:

+49 7021 573-0

Service hotline:

+49 7021 573-123

Monday to Friday 8.00 a.m. to 5.00 p.m. (UTC+1)

E-mail:

service.identify@leuze.de

Repair service and returns:

Procedure and Internet form can be found at

www.leuze.com/repair

Return address for repairs:

Service center

Leuze electronic GmbH + Co. KG

In der Braike 1

D-73277 Owen / Germany

What to do should servicing be required?

NOTICE

Please use this chapter as a master copy should servicing be required!

↳ Enter the contact information and fax this form together with your service order to the fax number given below.

Customer data (please complete)

Device type:	
Serial number:	
Firmware:	
Status of LEDs:	
Error description:	
Company:	
Contact person/department:	
Phone (direct dial):	
Fax:	
Street/No:	
ZIP code/City:	
Country:	

Leuze Service fax number:

+49 7021 573 - 199

10 Technical data

10.1 General specifications

10.1.1 Device without heater

Tab. 10.1: Optics

Light source	Laser diode
Wavelength - laser diode of the transmitter	F3: 785 nm (infrared; not visible) F4: 852 nm (infrared; not visible)
Wavelength - alignment laser	650 nm (red; visible)
Impulse duration	Transmitter (IR): 8 ns … 32 ns Alignment laser: 200 ms
Max. output power (peak)	Transmitter (IR): 36 mW Alignment laser: 0.39 mW
Laser class - transmitter infrared light	1M acc. to IEC/EN 60825-1:2014
Laser class - alignment laser red light	1 acc. to IEC/EN 60825-1:2014
Operating range	0.1 m to 40 m (DDLS 508 40.xx) 0.1 m to 120 m (DDLS 508 120.xx) 0.1 m to 200 m (DDLS 508 200.xx)
Beam spread of the transmitter	± 0.5° with respect to the optical axis for 40 m … 200 m devices
Beam spread of the receiver	± 1.2° with respect to the optical axis for 40 m … 200 m devices
Ambient light	> 10000 lux acc. to EN 60947-5-2
Data transmission	• All Ethernet protocols based on TCP/IP and UDP • Transmission rate: 100 Mbit/s • Transmission: full duplex • Auto-crossover possible

Tab. 10.2: Electrical equipment

Switching input	• +18 … +30 V DC depending on supply voltage Transmitter not active - no data transmission • 0 … 2 V DC Transmitter active - normal function
Switching output	• +18 … +30 V DC: received signal level/SIGNAL QUALITY ok (normal operating range) • 0 … 2 V DC: intensity warning SIGNAL QUALITY • Output current I max. = 60 mA.
Operating voltage U_B	+18 … +30 V DC
Current consumption	Approx. 200 mA at 24 V DC (no load at switching output)
Data transmission delay time	• Protocol propagation times: Constant delay time per path (2 devices): 2.3 µs • Distance-dependent delay: Distance 0 m: 0.00 µs Distance 200 m: 0.66 µs

CAUTION	
	UL applications! For UL applications, use is only permitted in Class 2 circuits in accordance with the NEC (National Electric Code).

Tab. 10.3: Indicators and operational controls

Individual LEDs	Operating status LEDs, operating mode LEDs in the control panel Status display of the Ethernet connection
LED line (bar graph)	Received signal level (SIGNAL QUALITY) LEDs in the control panel
Membrane keyboard	Operating mode selector switch [MODE] in the control panel

Tab. 10.4: Mechanical data

Housing	Diecast aluminum Optical inlet/outlet: glass Optical window: glass
Connection technology	M12 connectors
Degree of protection	IP 65 acc. to EN 60529
Weight	1185 g
Dimensions	(H x W x D) 156 mm x 100 mm x 99.5 mm

Tab. 10.5: Environmental data

Ambient temperature (operation)	-5 °C … +50 °C
Storage temperature	-35 °C … +70 °C
Air humidity	max. 90% rel. humidity, non-condensing
Vibration	IEC 60068-2-6
Shock	IEC 60068-2-27
Noise	IEC 60068-2-64
Electromagnetic compatibility	IEC 61000-6-2 and EN 1000-6-4 Industrial interference emission This is a Class A product. In a domestic environment, this product may cause radio interference. In this case the operator may be required to take appropriate measures.

Tab. 10.6: Certifications, conformity

Conformity	CE, CDRH
Certifications	UL 60950-1, CSA C 22.2 No. 60950-1

CAUTION	
	UL applications! For UL applications, use is only permitted in Class 2 circuits in accordance with the NEC (National Electric Code).

10.1.2 Device with heating

Specifications are the same as for device without heating with the following differences:

Tab. 10.7: Electrical equipment

Current consumption	< 700 mA at 24 V DC (no load at switching output)
Warmup time	Minimum 30 min at +24 V DC and an ambient temperature of -35 °C
Minimum conductor cross section	Conductor cross section of at least 0.75 mm² for the supply voltage supply line

Tab. 10.8: Environmental data

Ambient temperature (operation)	-35 °C … +50 °C

10.2 Dimensioned drawings

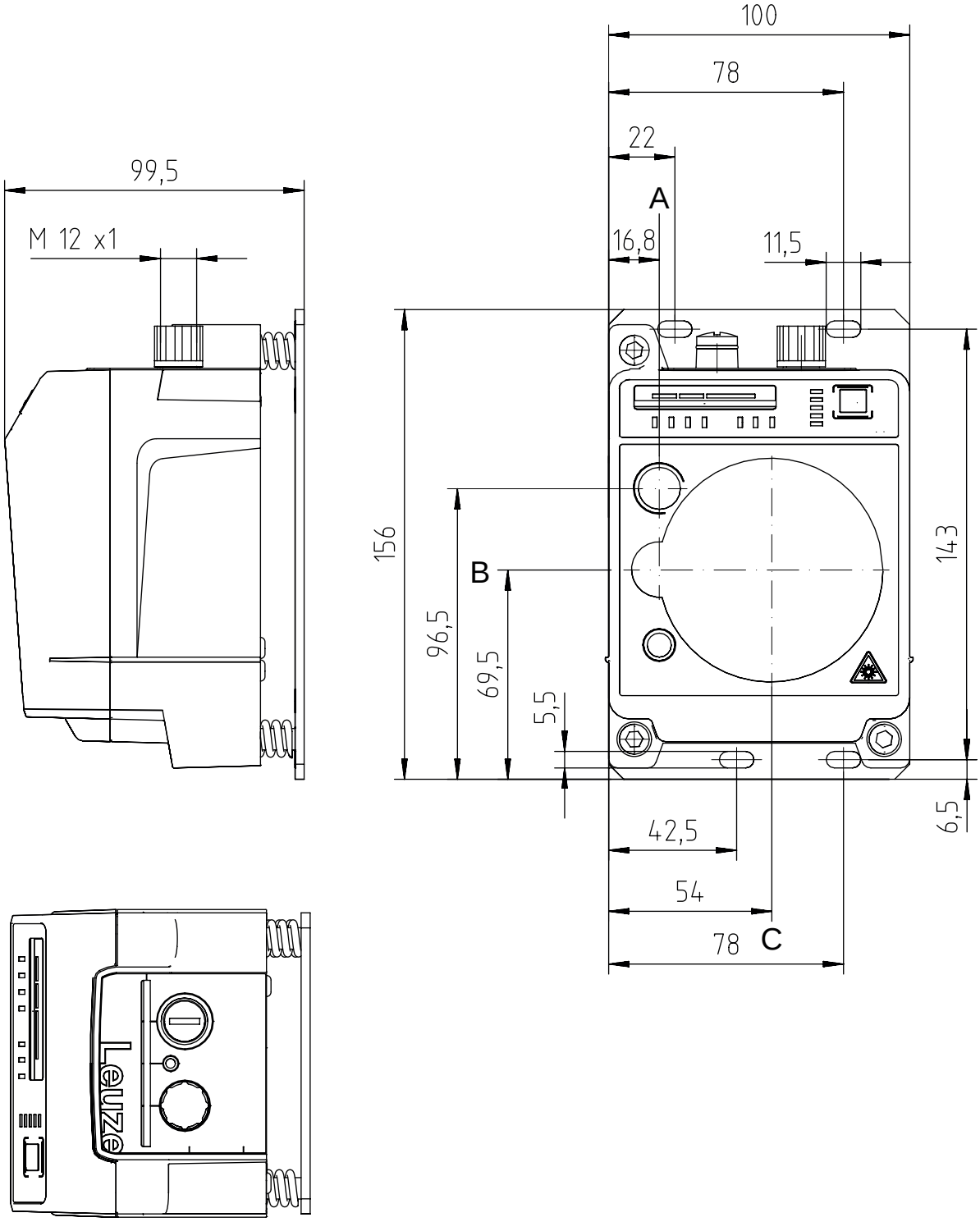

all dimensions in mm

A Center axis of transmitter and alignment laser

B Center axis of transmitter and receiver

C Center axis of receiver

Fig. 10.1: Dimensioned drawing of DDLS 508 40…, DDLS 508 120…

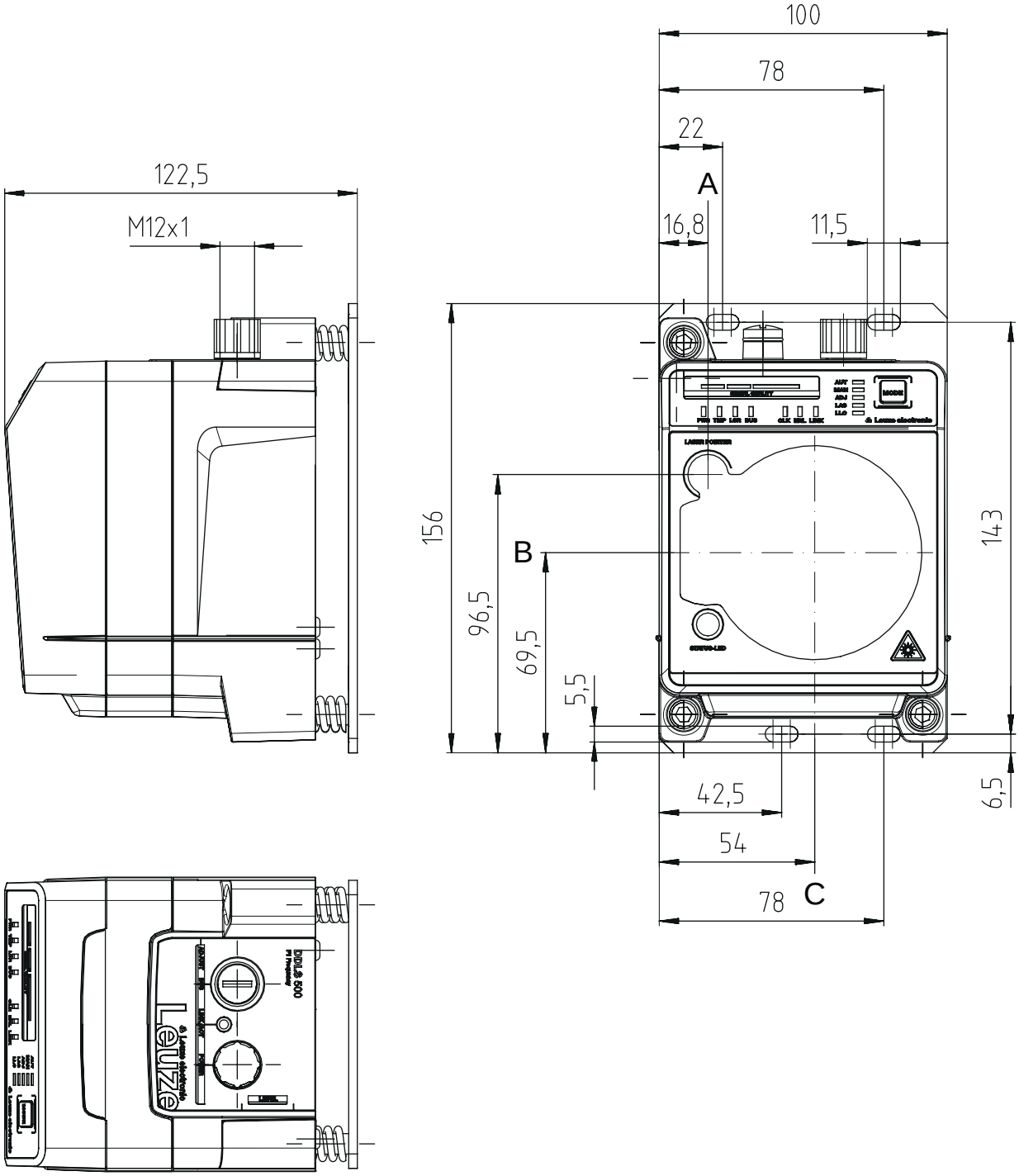

all dimensions in mm

A Center axis of transmitter and alignment laser

B Center axis of transmitter and receiver

C Center axis of receiver

Fig. 10.2: Dimensioned drawing of DDLS 508 200…

NOTICE	
	Installation for devices with an operating range of 200 m. ↳ Always install the **Frequency F4** device as **stationary device** for devices with an operating range of 200 m (DDLS 5XX **200**…).

10.3 Dimensional drawings: Accessories

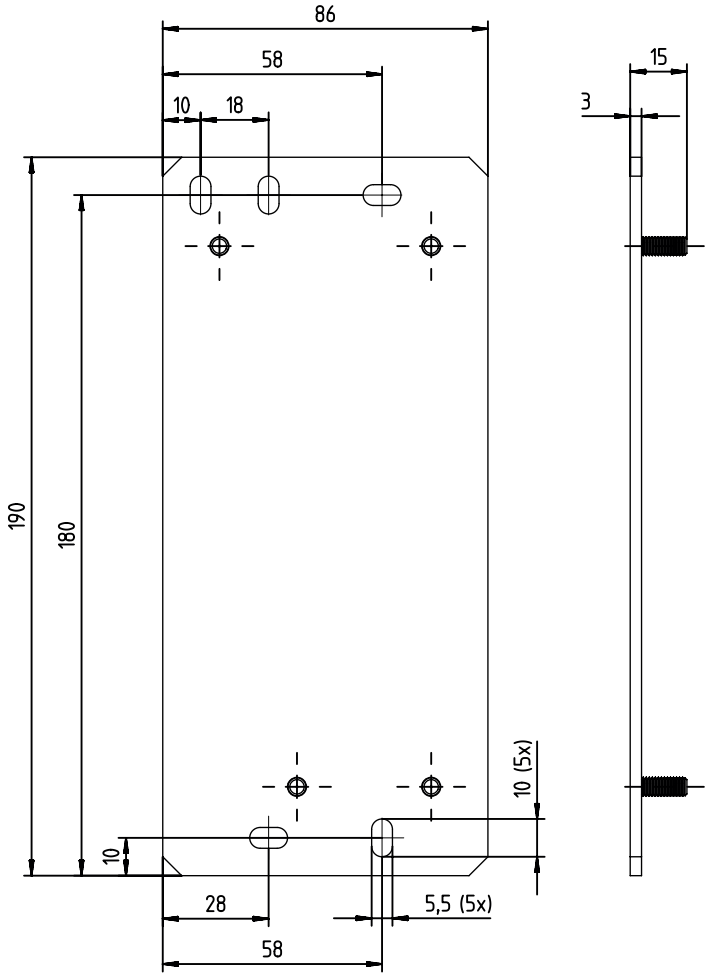

all dimensions in mm

Fig. 10.3: Dimensioned drawing of adapter plate for DDLS 200 replacement

ПРОМЭЛЕКТРОНИКА / sales@prom-elec.com

11 Order guide and accessories

11.1 Nomenclature

Part designation:

DDLS 5xx lll.f L H W

Tab. 11.1: Part number code

DDLS	Operating principle: optical transceiver for digital data transmission
5	Series: DDLS 500
xx	Interface: 08: 100 Mbit/s TCP/IP or UDP transmission
lll	Range for data transmission in m
f	Frequency of the transmitter: 3: Frequency F3 4: Frequency F4
L	Integrated alignment laser for mounting support (optional)
H	Integrated device heating (optional)
W	Transmission optics with larger opening angle (on request)

NOTICE

A list with all available device types can be found on the Leuze website at **www.leuze.com**.

11.2 Cables accessories

Tab. 11.2: Accessories – POWER connection cable (supply voltage)

Part no.	Part designation	Description
50132077	KD U-M12-5A-V1-020	Connection cable, M12 socket, axial plug outlet, open cable end, cable length 2 m, not shielded
50132079	KD U-M12-5A-V1-050	Connection cable, M12 socket, axial plug outlet, open cable end, cable length 5 m, not shielded
50132080	KD U-M12-5A-V1-100	Connection cable, M12 socket, axial plug outlet, open cable end, cable length 10 m, not shielded

Tab. 11.3: Accessories – Bus connection cable

Part no.	Part designation	Description
M12 plug for BUS, axial connector, open cable end		
50135073	KS ET-M12-4A-P7-020	Connection cable, length 2 m
50135074	KS ET-M12-4A-P7-050	Connection cable, length 5 m
50135075	KS ET-M12-4A-P7-100	Connection cable, length 10 m
50135076	KS ET-M12-4A-P7-150	Connection cable, length 15 m
50135077	KS ET-M12-4A-P7-300	Connection cable, length 30 m
M12 plug for BUS to RJ-45 connector		
50135080	KSS ET-M12-4A-RJ45-A-P7-020	Connection cable, length 2 m
50135081	KSS ET-M12-4A-RJ45-A-P7-050	Connection cable, length 5 m
50135082	KSS ET-M12-4A-RJ45-A-P7-100	Connection cable, length 10 m
50135083	KSS ET-M12-4A-RJ45-A-P7-150	Connection cable, length 15 m
50135084	KSS ET-M12-4A-RJ45-A-P7-300	Connection cable, length 30 m

11.3 Other accessories

Tab. 11.4: Accessories – Mounting aids

Part no.	Part designation	Description
50126757	BTX 0500 M	Adapter plate (rigid, not adjustable) with fastening material Additional adapter plate for mounting a device instead of an already mounted DDLS 200.

Tab. 11.5: Accessories – Connectors

Part no.	Part designation	Description
50020501	KD 095-5A	M12 socket, axial, A-coded for supply voltage, shielded
50108991	D-ET1	RJ45 plug, user-configurable / screw connections
50112155	S-M12A-ET	M12 plug, axial, D-coded, user-configurable / screw connections
50109832	KDS ET M12 / RJ45 W-4P	Converter from M12, D-coded, to RJ-45 socket

12 EC Declaration of Conformity

The optical data transmission systems of the DDLS 500 series were developed and manufactured in accordance with the applicable European standards and directives.

The manufacturer of the product, Leuze electronic GmbH + Co KG in D-73277 Owen, possesses a certified quality assurance system in accordance with ISO 9001.