Leuze electronic

the sensor people

BCL304i
Bar code reader

en 01-10/2011 50117112

TECHNICAL DESCRIPTION

ПРОМЭЛЕКТРОНИКА / sales@prom-elec.com

Leuze electronic

Leuze electronic GmbH + Co. KG
P.O. Box 1111, D-73277 Owen
Tel. +49(0)7021/573-0,
Fax +49(0)7021/573-199
info@leuze.de • www.leuze.com

Sales and Service

Germany

Sales Region North
Phone 07021/573-306
Fax 07021/9850950

Postal code areas
20000-38999
40000-65999
97000-97999

Sales Region South
Phone 07021/573-307
Fax 07021/9850911

Postal code areas
66000-96999

Sales Region East
Phone 035027/629-106
Fax 035027/629-107

Postal code areas
01000-19999
39000-39999
98000-99999

Worldwide

AR (Argentina)
Condelectric S.A.
Tel. Int. + 54 1148 361053
Fax Int. + 54 1148 361053

AT (Austria)
Schmachtl GmbH
Tel. Int. + 43 732 7646-0
Fax Int. + 43 732 7646-785

AU + NZ (Australia + New Zealand)
Balluff-Leuze Pty. Ltd.
Tel. Int. + 61 3 9720 4100
Fax Int. + 61 3 9738 2677

BE (Belgium)
Leuze electronic nv/sa
Tel. Int. + 32 2253 16-00
Fax Int. + 32 2253 15-36

BG (Bulgaria)
ATICS
Tel. Int. + 359 2 847 6244
Fax Int. + 359 2 847 6244

BR (Brasil)
Leuze electronic Ltda.
Tel. Int. + 55 11 5180-6130
Fax Int. + 55 11 5180-6141

CH (Switzerland)
Leuze electronic AG
Tel. Int. + 41 41 784 5656
Fax Int. + 41 41 784 5657

CL (Chile)
Imp. Tec. Vignola S.A.I.C.
Tel. Int. + 56 3235 11-11
Fax Int. + 56 3235 11-28

CN (China)
Leuze electronic Trading
(Shenzhen) Co. Ltd.
Tel. Int. + 86 755 862 64909
Fax Int. + 86 755 862 64901

CO (Colombia)
Componentes Electronicas Ltda.
Tel. Int. + 57 4 3511049
Fax Int. + 57 4 3511019

CZ (Czech Republic)
Schmachtl CZ s.r.o.
Tel. Int. + 420 244 0015-00
Fax Int. + 420 244 9107-00

DK (Denmark)
Leuze electronic Scandinavia ApS
Tel. Int. + 45 48 173200

ES (Spain)
Leuze electronic S.A.
Tel. Int. + 34 93 4097900
Fax Int. + 34 93 49035820

FI (Finland)
SKS-automaatio Oy
Tel. Int. + 358 20 764-61
Fax Int. + 358 20 764-6820

FR (France)
Leuze electronic Sarl.
Tel. Int. + 33 160 0512-20
Fax Int. + 33 160 0503-65

GB (United Kingdom)
Leuze electronic Ltd.
Tel. Int. + 44 14 8040 85-00
Fax Int. + 44 14 8040 38-08

GR (Greece)
UTECO A.B.E.E.
Tel. Int. + 30 211 1206 900
Fax Int. + 30 211 1206 999

HK (Hong Kong)
Sensortech Company
Tel. Int. + 852 26510188
Fax Int. + 852 26510388

HR (Croatia)
Tipteh Zagreb d.o.o.
Tel. Int. + 385 1 381 6574
Fax Int. + 385 1 381 6577

HU (Hungary)
Kvalix Automatika Kft.
Tel. Int. + 36 1 272 2242
Fax Int. + 36 1 272 2244

ID (Indonesia)
P.T. Yabestindo Mitra Utama
Tel. Int. + 62 21 92861859
Fax Int. + 62 21 6451044

IL (Israel)
Galoz electronics Ltd.
Tel. Int. + 972 3 9023456
Fax Int. + 972 3 9021990

IN (India)
M + V Marketing Sales Pvt Ltd.
Tel. Int. + 91 124 4121623
Fax Int. + 91 124 434233

IT (Italy)
Leuze electronic S.r.l.
Tel. Int. + 39 02 26 1106-43
Fax Int. + 39 02 26 1106-40

JP (Japan)
C. Ilies & Co., Ltd.
Tel. Int. + 81 3 3443 4143
Fax Int. + 81 3 3443 4118

KE (Kenia)
Profa-Tech Ltd.
Tel. Int. + 254 20 828095/6
Fax Int. + 254 20 828129

KR (South Korea)
Leuze electronic Co., Ltd.
Tel. Int. + 82 31 3828228
Fax Int. + 82 31 3828522

MK (Macedonia)
Tipteh d.o.o. Skopje
Tel. Int. + 389 70 399 474
Fax Int. + 389 23 174 197

MX (Mexico)
Movitren S.A.
Tel. Int. + 52 81 8371 8616
Fax Int. + 52 81 8371 8588

MY (Malaysia)
Ingermark (M) SDN.BHD
Tel. Int. + 60 360 3427-88
Fax Int. + 60 360 3421-88

NG (Nigeria)
SABROW HI-TECH E. & A. LTD.
Tel. Int. + 234 80333 86366
Fax Int. + 234 80333 84463518

NL (Netherlands)
Leuze electronic BV
Tel. Int. + 31 418 65 35-44
Fax Int. + 31 418 65 38-08

NO (Norway)
Elteco A/S
Tel. Int. + 47 35 56 20-70
Fax Int. + 47 35 56 20-99

PL (Poland)
Balluff Sp. z o. o.
Tel. Int. + 48 71 338 49 29
Fax Int. + 48 71 338 49 30

PT (Portugal)
LA2P, Lda.
Tel. Int. + 351 21 4 447070
Fax Int. + 351 21 4 447075

RO (Romania)
O BOYLE s.r.l
Tel. Int. + 40 2 56201346
Fax Int. + 40 2 56221036

RS (Republic of Serbia)
Tipteh d.o.o. Beograd
Tel. Int. + 381 11 3131 057
Fax Int. + 381 11 3018 326

RU (Russian Federation)
ALL IMPEX 2001
Tel. Int. + 7 495 9213012
Fax Int. + 7 495 6462092

SE (Sweden)
Leuze electronic Scandinavia ApS
Tel. Int. +46 380-490951

SG + PH (Singapore + Philippines)
Balluff Asia Pte Ltd
Tel. Int. + 65 6252 43-84
Fax Int. + 65 6252 90-60

SI (Slovenia)
Tipteh d.o.o.
Tel. Int. + 386 1200 51-50
Fax Int. + 386 1200 51-51

SK (Slowakia)
Schmachtl SK s.r.o.
Tel. Int. + 421 2 58275600
Fax Int. + 421 2 58275601

TH (Thailand)
Industrial Electrical Co. Ltd.
Tel. Int. + 66 2 642 6700
Fax Int. + 66 2 642 4250

TR (Turkey)
Leuze electronic San.ve Tic.Ltd.Sti.
Tel. Int. + 90 216 456 6704
Fax Int. + 90 216 456 3650

TW (Taiwan)
Great Cofue Technology Co., Ltd.
Tel. Int. + 886 2 2983 80-77
Fax Int. + 886 2 2985 33-73

UA (Ukraine)
SV Altera OOO
Tel. Int. + 38 044 4961888
Fax Int. + 38 044 4961818

US + CA (United States + Canada)
Leuze electronic, Inc.
Tel. Int. + 1 248 486-4466
Fax Int. + 1 248 486-6699

ZA (South Africa)
Countapulse Controls (PTY.) Ltd.
Tel. Int. + 27 116 1575-56
Fax Int. + 27 116 1575-13

11/2011

© All rights reserved, especially the right of reproduction, distribution and translation. Copying or reproductions in any form require the written consent of the manufacturer.
Product names used without guarantee of free usability.
Changes reflecting technical improvements may be made.

1 General information 12
1.1 Explanation of symbols 12
1.2 Declaration of conformity 12

2 Safety notices 13
2.1 General safety notices 13
2.2 Safety standards 13
2.3 Approved purpose 13
2.4 Working safely 14

3 Fast commissioning / operating principle 16
3.1 Mounting the BCL 304*i* 16
3.2 Device arrangement and selection of the mounting location 16
3.3 Electrical connectionBCL 304*i* 17
3.4 Starting the device 19
3.5 Bar code reading 21

4 Device description 22
4.1 About the bar code readers of the BCL 300*i* series 22
4.2 Characteristics of the bar code readers of the BCL 300*i* series 23
4.3 Device construction 25
4.4 Reading techniques 28
4.4.1 Line scanner (single line) 28
4.4.2 Line scanner with oscillating mirror 29
4.4.3 Raster scanner (Raster Line) 30
4.5 Fieldbus systems 31
4.5.1 PROFIBUS DP 31
4.6 Heater 31
4.7 autoReflAct 32
4.8 Reference codes 32
4.9 autoConfig 33

5 Specifications 34

5.1 General specifications of the bar code readers 34
5.1.1 Line scanner / raster scanner 34
5.1.2 Oscillating-mirror scanner 36
5.1.3 Line scanner / raster scanner with deflection mirror 36

5.2 Heating models of the bar code readers 37
5.2.1 Line scanner / raster scanner with heater 38
5.2.2 Oscillating-mirror scanner with heating 38
5.2.3 Line scanner / raster scanner with deflection mirror and heating 39

5.3 Dimensioned drawings 40
5.3.1 Dimensioned drawing of complete overview of the BCL 304*i* with MS 3xx / MK 3xx 40
5.3.2 Dimensioned drawing of line scanner with / without heating 41
5.3.3 Dimensioned drawing of deflection mirror scanner with / without heating 42
5.3.4 Dimensioned drawing of oscillating-mirror scanner with / without heating 43
5.3.5 Dimensioned drawing of MS 3xx hood with integrated connectors / MK 3xx terminal hood 44

5.4 Reading field curves / optical data 45
5.4.1 Bar code characteristics 45
5.4.2 Raster scanner 46

5.5 Reading field curves 47
5.5.1 High Density (N) - optics: BCL 304*i* S/R1 N 102 (H) 48
5.5.2 High Density (N) - optics: BCL 304*i* S/R1 N 100 (H) 48
5.5.3 High Density (N) - optics: BCL 304*i* ON 100 (H) 49
5.5.4 Medium Density (M) - optics: BCL 304*i* S/R1 M 102 (H) 50
5.5.5 Medium Density (M) - optics: BCL 304*i* S/R1 M 100 (H) 50
5.5.6 Medium Density (M) - optics: BCL 304*i* OM 100 (H) 51
5.5.7 Low Density (F) - optics: BCL 304*i* S/R1 F 102 (H) 52
5.5.8 Low Density (F) - optics: BCL 304*i* S/R1 F 100 (H) 52
5.5.9 Low Density (F) - optics: BCL 304*i* OF 100 (H) 53
5.5.10 Ultra Low Density (L) - optics: BCL 304*i* S/R1 L 102 (H) 54
5.5.11 Ultra Low Density (L) - optics: BCL 304*i* S/R1 L 100 (H) 54
5.5.12 Ultra Low Density (L) - optics: BCL 304*i* OL 100 (H) 55

6 Installation and mounting ... 56

6.1 Storage, transportation ... 56

6.2 Mounting the BCL 304*i* ... 57
6.2.1 Fastening with M4 x 5 screws ... 57
6.2.2 BT 56 mounting device ... 58
6.2.3 BT 59 mounting device ... 60

6.3 Device arrangement ... 61
6.3.1 Selecting a mounting location ... 61
6.3.2 Avoiding total reflection – Line scanner ... 62
6.3.3 Avoiding total reflection – deflection mirror scanner ... 62
6.3.4 Avoiding total reflection – oscillating-mirror scanner ... 63
6.3.5 Mounting location ... 63
6.3.6 Devices with integrated heating ... 64
6.3.7 Possible reading angles between BCL 304*i* and bar code. ... 64

6.4 Cleaning ... 65

7 Electrical connection ... 66

7.1 Safety notices for the electrical connection ... 67

7.2 Electrical connectionBCL 304*i* ... 68
7.2.1 MS 304 hood with 3 integrated M12 connectors ... 68
7.2.2 MK 304 terminal hood with spring-loaded terminals ... 69

7.3 Detailed description of the connections ... 71
7.3.1 PWR / SW IN/OUT - Voltage supply and switching input/outputs 1 and 2 ... 71
7.3.2 SERVICE – USB interface (Mini-B type) ... 74
7.3.3 HOST / BUS IN for BCL 304*i* ... 75
7.3.4 BUS OUT for the BCL 304*i* ... 76
7.3.5 PROFIBUS termination ... 77

7.4 Cable lengths and shielding ... 77

8 Display elements and display ... 78

8.1 LED indicators BCL 304*i* ... 78

8.2 Display BCL 304*i* ... 80

9 Leuze webConfig tool ... 82

9.1 Connecting the SERVICE USB interface ... 82

9.2 Installing the required software ... 83

9.2.1 System requirements ... 83

9.2.2 Installing the USB driver ... 83

9.3 Starting the webConfig tool ... 84

9.4 Short description of the webConfig tool ... 85

9.4.1 Module overview in the Configuration menu ... 85

10 Commissioning and configuration ... 87

10.1 General information on the PROFIBUS implementation of the BCL 304*i* ... 87
10.1.1 Communication profile ... 87
10.1.2 Bus-access protocol ... 87
10.1.3 Device types ... 88
10.1.4 Expanded DP functions ... 88
10.1.5 Automatic baud rate detection ... 89

10.2 Measures to be performed prior to the initial commissioning ... 90

10.3 Setting of the PROFIBUS address ... 91

10.4 Commissioning via the PROFIBUS ... 92
10.4.1 General information ... 92
10.4.2 Preparing the control system for consistent data transmission ... 92
10.4.3 General information on the GSD file ... 93
10.4.4 Permanently defined parameters / device parameters ... 94

10.5 Overview of the project modules ... 98

10.6 Decoder modules ... 101
10.6.1 Modules 1-4 – Code table extensions 1 to 4 ... 101
10.6.2 Module 5 – Code type features (symbology) ... 103
10.6.3 Module 7 – Code fragment technology ... 104

10.7 Control modules ... 105
10.7.1 Module 10 – Activations ... 105
10.7.2 Module 11 – Reading gate control ... 107
10.7.3 Module 12 – Multi-label ... 109
10.7.4 Module 13 – Fragmented read result ... 110
10.7.5 Module 14 – Interlinked read result ... 111

10.8 Result Format ... 112
10.8.1 Module 20 – Decoder state ... 112
10.8.2 Modules 21-27 – Decoding result ... 114
10.8.3 Module 30 – Data formatting ... 116
10.8.4 Module 31 – Reading gate number ... 117
10.8.5 Module 32 – Reading gate time ... 117
10.8.6 Module 33 – Code position ... 118
10.8.7 Module 34 – Reading reliability (equal scans) ... 118
10.8.8 Module 35 – Bar code length ... 119
10.8.9 Module 36 – Scans with information ... 119
10.8.10 Module 37 – Decoding quality ... 120
10.8.11 Module 38 – Code direction ... 120
10.8.12 Module 39 – Number of digits ... 121
10.8.13 Module 40 – Code type ... 121
10.8.14 Module 41 – Code position in the swivel range ... 122

10.9 Data Processing ... 123
10.9.1 Module 50 – Characteristics filter ... 123
10.9.2 Module 51 – Data filtering ... 125

10.10 Identifier ... 126
10.10.1 Module 52 – Segmentation according to the EAN process ... 126
10.10.2 Module 53 – Segmentation via fixed positions ... 127
10.10.3 Module 54 – Segmentation according to identifier and separator ... 130
10.10.4 Module 55 – String handling parameters ... 132

10.11 Device Functions ... 133
10.11.1 Module 60 – Device status ... 133
10.11.2 Module 61 – Laser control ... 134
10.11.3 Module 63 – Alignment ... 135
10.11.4 Module 64 – Oscillating mirror ... 136

10.12 SWIO 1 and SWIO 2 switching inputs / outputs ... 137
10.12.1 Parameters for operating as an output ... 137
10.12.2 Parameters for operating as an input ... 139
10.12.3 Switch-on and switch-off functions for operation as an output ... 140
10.12.4 Input functions for operation as an input ... 141
10.12.5 Module 70 – Switching input/output SWIO1 ... 141
10.12.6 Module 71 – Switching input/output SWIO2 ... 143
10.12.7 Module 74 – SWIO status and control ... 145

10.13 Data output ... 147
10.13.1 Module 80 – ... 147

10.14 Reference code comparison ... 148
10.14.1 Module 81 – Reference code comparator 1 ... 148
10.14.2 Module 82 – Reference code comparator 2 ... 150
10.14.3 Module 83 – Reference code comparison pattern 1 ... 152
10.14.4 Module 84 – Reference code comparison pattern 2 ... 153

10.15 Special Functions ... 154
10.15.1 Module 90 – Status and control ... 154
10.15.2 Module 91 – AutoReflAct (automatic reflector activation) ... 155
10.15.3 Module 92 – AutoControl ... 156

10.16 Example configuration: Indirect activation via the PLC ... 157
10.16.1 Task ... 157
10.16.2 Procedure ... 157

10.17 Sample configuration: Direct activation via the switching input ... 159
10.17.1 Task ... 159
10.17.2 Procedure ... 159

11 Diagnostics and troubleshooting ... 161

11.1 General causes of errors ... 161

11.2 Interface errors ... 161

12 Type overview and accessories ... 163
12.1 Part number code ... 163
12.2 Type overview BCL 304*i* ... 163
12.3 Connection hood accessories ... 164
12.4 Accessory terminating resistor ... 165
12.5 Accessory connectors ... 165
12.6 Accessory USB cable ... 165
12.7 Accessory mounting device ... 165
12.8 Reflector accessories for autoReflAct ... 165
12.9 Accessory ready-made cables for voltage supply ... 166
12.9.1 Contact assignment of PWR connection cable ... 166
12.9.2 Specifications of the cables for voltage supply ... 166
12.9.3 Order codes of the cables for voltage supply ... 166
12.10 Accessory ready-made cables for bus connection ... 166
12.10.1 General information ... 166
12.10.2 Contact assignments of PROFIBUS connection cable KB PB ... 167
12.10.3 Technical data of interface connection cables ... 167
12.10.4 Order code interface connection cable ... 168

13 Maintenance ... 169
13.1 General maintenance information ... 169
13.2 Repairs, servicing ... 169
13.3 Disassembling, packing, disposing ... 169

14 Appendix ... 170
14.1 Declaration of Conformity ... 170
14.2 ASCII character set ... 172
14.3 Bar code samples ... 176
14.3.1 Module 0.3 ... 176
14.3.2 Module 0.5 ... 177

Figure 2.1: Attachment of the stick-on labels with warning notices at the BCL 304*i* ... 15
Figure 3.1: BCL 304*i* - MS 304 hood with integrated M12 connectors ... 17
Figure 3.2: BCL 304*i* - MK 304 terminal hood with spring-loaded terminals ... 18
Figure 3.3: Cable fabrication for MK 304 terminal hood ... 18
Figure 4.1: Line scanner, line scanner with deflection mirror and oscillating-mirror scanner ... 22
Figure 4.2: Possible bar code orientation ... 24
Figure 4.3: BCL 304*i* device construction - line scanner ... 25
Figure 4.4: BCL 304*i* device construction -line scanner with deflection mirror ... 25
Figure 4.5: BCL 304*i* device construction - oscillating-mirror scanner ... 26
Figure 4.6: Device construction MS 304 hood with integrated connectors ... 27
Figure 4.7: Device construction MK 304 hood with integrated connectors ... 27
Figure 4.8: Deflection principle for the line scanner ... 28
Figure 4.9: Deflection principle for the line scanner with oscillating mirror add-on ... 29
Figure 4.10: Deflection principle for the raster scanner ... 30
Figure 4.11: PROFIBUS DP ... 31
Figure 4.12: Reflector arrangement for autoReflAct ... 32
Table 5.1: Specifications of the BCL 304*i* line/raster scanners without heating ... 34
Table 5.2: Specifications of the BCL 304*i* oscillating-mirror scanners without heating ... 36
Table 5.3: Specifications of the BCL 304*i* deflection-mirror scanners without heating ... 36
Table 5.4: Specifications of the BCL 304*i* line/raster scanners with heating ... 38
Table 5.5: Specifications of the BCL 304*i* oscillating-mirror scanners with heating ... 38
Table 5.6: Specifications of the BCL 304*i* deflection mirror scanners with heating ... 39
Figure 5.1: Dimensioned drawing of complete overview of the BCL 304*i* with MS 3xx / MK 3xx ... 40
Figure 5.2: Dimensioned drawing BCL 304*i* line scanner S…102 ... 41
Figure 5.3: Dimensioned drawing BCL 304*i* deflection mirror scanner S…100 ... 42
Figure 5.4: Dimensioned drawing BCL 304*i* oscillating mirror scanner O…100 ... 43
Figure 5.5: Dimensioned drawing of MS 3xx hood with integrated connectors / MK 3xx terminal hood ... 44
Figure 5.6: The most important characteristics of a bar code ... 45
Table 5.7: Raster line cover as a function of the distance ... 46
Figure 5.7: Zero position of the reading distance ... 47
Table 5.8: Reading conditions ... 47
Figure 5.8: "High Density" reading field curve for line scanner without deflection mirror ... 48
Figure 5.9: "High Density" reading field curve for line scanner with deflection mirror ... 48
Figure 5.10: "High Density" reading field curve for oscillating-mirror scanners ... 49
Figure 5.11: Lateral "High Density" reading field curve for oscillating-mirror scanners ... 49
Figure 5.12: "Medium Density" reading field curve for line scanner without deflection mirror ... 50
Figure 5.13: "Medium Density" reading field curve for line scanner with deflection mirror ... 50
Figure 5.14: "Medium Density" reading field curve for oscillating-mirror scanners ... 51
Figure 5.15: Lateral "Medium Density" reading field curve for oscillating-mirror scanners ... 51
Figure 5.16: "Low Density" reading field curve for line scanner without deflection mirror ... 52
Figure 5.17: "Low Density" reading field curve for line scanner with deflection mirror ... 52
Figure 5.18: "Low Density" reading field curve for oscillating-mirror scanners ... 53
Figure 5.19: Lateral "Low Density" reading field curve for oscillating-mirror scanners ... 53
Figure 5.20: "Ultra Low Density" reading field curve for line scanner without deflection mirror ... 54
Figure 5.21: "Ultra Low Density" reading field curve for line scanner with deflection mirror ... 54
Figure 5.22: "Ultra Low Density" reading field curve for oscillating-mirror scanners ... 55
Figure 5.23: Lateral "Ultra Low Density" reading field curve for oscillating-mirror scanners ... 55
Figure 6.1: Device name plate BCL 304*i* ... 56

Figure 6.2: Fastening options using M4x5 threaded holes ... 57
Figure 6.3: BT 56 mounting device ... 58
Figure 6.4: Mounting example of BCL 304*i* with BT 56 ... 59
Figure 6.5: BT 59 mounting device ... 60
Figure 6.6: Total reflection – line scanner ... 62
Figure 6.7: Total reflection – line scanner ... 62
Figure 6.8: Total reflection – BCL 304*i* with oscillating mirror ... 63
Figure 6.9: Reading angle for the line scanner ... 64
Figure 7.1: Location of the electrical connections ... 66
Figure 7.2: BCL 304*i* - MS 304 hood with integrated M12 connectors ... 68
Figure 7.3: BCL 304*i* - MK 304 terminal hood with spring-loaded terminals ... 69
Figure 7.4: Cable fabrication for MK 304 terminal hood ... 70
Table 7.1: Pin assignment PWR / SW IN/OUT ... 71
Figure 7.1: Switching input connection diagram SWIO_1 and SWIO_2 ... 72
Figure 7.2: Switching output connection diagram SWIO_1 / SWIO_2 ... 73
Table 7.2: Pin assignment SERVICE – Mini-B type USB interface ... 74
Table 7.3: Pin assignment HOST / BUS IN BCL 304*i* ... 75
Table 7.4: Pin assignment BUS OUTBCL 304*i* ... 76
Table 7.5: Cable lengths and shielding ... 77
Figure 8.1: BCL 304*i* - LED indicators ... 78
Figure 8.2: BCL 304*i* - Display ... 80
Figure 9.1: Connecting the SERVICE USB interface ... 82
Figure 9.2: The start page of the webConfig tool ... 84
Figure 9.3: Module overview in the webConfig tool ... 85
Table 10.1: PROFIBUS bus-access processes ... 87
Table 10.2: PROFIBUS DP master and slave types ... 88
Table 10.3: Services for DPVM1 class 1 and slaves ... 88
Table 10.4: Services for DPVM1 class 2 and slaves ... 89
Figure 10.1: BCL 304*i* - MS 304 hood with integrated M12 connectors ... 90
Figure 10.2: BCL 304*i* - MK 304 terminal hood with spring-loaded terminals ... 90
Figure 10.3: BCL 304*i* - setting of the PROFIBUS address ... 91
Table 10.5: "Common" Parameters ... 94
Table 10.6: Module overview ... 99
Table 10.7: Parameters for modules 1-4 ... 101
Table 10.8: Parameters for module 5 ... 103
Table 10.9: Parameters for module 7 ... 104
Table 10.10: Parameters for module 10 ... 105
Table 10.11: Output data for module 10 ... 105
Table 10.12: Parameters for module 11 ... 107
Table 10.13: Parameters for module 12 ... 109
Table 10.14: Input data for module 12 ... 109
Table 10.15: Parameters for module 13 ... 110
Table 10.16: Input data for module 13 ... 110
Table 10.17: Parameters for module 13 ... 111
Table 10.18: Input data for module 20 ... 112
Table 10.19: Input data for modules 21 … 27 ... 114
Table 10.20: Parameters for module 30 ... 116
Table 10.21: Input data for module 31 ... 117

Table 10.22: Input data for module 32 ... 117
Table 10.23: Input data for module 33 ... 118
Table 10.24: Input data for module 34 ... 118
Table 10.25: Input data for module 35 ... 119
Table 10.26: Input data for module 36 ... 119
Table 10.27: Input data for module 37 ... 120
Table 10.28: Input data for module 38 ... 120
Table 10.29: Input data for module 39 ... 121
Table 10.30: Input data for module 40 ... 121
Table 10.31: Input data for module 41 ... 122
Table 10.32: Parameters for module 50 ... 123
Table 10.33: Parameters for module 51 ... 125
Table 10.34: Parameters for module 52 ... 126
Table 10.35: Parameters for module 53 ... 127
Table 10.36: Parameters for module 54 ... 130
Table 10.37: Parameters for module 55 ... 132
Table 10.38: Input data for module 60 ... 133
Table 10.39: Output data for module 60 ... 133
Table 10.40: Parameters for module 61 ... 134
Table 10.41: Input data for module 63 ... 135
Table 10.42: Output data for module 63 ... 135
Table 10.43: Parameters for module 64 ... 136
Figure 10.4: Example 1: Start-up delay > 0 and switch-on time = 0 ... 137
Figure 10.5: Example 2: Start-up delay > 0 and switch-on time > 0 ... 137
Figure 10.6: Example 3: start-up delay > 0 switch-off signal prior to lapsing of the start-up delay ... 138
Figure 10.7: Start-up delay in input mode ... 139
Figure 10.8: Switch-on time in input mode ... 139
Figure 10.9: Switch-off delay in input mode ... 140
Table 10.44: Switch-on/switch-off functions ... 140
Table 10.45: Input functions ... 141
Table 10.46: Parameters for module 70 – Input/Output 1 ... 141
Table 10.47: Parameters for module 71 – Input/Output 2 ... 143
Table 10.48: Input data for module 74 Input/output status and control ... 145
Table 10.49: Output data for module 74 Input/output status and control ... 146
Table 10.50: Parameters for module 80 ... 147
Table 10.51: Parameters for module 81 – Reference code comparison ... 148
Table 10.52: Parameters for module 82 – Reference code comparison ... 150
Table 10.53: Parameter module 83 – Reference code comparison pattern ... 152
Table 10.54: Parameter module 84 – Reference code comparison pattern ... 153
Table 10.55: Input data for module 90 – Status and control ... 154
Table 10.56: Parameters for module 91 – AutoreflAct ... 155
Table 10.57: Parameters for module 92 – AutoControl ... 156
Table 10.58: Input data for module 92 – AutoControl ... 156
Table 10.59: Device parameters for example configuration 2 ... 159
Table 11.1: General causes of errors ... 161
Table 11.2: Interface error ... 161
Table 12.2: Type overview BCL 304*i* ... 163
Table 12.3: Connection hoods for the BCL 304*i* ... 164

Table 12.4: Terminating resistor for the BCL 304*i* 165
Table 12.5: Connectors for the BCL 304*i* 165
Table 12.6: Service cable for the BCL 304*i* 165
Table 12.7: Mounting devices for the BCL 304*i* 165
Table 12.8: Reflector for autoReflAct operation 165
Table 12.9: PWR cables for the BCL 304*i* 166
Figure 12.10: Cable configuration PROFIBUS/multiNet plus connection cables 167
Table 12.11: Interface connection cable for the BCL 304*i* 168
Figure 14.1: Declaration of conformity BCL 304*i* 170
Figure 14.2: Connection hood / connector unit declaration of conformity 171
Figure 14.3: Bar code sample labels (module 0.3) 176
Figure 14.4: Bar code sample labels (module 0.5) 177

1 General information

1.1 Explanation of symbols

The symbols used in this technical description are explained below.

Attention!

This symbol precedes text messages which must strictly be observed. Failure to comply with this information results in injuries to personnel or damage to the equipment.

Attention Laser!

This symbol warns of possible danger caused by hazardous laser radiation.

Notice!

This symbol indicates text passages containing important information.

1.2 Declaration of conformity

The bar code readers of the BCL 300*i* series have been developed and manufactured in accordance with the applicable European standards and directives.

Notice!

You can find the Declaration of Conformity of the devices in the appendix of the manual on page 145.

The manufacturer of the product, Leuze electronic GmbH & Co KG in D-73277 Owen, possesses a certified quality assurance system in accordance with ISO 9001.

2 Safety notices

2.1 General safety notices

Documentation

All entries in this technical description must be heeded, in particular the present chapter "Safety notices". Keep this technical description in a safe place. It should be available at all times.

Safety regulations

Observe the locally applicable regulations and the rules of the employer's liability insurance association.

Repair

Repairs must only be carried out by the manufacturer or an authorized representative.

2.2 Safety standards

The bar code readers of the BCL 300*i* series were developed, manufactured and tested in accordance with the applicable safety standards. They correspond to the state of the art.

2.3 Approved purpose

Attention!

The protection of personnel and the device cannot be guaranteed if the device is operated in a manner not corresponding to its intended use.

Bar code readers of the BCL 300*i* series are conceived as stationary, high-speed scanners with integrated decoders for all current bar codes used for automatic object detection.

In particular, unauthorized uses include:

- in rooms with explosive atmospheres
- operation for medical purposes

Areas of application

The bar code readers of the BCL 300*i* series are especially designed for the following areas of application:

- Storage technology and materials handling, in particular for object identification on fast-moving transport systems
- Pallet transport systems
- Automobile sector
- Omnidirectional reading

2.4 Working safely

Attention!

Access and changes to the device, except where expressly described in this operating manual, are not authorized.

Safety regulations

Observe the locally applicable legal regulations and the rules of the employer's liability insurance association.

Qualified personnel

Mounting, commissioning and maintenance of the device must only be carried out by qualified personnel.
Electrical work must be carried out by a certified electrician.

Attention, laser radiation!

If you look into the beam path over a longer time period, the retina of your eye may be damaged!

Never look directly into the beam path!

Do not point the laser beam of the BCL 304i at persons!

When mounting and aligning the BCL 304i, avoid reflections of the laser beam off reflective surfaces!

The BCL 304i bar code readers correspond to the EN 60825-1 safety standard for a class 2 laser systems. They also comply with the U.S. 21 CFR 1040.10 regulations for a class II laser product except for deviations pursuant to Laser Notice No. 50, dated July 26, 2001.

Radiant Energy: The BCL 304i uses a low power visible laser diode. The emitted wavelength is 655 nm. The average laser power is less than 1 mW in accordance with the definition of laser class 2.

Adjustments: Do not attempt any adjustments to or alterations of this product.

Do not remove the protective housing of the bar code reader. There are no user-serviceable parts inside.

The glass optics cover is the only aperture through which laser radiation may be observed on this product. A failure of the scanner motor, while the laser diode continues to emit a laser beam, may cause emission levels to exceed those for safe operation. The bar code reader has protective devices to prevent this occurrence. If, however, a stationary beam is emitted, the failing bar code reader should be disconnected from the voltage supply immediately.

CAUTION: Use of controls or adjustments or performance of procedures other than specified herein may result in hazardous light exposure.

The use of optical instruments or devices in combination with the device increases the danger of eye damage!

The housing of the BCL 304i is provided with warning notices A and B above and next to the reading window as shown in the following figure:

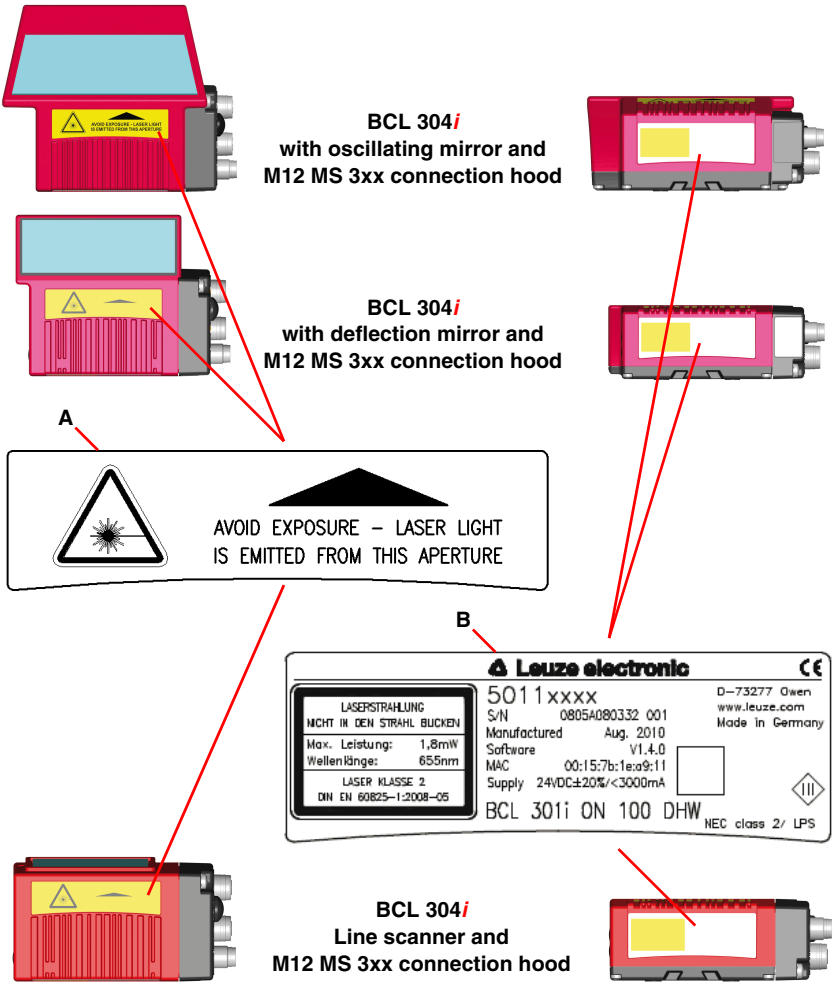

A	Warning: laser aperture
B	Name plate

Figure 2.1: Attachment of the stick-on labels with warning notices at the BCL 304*i*

3 Fast commissioning / operating principle

Below you will find a short description for the initial commissioning of the BCL 304*i*. Detailed explanations for all listed points can be found throughout this technical description.

3.1 Mounting the BCL 304*i*

The BCL 304*i* bar code readers can be mounted in two different ways:

- Via four M4x6 screws on the bottom of the device.
- Via a BT 56 mounting device in the fastening groove on the bottom of the housing.

3.2 Device arrangement and selection of the mounting location

In order to select the right mounting location, several factors must be considered:

- Size, orientation, and position tolerance of the bar codes on the objects to be scanned.
- The reading field of the BCL 304*i* in relation to the bar code module width.
- The resulting minimum and maximum reading distance from the respective reading field.
- The permissible cable lengths between the BCL 304*i* and the host system depending on which interface is used.
- The correct time for data output. The BCL 304*i* should be positioned in such a way that, taking into consideration the time required for data processing and the conveyor belt speed, there is sufficient time to e.g. initiate sorting operations on the basis of the read data.
- The display and control panel should be very visible and accessible.
- For configuring and commissioning with the webConfig tool, the USB interface should be easily accessible.

For specific information, please refer to chapter 6 and chapter 7.

Notice!

The beam exits the BCL 304i as follows for the respective devices:
*- line scanner **parallel** to the **housing base***
*- deflection mirror **105 degrees** to the **housing base***
*- oscillating mirror **perpendicular** to the **housing base.***
The black areas in figure 6.2 are the housing base. The best read results are obtained when:

- *The BCL 304i is mounted in such a way that the scanning beam is incident on the bar code at an angle of inclination greater than ±10° … 15° to vertical.*
- *The reading distance lies in the middle area of the reading field.*
- *The bar code labels are of good print quality and have good contrast ratios.*
- *You do not use high-gloss labels.*
- *There is no direct sunlight.*

3.3 Electrical connectionBCL 304*i*

For the electrical connection of the BCL 304*i*, 2 connection variants are available.

The **voltage supply** (18 … 30 VDC) is connected acc. to the connection type selected.

2 freely programmable switching inputs/outputs for individual adaptation to the respective application are also available here. Detailed information on this topic can be found in chapter 7.4.1 and chapter 7.4.3.

MS 304 hood with 2 integrated M12 connectors

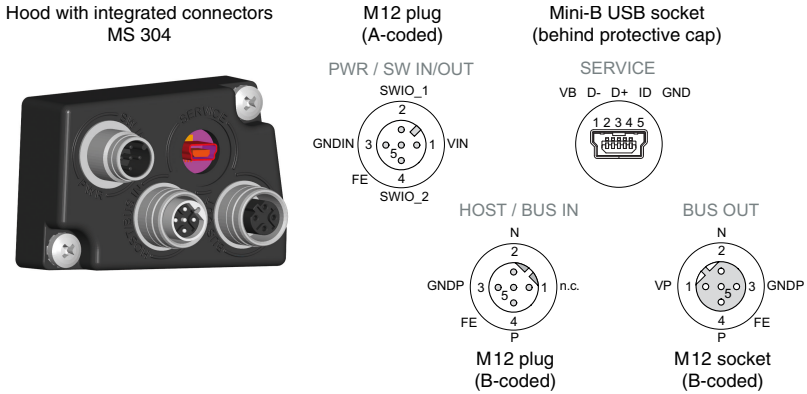

Figure 3.1: BCL 304*i* - MS 304 hood with integrated M12 connectors

Notice!

The shielding connection is done via the M12 connector housing.

Notice!

PROFIBUS address 126 is set by default in the MS 304.
The integrated parameter memory for the simple replacement of the BCL 304i is located in the MS 304.

Notice!

The PROFIBUS is looped through the MS 304, i.e. the bus is not interrupted when the BCL 304i is removed from the MS 304.
The bus is terminated at BUS OUT via an external mounted terminating resistor (see chapter 13.4 "Accessory terminating resistor").

MK 304 terminal hood with spring-loaded terminals

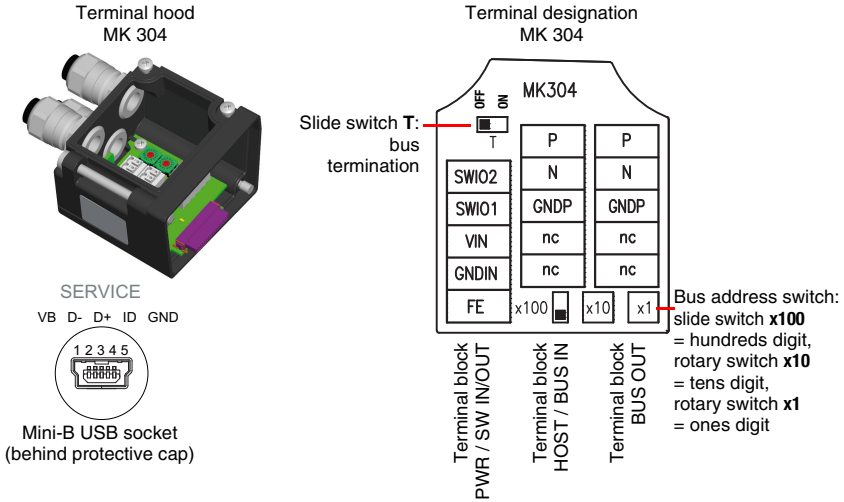

Figure 3.2: BCL 304*i* - MK 304 terminal hood with spring-loaded terminals

Notice!

PROFIBUS address 126 is set by default in the MK 304.
The integrated parameter memory for simple exchange of the BCL 304i is located in the MK 304.

Notice!

*The PROFIBUS is looped through the MK 304, i.e. the bus is not interrupted when the BCL 304i is removed from the MK 304. The PROFIBUS is terminated via slide switch **T** in the MK 304. If the termination is activated (slide switch **T** in the **ON** position), the downstream bus is disconnected.*

Cable fabrication and shielding connection

Remove approx. 78 mm of the connection cable sheathing. 15 mm of sheath of the shielded line must be freely accessible.

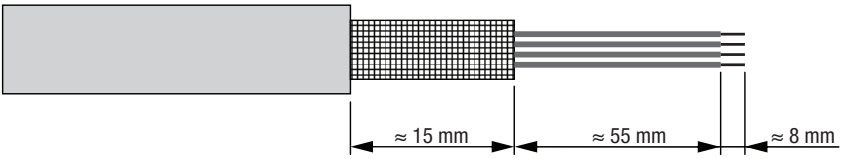

Figure 3.3: Cable fabrication for MK 304 terminal hood

The shield is automatically contacted when the cable is lead into the metal screw fitting and fastened when the cord grip is closed. Then lead the individual wires into the terminals according to the diagram. Wire end sleeves are not necessary.

3.4 Starting the device

- *Set the PROFIBUS address of the BCL304i in your PROFIBUS network via the address switch (one slide and two rotary switches) provided for this purpose in the MS 304 or MK 304.*
- *Install the GSD file associated with the BCL 304i in the PROFIBUS Manager of your control.*
- *Activate the desired modules (at least module 10 and one of the modules 21 … 27).*
- *Store the slave address for the BCL 304i in the PROFIBUSmanager. Ensure that the address is the same as the address configured in the device.*
- *Connect the +18 … 30 VDC supply voltage (typ. +24 VDC).*

The BCL 304*i* starts up, the **PWR** and **BUS** LEDs display the operating state. If there is a display, the bar code reading window appears in it.

PWR LED

PWR	**flashes green**	**Device ok, initialization phase**
PWR	**green continuous light**	**Device ok**
PWR	**green, briefly off - on**	**Good read, successful reading**
PWR	**green, briefly off - briefly red - on**	**No read, reading not successful**
PWR	**orange continuous light**	**Service mode**
PWR	**flashes red**	**Warning set**
PWR	**red continuous light**	**Device error / parameter enable**

BUS LED

BUS	**flashes green**	**Initialization**
BUS	**green continuous light**	**Bus operation ok**
BUS	**flashes red**	**Communication error**
BUS	**red continuous light**	**Bus error**

If a display is available, the following information appears successively during startup:

- `Startup`
- Device designation e.g. `BCL 304i SM 102 D`
- `Reading Result`

If `Reading Result` is displayed, the device is ready.

Operation of BCL 304i

After voltage (18 … 30 VDC) has been connected to the switching input, a read process is activated. In the standard setting, the **2/5 interleaved** code type is enabled. The decoding result module (21-27) must be configured and the BCL 304*i* must be connected to the PROFIBUS.

If a code is led through the reading field, the code content is decoded and passed to the PLC via the PROFIBUS.

3.5 Bar code reading

To test, you can use the following bar code in the 2/5 Interleaved format. The bar code module here is 0.5:

Provided your BCL 304*i* model has a display, the read information appears on this display. The **PWR** LED goes off briefly and then turns green again. Simultaneously, the read information is forwarded to the superior system (PLC/PC) via the PROFIBUS.

Please check the incoming data of the bar code information there.

Alternatively, you can use a switching input for read activation (switching signal of a photoelectric sensor or 24 V DC switching signal).

4 Device description

4.1 About the bar code readers of the BCL 300*i* series

Bar code readers of the BCL 300*i* series are high-speed scanners with integrated decoder for all commonly used bar codes, e.g. 2/5 Interleaved, Code 39, Code 128, EAN 8/13 etc., as well as codes from the GS1 DataBar family.

Bar code readers of the BCL 300*i* series are available in various optics models as well as line scanners, line scanners with deflection mirrors, oscillating mirrors and also optionally as heated models.

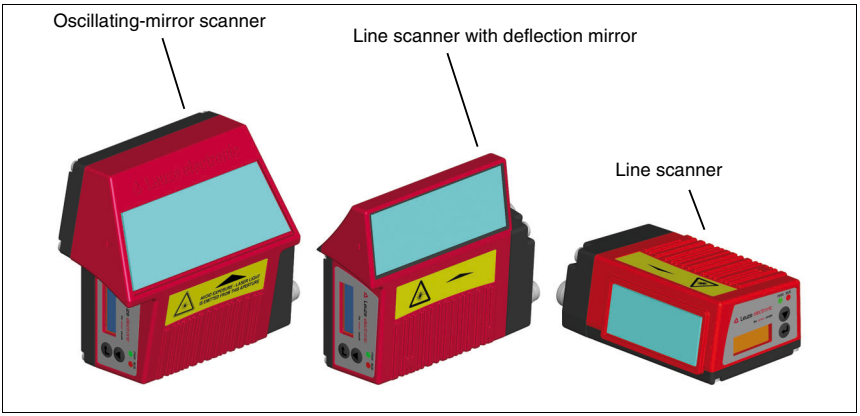

Figure 4.1: Line scanner, line scanner with deflection mirror and oscillating-mirror scanner

The extensive options for device configuration enable adaptation to a multitude of reading tasks. Due to the large reading distance combined with the great depth of field, a large opening angle and a very compact construction, the device is ideally suited for the conveyor and storage technology market.

The interfaces (**RS 232**, **RS 485** and **RS 422**) integrated in the various device models and the fieldbus systems (**PROFIBUS DP**, **PROFINET-IO** and **Ethernet**) offer optimum connection to the superior host system.

4.2 Characteristics of the bar code readers of the BCL 300*i* series

Performance characteristics:

- Integrated fieldbus connectivity = *i* -> Plug-and-Play fieldbus coupling and easy networking
- Numerous interface variants facilitate connection to the superior systems
  - RS 232, RS 422
  - RS 485 and multiNet plus slave

  alternatively, various fieldbus systems, such as
  - PROFIBUS DP
  - PROFINET-IO
  - EtherNet
- Integrated code fragment technology (**CRT**) enables the identification of soiled or damaged bar codes
- Maximum depth of field and reading distances from 30 mm to 700 mm
- Large optical opening angle and, thus, large reading field width
- High scanning rate of 1000 scans/s for fast reading tasks
- On request with display to easily detect and activate functions and status messages.
- Integrated USB service interface, Mini-B type
- Easy alignment- and diagnostics functions
- Up to four possible connection technologies
- Two freely programmable switching inputs/outputs for the activation or signaling of states
- Automatic monitoring of the read quality with **autoControl**
- Automatic recognition and setting of the bar code type using **autoConfig**
- Reference code comparison
- Optional heating models to -35 °C
- Heavy-duty housing of protection class IP 65

Notice!

Information on technical data and characteristics can be found in Kapitel 5.

General information

The integrated fieldbus connectivity = *i* contained in the bar code readers of the BCL 300*i* series facilitates the use of identification systems which function without connector unit or gateways. The integrated fieldbus interface considerably simplifies handling. The Plug-and-Play concept enables easy networking and very simple commissioning: Directly connect the respective fieldbus and all configuration is performed with no additional software.

For decoding bar codes, the bar code readers of the BCL 300*i* series make available the proven **CRT decoder** with code fragment technology:

The proven code fragment technology (**CRT**) enables bar code readers of the BCL 300*i* series to read bar codes with a small bar height, as well as bar codes with a damaged or soiled print image.

With the aid of the **CRT decoder**, bar codes can also be read without problem in other demanding situations, such as with a large tilt angle (azimuth angle or even twist angle).

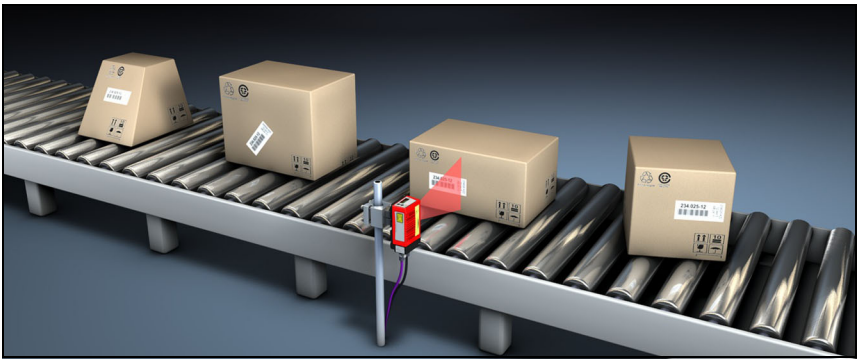

Figure 4.2: Possible bar code orientation

With the BCL 304*i*, configuration is generally performed with the aid of the GSD file.

The BCL 304*i* needs a suitable activation to start a read process as soon as an object is in the reading field. This opens a time window ("reading gate") in the BCL 304*i* for the read process during which the bar code reader has time to detect and decode a bar code.

Alternative activation options include online commands via the host interface and the In the basic setting, triggering takes place through an external reading cycle signal or via the PROFIBUS. An alternative option for activation is the **autoReflAct** function.

Through the read operation, the BCL 304*i* collects additional useful pieces of data for diagnosis which can also be transmitted to the host. The quality of the read operation can be inspected using the **alignment mode** which is integrated in the webConfig tool.

An optional display in English with buttons is used to operate the BCL 304*i* as well as for visualization purposes. Two LEDs provide additional optical information on the current operating state of the device.

The two freely configurable switching inputs/outputs **SWIO1** and **SWIO2** can be assigned various functions and control e.g. activation of the BCL 304*i* or external devices, such as a PLC.

System, warning and error messages provide assistance in setup/troubleshooting during commissioning and read operation.

4.3 Device construction

BCL 304i bar code readers

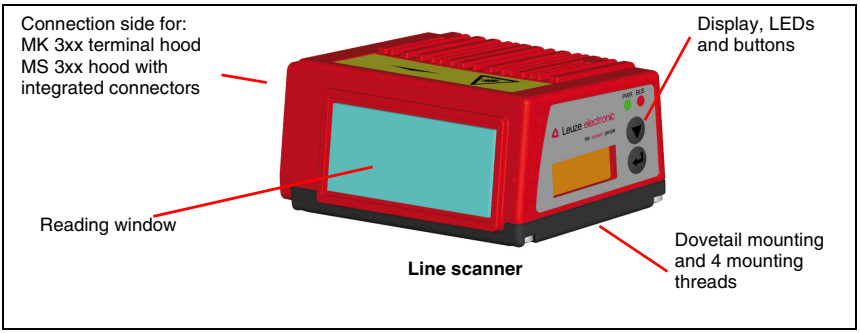

Figure 4.3: BCL 304*i* device construction - line scanner

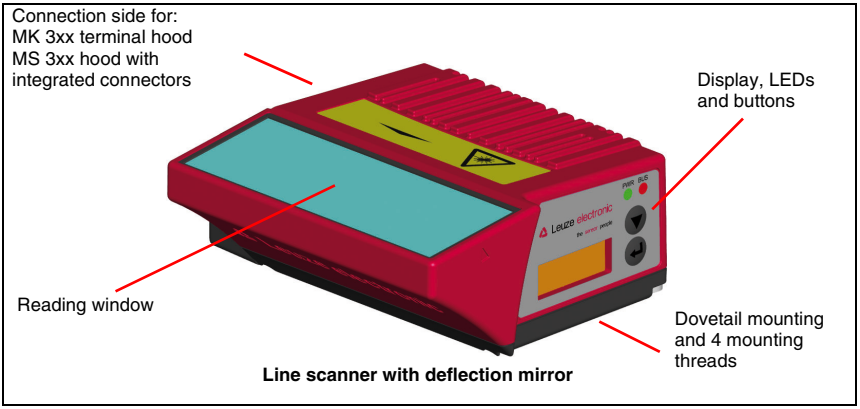

Figure 4.4: BCL 304*i* device construction -line scanner with deflection mirror

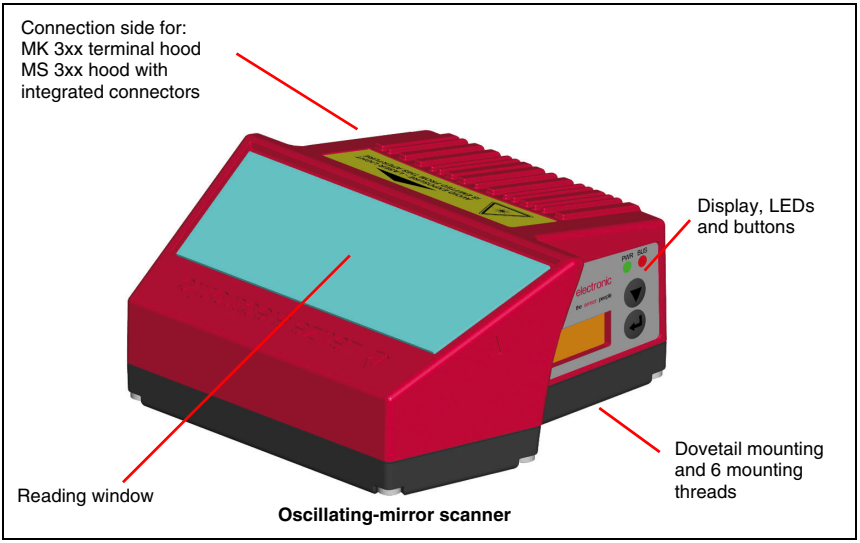

Figure 4.5: BCL 304*i* device construction - oscillating-mirror scanner

MS 304 hood with integrated connectors

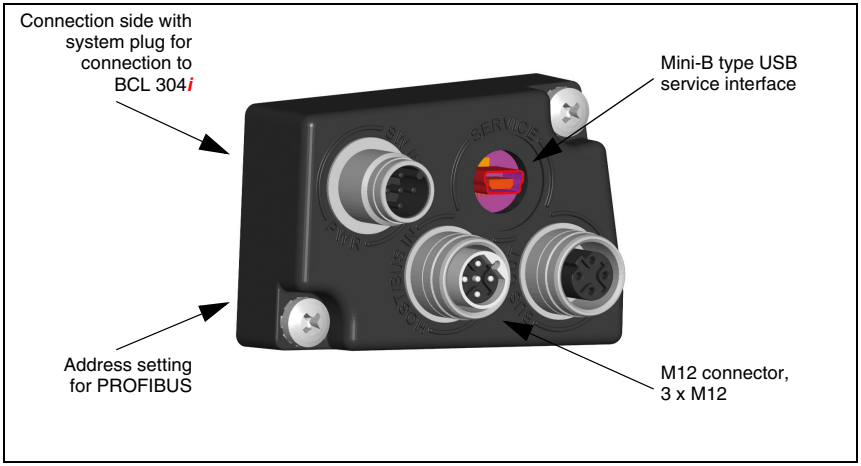

Figure 4.6: Device construction MS 304 hood with integrated connectors

MK 304 terminal hood

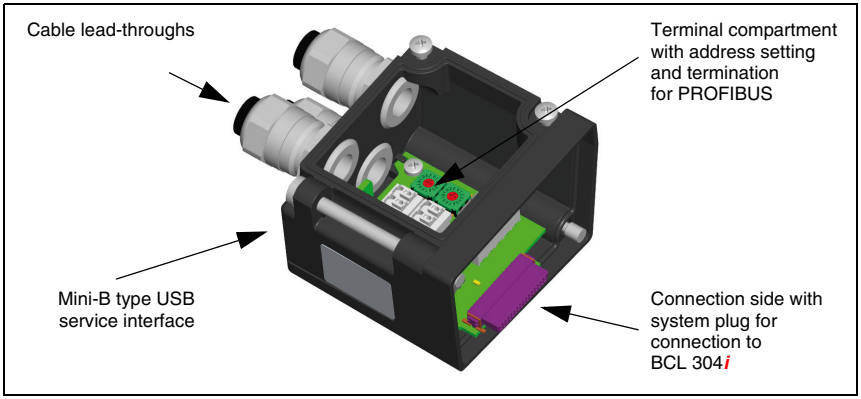

Figure 4.7: Device construction MK 304 hood with integrated connectors

4.4 Reading techniques

4.4.1 Line scanner (single line)

A line (scan line) scans the label. Due to the opt. opening angle, the reading field width is dependent on the read distance. Through the movement of the object, the entire bar code is automatically transported through the scan line.

The integrated code fragment technology permits twisting of the bar code (tilt angle) within certain limits. These are dependent on the transport speed, the scanning rate of the scanner and the bar code properties.

Areas of application of the line scanner

The line scanner is used:

- when the bars of the bar code are printed in the conveying direction ('ladder arrangement').
- with bar codes having very short bar lengths.
- when the ladder code is turned out of the vertical position (tilt angle).
- when the reading distance is large.

Figure 4.8: Deflection principle for the line scanner

4.4.2 Line scanner with oscillating mirror

The oscillating mirror deflects the scan line additionally to both sides across the scan direction at a randomly adjustable oscillation frequency. In this way, the BCL 304*i* can also scan larger areas or spaces for bar codes. The reading field height (and the scan line length useful for evaluation) depends on the reading distance due to the optical opening angle of the oscillating mirror.

Areas of application of the line scanner with oscillating mirror

For line scanners with oscillating mirror, oscillation frequency, start/stop position etc. are adjustable. It is used:

- when the position of the label is not fixed, e.g. on pallets – various labels can, thus, be detected at various positions.
- when the bars of the bar code are printed perpendicular to the conveying direction ('picket fence arrangement').
- when reading stationary objects.
- when a large reading field (reading window) has to be covered.

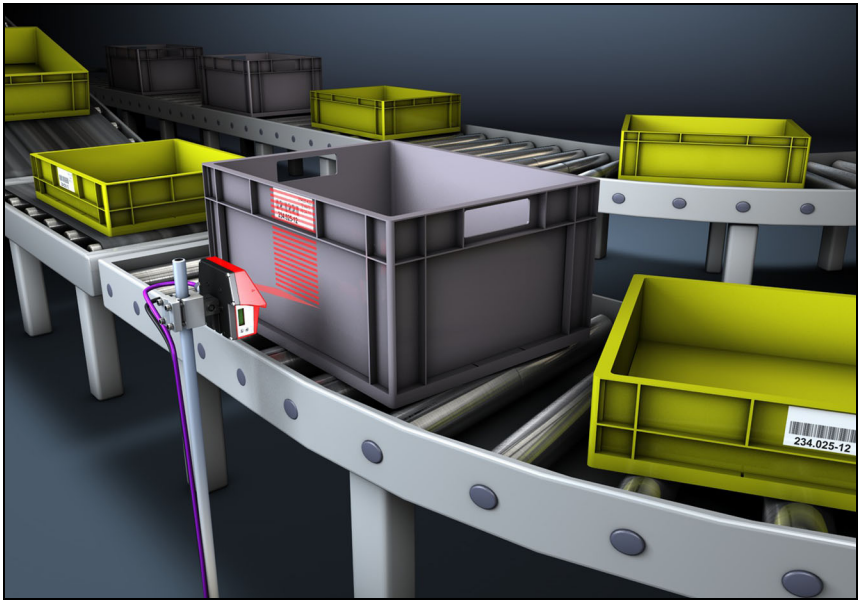

Figure 4.9: Deflection principle for the line scanner with oscillating mirror add-on

4.4.3 Raster scanner (Raster Line)

Multiple scan lines scan the label. Due to the optical opening angle, the reading field width is dependent on the reading distance. Provided the code is located in the reading field, it can be read during standstill. If the code moves through the reading field, it is scanned by multiple scan lines.

The integrated code fragment technology permits twisting of the bar code (tilt angle) within certain limits. These are dependent on the transport speed, the scanning rate of the scanner and the bar code properties. In most cases, everywhere a line scanner is used, a raster scanner can be used.

Areas of application of the raster scanner:

The raster scanner is used:

- when the bars of the bar code are perpendicular to the conveying direction ('picket fence arrangement')
- with bar codes with low height displacement
- with very glossy bar codes

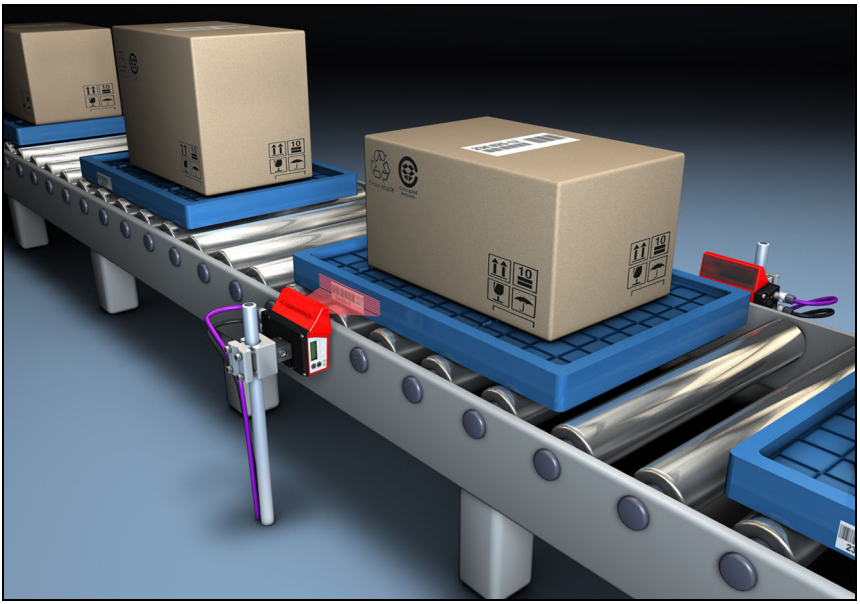

Figure 4.10: Deflection principle for the raster scanner

4.5 Fieldbus systems

Various product variants of the BCL 300*i* series are available for connecting to different fieldbus systems such as PROFIBUS DP, ProfiNet and Ethernet.

4.5.1 PROFIBUS DP

The BCL 304*i* is designed as a PROFIBUS device (PROFIBUS DP-V1 acc. to IEC 61158) with a baud rate of max. 12MBd. The functionality of the device is defined via parameter sets which are clustered in modules. These modules are contained in a GSD file.

The BCL 304*i* bar code readers can be operated as network devices on the PROFIBUS. The BCL 304*i* features multiple M12 connectors / sockets for the electrical connection of the supply voltage, the interface and the switching inputs and outputs.

The BCL 304*i* supports:

- PROFIBUS-DP slave functionality.
- Modular structure of the IO data
- Automatic baud rate detection up to 12 Mbit/s
- SYNC/FREEZE
- FailSafe Mode
- Device-specific diagnostic data
- I&M
- No changing of the slave address via the PROFIBUS

For further details, see Kapitel 10!

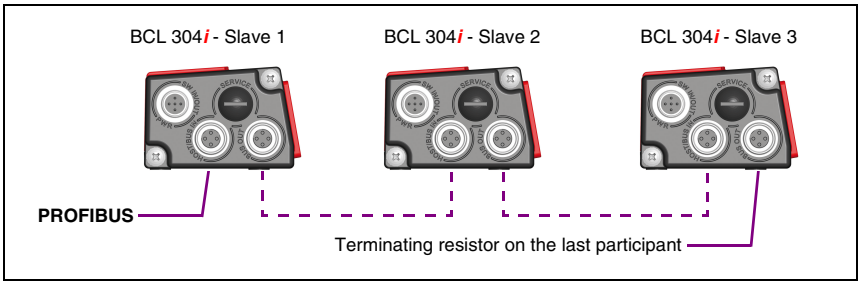

Figure 4.11: PROFIBUS DP

4.6 Heater

For low-temperature applications to min. -35°C (e.g. in cold storage), the bar code readers of the BCL 304*i* series can optionally be permanently fitted with a built-in heating and these bar code readers purchased as separate device models.

4.7 autoReflAct

AutoReflAct stands for **Auto**matic **Refl**ector **Act**ivation and permits an activation without additional sensors. This is achieved by directing the scanner with reduced scanning beam towards a reflector mounted behind the conveyor path.

Notice!

Compatible reflectors are available on request.

As long as the scanner is targeted at the reflector, the reading gate remains closed. If, however, the reflector is blocked by an object such as a container with a bar code label, the scanner activates the read procedure, and the label on the container is read. When the path from the scanner to the reflector has cleared, the read procedure has completed and the scanning beam is reduced and again directed onto the reflector. The reading gate is closed.

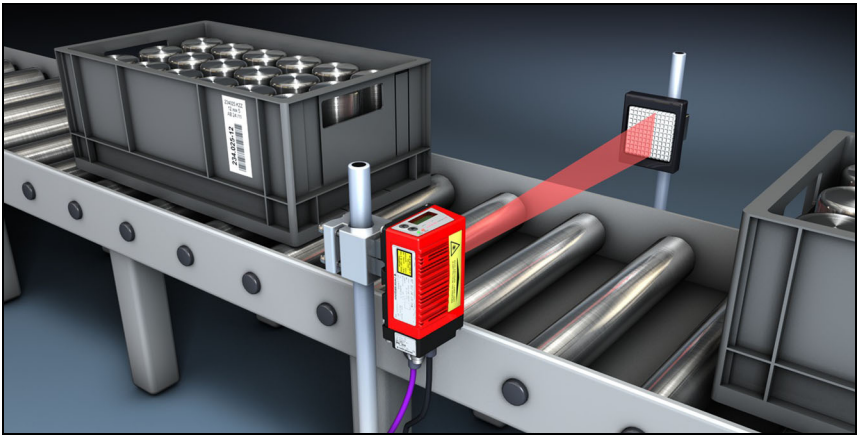

Figure 4.12: Reflector arrangement for autoReflAct

The **autoReflAct** function uses the scanning beam to simulate a photoelectric sensor and thus permits an activation without additional sensor system.

4.8 Reference codes

The BCL 304*i* offers the possibility of storing one or two reference codes.

It is possible to store the reference codes via the webConfig tool or via the PROFIBUS.

The BCL 304*i* can compare read bar codes with one and/or both reference codes and execute user-configurable functions depending on the comparison result.

4.9 autoConfig

With the autoConfig function, the BCL 304*i* offers the user who only wishes to simultaneously read one code type (symbology) with one number of digits an extremely simple and convenient configuration option.

After starting the autoConfig function via the switching input or from a superior control, it is sufficient to position a bar code label with the desired code type and number of digits in the reading field of the BCL 304*i*.

Afterward, bar codes with the same code type and number of digits are recognized and decoded.

5 Specifications

5.1 General specifications of the bar code readers

5.1.1 Line scanner / raster scanner

Type	BCL 304*i* PROFIBUS DP
Type	**Line scanner without heating**
Optical data	
Light source	Laser diode λ = 655nm (red light)
Beam exit	Front
Scanning rate	1000 scans/s
Beam deflection	by means of rotating polygon wheel
Useful opening angle	max. 60°
Optics models / resolution	High Density (**N**): 0.127 … 0.20mm Medium Density (**M**): 0.20 … 0.5mm Low Density (**F**): 0.30 … 0.5mm Ultra Low Density (**L**): 0.35 … 0.8mm
Reading distance	see reading field curves
Laser class	2 (acc. to EN 60825-1 and 21 CFR 1040.10 with Laser Notice No. 50)
Bar code data	
Code types	2/5 Interleaved, Code 39, Code 128, EAN 128, EAN / UPC, Codabar, Code 93, GS1 Data Bar, EAN Addendum
Bar code contrast (PCS)	>= 60%
External light tolerance	2000 lx (on the bar code)
Number of bar codes per scan	3
Electrical data	
Interface type	1x RS 485 at 2x M12 (B)
Protocols	PROFIBUS DP
Baud rate	9.6Kbaud … 12MBaud
Data formats	Slave DPV1
Service interface	Mini-B type USB 2.0 socket
Switching input / switching output	2 switching inputs/outputs, freely programmable functions - Switching input: 18 … 30VDC depending on supply voltage, I max. = 8mA - Switching output: 18 … 30VDC, depending on supply voltage, I max. = 60mA (short-circuit proof) Switching inputs/outputs protected against polarity reversal!
Operating voltage	18 … 30VDC (Class 2, safety class III)
Power consumption	max. 3W
Operating and display elements	
Display	monochromatic graphical display, 128 x 32 pixel, with background lighting
Keyboard	2 buttons
LEDs	2 LEDs for power (PWR) and bus state (BUS), two-colored (red/green)

Table 5.1: Specifications of the BCL 304*i* line/raster scanners without heating

Type	BCL 304*i* PROFIBUS DP
Type	**Line scanner without heating**
Mechanical data	
Protection class	IP 65 [1)]
Weight	270 g (without connection hood)
Dimensions (WxHxD)	44 x 95 x 68 mm (without connection hood)
Housing	diecast aluminum
Environmental data	
Operating temperature range	0 °C … +40 °C
Storage temperature range	-20 °C … +70 °C
Air humidity	max. 90 % rel. humidity, non-condensing
Vibration	IEC 60068-2-6, test FC
Shock	IEC 60068-2-27, test Ea
Continuous shock	IEC 60068-2-29, test Eb
Electromagnetic compatibility	EN 55022; IEC 61000-6-2 (contains IEC 61000-4-2, -3, -4, -5 and -6) [2)]

Table 5.1: Specifications of the BCL 304*i* line/raster scanners without heating

1) only with the MS 304 or MS 304 connection hood and screwed-on M 12 connectors or cable lead-throughs and mounted caps. Minimum tightening torque of the housing connection screws on the connection hood 1.4 Nm!

2) This is a Class A product. In a domestic environment this product may cause radio interference, in which case the operator may be required to take adequate measures.

Attention!

For UL applications, use is permitted exclusively in Class 2 circuits according to NEC (National Electric Code).

The BCL 304i bar code readers are designed in accordance with safety class III for supply by PELV (protective extra-low voltage).

5.1.2 Oscillating-mirror scanner

Technical data same as for line scanner without heating with the following differences:

Type	BCL 304*i* PROFIBUS DP
Type	**Oscillating-mirror scanner without heating**
Optical data	
Beam exit	Lateral zero position at an angle of 90°
Beam deflection	Via rotating polygon wheel (horizontal) and stepping motor with mirror (vertical)
Oscillation frequency	0 … 10Hz (adjustable, max. frequency is dependent on set swivel angle)
Max. swivel angle	±20°(adjustable)
Reading field height	see reading field curves
Electrical data	
Power consumption	max. 4.2W
Mechanical data	
Weight	580g (without connection hood)
Dimensions (WxHxD)	58 x 125 x 110mm (without connection hood)

Table 5.2: Specifications of the BCL 304*i* oscillating-mirror scanners without heating

5.1.3 Line scanner / raster scanner with deflection mirror

Technical data same as for line scanner without heating with the following differences:

Type	BCL 304*i* PROFIBUS DP
Type	**Line scanner with deflection mirror without heating**
Optical data	
Beam exit	Lateral zero position at an angle of 105°
Beam deflection	Via rotating polygon wheel (horizontal) and deflection mirror (vertical)
Electrical data	
Power consumption	max. 3W
Mechanical data	
Weight	350g (without connection hood)
Dimensions (WxHxD)	44 x 103 x 96mm (without connection hood)

Table 5.3: Specifications of the BCL 304*i* deflection-mirror scanners without heating

5.2 Heating models of the bar code readers

The BCL 304*i* bar code readers are optionally available as models with integrated heating. In this case, heating is permanently installed ex works. Self-installation on-site by the user is not possible!

Features

- Integrated heating (permanently installed)
- Extends the application range of the BCL 304*i* to -35°C
- Supply voltage 24VDC ±20%
- BCL 304*i* enabling through an internal temperature switch (switch-on delay about 30min for 24VDC and minimum ambient temperature of -35°C)
- Necessary conductor cross-section for the voltage supply: at least 0.75mm²; the use of ready-made cables is, thus, not possible

Construction

The heating consists of two parts:

- The front cover heater
- The housing heater

Function

When the 24VDC supply voltage is applied to the BCL 304*i*, a temperature switch initially only connects the heating to current (front cover heater and housing heater). During the heating phase (around 30min), when the inside temperature rises above 15°C, the temperature switch connects the BCL 304*i* to the supply voltage. This is followed by the self test and the changeover to read operation. The "**PWR**" LED lights up, showing overall readiness for operation.

When the inside temperature reaches approximately 18 °C, another temperature switch turns the housing heater off and, if necessary, back on again (if the inside temperature drops below 15°C). This does not interrupt the read operation. The front cover heater remains activated until an inside temperature of 25°C is reached. At temperatures above this, the front cover heater switches off and, with a switching hysteresis of 3°C, back on again at an inside temperature below 22°C.

Mounting location

Notice!

The mounting location is to be selected such that it does not expose the BCL 304i with heating directly to a cold air stream. To achieve an optimal heating effect, the BCL 304i should be mounted so that it is thermally isolated.

Electrical connection

The required core cross section of the connection cable for the voltage supply must be at least 0.75 mm².

Attention!

The voltage supply must not be looped through from one device to the next.

Power consumption

The energy requirement depends on the model:

- the line/raster scanner with heating typically consumes a maximum of 17W power.
- the line scanner with oscillating mirror and heating typically consumes a maximum of 26W power.
- the line/raster scanner with deflection mirror and heating typically consumes a maximum of 19W power.

These values are based on operation with unconnected switching outputs.

5.2.1 Line scanner / raster scanner with heater

Technical data same as for line scanner without heating with the following differences:

Type	**BCL 304*i*** PROFIBUS DP
Type	**Line scanner with heater**
Electrical data	
Operating voltage	24VDC ±20%
Power consumption	max. 17W
Structure of the heating	Housing heating and separate heating of the optics glass
Warmup time	Min. 30min at +24VDC and an ambient temperature of -35°C
Min. conductor cross section	Conductor cross section of at least 0.75mm² for the supply voltage supply line. Wiring through of the voltage supply to multiple heating devices is **not** permissible. Standard, M12 ready-made cable **not** usable (insufficient cable cross-section)
Environmental data	
Operating temperature range	-35°C … +40°C
Storage temperature range	-20°C … +70°C

Table 5.4: Specifications of the BCL 304*i* line/raster scanners with heating

5.2.2 Oscillating-mirror scanner with heating

Technical data same as for line scanner without heating with the following differences:

Type	**BCL 304*i*** PROFIBUS DP
Type	**Oscillating-mirror scanner with heating**
Optical data	
Useful opening angle	max. 60°
Max. swivel angle	± 20°(adjustable)

Table 5.5: Specifications of the BCL 304*i* oscillating-mirror scanners with heating

Type	BCL 304*i* PROFIBUS DP
Type	**Oscillating-mirror scanner with heating**
Electrical data	
Operating voltage	24VDC ±20%
Power consumption	max. 26W
Structure of the heating	Housing heating and separate heating of the optics glass
Warmup time	Min. 30min at +24VDC and an ambient temperature of -35°C
Min. conductor cross section	Conductor cross section of at least 0.75mm² for the supply voltage supply line. Wiring through of the voltage supply to multiple heating devices is **not** permissible. Standard, M12 ready-made cable **not** usable (insufficient cable cross-section)
Environmental data	
Operating temperature range	-35°C … +40°C
Storage temperature range	-20°C … +70°C

Table 5.5: Specifications of the BCL 304*i* oscillating-mirror scanners with heating

5.2.3 Line scanner / raster scanner with deflection mirror and heating

Technical data same as for line scanner without heating with the following differences:

Type	BCL 304*i* PROFIBUS DP
Type	**Deflection mirror scanner with heating**
Optical data	
Useful opening angle	max. 60°
Max. adjustment range	±10°(adjustable via display or software)
Electrical data	
Operating voltage	24VDC ±20%
Power consumption	max. 19W
Structure of the heating	Housing heating and separate heating of the optics glass
Warmup time	Min. 30min at +24VDC and an ambient temperature of -35°C
Min. conductor cross section	Conductor cross section of at least 0.75mm² for the supply voltage supply line. Wiring through of the voltage supply to multiple heating devices is **not** permissible. Standard, M12 ready-made cable **not** usable (insufficient cable cross-section)
Environmental data	
Operating temperature range	-35°C … +40°C
Storage temperature range	-20°C … +70°C

Table 5.6: Specifications of the BCL 304*i* deflection mirror scanners with heating

5.3 Dimensioned drawings

5.3.1 Dimensioned drawing of complete overview of the BCL 304*i* with MS 3xx / MK 3xx

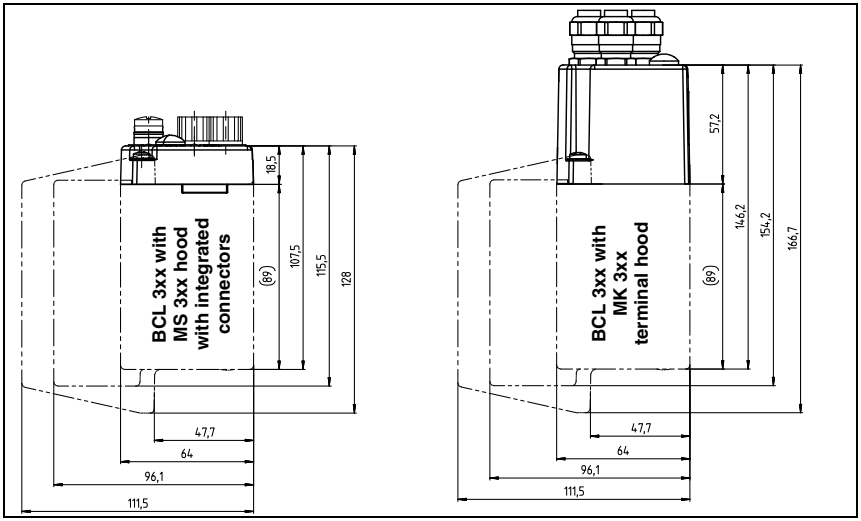

Figure 5.1: Dimensioned drawing of complete overview of the BCL 304*i* with MS 3xx / MK 3xx

5.3.2 Dimensioned drawing of line scanner with / without heating

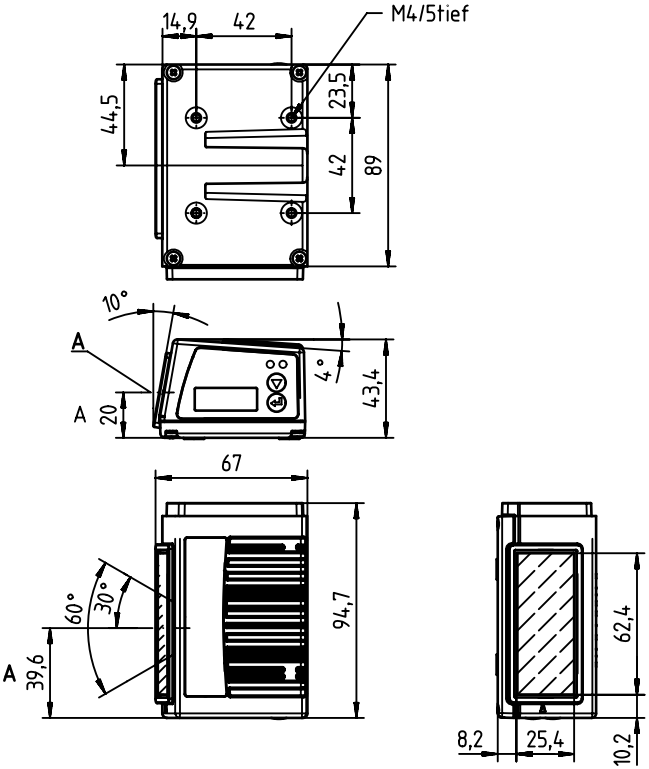

A Optical axis

Figure 5.2: Dimensioned drawing BCL 304*i* line scanner S…102

5.3.3 Dimensioned drawing of deflection mirror scanner with / without heating

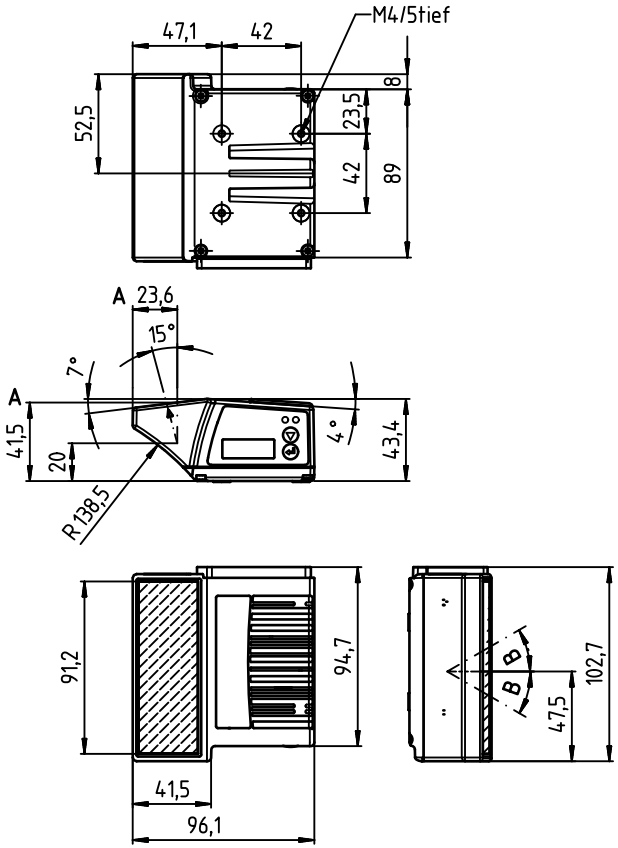

A Optical axis
B Deflection angle of the laser beam: ± 30°

Figure 5.3: Dimensioned drawing BCL 304*i* deflection mirror scanner S…100

5.3.4 Dimensioned drawing of oscillating-mirror scanner with / without heating

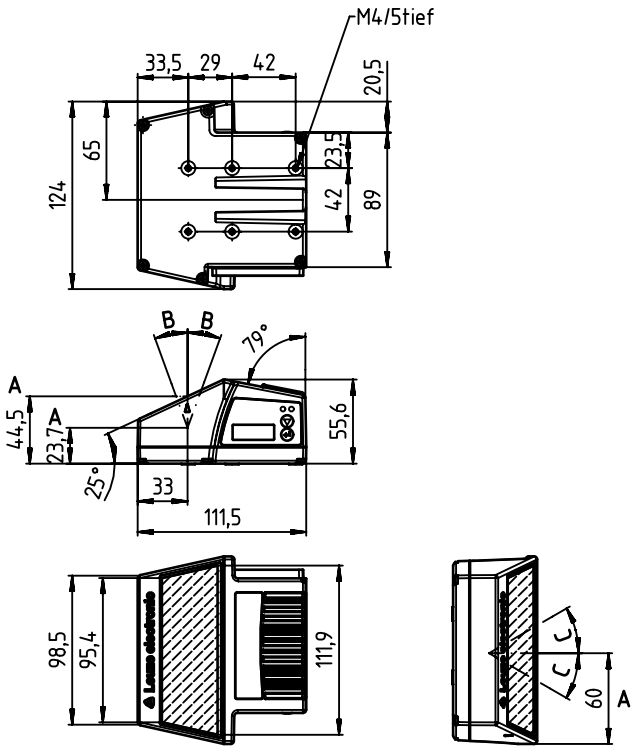

A Optical axis
B Swivel angle of the laser beam: ± 20°
C Deflection angle of the laser beam: ± 30°

Figure 5.4: Dimensioned drawing BCL 304*i* oscillating mirror scanner O…100

5.3.5 Dimensioned drawing of MS 3xx hood with integrated connectors / MK 3xx terminal hood

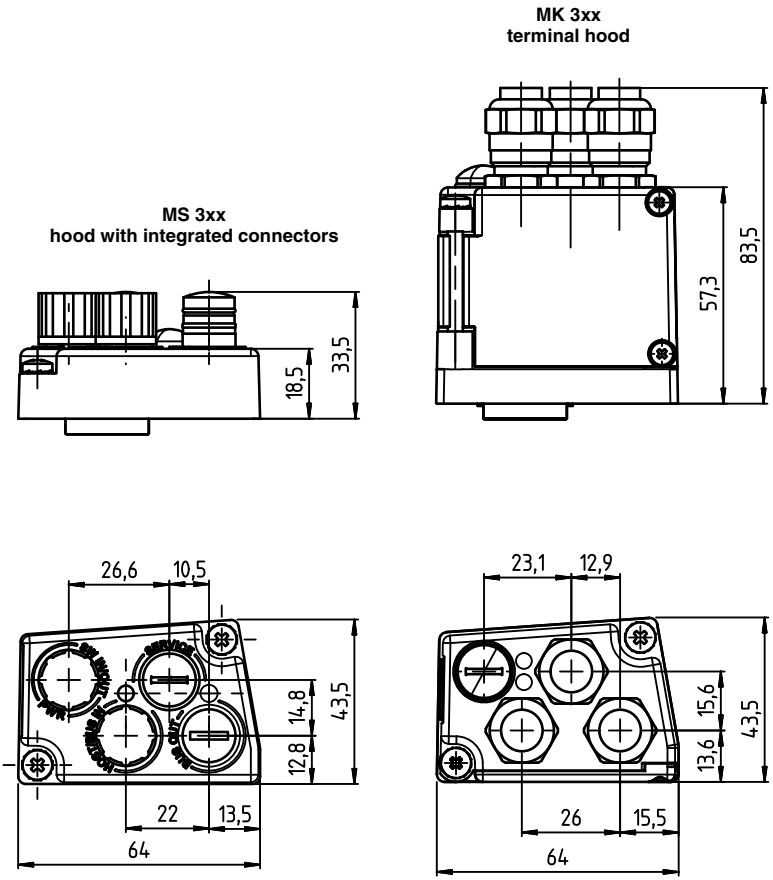

Attention!

To ensure protection class IP 65 is fulfilled, the screws of the connection hood are tightened with a tightening torque of 1.4Nm for connecting to the BCL.

Figure 5.5: Dimensioned drawing of MS 3xx hood with integrated connectors / MK 3xx terminal hood

5.4 Reading field curves / optical data

5.4.1 Bar code characteristics

Notice!

Please note that the size of the bar code module influences the maximum reading distance and the width of the reading field. Therefore, when selecting a mounting location and/or the bar code label, take into account the different reading characteristics of the scanner with various bar code modules.

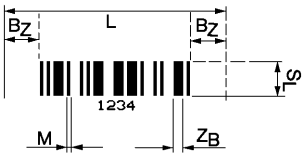

M = Module: The narrowest line or space of a bar code in mm.

Z_B = Wide character: Wide bars and gaps are a multiple (ratio) of the module.
Module x Ratio = Z_B (Normal Ratio 1 : 2.5).

B_Z = Quiet zone: The quiet zone should be at least 10 times the module, but not less than 2.5 mm.

L = Code length: The length of the bar code in mm including the start and stop characters. The quiet zone is included depending on the code definition.

S_L = Bar length: Height of the elements in mm.

Figure 5.6: The most important characteristics of a bar code

The range in which the bar code can be read by the BCL 304*i* (the so-called reading field) depends on the quality of the printed bar code and its dimensions.

Therefore, above all, the module of a bar code is decisive for the size of the reading field.

Notice!

A rule of thumb: The smaller the module of the bar code is, the smaller the maximum reading distance and reading field width will be.

5.4.2 Raster scanner

A raster variant is also available in the BCL 300*i* series. The BCL 300*i* as a raster scanner projects 8 scan lines which vary depending on the reading distance from the raster aperture.

		Distance [mm] starting at the zero position						
		50	100	200	300	400	450	700
Raster line cover [mm] all raster lines	Front scanner	**8**	**14**	**24**	**35**	**45**	**50**	**77**
	Deflection mirror scanner	**12**	**17**	**27**	**38**	**48**	**54**	**80**

Table 5.7: Raster line cover as a function of the distance

5.5 Reading field curves

Notice!

Please notice that the real reading fields are also influenced by factors such as labeling material, printing quality, reading angle, printing contrast etc., and may thus deviate from the reading fields specified here.

The reading field curves also apply for the variants with heating.

The zero position of the reading distance always refers the front edge of the housing of the beam exit and is shown in figure 5.7 for the three housing types of the BCL 304*i*.

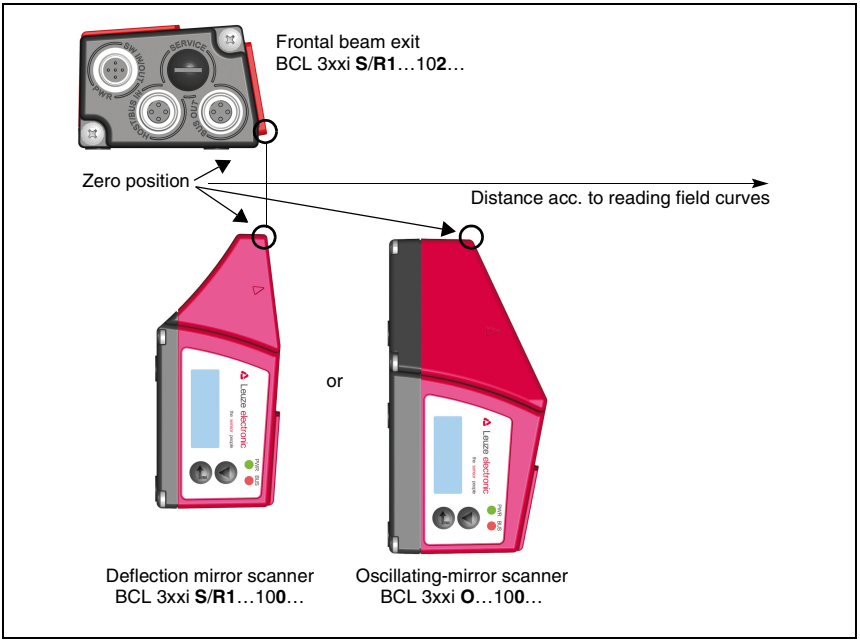

Figure 5.7: Zero position of the reading distance

Reading conditions for the reading field curves

Bar code type	2/5 Interleaved
Ratio	1:2.5
ANSI specification	class A
Reading rate	> 75%

Table 5.8: Reading conditions

5.5.1 High Density (N) - optics: BCL 304*i* S/R1 N 102 (H)

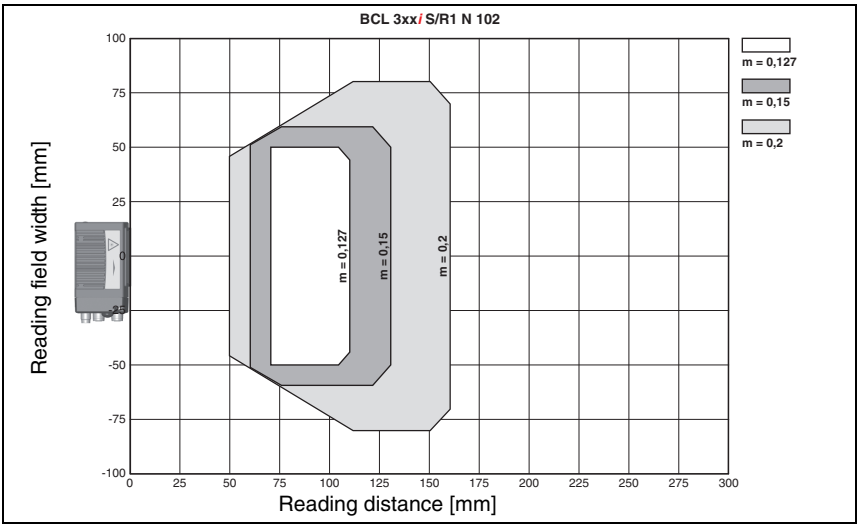

Figure 5.8: "High Density" reading field curve for line scanner without deflection mirror

5.5.2 High Density (N) - optics: BCL 304*i* S/R1 N 100 (H)

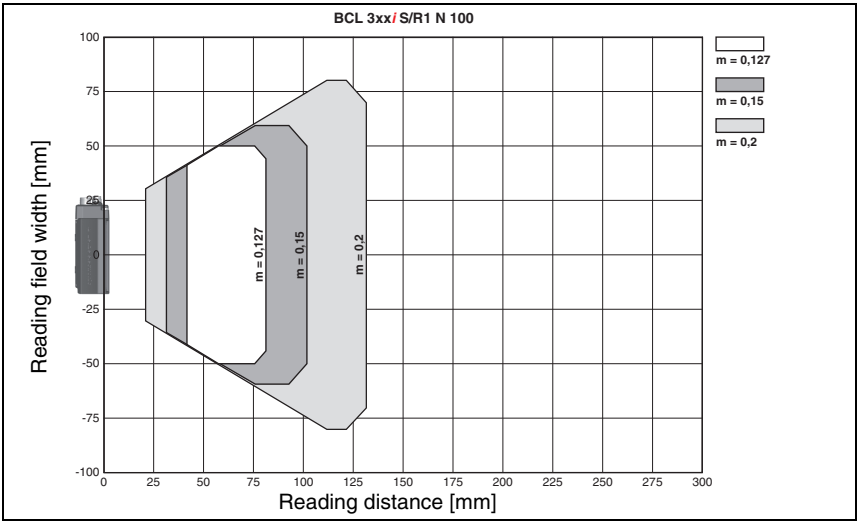

Figure 5.9: "High Density" reading field curve for line scanner with deflection mirror

The reading field curve applies for the reading conditions stated in table 5.8.

5.5.3 High Density (N) - optics: BCL 304*i* ON 100 (H)

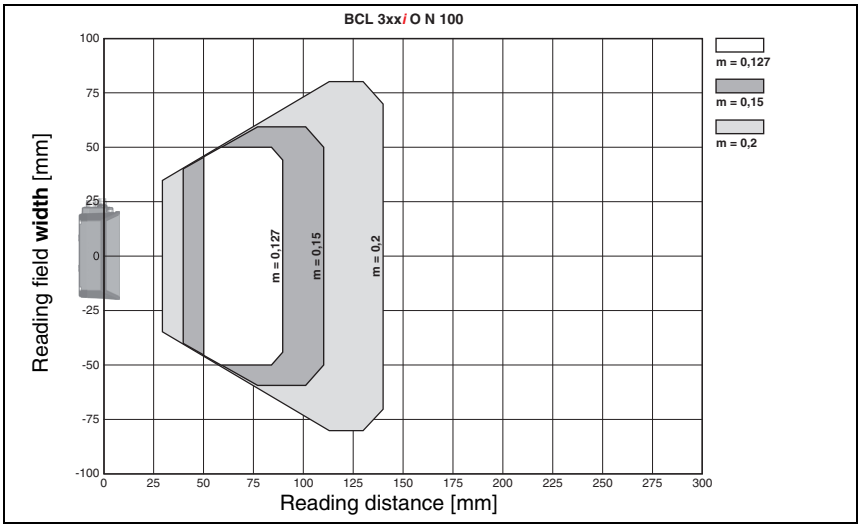

Figure 5.10: "High Density" reading field curve for oscillating-mirror scanners

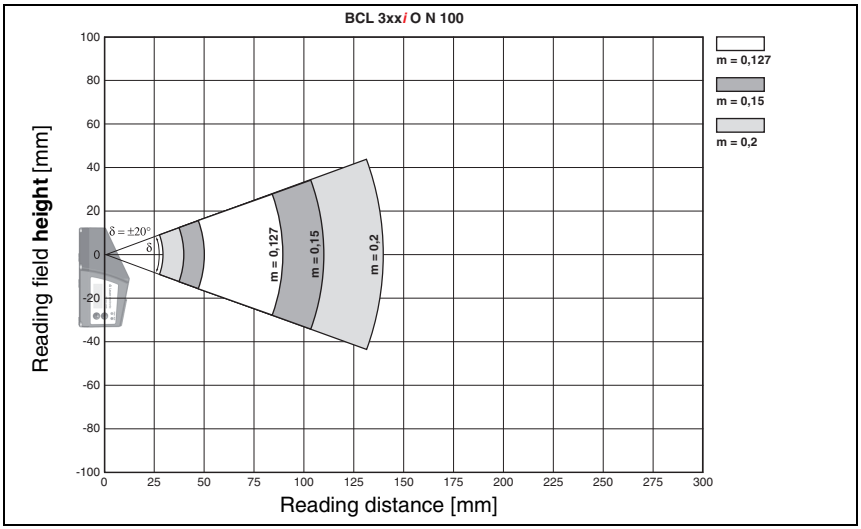

Figure 5.11: Lateral "High Density" reading field curve for oscillating-mirror scanners

The reading field curves apply for the reading conditions stated in table 5.8.

5.5.4 Medium Density (M) - optics: BCL 304*i* S/R1 M 102 (H)

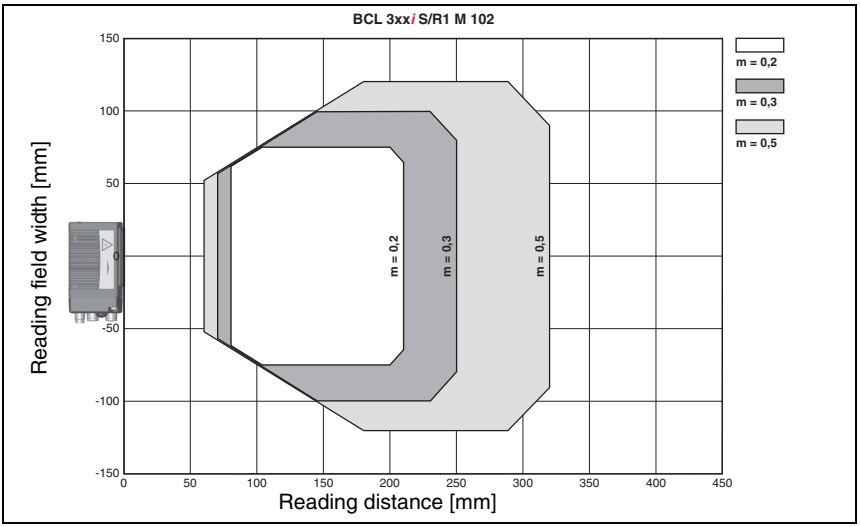

Figure 5.12: "Medium Density" reading field curve for line scanner without deflection mirror

5.5.5 Medium Density (M) - optics: BCL 304*i* S/R1 M 100 (H)

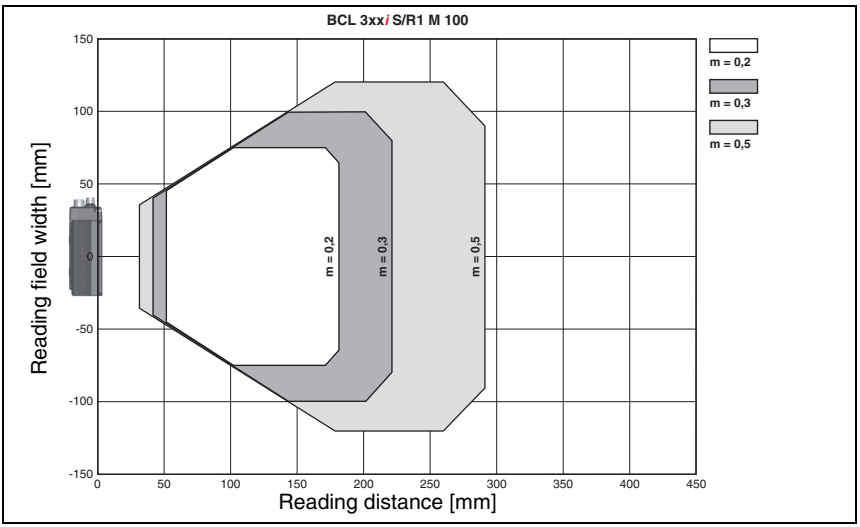

Figure 5.13: "Medium Density" reading field curve for line scanner with deflection mirror

The reading field curves apply for the reading conditions stated in table 5.8.

5.5.6 Medium Density (M) - optics: BCL 304*i* OM 100 (H)

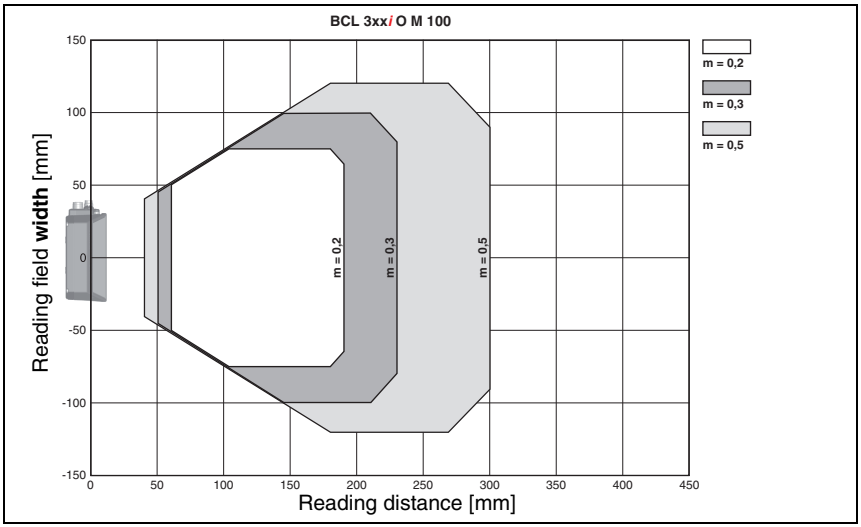

Figure 5.14: "Medium Density" reading field curve for oscillating-mirror scanners

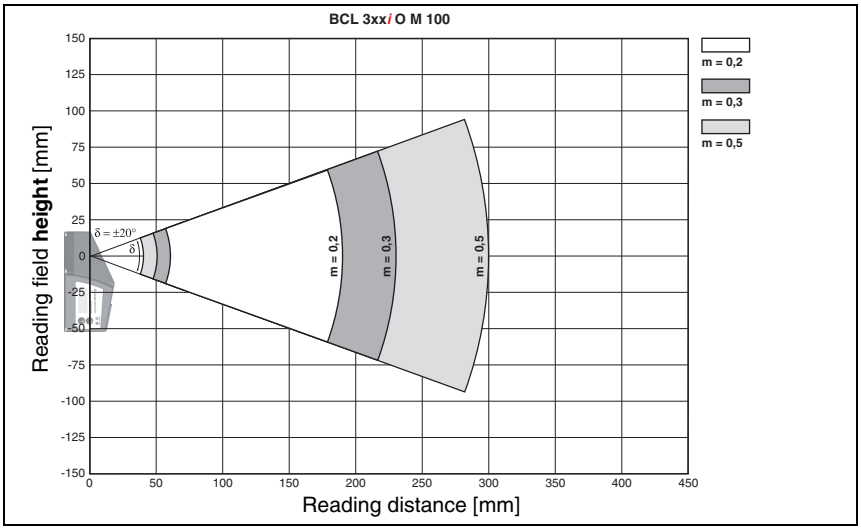

Figure 5.15: Lateral "Medium Density" reading field curve for oscillating-mirror scanners

The reading field curves apply for the reading conditions stated in table 5.8.

5.5.7 Low Density (F) - optics: BCL 304*i* S/R1 F 102 (H)

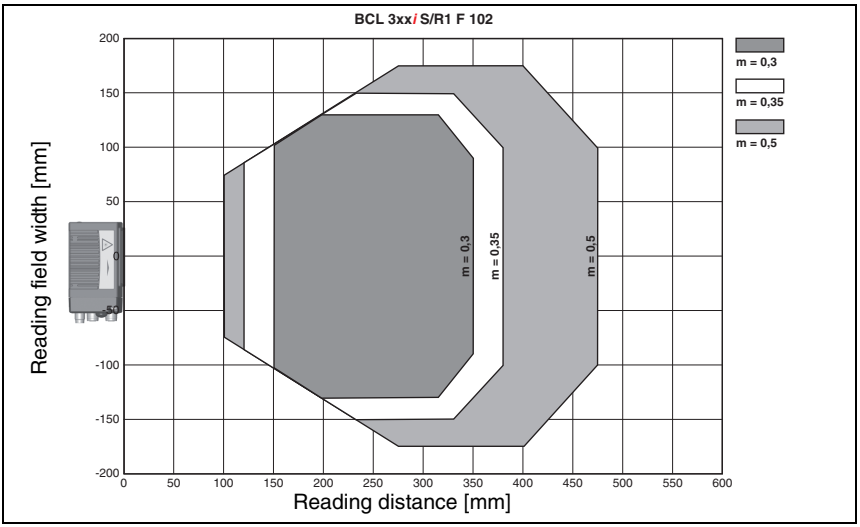

Figure 5.16: "Low Density" reading field curve for line scanner without deflection mirror

5.5.8 Low Density (F) - optics: BCL 304*i* S/R1 F 100 (H)

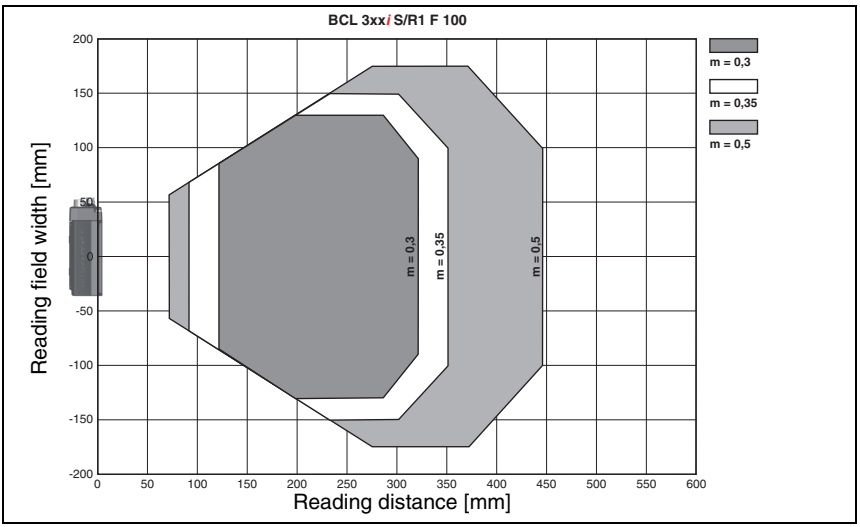

Figure 5.17: "Low Density" reading field curve for line scanner with deflection mirror

The reading field curves apply for the reading conditions stated in table 5.8.

5.5.9 Low Density (F) - optics: BCL 304*i* OF 100 (H)

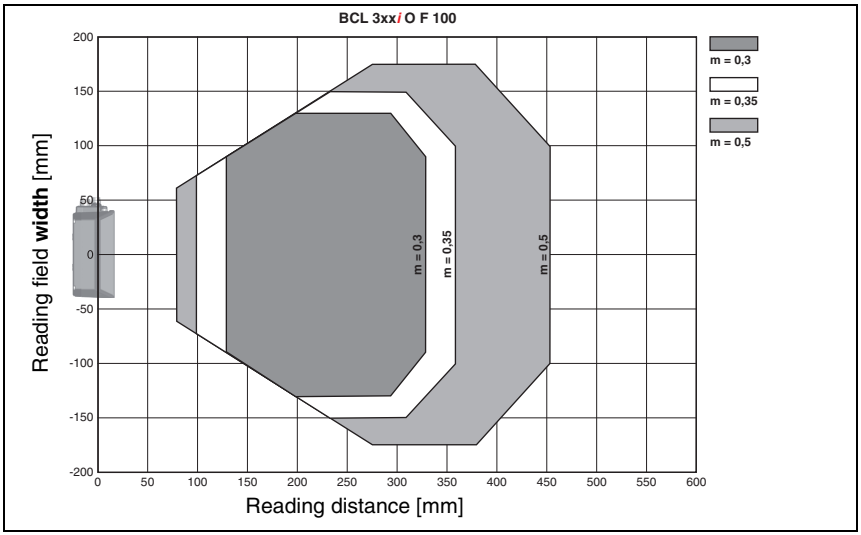

Figure 5.18: "Low Density" reading field curve for oscillating-mirror scanners

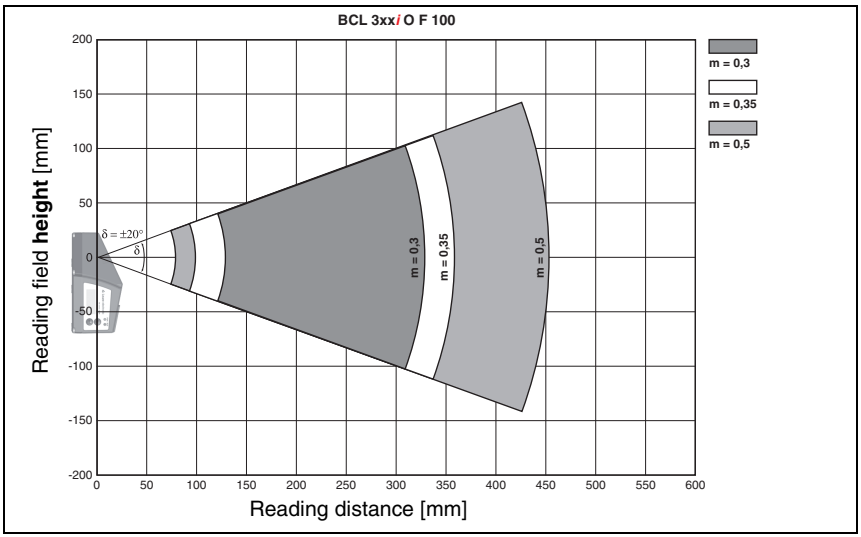

Figure 5.19: Lateral "Low Density" reading field curve for oscillating-mirror scanners

The reading field curves apply for the reading conditions stated in table 5.8.

5.5.10 Ultra Low Density (L) - optics: BCL 304*i* S/R1 L 102 (H)

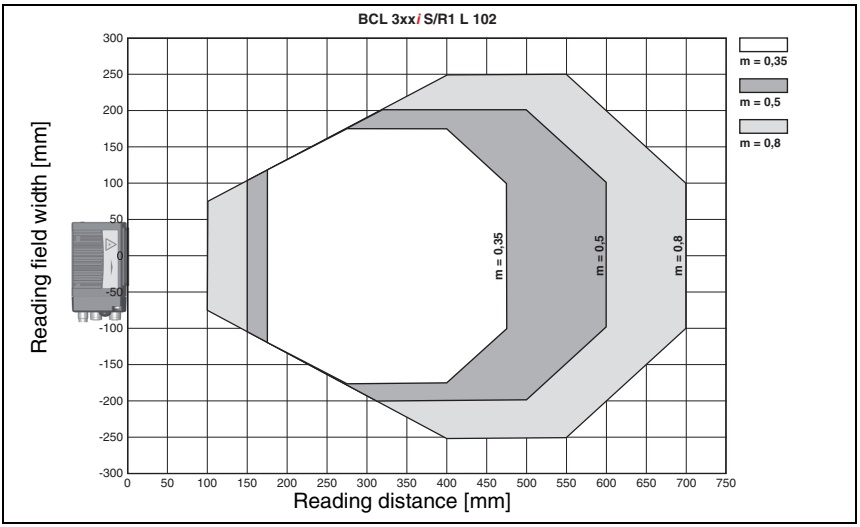

Figure 5.20: "Ultra Low Density" reading field curve for line scanner without deflection mirror

5.5.11 Ultra Low Density (L) - optics: BCL 304*i* S/R1 L 100 (H)

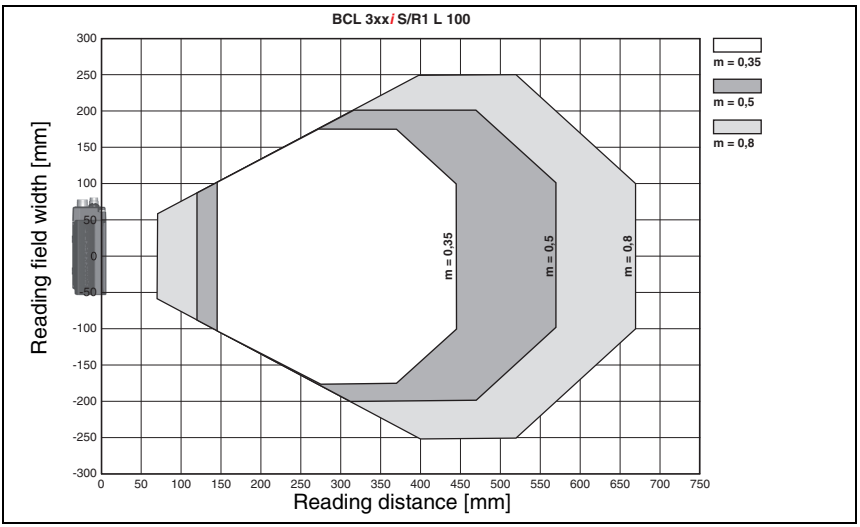

Figure 5.21: "Ultra Low Density" reading field curve for line scanner with deflection mirror

The reading field curves apply for the reading conditions stated in table 5.8.

5.5.12 Ultra Low Density (L) - optics: BCL 304*i* OL 100 (H)

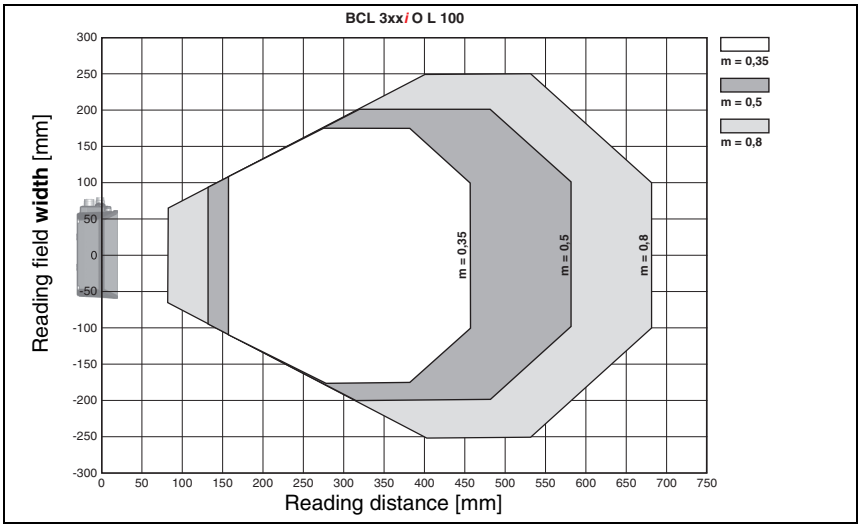

Figure 5.22: "Ultra Low Density" reading field curve for oscillating-mirror scanners

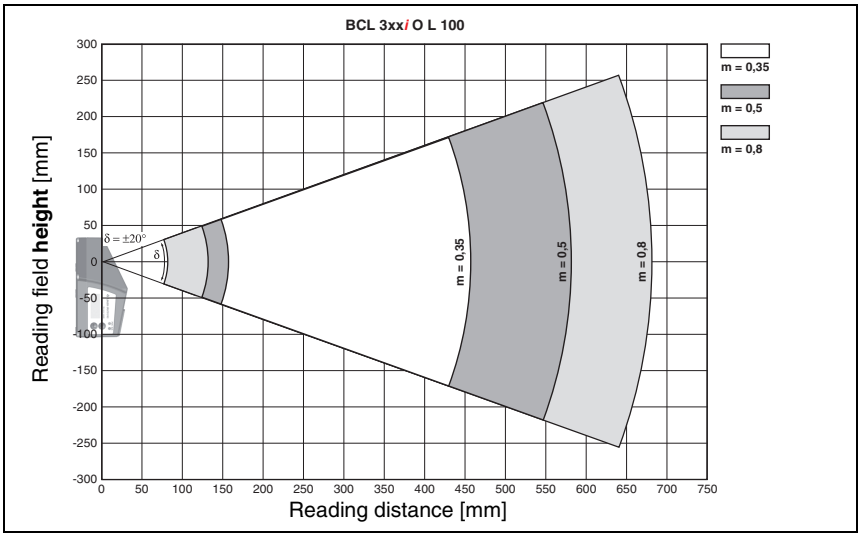

Figure 5.23: Lateral "Ultra Low Density" reading field curve for oscillating-mirror scanners

The reading field curves apply for the reading conditions stated in table 5.8.

6 Installation and mounting

6.1 Storage, transportation

Attention!

When transporting or storing, package the device so that it is protected against collision and humidity. Optimum protection is achieved when using the original packaging. Heed the required environmental conditions specified in the technical data.

Unpacking

- *Check the packaging for any damage. If damage is found, notify the post office or shipping agent as well as the supplier.*
- *Check the delivery contents using your order and the delivery papers:*
  - Delivered quantity
  - Device type and model as indicated on the name plate
  - Laser warning signs
  - Brief manual

The name plate provides information as to what BCL type your device is. For specific information, please refer to chapter 5.

Name plates of the bar code readers of the BCL 304i series

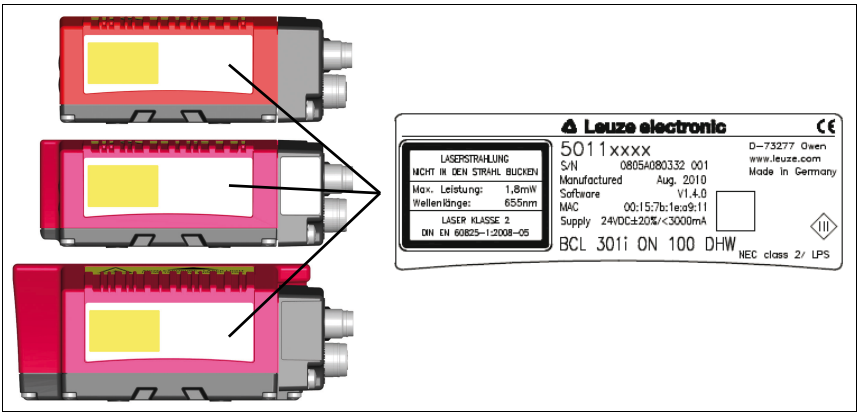

Figure 6.1: Device name plate BCL 304*i*

- *Save the original packaging for later storage or shipping.*

Notice!

All BCL 304i are delivered with a protective cover on the connection side which must be removed before attaching a connection hood.

If you have any questions concerning your shipment, please contact your supplier or your local Leuze electronic sales office.

↳ *Observe the applicable local regulations when disposing of the packaging materials.*

6.2 Mounting the BCL 304*i*

The BCL 304*i* bar code readers can be mounted in two different ways:

- Via four or six M4x5 screws on the bottom of the device.
- Via a BT 56 mounting device in the two fastening grooves on the bottom of the device.

Attention!

The BCL 300i does not fulfill protection class IP 65 until the connection hood has been screwed on. Minimum tightening torque of the housing connection screws on the connection hood 1.4 Nm!

6.2.1 Fastening with M4 x 5 screws

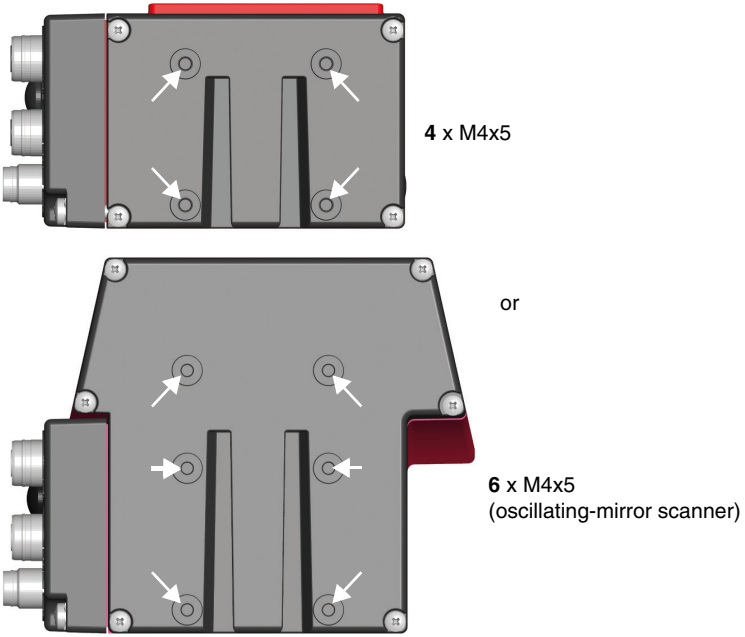

Figure 6.2: Fastening options using M4x5 threaded holes

6.2.2 BT 56 mounting device

The BT 56 mounting device is available for mounting the BCL 304*i* using the fastening grooves. It is designed for rod mounting (Ø 16mm to 20mm). For ordering instructions, please refer to chapter "Type overview and accessories" on page 136.

BT 56 mounting device

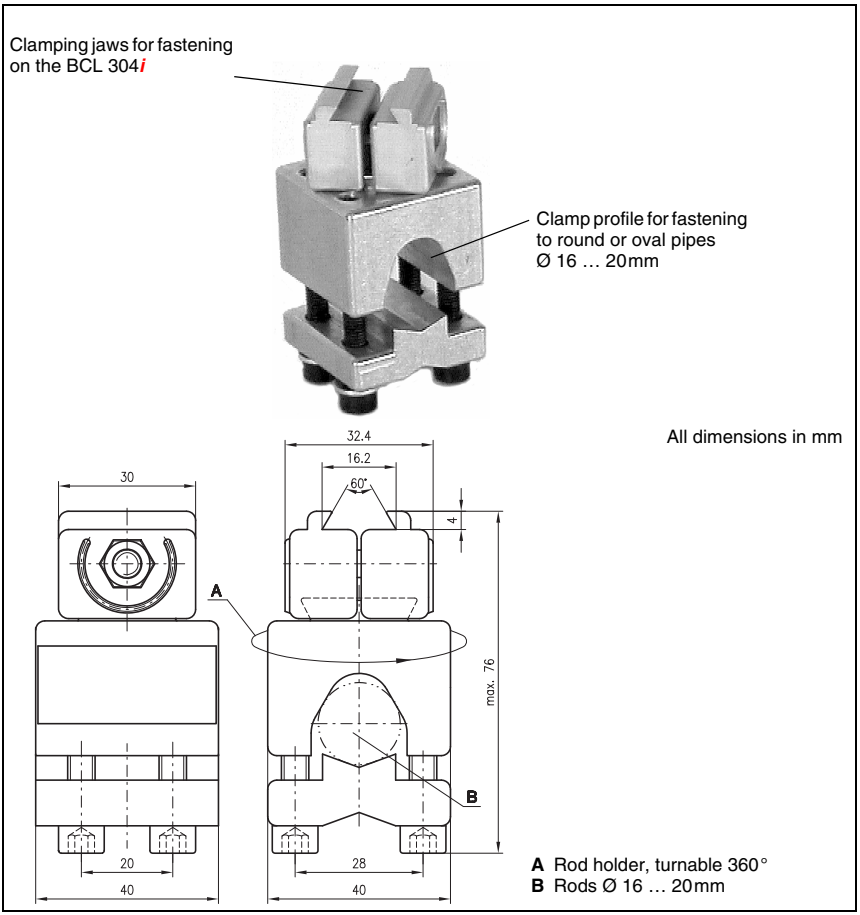

Figure 6.3: BT 56 mounting device

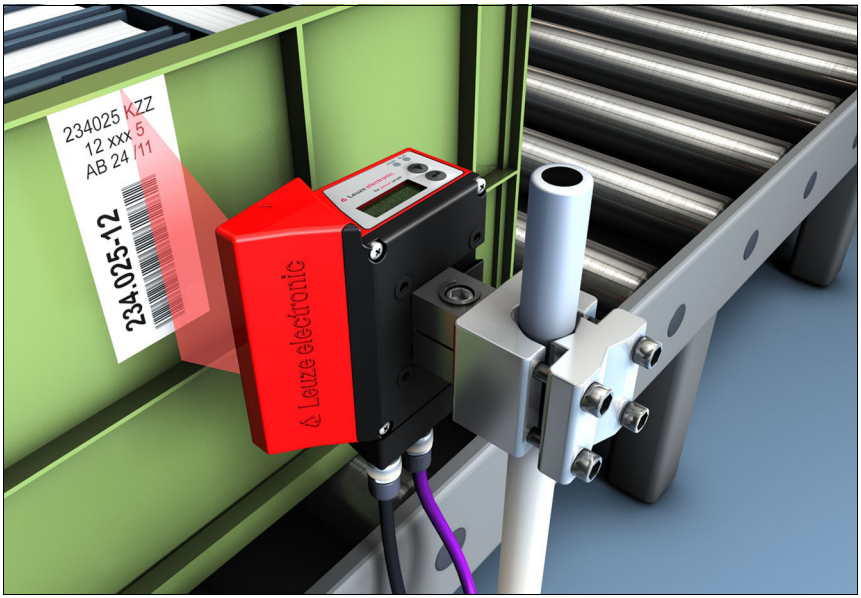

Figure 6.4: Mounting example of BCL 304*i* with BT 56

6.2.3 BT 59 mounting device

The BT 59 mounting device offers you an additional fastening option. For ordering instructions, please refer to chapter "Type overview and accessories" on page 136.

BT 59 mounting device

Clamping jaws for fastening on the BCL 304*i*

All dimensions in mm

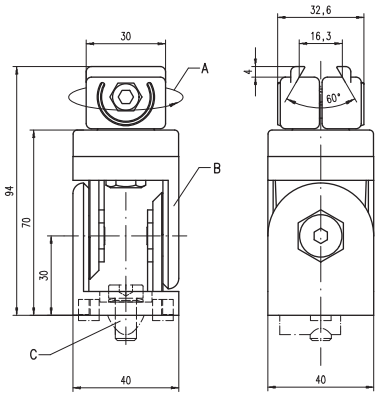

A Holder, turnable 360°
B ITEM joint, angle adjustable ±90°
C M 8x16 screw cylinder, M 8 wave washer, M 8 sliding block, connectors for ITEM profile (2x)

Figure 6.5: BT 59 mounting device

Notice!

When mounting, ensure that the scanning beam is not reflected directly back to the scanner by the label which is being read. For further information, see the notices in chapter 6.3! Please refer to chapter 5.4 for the permissible minimum and maximum distances between the BCL 304i and the labels to be read.

6.3 Device arrangement

6.3.1 Selecting a mounting location

In order to select the right mounting location, several factors must be considered:

- Size, orientation, and position tolerance of the bar codes on the objects to be scanned.
- The reading field of the BCL 304*i* in relation to the bar code module width.
- The resulting minimum and maximum reading distance from the respective reading field (see chapter 5.4 "Reading field curves / optical data").
- The permissible cable lengths between the BCL 304*i* and the host system depending on which interface is used.
- The correct time for data output. The BCL 304*i* should be positioned in such a way that, taking into consideration the time required for data processing and the conveyor belt speed, there is sufficient time to e.g. initiate sorting operations on the basis of the read data.
- The display elements such as LEDs or the display should be highly visible.
- For configuring and commissioning with the webConfig tool, the USB interface should be easily accessible.

For specific information, please refer to chapter 6 and chapter 7.

Notice!

The beam of the BCL 304i exits:

- **parallel** to the **housing base** in the case of the line scanner
- at **105 degrees** from the **housing base** in the case of the deflection mirror
- **perpendicular** to the **housing base** in the case of the oscillating mirror

In each case, the housing base is the black area in figure 6.2. The best read results are obtained when:

- *The BCL 304i is mounted in such a way that the scanning beam is incident on the bar code at an angle of inclination greater than ±10° … 15° to vertical.*
- *The reading distance lies in the middle area of the reading field.*
- *The bar code labels are of good print quality and have good contrast ratios.*
- *You do not use high-gloss labels.*
- *There is no direct sunlight.*

6.3.2 Avoiding total reflection – Line scanner

The bar code label must be positioned at an angle of inclination greater than ±10° … 15° from vertical in order to avoid total reflection of the laser beam (see figure 6.6)!

Total reflection occurs whenever the laser light of the bar code reader is directly incident on the surface of the bar code at an angle of 90°. The light directly reflected by the bar code may overload the bar code reader and thereby cause non-readings!

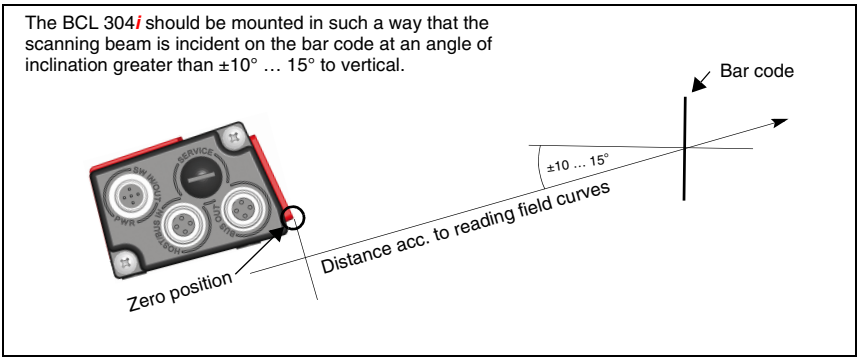

Figure 6.6: Total reflection – line scanner

6.3.3 Avoiding total reflection – deflection mirror scanner

For the BCL 304*i* with **deflection mirror**, the laser beam exits at an angle of 105° to the rear housing wall.

An angle of incidence of 15° of the laser to the label has already been integrated in the deflection mirror so that the BCL 304*i* can be installed parallel to the bar code (rear housing wall).

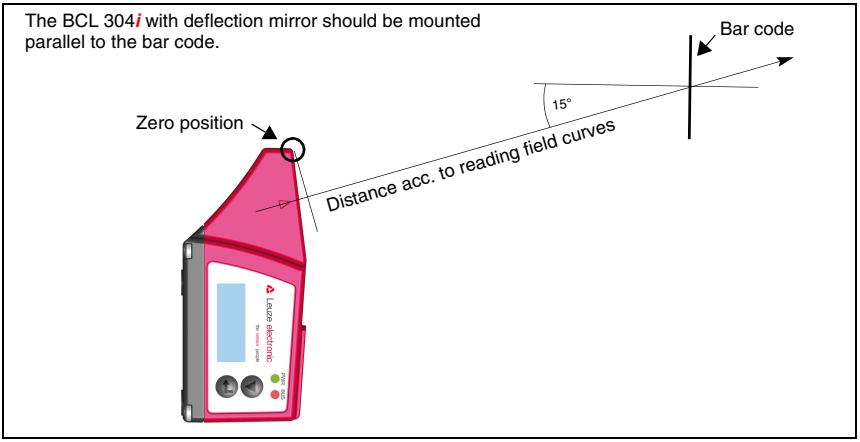

Figure 6.7: Total reflection – line scanner

6.3.4 Avoiding total reflection – oscillating-mirror scanner

For the BCL 304*i* with **oscillating mirror**, the laser beam exits at an angle of **90° to vertical**.

For the BCL 304*i* with **oscillating mirror**, the **swivel range of ±20°** (±12° for devices with heating) **is to be taken into account**.

This means that in order to be on the safe side and to avoid total reflection, the BCL 304*i* with oscillating mirror must be inclined upward or downward 20° … 30°!

Notice!

Mount the BCL 304i with oscillating mirror in such a way that the outlet window of the bar code reader is parallel to the object. This will result in an angle of inclination of approx. 25°.

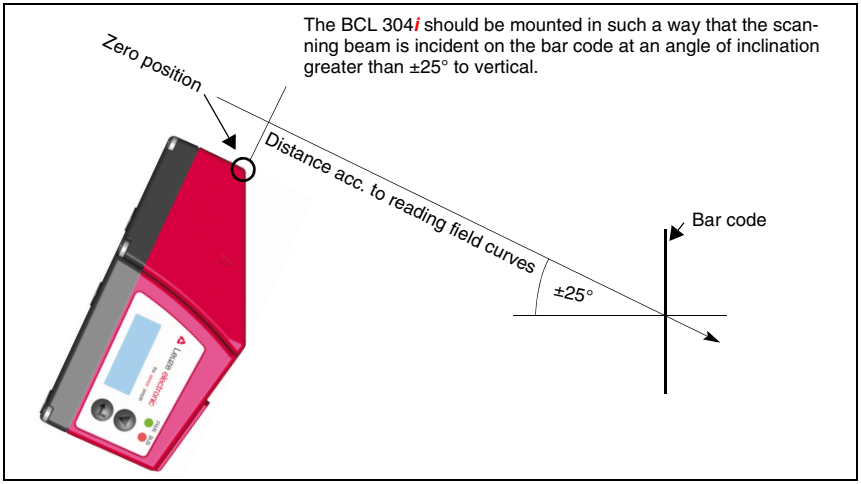

Figure 6.8: Total reflection – BCL 304*i* with oscillating mirror

6.3.5 Mounting location

When selecting a mounting location, pay attention to:

- *Maintaining the required environmental conditions (temperature, humidity).*
- *Possible soiling of the reading window due to liquids, abrasion by boxes, or packaging material residues.*
- *Lowest possible chance of damage to the BCL 304i by mechanical collision or jammed parts.*
- *Possible extraneous light (no direct sunlight or sunlight reflected by the bar code).*

6.3.6 Devices with integrated heating

For devices with integrated heating, also observe the following points:

- Mount the BCL 304*i* in a way which provides maximum thermal isolation, e.g. using rubber-bonded metal.
- Mount in such a way that the device is protected from draft and wind; mount additional shields if necessary.

Notice!

When installing the BCL 304i in a protective housing, it must be ensured that the scanning beam can exit the protective housing without obstruction.

6.3.7 Possible reading angles between BCL 304*i* and bar code.

The optimum alignment of the BCL 304*i* is accomplished when the scan line scans the code bars almost at a right angle (90°). All reading angles that are possible between the scan line and bar code must be taken account (figure 6.9).

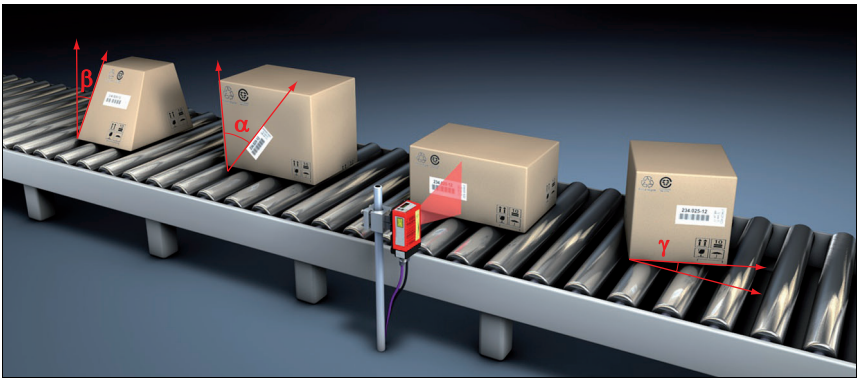

Figure 6.9: Reading angle for the line scanner

α Tilt

β Angle of inclination (Pitch)

γ Skew

In order to avoid total reflection, the skew γ should be greater than 10°.

6.4 Cleaning

↳ *Clean the glass pane of the BCL 304i with a soft cloth after mounting. Remove all packaging remains, e.g. carton fibers or Styrofoam balls. In doing so, avoid leaving fingerprints on the front cover of the BCL 304i.*

Attention!

Do not use aggressive cleaning agents such as thinner or acetone for cleaning the device.

7 Electrical connection

The bar code readers in the BCL 300*i* series feature a modular connection concept with interchangeable connection hoods.

The additional Mini-B type USB interface is used for service purposes.

Notice!

On delivery, the products are provided with a plastic protective cap on the side of the system plug or the system socket.

Additional connection accessories can be found in chapter 13.

Attention!

The BCL 304i does not fulfill protection class IP 65 until the connection hood has been screwed on. Minimum tightening torque of the housing connection screws on the connection hood 1.4 Nm!

Location of the electrical connections

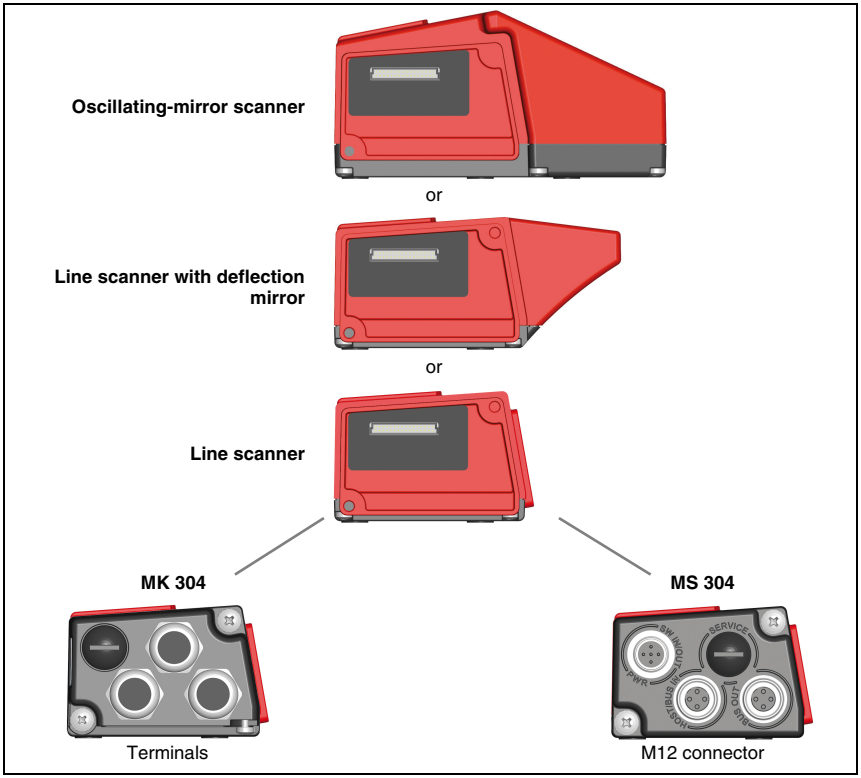

Figure 7.1: Location of the electrical connections

7.1 Safety notices for the electrical connection

Attention!

Do not open the device yourself under any circumstances! There is otherwise a risk of uncontrolled emission of laser radiation from the device. The housing of the BCL 304i contains no parts that need to be adjusted or maintained by the user.

Before connecting the device, be sure that the supply voltage agrees with the value printed on the name plate.

Connection of the device and cleaning must only be carried out by a qualified electrician.

Ensure that the functional earth (FE) is connected correctly. Unimpaired operation is only guaranteed when the functional earth is connected properly.

If faults cannot be corrected, the device should be removed from operation and protected against possible commissioning.

Attention!

For UL applications, use is permitted exclusively in Class 2 circuits according to NEC (National Electric Code).

The bar code readers of the BCL 300i series are designed in accordance with safety class III for supply by PELV (protective extra-low voltage).

Notice!

Protection class IP 65 is not fulfilled until connectors or cable lead-throughs are screwed on and caps are installed!

Attention!

To ensure protection class IP 65 is fulfilled, the screws of the connection hood are tightened with a tightening torque of 1.4 Nm for connecting to the BCL.

7.2 Electrical connectionBCL 304*i*

For the electrical connection of the BCL 304*i*, 2 connection variants are available.

The **voltage supply** (18 … 30 V DC) is connected acc. to the connection type selected.

2 freely programmable switching inputs/outputs for individual adaptation to the respective application are also available here. Detailed information on this topic can be found in chapter 7.3.1.

7.2.1 MS 304 hood with 3 integrated M12 connectors

The MS 304 hood with integrated connectors features three M12 connector plugs and a Mini-B type USB socket as a service interface. When the device is exchanged, the PROFIBUS address does not have to be re-set; it stays set in the MS 304. The PROFIBUS is not interrupted when the device is exchanged. BUS IN and BUS OUT are connected in the MS 304 and safeguard the operation of the PROFIBUS even in the case of device replacement.

The address switch located in the MS 304 is used to set the PROFIBUS address of the BCL 304*i*. If the BCL 304*i* is the last participant on the PROFIBUS cable, the BUS OUT socket on the MS 304 must be fitted with a terminator plug (accessories).

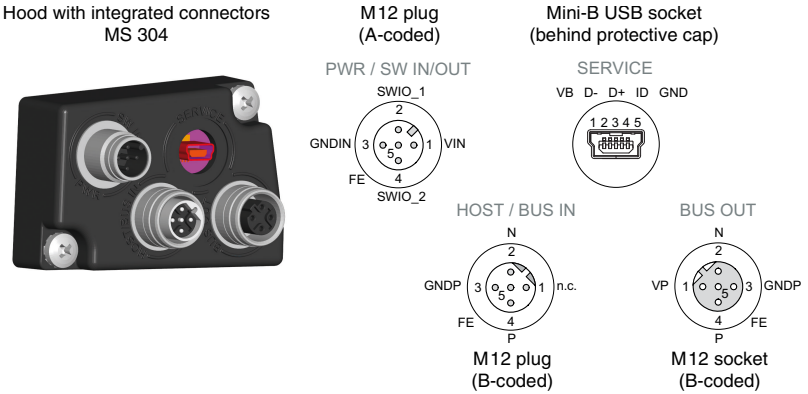

Figure 7.2: BCL 304*i* - MS 304 hood with integrated M12 connectors

Notice!

The shielding connection is done via the M12 connector housing.

Notice!

PROFIBUS address 126 is set by default in the MS 304.
The integrated parameter memory for the simple replacement of the BCL 304i is located in the MS 304.

Notice!

The PROFIBUS is looped through the MS 304, i.e. the bus is not interrupted when the BCL 304i is removed from the MS 304.
The bus is terminated at BUS OUT via an external mounted terminating resistor (See chapter 13.4 "Accessory terminating resistor").

Notice!

See chapter 5.3.5 "Dimensioned drawing of MS 3xx hood with integrated connectors / MK 3xx terminal hood" dimensioned drawing on page 51.

7.2.2 MK 304 terminal hood with spring-loaded terminals

The MK 304 terminal hood makes it possible to connect the BCL 304*i* directly and without additional connectors. The MK 304 features three cable lead-throughs in which the shielding connection for the interface cable is also located. When the device is exchanged, the PROFIBUS address does not have to be re-set; it stays set in the MS 304. The PROFIBUS is not interrupted when the device is exchanged. A Mini-B type USB socket is used for service purposes. One slide switch and two rotary switches are integrated in the MK 304 for setting the PROFIBUS address. The slide switch for termination of the PROFIBUS is also located in the interior of the MK 304.

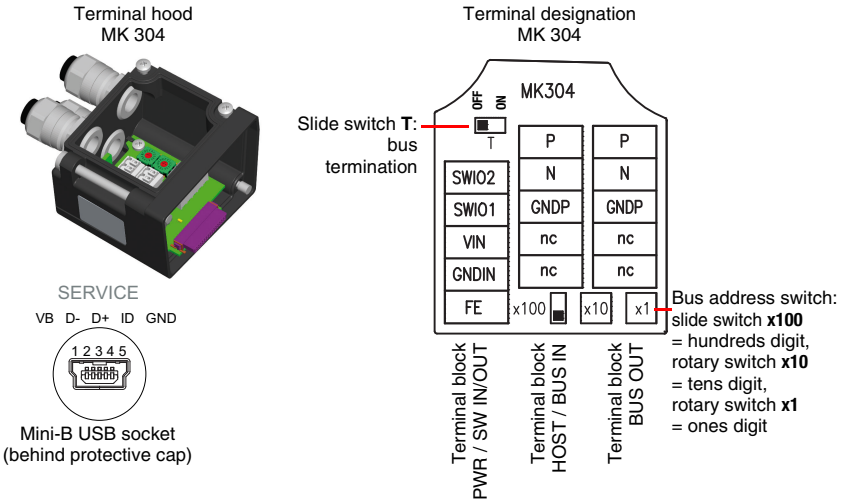

Figure 7.3: BCL 304*i* - MK 304 terminal hood with spring-loaded terminals

Notice!

PROFIBUS address 126 is set by default in the MK 304.
The integrated parameter memory for simple exchange of the BCL 304i is located in the MK 304.

Notice!

*The PROFIBUS is looped through the MK 304, i.e. the bus is not interrupted when the BCL 304i is removed from the MK 304. The PROFIBUS is terminated via slide switch **T** in the MK 304. If the termination is activated (slide switch **T** in the **ON** position), the downstream bus is disconnected.*

Cable fabrication and shielding connection

Remove approx. 78 mm of the connection cable sheathing. 15 mm of sheath of the shielded line must be freely accessible.

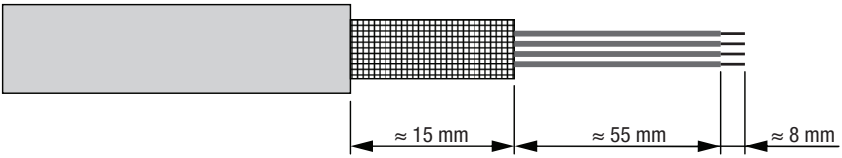

Figure 7.4: Cable fabrication for MK 304 terminal hood

The shield is automatically contacted when the cable is lead into the metal screw fitting and fastened when the cord grip is closed. Then lead the individual wires into the terminals according to the diagram. Wire end sleeves are not necessary.

Notice!

See chapter 5.4 "Reading field curves / optical data" dimensioned drawing on page 52.

7.3 Detailed description of the connections

Described in detail in the following are the individual connections and pin assignments.

7.3.1 PWR / SW IN/OUT - Voltage supply and switching input/outputs 1 and 2

PWR / SW IN/OUT			
MS 304 PWR / SW IN/OUT 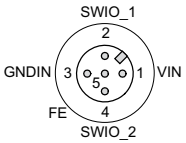 **M12 plug (A-coded)** **MK 304** 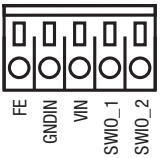 **Spring-loaded terminals**	**Pin (M12)**	**Name (terminal)**	**Remark**
	1	VIN	Positive supply voltage +18 … +30VDC
	2	SWIO_1	Configurable switching input / output 1
	3	GNDIN	Negative supply voltage 0VDC
	4	SWIO_2	Configurable switching input / output 2
	5	FE	Functional earth
	Thread	FE	Functional earth (housing)

Table 7.1: Pin assignment PWR / SW IN/OUT

Supply voltage

Attention!

For UL applications, use is permitted exclusively in Class 2 circuits according to NEC (National Electric Code).

The bar code readers of the BCL 300i … series are designed in accordance with safety class III for supply by PELV (protective extra-low voltage).

Connecting functional earth FE

- *Ensure that the functional earth (FE) is connected correctly. Unimpaired operation is only guaranteed when the functional earth is connected properly. All electrical disturbances (EMC couplings) are discharged via the functional earth connection.*

Switching input / output

The bar code readers of the BCL 300*i* series are equipped with two freely programmable, opto-decoupled switching inputs and outputs, **SWIO_1** and **SWIO_2**.

The switching inputs can be used to activate various internal functions of the BCL 304*i* (decoding, autoConfig, …). The switching outputs can be used to signal the state of the BCL 304*i* and to implement external functions independent of the superior control.

Notice!

The respective function as input or output can be set with the aid of the webConfig configuration tool!

Described in the following is the external wiring for use as a switching input or output; the respective function assignments to the switching inputs/outputs can be found in chapter 10.

Function as switching input

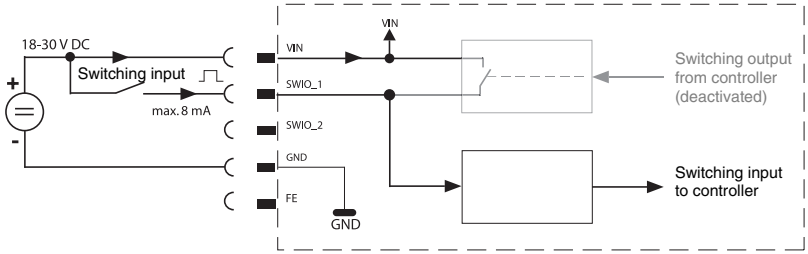

Figure 7.1: Switching input connection diagram SWIO_1 and SWIO_2

↳ *If you use a sensor with a standard M12 connector, please note the following:*

- Pins 2 and 4 must not be operated as switching outputs if sensors which function as inputs are also connected to these pins.

If, for example, the inverted sensor output is connected to pin 2, and pin 2 of the bar code reader is, at the same time, configured as an output (and not as an input), the switching output malfunctions.

Attention!

The maximum input current must not exceed 8 mA!

Function as switching output

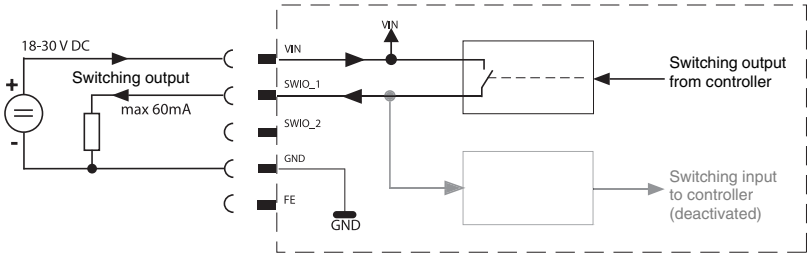

Figure 7.2: Switching output connection diagram SWIO_1 / SWIO_2

Attention!

Each configured switching output is short-circuit proof! Do not load the respective switching output of the BCL 304i with more than 60 mA at +18 … +30 VDC in normal operation!

Notice!

Both switching inputs/outputs SWIO_1 and SWIO_2 are configured by default in such a way that:

- Switching input SWIO_1 activates the reading gate.
- Switching output SWIO_2 switches by default on "No Read."

7.3.2 SERVICE – USB interface (Mini-B type)

SERVICE – USB interface (Mini-B type)			
SERVICE VB D- D+ ID GND 1 2 3 4 5	**Pin (USB Mini-B)**	**Name**	**Remark**
	1	VB	Sense input
	2	D-	Data -
	3	D+	Data +
	4	ID	Not connected
	5	GND	Ground

Table 7.2: Pin assignment SERVICE – Mini-B type USB interface

Ensure adequate shielding.

The entire connection cable must absolutely be shielded acc. to the USB specifications. Cable length must not exceed 3m.

*Use the Leuze-specific **USB service cable** (See chapter 13 "Type overview and accessories") for the connection and use a service PC to configure.*

Notice!

IP 65 is achieved only if the connectors and caps are screwed into place.

7.3.3 HOST / BUS IN for BCL 304*i*

The BCL 304*i* makes an interface of type **DP IN - incoming PROFIBUS** available as **HOST / BUS IN** connection.

HOST / BUS IN PROFIBUS DP incoming (5-pin connector, B-coded)			
MS 304 HOST / BUS IN 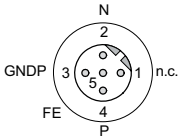 **M12 connector (B-coded)** **MK 304** 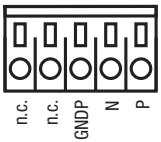 **Spring-loaded terminals**	**Pin (M12)**	**Name (terminal)**	**Remark**
	1	n.c.	Not connected
	2	N	Receive/transmit data A-line (N)
	3	GNDP	PROFIBUS reference ground
	4	P	Receive/transmit data B-line (P)
	5	FE	Functional earth / shield
	FE via thread	FE via screw fitting	Functional earth (housing)

Table 7.3: Pin assignment HOST / BUS IN BCL 304*i*

7.3.4 BUS OUT for the BCL 304*i*

To set up the PROFIBUS with additional participants, the BCL 304*i* makes available another interface of type **DP OUT - outgoing PROFIBUS DP**.

BUS OUT PROFIBUS DP outgoing (5-pin connector, B-coded)			
MS 304 BUS OUT 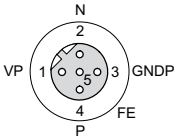 **M12 socket (B-coded)** **MK 304** 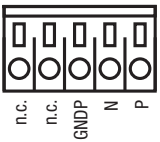 **Spring-loaded terminals**	**Pin (M12)**	**Name (terminal)**	**Remark**
	1	VP	+5 V DC for bus termination
	2	N	Receive/transmit data A-line (N)
	3	GNDP	PROFIBUS reference ground
	4	P	Receive/transmit data B-line (P)
	5	FE	Functional earth / shield
	FE via thread	FE via screw fitting	Functional earth (housing)

Table 7.4: Pin assignment BUS OUTBCL 304*i*

Notice!

Ensure adequate shielding. The entire connection cable must be shielded and earthed. For connecting DP IN and DP OUT, we recommend the ready-made PROFIBUS cables. See "Accessory ready-made cables for bus connection" on page 139.

7.3.5 PROFIBUS termination

The last physical PROFIBUS participant must be terminated with a terminating resistor (see "Accessory terminating resistor" on page 138) on the BUS OUT socket or via the activation of the termination using a slide switch in the MK 304.

7.4 Cable lengths and shielding

Observe the following maximum cable lengths and shielding types:

Connection	Interface	Max. cable length	Shielding
BCL – service	USB	3 m	shielding absolutely necessary acc. to USB specifications
PROFIBUS	PROFIBUS DP	Acc. to PNO specifications	acc. to PNO specifications
BCL – power supply unit		30 m	not necessary
Switching input		10 m	not necessary
Switching output		10 m	not necessary

Table 7.5: Cable lengths and shielding

8 Display elements and display

The BCL 304*i* is available optionally with display, two control buttons and LEDs or with only two LEDs as display elements.

8.1 LED indicators BCL 304*i*

Figure 8.1: BCL 304*i* - LED indicators

Two multicolor LEDs are used as the primary display instrument. LED functions:

PWR LED

PWR	**off**	**Device OFF** - no supply voltage
PWR	**flashes green**	**Device ok, initialization phase** - no bar code reading possible - voltage connected - self test running - initialization running
PWR	**green continuous light**	**Device ok** - bar code reading possible - self test successfully finished - device monitoring active
PWR	**green, briefly off - on**	**Good read, successful reading** - bar code(s) successfully read

PWR	**green, briefly off - briefly red - on**	**No read, reading not successful** - bar code(s) not read
PWR	**orange continuous light**	**Service mode** - bar code reading possible - configuration via the USB service interface - no data on the host interface
PWR	**flashes red**	**Warning set** - bar code reading possible - temporary operating fault
PWR	**red continuous light**	**Device error / parameter enable** - no bar code reading possible

BUS LED

BUS	**off**	**No supply voltage** - no communication possible
BUS	**flashes green**	**Initialization** - of the BCL 304*i*, establishing communication
BUS	**green continuous light**	**Operation ok** - bus ok, BCL 304*i* active on bus ("data exchange")
BUS	**flashes red**	**Communication error** Bus error - configuration failed ("parameter failure") - DP error - No data exchange
BUS	**red continuous light**	**Network error**

8.2 Display BCL 304*i*

Figure 8.2: BCL 304*i* - Display

Notice!

The function of the LEDs is identical for the devices with and without display.

The optional display of the BCL 304*i* has the following features:

- Monochromatic with background lighting (blue/white)
- Double line, 128 x 32 pixels
- Display language: English

The display is only used as a **display element**. Two buttons can control which values are displayed. In doing so, the upper line displays the selected function and the lower line displays the result.

The background lighting is activated by the push of any button and automatically deactivated after a defined point in time:

Display functions

The following functions can be displayed and activated:

- `Reading result` = result of reading process
- `Decodequality` = quality of decoding process
- `BCL Info` = device status/error code
- `I/O Status` = status of the in/output
- `BCL Address` = of the BCL 304*i* on the PROFIBUS
- `Adjustmode` = alignment mode
- `Version` = software and hardware version

After the voltage is switched off/on, `reading result` is always displayed.

The display is controlled via the two control buttons:

↵	**ENTER**	**Activate/deactivate the display change function**
▼	**Down**	**Scroll through functions (downwards)**

Example:

Representation of the `BUS status` on the display:

1. Press button ↵: display flashes
2. Press button ▼: display changes from read result to decoding quality
3. Press button ▼: display changes from decoding quality to device status
4. Press button ▼: display changes from device status to BUS status
5. Press button ↵: bus status is displayed, display stops flashing.

Description of the display functions

```
Reading result
88776655
```

- 1st line: **read result** display function
- 2nd line: code content of the bar code, e.g. **88776655**

```
Decoding quality
84
```

- 1st line: **decoding quality** display function
- 2nd line: decoding quality in percent, e.g. **84**%

```
BCL info
Error code 3201
```

- 1st line: **device status** display function
- 2nd line: error code, e.g. **Error code 3201**

```
I/O status
In = 0 Out = 1
```

- 1st line: input/output **state** display function
- 2nd line: state: 0 =inactive, 1 = active, e.g. **In=0, Out=1**

```
BCL address
25
```

- 1st line: **bus address** display function
- 2nd line: set address, e.g. **25**

```
Adjust mode
73
```

- 1st line: **alignment mode** display function
- 2nd line: decoding quality in percent, e.g. **73**%

```
Version
SW:xxxxx HW:xxx
```

- 1st line: **version** display function
- 2nd line: software and hardware version of the device

9 Leuze webConfig tool

With the **Leuze webConfig tool**, an operating system independent, web-technology based, graphical user interface is available for configuring bar code readers of the **BCL 300*i*** series.

Through the use of HTTP as communication protocol and by using only standard technologies on the client side (HTML, JavaScript and AJAX), which are supported by all commonly used, modern browsers (e.g. **Mozilla Firefox** beginning with Version 3.0 or **Internet Explorer** beginning with Version 8.0), it is possible to operate the **Leuze webConfig tool** on any internet-ready PC.

Notice!

The webConfig tool is offered in 5 languages:

- *German*
- *English*
- *French*
- *Italian*
- *Spanish*

9.1 Connecting the SERVICE USB interface

The SERVICE USB interface of the BCL 304*i* is connected via the PC -side USB interface by means of a standard USB cable, with 1 type A connector and 1 Mini-B type connector.

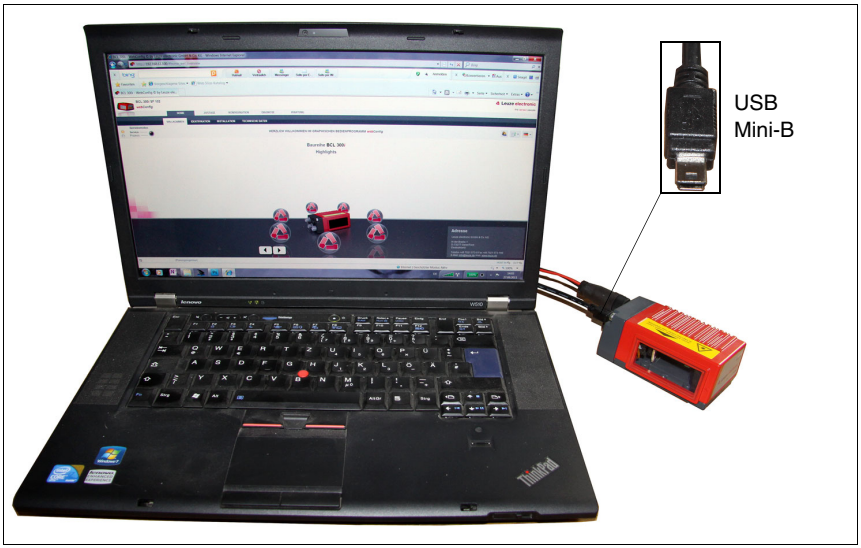

Figure 9.1: Connecting the SERVICE USB interface

9.2 Installing the required software

9.2.1 System requirements

Operating system:	Windows 2000 Windows XP (Home Edition, Professional) Windows Vista Windows 7
Computer:	PC with USB interface version 1.1 or higher
Graphics card:	min. 1024 x 768 pixels or higher resolution
Required hard-disk capacity:	approx. 10MB

Notice!

Updating the operating system and the browser regularly and installing the current Windows service packs is recommended.

9.2.2 Installing the USB driver

Notice!

*If you have already installed a USB driver for a BCL 5xx**i** on your computer, you don't have to install the USB driver for the BCL 304**i**. In this case, you can also start the webConfig tool of the BCL 304**i** by double-clicking on the BCL 5xx**i** icon.*

In order for the BCL 304*i* to be automatically detected by the connected PC, the **USB driver** must be installed **once** on your PC. To do this, you must have **administrator privileges**.

Please proceed according to the following steps:

- *Start your PC with administrator privileges and log on.*
- *Load the CD included in the delivery contents of your BCL 304**i** in the CD drive and start the "setup.exe" program.*
- *Alternatively, you can also download the setup program from the internet at www.leuze.com.*
- *Follow the instructions provided by the setup program.*

Upon successful installation of the USB driver, an icon with the name **Leuze Web Config** automatically appears on the desktop.

Notice!

If the installation failed, contact your network administrator: The settings of the firewall used may need to be adjusted.

9.3 Starting the webConfig tool

To start the **webConfig tool**, click the icon with the name **Leuze Web Config** located on the desktop. Make certain that the BCL 304*i* is connected to the PC via the USB interface and that voltage is connected.

Notice!

*If you have already installed a USB driver for a BCL 5xx*i* on your computer, you can also start the webConfig tool of the BCL 304*i* by double-clicking on the BCL 5xx*i* icon.*

Alternatively, you can start the webConfig tool by starting the browser installed on your PC and entering the following IP address: **192.168.61.100**

This is the default Leuze maintenance address for communication with bar code readers of the BCL 300*i* and BCL 500*i* series.

In both cases, the following start page appears on your PC.

Figure 9.2: The start page of the webConfig tool

Notice!

*The webConfig tool is completely contained in the firmware of the BCL 304*i*.*
Depending on firmware version, the start page may vary from that shown above.

The individual parameters are – where useful – graphically displayed in order to better illustrate the meaning of the what are often perceived as abstract parameters.

The result is an easy-to-use and practically-oriented user interface!

9.4 Short description of the webConfig tool

The webConfig tool has 5 main menus:

- Home
  with information on the connected BCL 304*i* as well as on installation. This information corresponds to the information in this handbook.
- Alignment
  for manually starting read processes and for aligning the bar code reader. The results of the read processes are displayed immediately. As a result, this menu item can be used to determine the optimum installation location.
- Configuration
  for adjusting decoding, for data formatting and output, switching inputs/outputs, communication parameters and interfaces, etc. …
- Diagnostics
  for event logging of warnings and errors.
- Maintenance
  for updating the firmware.

The user interface of the webConfig tool is largely self-explanatory.

9.4.1 Module overview in the Configuration menu

The adjustable parameters of the BCL 304*i* are clustered in modules in the Configuration menu.

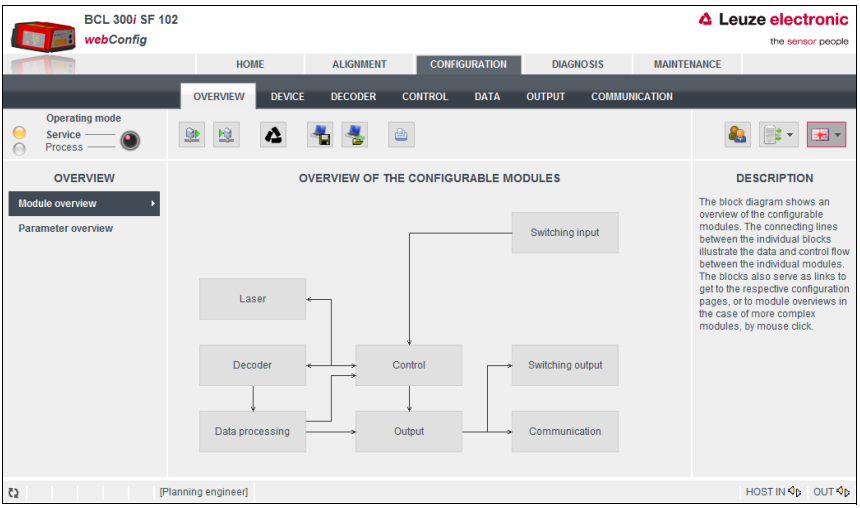

Figure 9.3: Module overview in the webConfig tool

Notice!

The webConfig tool is completely contained in the firmware of the BCL 304i. Depending on firmware version, the module overview may vary from that shown above.

The individual modules and their relationships to one another are graphically displayed in the module overview. The display is context sensitive, i.e. click a module to directly access the corresponding submenu.

Overview of the configurable modules

- Device:
  Configuration of the **switching inputs and outputs**
- Decoder:
  Configuration of the decoder table, such as **code type**, **number of digits**, etc.
- Control:
  Configuration of **activation** and **deactivation**, e.g. **auto-activation**, **AutoReflAct**, etc.
- Data:
  Configuration of **code content,** such as **filtering**, **segmentation of bar code data**, etc.
- Output:
  Configuration of **data output**, **header**, **trailer**, **reference code**, etc.
- Communication
  Configuration of the **host interface** and the **service interface**
- Oscillating mirror:
  Configuration of the **oscillating mirror settings**

Notice!

*On the right side of the user interface of the webConfig tool, you will find a description of the individual modules and functions as a help text in the **Information** area.*

The webConfig tool is available for all bar code readers of the BCL 300*i* series. Because configuration of the BCL 304*i* PROFIBUS device is performed via the PROFIBUS, the module overview shown in the webConfig tool is, in this case, used only for displaying and checking the configured parameters.

Notice!

If parameters are set via webConfig which are simultaneously activated via the GSD file modules, the settings made via the PLC (GSD) always prevail.

The current configuration of your BCL 304*i* is loaded upon startup of the webConfig tool. If you change the configuration via the PROFIBUS while the webConfig tool is running, you can use the "Load parameter from device" button after making the changes to update the display in the webConfig tool. This button appears in the upper left in the center window area in all submenus of the Configuration main menu.

10 Commissioning and configuration

Attention Laser!

Observe the safety notices in chapter 2!

10.1 General information on the PROFIBUS implementation of the BCL 304*i*

10.1.1 Communication profile

The **communication profile** defines how participants serially transmit their data via the transmission medium. The **BCL 304*i*** supports the communication profile for automation systems and **D**ecentral **P**eriphery -> **PROFIBUS DP**.

DP communication profile

The **PROFIBUS DP** communication profile is designed for efficient data exchange on the field level. Data exchange with the decentral devices occurs primarily cyclically. The necessary communication functions are defined in the **DP** base functions. The **DP** optionally offers acyclic communication services as well. These are used for configuring, operating, observing and alarm handling.

In order to be able to perform data exchange, services are defined which **PROFIBUS DP** differentiates between on the basis of the data access points transmitted in the telegram header.

The BCL 304*i* profile is based on the PROFIBUS profile for identification systems.

10.1.2 Bus-access protocol

The PROFIBUS communication profiles (DP,FMS) use a uniform bus-access process. It is implemented by layer 2 of the OSI model. The bus-access control (MAC) defines the process for specifying the point in time at which a network device can transmit data. It must ensure that no more than one participant has permission to transmit at any given time. The PROFIBUS bus-access process includes the token-passing process and the master-slave process.

Process	Description	BCL 304*i*
Token-passing process	With this process, the bus-access permission is distributed by means of a token. The participant obtains permission to transmit with the token. The token wanders between the master devices in the ring in a permanently defined time frame. This type of bus access is used for communication between the masters.	No
Master-slave process	Various slave devices are assigned to a master. The master can address the slaves which are assigned to it and fetch messages from them. The master always has the initiative.	Yes

Table 10.1: PROFIBUS bus-access processes

The two processes can also be mixed in order to create a multi-master system. The BCL 304*i* functions both in a mono-master system as well as in a multi-master system.

Notice!

In 2007, the PROFIBUS DP was extended by the DPV2 specification. The specification will then also permit slave-slave communication. The BCL 304i does not support this type of communication.

10.1.3 Device types

With the PROFIBUS DP, there are two types of master and one type of slave:

Device type	Description	BCL 304*i*
Class 1 master (DPM1)	Class 1 masters are defined for the user-data communication. (e.g.PLC,PC)	
Class 2 Master (DPM2)	Class 2 masters are defined for commissioning purposes. Additional services facilitate easier configuration as well as device diagnosis.	
Slave	The slave is a peripheral device which makes available input data for the control and receives output data from the control.	X

Table 10.2: PROFIBUS DP master and slave types

Notice!

The device is defined as a slave in the device master file (GSD file) of the BCL 304i!

10.1.4 Expanded DP functions

The PROFIBUS standard has been expanded (DPV1) and, in addition to the cyclic services, also offers acyclic services. These services operate in parallel with the cyclic user-data communication. Masters and slaves can use additional READ and WRITE functions as well as ALARM functions. This is intended especially for operation with an engineering tool (DP-master class 2, DPM2) in order to change parameters and read out status information during normal operation.

The acyclic services operate with lower priority. The functions are different for the various master classes.

Function	Slave SAP	Description	BCL 304*i*
MSAC1_Read	SAP51	Read datablock at slave	Yes 1)
MSAC1_Write	SAP51	Write datablock at slave	Yes 2)

Table 10.3: Services for DPVM1 class 1 and slaves

1) For I&M functionality
2) For I&M functionality

Function	Slave SAP	Description	BCL 304*i*
MSAC2_Read	51	Read datablock at slave	No
MSAC2_Write	51	Write datablock at slave	No
MSAC2_Initiate	49	Establish connection between DPM2 and slave	No
MSAC2_Abort	0 … 48	Establish connection between DPM2 and slave	No
MSAC1_Data_Transport	0 … 48	Write data to slave and read data from slave in a service cycle	No

Table 10.4: Services for DPVM1 class 2 and slaves

Notice!

*All expanded services are **not** implemented for the first BCL 304i PROFIBUS profile.*

10.1.5 Automatic baud rate detection

The PROFIBUS implementation of the BCL 304*i* features automatic baud rate detection. The BCL 304*i* uses this function and offers no possibility for manual or permanent adjustment. The following baud rates are supported:

Baud rate kBit/s	9,6	19,2	45,45	93,75	187,5	500	1500	3000	6000	12000

Automatic baud rate detection is indicated in the device master file of the BCL 304*i*: **Auto_Baud_supp = 1**

10.2 Measures to be performed prior to the initial commissioning

- *Before commissioning, familiarize yourself with the operation and configuration of the BCL 304i.*
- *Before connecting the supply voltage, recheck all connections and ensure that they have been properly made.*

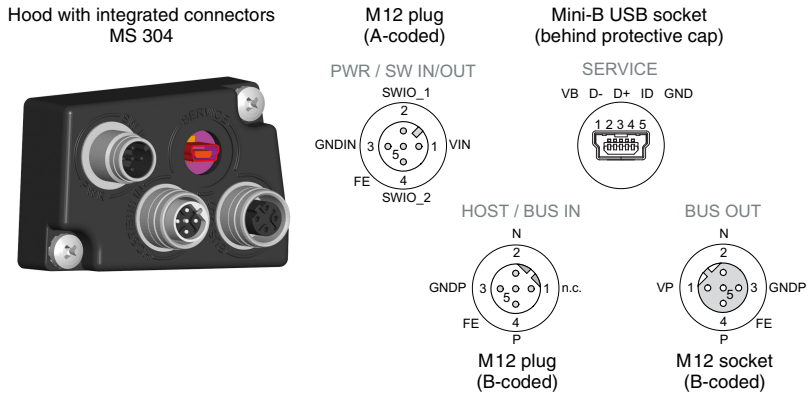

Figure 10.1: BCL 304*i* - MS 304 hood with integrated M12 connectors

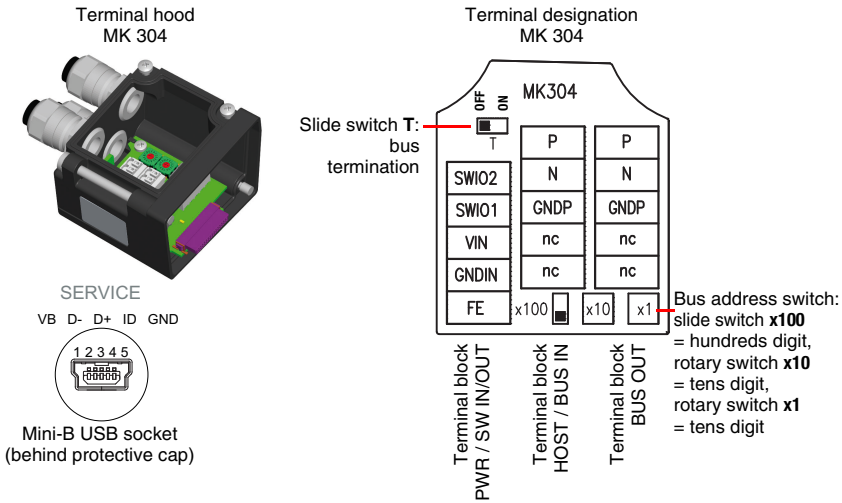

Figure 10.2: BCL 304*i* - MK 304 terminal hood with spring-loaded terminals

- *Check the applied voltage. It must be in the range between +18V … 30VDC.*

Connecting functional earth FE

↳ *Ensure that the functional earth (FE) is connected correctly.*

Unimpaired operation is only guaranteed when the functional earth is connected properly. All electrical disturbances (EMC couplings) are discharged via the functional earth connection.

10.3 Setting of the PROFIBUS address

In the MS 304 and MK 304, the PROFIBUS address can be set using two rotary switches and a slide switch.

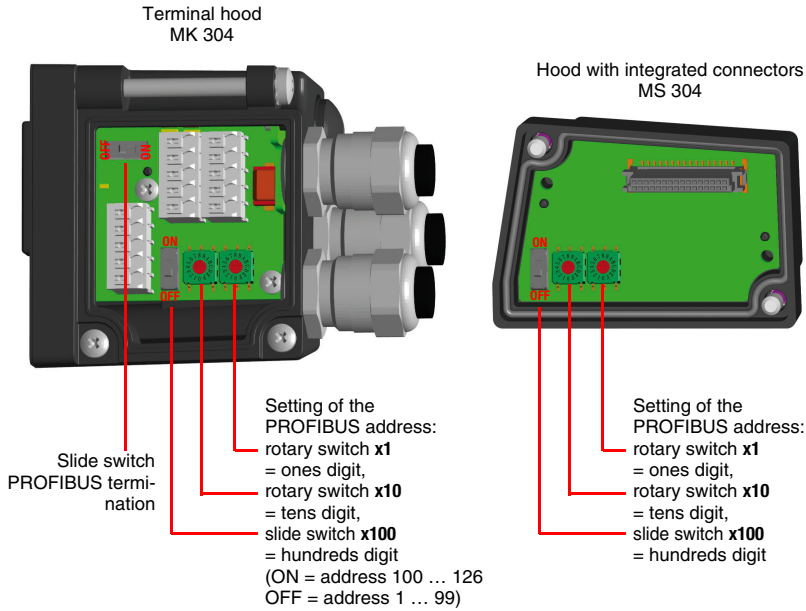

Figure 10.3: BCL 304*i* - setting of the PROFIBUS address

The set address must be greater than or equal to 1 and less than or equal to 126. On delivery, the address is set to 126. Address 126 may not be used for data communication. It may only be used temporarily for commissioning.

The address has be set individually in the connection hood of every BCL 304*i* type bar code reader.

Notice!

The BCL 304i does not support automatic address assignment via the PROFIBUS!

10.4 Commissioning via the PROFIBUS

10.4.1 General information

The BCL 304*i* is designed as a PROFIBUS slave device. The functionality of the device is defined via parameter sets which are clustered in modules. The modules are included in a GSD file, which is supplied as an integral part of the device. By using a user-specific configuration tool, such as, e.g., Simatic Manager for the programmable logic control by Siemens, the required modules are integrated into a project during commissioning and its settings and parameters are adjusted accordingly. These modules are provided by the GSD file.

Notice!

All input and output modules described in this documentation are described from the controller's perspective:

- ***Input data arrives at the controller.***
- ***Output data is sent out by the controller.***

10.4.2 Preparing the control system for consistent data transmission

During programming the control system must be prepared for the consistent data transmission. This varies from control system to control system. The following possibilities are available for the Siemens control systems.

S7

The specific function blocks **SFC 14** for input data and **SFC 15** for output data must be integrated in the program. These are standard function blocks and are used to facilitate consistent data transmission.

10.4.3 General information on the GSD file

You can find the GSD file at
www.leuze.com -> Download -> identify -> Stationary and hand-held bar code readers.

All data in modules required for operating the **BCL 304*i*** is described in this file. These are input and output data and device parameters for the functioning of the **BCL 304*i*** and the definition of the control and status bits.

If parameters are changed, e.g., in the project tool, these changes are stored on the PLC side in the project, not in the GSD file. The GSD file is a certified and integral part of the device and must not be changed manually. The file is not changed by the system either.

The functionality of the **BCL 304*i*** is defined via GSD parameter sets. The parameters and their functions are structured in the GSD file using module. A user-specific configuration tool is used during PLC program creation to integrate the required modules and configure them appropriately for their respective use. During operation of the **BCL 304*i*** on the PROFIBUS, all parameters are set to default values. If these parameters are not changed by the user, the device functions with the default settings delivered by Leuze electronic.

For the default settings of the **BCL 304*i***, please refer to the following module descriptions.

Notice!

Please note that the set data is overwritten by the PLC!
*Some controls make available a so-called "universal module". This module must not be activated for the **BCL 304*i***!*

From the perspective of the device, a distinction is made between PROFIBUS parameters and internal parameters. PROFIBUS parameters are all parameters that can be changed via the PROFIBUS and are described in the following modules. Internal parameters, on the other hand, can only be changed via a service interface and retain their value even following a PROFIBUS configuration.

During the configuration phase, the BCL receives a parameter telegram from the master. Before this is evaluated and the respective parameter values are set, all PROFIBUS parameters are reset to default values. This ensures that the parameters of modules that are not selected are set to the default values.

Notice!

This does not affect modules 1-4 for the code table extension. By default, all but the first code table entry are locked. If "no code" is selected here, all subsequent code tables are deactivated (see chapter 10.6.1 "Modules 1-4 – Code table extensions 1 to 4").

10.4.4 Permanently defined parameters / device parameters

On the PROFIBUS, parameters may be stored in modules or may be defined permanently in a PROFIBUS participant.

The permanently defined parameters are called "common" parameters or device-specific parameters, depending on the configuration tool.

These parameters must always be present. They are defined outside of the modules and are permanently anchored in the telegram header.

Simatic S7 Controller

In Simatic Manager, the permanently defined parameters are set via object properties of the device. The module parameters are set via the module list of the selected device. By selecting the project properties of a module, the respective parameters may be set if required.

The following list contains the parameters that are permanently defined in the BCL 304*i* but are configurable. These parameters always exist and are available independent of the modules.

Parameter	Description	Addr.	Data type	Value range	Default	Unit
Profile number	Number of the activated profile. For BCL 304*i*: constant with value 0	0	Byte	0 … 255	0	-
Code type 1	Released code type; no code means that all subsequent code tables are also deactivated. The valid number of digits also depends on the code type.	1.0 … 1.5	BitArea	0: 0: No code 1: 2/5 Interleaved 2: Code39 2: Code32 6: UPC, UPCE 7: EAN8, EAN13 8: Code128 10: EAN Addendum 11: Codabar 12: Code93 13: GS1 Data Bar OMNIDIRECTIONAL 14: GS1 Data Bar LIMITED 15: GS1 Data Bar EXPANDED	1	-
Number-of-digits mode	Specifies how the subsequent numbers of digits are to be interpreted.	2.6	Bit	0: Enumeration 1: Range	0	-
Digits 1	Decodable number of digits; in the case of a range, this number defines the lower limit. [1)]	2.0 … 2.5	UNSIGNED8	0 … 63	10	-
Digits 2	Decodable number of digits; in the case of a range, this number defines the upper limit.	3	UNSIGNED8	0 … 63	0	-
Digits 3	Decodable number of digits in the **enumeration** mode.	4	UNSIGNED8	0 … 63	0	-
Digits 4	Decodable number of digits in the **enumeration** mode.	5	UNSIGNED8	0 … 63	0	-
Digits 5	Decodable number of digits in the **enumeration** mode.	6	UNSIGNED8	0 … 63	0	-
Reading reliability	Min. reading reliability to be achieved in order to output a read code.	7	UNSIGNED8	1 … 100	4	-

Table 10.5: "Common" Parameters

Parameter	Description	Addr.	Data type	Value range	Default	Unit
Check digit procedure	Used check digit procedure	8.0 … 8.6	BitArea	0: Standard check digit evaluation 1: No check digit verification 2: MOD10 Weight 3 3: MOD10 Weight 2 4: MOD10 Weight 4_9 5: MOD11 Cont 6: MOD43 7: MOD16	0	-
Check digit output	Turns the check digit output on or off.	8.7	Bit	Check digit output 0: Standard 1: Not standard	0	-
Code type 2	See code type 1	9.0 … 9.5	BitArea	See code type 1	0	-
Number-of-digits mode 2	Specifies how the subsequent numbers of digits are to be interpreted.	10.6	Bit	0: Enumeration 1: Range	0	-
Digits 2.1	Decodable number of digits; in the case of a range, this number defines the lower limit.	10.0 … 10.5	UNSIGNED8	0 … 63	0	-
Digits 2.2	Decodable number of digits; in the case of a range, this number defines the upper limit.	11	UNSIGNED8	0 … 63	0	-
Digits 2.3	Decodable number of digits in the **enumeration** mode.	12	UNSIGNED8	0 … 63	0	-
Digits 2.4	Decodable number of digits in the **enumeration** mode.	13	UNSIGNED8	0 … 63	0	-
Digits 2.5	Decodable number of digits in the **enumeration** mode.	14	UNSIGNED8	0 … 63	0	-
Reading reliability 2	Min. reading reliability to be achieved in order to output a read code.	15	UNSIGNED8	1 … 100	4	-
Check digit procedure 2	Used check digit procedure	16.0 … 16.6	BitArea	0: Standard check digit evaluation 1: No check digit verification 2: MOD10 Weight 3 3: MOD10 Weight 2 4: MOD10 Weight 4_9 5: MOD11 Cont 6: MOD43 7: MOD16	0	-
Check digit output 2	Turns the check digit output on or off.	16.7	Bit	Check digit output 0: Standard 1: Not standard	0	-

Table 10.5: "Common" Parameters

Parameter	Description	Addr.	Data type	Value range	Default	Unit
Code type 3	See code type 1.	17.0 … 17.5	BitArea	See code type 1	0	-
Number-of-digits mode 3	Specifies how the subsequent numbers of digits are to be interpreted.	18.6	Bit	0: Enumeration 1: Range	0	-
Digits 3.1	Decodable number of digits; in the case of a range, this number defines the lower limit.	18.0 … 18.5	UNSIGNED8	0 … 63	0	-
Digits 3.2	Decodable number of digits; in the case of a range, this number defines the upper limit.	19	UNSIGNED8	0 … 63	0	-
Digits 3.3	Decodable number of digits in the **enumeration** mode.	20	UNSIGNED8	0 … 63	0	-
Digits 3.4	Decodable number of digits in the **enumeration** mode.	21	UNSIGNED8	0 … 63	0	
Digits 3.5	Decodable number of digits in the **enumeration** mode.	22	UNSIGNED8	0 … 63	0	-
Reading reliability 3	Min. reading reliability to be achieved in order to output a read code.	23	UNSIGNED8	1 … 100	4	-
Check digit procedure 3	Used check digit procedure.	24.0 … 24.6	BitArea	0: Standard check digit evaluation 1: No check digit verification 2: MOD10 Weight 3 3: MOD10 Weight 2 4: MOD10 Weight 4_9 5: MOD11 Cont 6: MOD43 7: MOD16	0	-
Check digit output 3	Turns the check digit output on or off.	24.7	Bit	Check digit output 0: Standard 1: Not standard	0	-

Table 10.5: "Common" Parameters

Parameter	Description	Addr.	Data type	Value range	Default	Unit
Code type 4	See code type 1.	25.0 … 25.5	BitArea	See code type 1	0	-
Number-of-digits mode 4	Specifies how the subsequent numbers of digits are to be interpreted.	26.6	Bit	0: Enumeration 1: Range	0	-
Digits 4.1	Decodable number of digits; in the case of a range, this number defines the lower limit.	26.0 … 26.5	UNSIGNED8	0 … 63	0	-
Digits 4.2	Decodable number of digits; in the case of a range, this number defines the upper limit.	27	UNSIGNED8	0 … 63	0	-
Digits 4.3	Decodable number of digits in the **enumeration** mode.	28	UNSIGNED8	0 … 63	0	-
Digits 4.4	Decodable number of digits in the **enumeration** mode.	29	UNSIGNED8	0 … 63	0	
Digits 4.5	Decodable number of digits in the **enumeration** mode.	30	UNSIGNED8	0 … 63	0	-
Reading reliability 4	Min. reading reliability to be achieved in order to output a read code.	31	UNSIGNED8	1 … 100	4	-
Check digit procedure 4	Used check digit procedure.	32.0 … 32.6	BitArea	0: Standard check digit evaluation 1: No check digit verification 2: MOD10 Weight 3 3: MOD10 Weight 2 4: MOD10 Weight 4_9 5: MOD11 Cont 6: MOD43 7: MOD16	0	-
Check digit output 4	Turns the check digit output on or off.	32.7	Bit	Check digit output 0: Standard 1: Not standard	0	-

Table 10.5: "Common" Parameters

1) Specifying a 0 for the number of digits means that this entry is ignored for the device.

Parameter length: 33 byte

Input data

None

Output data

None

Notice on number of digits:

If 0 is specified in a field for the number of digits, the corresponding parameter is ignored by the device firmware.

Example:

For a code table entry x, the two code lengths 10 and 12 are to be enabled. For this purpose, the following number of digit entries are necessary:

Number of digits mode x = 0 (enumeration)

Number of digits x.1 = 10

Number of digits x.2 = 12

Number of digits x.3 = 0

Number of digits x.4 = 0

Number of digits x.5 = 0

10.5 Overview of the project modules

In the current version, a total of 52 modules are available for use. A **Device Module** (see "Permanently defined parameters / device parameters" on page 94) is used for basic scanner configuration BCL 304*i* and is permanently integrated into the project. Further modules may be included into the project according to requirements and application.

The modules fall into the following categories:

- Parameter module for the configuration of the BCL 304*i*
- Status or control modules that influence the input/output data.
- Modules that may include both parameters and control or status information.

A PROFIBUS module defines the existence and meaning of the input and output data. In addition, it defines the necessary parameters. The arrangement of the data within a module is defined.

The composition of the input/output data is defined via the module list.

The BCL 304*i* interprets the incoming output data and triggers the appropriate reactions in the BCL 304*i*. The interpreter for processing the data is adapted to the module structure during initialization.

The same applies for the input data. Using the module list and the defined module properties, the input data string is formatted and referenced to the internal data.

During cyclic operation, the input data is then passed on to the master.

Notice!

The modules can be grouped together in any order in the engineering tool. The BCL 304i offers 52 different modules. Each of these modules may only be selected once; otherwise, the BCL 304i ignores the configuration.
The BCL 304i checks its max. permissible number of modules. In addition, it checks the max. permissible total length (244 bytes each) of the input and output data over all selected modules.
The specific limits of the individual modules of the BCL 304i are declared in the GSD file.

The following module overview shows the characteristics of the individual modules:

Module	Description	Module identifier	Para-meter 1)	Outp. data	Inp. data
Decoder					
Code table extension 1	Extension of the existing code table	1	8	0	0
Code table extension 2	Extension of the existing code table	2	8	0	0
Code table extension 3	Extension of the existing code table	3	8	0	0
Code table extension 4	Extension of the existing code table	4	8	0	0
Code type properties	The module permits changing the muted zones as well as the line-gap ratios	5	6	0	0
Code fragment technology	Support of code fragment technology	7	3	0	0
Control					
Activations	Control bits for activation of the standard reading operation	10	1	0	1
Reading gate control	Extended control of the reading gate	11	6	0	0
Multilabel	Output of several bar codes per reading gate	12	2	1	0
Fragmented read result	Transmission of the read results in the fragmented mode	13	1	2	0
Interlinked read result	Interlinking of the individual read results within one reading gate	14	1	0	0
Result Format					
Decoder state	Status display - decoding	20	0	1	0
Decoding result 1	Bar code information 4 bytes max.	21	0	6	0
Decoding result 2	Bar code information 8 bytes max.	22	0	10	0
Decoding result 3	Bar code information 12 bytes max.	23	0	14	0
Decoding result 4	Bar code information 16 bytes max.	24	0	18	0
Decoding result 5	Bar code information 20 bytes max.	25	0	22	0
Decoding result 6	Bar code information 24 bytes max.	26	0	26	0
Decoding result 7	Bar code information 28 bytes max.	27	0	30	0
Data formatting	Specification for formatting the data output	30	23	0	0
Reading gate number	Number of the reading gate since system start-up	31	0	2	0
Number of scans per reading gate	Number of scans per reading gate	32	0	2	0
Code position	Relative position of the bar code label in the scanning beam	33	0	2	0
Reading reliability	Calculated reading reliability for the transmitted bar code.	34	0	2	0
Scans per bar code	Number of scans between the first and the last time of detecting the bar code	35	0	2	0
Scans with information	Number of scans with processed information	36	0	2	0
Decoding quality	Quality of the read result	37	0	1	0
Code direction	Orientation of the bar code	38	0	1	0
Number of digits	Number of digits in the bar code	39	0	1	0
Code type	Bar code type	40	0	1	0
Code position in the swivel range	Code position in the swivel range of an oscillating mirror device	41	0	2	0
Data Processing					
Characteristics filter	Configuration of the characteristics filter	50	TBD	TBD	TBD
Data filtering	Configuration of the data filtering	51	60	0	0
Segmentation acc. to the EAN process	Activation and configuration of the segmentation acc. to the EAN process	52	27	0	0
Segmentation via fixed positions	Activation and configuration of the segmentation via fixed positions	53	37	0	0
Segmentation acc. to identifier and separator	Activation and configuration of the segmentation acc. to identifier and separator	54	29	0	0
String handling parameter	Definition of placeholder characters for bar code segmentation, filtering, completion and reference code processing	55	3	0	0

Table 10.6: Module overview

Module	Description	Module identifier	Para-meter 1)	Outp. data	Inp. data
Device-Functions					
Device status	Display of the device status as well as control bits for reset and standby	60	0	1	1
Laser control	Switch-on and switch-off positions of the laser	61	4	0	0
Alignment	Alignment mode	63	0	1	1
Oscillating mirror	Configuration of the oscillating mirror	64	6	0	0
Switching inputs/outputs SWIO					
Switching input/output SWIO1	Parameter settings SWIO1	70	23	0	0
Switching input/output SWIO2	Parameter settings SWIO2	71	23	0	0
SWIO status and control	Handling of switching input and switching output signals	74	0	2	2
Data output					
Sorting	Sorting support	80	3	0	0
Reference code comparator 1	Definition of the operation mode of reference code comparator 1	81	8	0	0
Reference code comparator 2	Definition of the operation mode of reference code comparator 2	82	8	0	0
Reference code comparison pattern 1	Definition of the 1st comparison pattern	83	31	0	0
Reference code comparison pattern 2	Definition of the 2nd comparison pattern	84	31	0	0
Special Functions					
Status and control	Grouping of multiple status and control bits	90	0	1	0
AutoReflAct	Automatic reflector activation	91	2	0	0
AutoControl	Automatic monitoring of the reading properties	92	3	1	0

Table 10.6: Module overview

1) The number of parameter bytes does not include the constant module number, which is always transmitted in addition.

Notice!

For the standard case, at least module 10 (activation) and one of modules 21 … 27 (decoding result 1 … 7) should be integrated.

10.6 Decoder modules

10.6.1 Modules 1-4 – Code table extensions 1 to 4

Description

The modules extend the code type tables of the device parameters and permit the additional definition of further 4 code types together with the respective number of digits.

Parameter

Parameter	Description	Rel. addr.	Data type	Value range	Default	Unit
Code type	Released code type; no code means that all subsequent code tables are also deactivated. The valid number of digits also depends on the code type.	0.0 … 0.5	BitArea	0: 0: No code 1: 2/5 Interleaved 2: Code39 3: Code32 6: UPC, UPCE 7: EAN8, EAN13 8: Code128 10: EAN Addendum 11: Codabar 12: Code93 13: GS1 Data Bar OMNIDIRECTIONAL 14: GS1 Data Bar LIMITED 15: GS1 Data Bar EXPANDED	0	-
Number-of-digits mode	Interpretation of the number of digits.	1.6	Bit	0: Enumeration 1: Range	0	-
Digits 1[1)]	Decodable number of digits; in the case of a range, this number defines the lower limit.	1.0 … 1.5	UNSIGNED8	0 … 63	0	-
Digits 2	Decodable number of digits; in the case of a range, this number defines the upper limit.	2	UNSIGNED8	0 … 63	0	-
Digits 3	Decodable number of digits in the enumeration mode.	3	UNSIGNED8	0 … 63	0	-
Digits 4	Decodable number of digits in the enumeration mode.	4	UNSIGNED8	0 … 63	0	-
Digits 5	Decodable number of digits in the enumeration mode.	5	UNSIGNED8	0 … 63	0	-

Table 10.7: Parameters for modules 1-4

Parameter	Description	Rel. addr.	Data type	Value range	Default	Unit
Reading reliability	Min. reading reliability to be achieved in order to output a read code.	6	UNSIGNED8	1 … 100	4	-
Check digit procedure	Used check digit procedure.	7.0 … 7.6	BitArea	0: Standard check digit evaluation 1: No check digit verification 2: MOD10 Weight 3 3: MOD10 Weight 2 4: MOD10 Weight 4_9 5: MOD11 Cont 6: MOD43 7: MOD16	0	-
Check digit output	Turns the check digit output on or off. >Standard means that the check digit is transmitted according to the applicable standard for the selected code type If **no check digit transmission is intended** for the selected code type, then "**Standard**" means that the check digit is **not** transmitted and "**Not Standard**" means that the check digit is transmitted anyway.	7.7	Bit	Check digit output 0: Standard 1: Not standard	0	-

Table 10.7: Parameters for modules 1-4

1) Cf. in Permanently defined parameters / device parameters section 10.4.4 the notice on number of digits.

Parameter length

8 bytes

Input data

None

Output data

None

10.6.2 Module 5 – Code type features (symbology)

Description

The module defines extended features for various code types.

Parameter

Parameter	Description	Addr.	Data type	Value range	Default	Unit
Maximum width deviation	Max. permitted width deviation of a character in percent of the directly adjacent character.	0	UNSIGNED8	0 … 100	15	%
Code 39 max. element ratio	Permissible ratio between maximum and minimum element of Code 39.	1	UNSIGNED8	0 … 255	8	-
Code 39 character gap	Permissible ratio for the gap between two characters for Code 39.	2	UNSIGNED8	0 … 255	3	-
Codabar max. element ratio	Permissible ratio between maximum and minimum element of the Codabar code.	3	UNSIGNED8	0 … 255	8	-
Codabar character gap	Permissible ratio for the gap between two characters for the Codabar code.	4	UNSIGNED8	0 … 255	3	-
Codabar Monarch Mode	The decoding of a Monarch bar code as Codabar bar code can be switched on or off.	5.0	Bit	0: Off 1: On	0	-
Codabar start/ stop character	Switches the transmission of a start and stop character for the Codabar code on and off.	5.1	Bit	0: Off 1: On	0	-
UPC-E extension	Switches the extension of a UPC-E code to a UPC-A result on and off.	5.4	Bit	0: Off 1: On	0	-
Code 128: activate EAN header	Switches the output of the EAN header on and off.	5.5	Bit	0: Off 1: On	1	-
Code 39 conversion	Defines the conversion method used for Code 39.	5.6 … 5.7	BitArea	0: Standard (usual conversion method) 1: Standard ASCII (combination of standard method and ASCII method) 2: ASCII (This conversion method uses the entire ASCII character set)	0	-

Table 10.8: Parameters for module 5

Parameter length

6 byte

Input data

None

Output data

None

10.6.3 Module 7 – Code fragment technology

Description

Module for supporting the code fragment technology.

Parameter

Parameter	Description	Addr.	Data type	Value range	Default	Unit
Maximum width ratio	The maximum width ratio is used to determine the light zones. The light zones identify the beginning or end of patterns.	0	UNSIGNED8	0 … 255	13	-
Minimum number of elements	A pattern must have at least this minimum number of duo-elements, i.e. no patterns which have fewer duo-elements.	1 … 2	UNSIGNED16	2 … 400	6	-
Code fragment mode	This parameter can be used to switch CRT mode on and off.	3.0	Bit	0: Switched off 1: Switched on	1	-
Processing end at end of label	If this parameter is set, a decoded bar code is only completely decoded after the scanning beam has exited the entire bar code.	3.2	Bit	0: Switched off 1: Switched on	0	-

Table 10.9: Parameters for module 7

Parameter length

4 byte

Input data

None

Output data

None

Processing end at end of label:

If this parameter is set, a decoded bar code is only completely decoded after the scanning beam has exited the entire bar code. This mode is useful if the quality of the bar code is to be assessed, since more scans are now available for the quality evaluation of the bar code.

This parameter should be set if the AutoControl function is activated (see chapter 10.15.3 "Module 92 – AutoControl"). If the parameter is not set, the bar code is immediately detected and processed further as soon as all necessary bar code elements are available.

10.7 Control modules

10.7.1 Module 10 – Activations

Description

The module defines the control signals for the reading operation of the bar code reader. It is possible to select between standard reading operation and handshake operation.

In handshake operation, the controller must acknowledge the data reception via the ACK bit before the new data is written into the input area.

After acknowledging the last decoding result, the input data is reset (filled with zeros).

Parameter

Parameter	Description	Addr.	Data type	Value range	Default	Unit
Mode	The parameter defines the mode in which the activation module is operated.	0	UNSIGNED8	0: Without ACK[1)] 1: With ACK[2)]	0	-

Table 10.10: Parameters for module 10

1) corresponds to BCL34 module 18
2) corresponds to BCL34 module 19

Parameter length

1 byte

Input data

None

Output data

Output data	Description	Addr.	Data type	Value range	Init value	Unit
Reading gate	Signal for activating the reading gate	0.0	Bit	1 -> 0: Reading gate off 0 -> 1: Reading gate active	0	-
	Free	0.1	Bit		0	-
	Free	0.2	Bit		0	-
	Free	0.3	Bit		0	-
Data acknowl-edgement	This control bit signals that the transmitted data have been processed by the master. Only relevant in handshake mode (with ACK).	0.4	Bit	0 -> 1: Data has been processed by the master 1 -> 0: Data has been processed by the master	0	-
Data reset	Deletes decoding results that may have been stored and resets the input data of all modules.	0.5	Bit	0 -> 1: Data reset	0	-
	Free	0.6	Bit			
	Free	0.7	Bit			

Table 10.11: Output data for module 10

Output data length

1 byte consistent

Notice!

If several bar codes are decoded in sequence without the acknowledge mode having been activated, the input data of the result modules are overwritten with the respective most recently read decoding result.
If a data loss in the control is to be avoided in such a case, mode 1 (with Ack) should be activated.
If multiple decoding results occur within one reading gate, it is possible - dependent on the cycle time - that only the last decoding result is visible on the bus. In this case, the acknowledge mode MUST be used. There is otherwise a risk of data loss.
Multiple, individual decoding results may occur within one reading gate if the *Module 12 – Multi-label* (see *chapter 10.7.3*) or one of the identifier modules (*see chapter 10.10 "Identifier"* beginning on *page 126*) is used.

Data reset behavior:

If the data reset control bit is activated, the following actions are carried out:

1. Deletion of decoding results that may still be stored.
2. Reset of module 13 - fragmented read result (see chapter 10.7.4), i.e., even a partially transmitted read result is deleted.
3. Deletion of the input data areas of all modules. Exception: The input data of module 60 - device status (see chapter 10.11.1) is not deleted. For the status byte of decoding result modules 20 … 27 (see chapter 10.8.2), the two toggle bytes and the reading gate status remain unchanged.

10.7.2 Module 11 – Reading gate control

Description

With the module, the reading gate control of the bar code reader can be adapted to the application. With different parameters from the bar code reader, a time-controlled reading gate may be created. In addition, it defines the internal criteria for the reading gate end and the completeness inspection.

Parameter

Parameter	Description	Addr.	Data type	Value range	Default	Unit
Automatic reading gate repeat	The parameter defines the automatic repeat of reading gates.	0	Byte	0: No 1: Yes	0	-
Reading gate end mode/ completeness mode	This parameter can be used to configure the completeness inspection.	1	Byte	0: **Independent of decoding**, i.e., the reading gate is not terminated prematurely. 1: **Dependent on decoding**, i.e, the reading gate is terminated if the configured number of bar codes to be decoded has been reached. 1) 2: **DigitRef table-dependent**, i.e., the reading gate is terminated if each bar code stored in the code type table has been decoded. 2) 3: **Ident list dependent**, i.e., the reading gate is terminated if each identifier stored in a list could be segmented via a respective bar code segmentation. 3) 4: **Reference code comparison**, i.e., the reading gate is terminated if a positive reference code comparison has taken place. 4)	1	-
Restart delay	The parameter specifies a time after which a reading gate is restarted. The BCL 304*i* generates its own periodic reading gate. The configured time is active only if the automatic reading gate repeat is switched on.	2	UNSIGNED16	0 … 65535	0	ms
Max. reading gate time when scanning	The parameter switches off the reading gate after the set time has elapsed, thus limiting the reading gate to the set period.	4	UNSIGNED16	1 … 65535 0: Reading gate deactivation is switched off.	0	ms

Table 10.12: Parameters for module 11

1) See "Module 12 – Multi-label" on page 109.
2) Corresponds to the settings carried out via the device module (chapter 10.4.4) or Modules 1-4 – Code table extensions 1 to 4.
3) See "Identifier" on page 126, modules 52-54 "Identifier filter string"
4) See Module 83 – Reference code comparison pattern 1 and Module 84 – Reference code comparison pattern 2.

Parameter length

6 byte

Input data

None

Output data

None

10.7.3 Module 12 – Multi-label

Description

The module permits the definition of multiple bar codes with a different number of digits and/ or code types in the reading gate and provides the necessary input data.

Parameter

Parameter	Description	Addr.	Data type	Value range	Default	Unit
Minimum number of bar codes	Minimum number of different bar codes scanned for per reading gate.	0	UNSIGNED8	0 … 64	1	-
Maximum number of bar codes	Maximum number of different bar codes scanned for per reading gate. Only if this number of bar codes has been reached, the reading gate is terminated prematurely 1).	1	UNSIGNED8	0 … 64	1	-

Table 10.13: Parameters for module 12

1) Compare with "Module 11 – Reading gate control" on page 107, parameter "reading gate termination mode"

Parameter length

2 bytes

Input data

Input data	Description	Addr.	Data type	Value range	Init value	Unit
Number of decoding results	Number of decoding results which have not been fetched.	0	UNSIGNED8	0 … 255	0	-

Table 10.14: Input data for module 12

Input data length

1 byte

Output data

None

This module is used to set the maximum and minimum number of bar codes which are to be decoded within a reading gate.

If parameter "minimum number of bar codes" = 0, it is not taken into account at the decoder controller. If it is not equal to 0, this means that the bar code reader expects a number of labels within the set range.

If the number of decoded bar codes is within the set limits, no additional "No Reads" are output.

Notice!

When using this module, the ACK mode should be activated (see Module 10 – Activations, "Mode" parameter). Otherwise there is a risk of losing decoding results if the control is not fast enough.

10.7.4 Module 13 – Fragmented read result

Description

The module defines the transfer of fragmented read results. To occupy few i/o-data, the read results may be split into several fragments with this module. The fragments can then be transmitted one after another with a handshake.

Parameter

Parameter	Description	Addr.	Data type	Value range	Default	Unit
Fragment length	The parameter defines the maximum length of the bar code information per fragment.	0	UNSIGNED8	1 … 28	0	-

Table 10.15: Parameters for module 13

Parameter length

1 byte

Input data

Input data	Description	Addr.	Data type	Value range	Init value	Unit
Fragment number	Current fragment number	0.0 … 0.3	Bitarea	0 … 15	0	-
Remaining fragments	Number of fragments which still have to be read for a complete result.	0.4 … 0.7	Bitarea	0 … 15	0	-
Fragment size	Fragment length, always corresponds to the configured fragment length, except for the last fragment.	1	UNSIGNED8	0 … 28	0	-

Table 10.16: Input data for module 13

Input data length

2 byte consistent

Output data

None

10.7.5 Module 14 – Interlinked read result

Description

This module is used to switch to a mode in which all decoding results within one reading gate are combined into a single read result.

Parameter

Parameter	Description	Addr.	Data type	Value range	Default	Unit
Delimiter	This parameter is used to define a delimiter that is inserted between two individual decoding results.	0	UNSIGNED8	1 … 255 0: No delimiter is used.	';'	-

Table 10.17: Parameters for module 13

Parameter length

1 byte

Input data

None

Output data

None

Notice!

An interlinked read result also requires Module 12 – Multi-label. In this mode, the additional information transmitted in modules 31ff relates to the last decoding result in the chain.

10.8 Result Format

In the following various modules for the output of decoding results are listed. They have the same structure but different output lengths. The PROFIBUS module concept does not cater for modules of variable data length.

Notice!

Modules 20 … 27 are, thus, to be regarded as alternatives and should not be used in parallel.
Modules 30 … 40, on the other hand, can be combined freely with the decoding result modules.

10.8.1 Module 20 – Decoder state

Description

The module indicates the state of the decoding and of the automatic decoder configuration.

Parameter

None

Input data

Input data	Description	Addr.	Data type	Value range	Init value	Unit
Reading gate state	The signal indicates the current state of the reading gate. 1)	0.0	Bit	0: Off 1: On	0	-
New result	The signal indicates whether a new decoding has occurred.	0.1	Bit	0: No 1: Yes	0	-
Result state	The signal indicates whether the bar code has been read successfully.	0.2	Bit	0: Successful reading 1: NOREAD	0	-
Further results in the buffer	The signal indicates whether further results are in the buffer.	0.3	Bit	0: No 1: Yes	0	-
Buffer overflow	The signal indicates that result buffers are occupied and the decoder rejects data.	0.4	Bit	0: No 1: Yes	0	-
New decoding	Toggle bit indicates whether decoding has occurred.	0.5	Bit	0->1: New result 1->0: New result	0	-
Result state	Toggle bit indicates that the bar code has not been read.	0.6	Bit	0->1: NOREAD 1->0: NOREAD	0	-
Waiting for acknowledgement	This signal represents the internal state of the control.	0.7	Bit	0: Base state 1: Control waiting for acknowledgement from the PROFIBUS master	0	-

Table 10.18: Input data for module 20

1) **Attention**: This does not necessarily correspond to the state at the time the bar code is scanned.

Input data length

1 byte

Output data

None

Remarks

The following bits are constantly updated, i.e. they are updated immediately after the respective event occurs:

Reading gate state

- Further results in the buffer
- Buffer overflow
- Waiting for acknowledgement

All other flags refer to the currently output decoding result.

If the input data is reset to the init. value (cf. "Module 30 – Data formatting" on page 116), the following bits are reset:

- New result
- Result state

All others remain unchanged.

Data reset behavior:

Upon data reset (see Module 10 – Activations), the input data is deleted, except for the reading gate status and the two toggle bits.

10.8.2 Modules 21-27 – Decoding result

Description

The module defines the transfer of the actually decoded read results. The data is transmitted consistently over the entire range.

Parameter

None

Input data

Module No.	Input data	Description	Addr.	Data type	Value range	Init value	Unit
21 … 27	Reading gate state	The signal indicates the current state of the reading gate.[1)]	0.0	Bit	0: Off 1: On	0	-
21 … 27	New result	Signal indicates whether a new decoding result is present.	0.1	Bit	0: No 1: Yes	0	-
21 … 27	Result state	Signal indicates whether the bar code has been read successfully.	0.2	Bit	0: Successful reading 1: NOREAD	0	-
21 … 27	Further results in the buffer	Signal indicates whether further results are in the buffer.	0.3	Bit	0: No 1: Yes	0	-
21 … 27	Buffer overflow	Signal indicates that result buffers are occupied and the decoder rejects data.	0.4	Bit	0: No 1: Yes	0	-
21 … 27	New result	Toggle bit, indicates that a new decoding result is present.	0.5	Bit	0->1: New result 1->0: New result	0	-
21 … 27	Result state	Toggle bit indicates that the bar code has not been read.	0.6	Bit	0->1: NOREAD 1->0: NOREAD	0	-
21 … 27	Waiting for acknowledgement	This signal represents the internal state of the control.	0.7	Bit	0: Base state 1: Control waiting for acknowledgement from the PROFIBUS master	0	-
21 … 27	Bar code data length	Data length of the actual bar code information. [2)]	1	UNSIGNED8	0-48	0	-
21	Data	Bar code information with a length of consistently 4 bytes.	2..	4x UNSIGNED8	0-FFh	0	-
22	Data	Bar code information with a length of consistently 8 bytes.	2..	8x UNSIGNED8	0-FFh	0	-
23	Data	Bar code information with a length of consistently 12 bytes.	2..	12x UNSIGNED8	0-FFh	0	-
24	Data	Bar code information with a length of consistently 16 bytes.	2..	16x UNSIGNED8	0-FFh	0	-
25	Data	Bar code information with a length of consistently 20 bytes.	2..	20x UNSIGNED8	0-FFh	0	-
26	Data	Bar code information with a length of consistently 24 bytes.	2..	24x UNSIGNED8	0-FFh	0	-
27	Data	Bar code information with a length of consistently 28 bytes.	2..	28x UNSIGNED8	0-FFh	0	-

Table 10.19: Input data for modules 21 … 27

1) Attention: This does not necessarily correspond to the state at the time the bar code is scanned

2) If the bar code information (bar code and, possibly, other items such as the check sum) fits in the selected module width, this value reflects the length of the transmitted data. A value larger than the module width indicates a loss of information caused by a module width which has been selected too small.

Input data

2 bytes consistently + 4..28 bytes of bar code information depending on the module

Output data

None

Remarks

The remarks for module 20 – decoder state, apply in an analogous manner.

In addition, all bytes beginning with address 1 are reset to the init. value.

Notice!

Shortening decoding results that are too long: If the bar code information (bar code possibly including supplementary information such as the check sum) does not fit in the selected module width, the decoding results are shortened. This shortening is either from the left or the right depending on the setting in Module 30 – Data formatting.

Shortening is indicated by the passed bar code data length.

10.8.3 Module 30 – Data formatting

Description

The module defines the output string for the case that the BCL 304*i* could not read a bar code. In addition, the initialization of the data fields and the definition of unused data ranges may be set.

Parameter

Parameter	Description	Addr.	Data type	Value range	Default	Unit
Text in the case of misreading	The parameter defines the output characters if no bar code could be read.	0	STRING 20 characters null terminated	1 … 20 bytes of ASCII characters	63 ("?")	-
Decoding result at reading gate start	The parameter defines the state of the data at the start of the reading gate.	20.5	Bit	0: Input data remain on the old value 1: Input data is reset to the init value	0	-
Data align-ment	The parameter defines the alignment of the data in the result field 1)	21.0	Bit	0: Left-justified 1: Right-justified	0	-
Fill mode	The parameter defines the fill mode for the unoccupied data ranges.	21.4 … 21.7	Bitarea	0: No fill up 3: Fill up to the transmission length	3	-
Fill character	The parameter defines the character which is used for filling up the data ranges.	22	UNSIGNED8	0 … FFh	0	-

Table 10.20: Parameters for module 30

1) and thus also controls possible shortening of a decoding result that is too large.

Parameter length

23 byte

Input data

None

Output data

None

Comment

The "decoding result at reading gate start" parameter is only taken into account if the "Without ACK" mode is set (cf. "Module 10 – Activations" on page 105).

10.8.4 Module 31 – Reading gate number

Description

The module defines input data for the communication of the number of reading gates since system start.

Parameter

None

Input data

Input data	Description	Addr.	Data type	Value range	Init value	Unit
Reading gate number	The BCL 304*i* transmits the current reading gate number. The reading gate number is initialized with the system start and is then incremented continuously. At 65535, an overflow occurs and the counter starts afresh from 0.	0 … 1	UNSIGNED16	0 … 65535	0	-

Table 10.21: Input data for module 31

Input data length

2 byte consistent

Output data

None

10.8.5 Module 32 – Reading gate time

Description

This module returns the time between opening and closing of the last reading gate.

Parameter

None

Input data

Input data	Description	Addr.	Data type	Value range	Init value	Unit
Opening duration of the reading gate	Opening duration of the last reading gate in ms.	0 … 1	UNSIGNED16	0 … 65535 If the range is exceeded, the value remains at 65535	0	ms

Table 10.22: Input data for module 32

Input data length

2 byte consistent

Output data

None

10.8.6 Module 33 – Code position

Description

The module defines input data for the communication of the relative bar code position in the laser beam.

Parameter

None

Input data

Input data	Description	Addr.	Data type	Value range	Init value	Unit
Code position	Relative position of the bar code in the scanner beam. The position is normalized to the zero position (middle position). Specified in 1/10 degrees.	0 … 1	SIGNED16	±450	0	1/10 degree

Table 10.23: Input data for module 33

Input data length

2 byte consistent

Output data

None

10.8.7 Module 34 – Reading reliability (equal scans)

Description

The module defines the input data for the communication of the calculated reading reliability. The value refers to the currently output bar code.

Parameter

None

Input data

Input data	Description	Addr.	Data type	Value range	Init value	Unit
Reading reliability (Equal scans)	Calculated reading reliability for the transmitted bar code.	0 … 1	UNSIGNED16	0 … 65535	0	-

Table 10.24: Input data for module 34

Input data length

2 byte consistent

Output data

None

10.8.8 Module 35 – Bar code length

Description

The module defines the input data for the communication of the length of the currently output bar code.

Parameter

None

Input data

Input data	Description	Addr.	Data type	Value range	Init value	Unit
Bar code length	Length/duration of the currently output bar code, beginning with the code position specified in module 35 in 1/10 degrees.	0 … 1	UNSIGNED16	1 … 900	1	1/10 degree

Table 10.25: Input data for module 35

Input data length

2 byte consistent

Output data

None

10.8.9 Module 36 – Scans with information

Description

The module defines input data for the communication of the calculated number of scans which provided information contributing to the result of the bar code.

Parameter

None

Input data

Input data	Description	Addr.	Data type	Value range	Init value	Unit
Scans with information per bar code	See above	0 … 1	UNSIGNED16	0 … 65535	0	-

Table 10.26: Input data for module 36

Input data length

2 byte consistent

Output data

None

10.8.10 Module 37 – Decoding quality

Description

The module defines input data for the communication of the calculated decoding quality of the currently transmitted bar code.

Parameter

None

Input data

Input data	Description	Addr.	Data type	Value range	Init value	Unit
Decoding quality	Decoding quality of the transmitted bar code	0	UNSIGNED8	0 … 100	0	1%

Table 10.27: Input data for module 37

Input data length

1 byte consistent

Output data

None

10.8.11 Module 38 – Code direction

Description

The module defines input data for the communication of the detected code direction of the currently transmitted bar code.

Parameter

None

Input data

Input data	Description	Addr.	Data type	Value range	Init value	Unit
Code direction	Code direction of the transmitted bar code	0	UNSIGNED8	0: Normal 1: Inverted 2: Unknown	0	-

Table 10.28: Input data for module 38

Input data length

1 byte

Output data

None

Comment:

A decoding result of type "No Read" has as code direction the value 2 = unknown!

10.8.12 Module 39 – Number of digits

Description

The module defines input data for the communication of the number of digits of the currently transmitted bar code.

Parameter

None

Input data

Input data	Description	Addr.	Data type	Value range	Init value	Unit
Number of digits	Number of digits of the transmitted bar code	0	UNSIGNED8	0 … 48	0	-

Table 10.29: Input data for module 39

Input data length

1 byte

Output data

None

10.8.13 Module 40 – Code type

Description

The module defines the input data for the communication of the code type of the currently transmitted bar code.

Parameter

None

Input data

Input data	Description	Addr.	Data type	Value range	Init value	Unit
Code type	Code type of the transmitted bar code	0	UNSIGNED8	0: 0: No code 1: 2/5 Interleaved 2: Code39 6: UPC, UPCE 7: EAN8, EAN13 8: Code128, EAN128 10: EAN Addendum 11: Codabar 12: Code93 13: RSS-14 14: RSS Limited 15: RSS Expanded	0	-

Table 10.30: Input data for module 40

Input data length

1 byte

Output data

None

10.8.14 Module 41 – Code position in the swivel range

Description

The module defines input data for the communication of the relative bar code position in the swivel range of an oscillating mirror device.

Parameter

None

Input data

Input data	Description	Addr.	Data type	Value range	Init value	Unit
Position in the swivel range	Relative position of the bar code in the swivel range. The position is normalized to the zero position (middle position). Specified in 1/10 degrees.	0 … 1	SIGNED16	-200 … +200	0	1/10°

Table 10.31: Input data for module 41

Input data length

2 bytes

Output data

None

Notice!

The module is then only active if an oscillating-mirror scanner is used.

10.9 Data Processing

10.9.1 Module 50 – Characteristics filter

Description

Configuration of the characteristics filter.
This filter can be used to set how bar codes with identical content are handled and what criteria are to be taken into account in determining the likeness.

Parameter

Parameter	Description	Addr.	Data type	Value range	Default	Unit
Handling of identical bar code information	Determines how bar codes with the same content are to be managed.	0	UNSIGNED8	0: All bar codes are stored and output. 1: Only non-identical bar code contents are output. 2: Two identical bar codes arranged in T-shape are treated as a single bar code.	1	-
Comparison parameter - code type	If this criterion has been activated, the bar code type is used to determine whether the bar codes are identical.	1.0	Bit	0: deactivated 1: activated	1	-
Comparison parameter - bar code content	If this criterion has been activated, the bar code content is used to determine whether the bar codes are identical.	1.1	Bit	0: deactivated 1: activated	1	-
Comparison parameter - bar code direction	If this criterion has been activated, the bar code direction is used to determine whether the bar codes are identical.	1.2	Bit	0: deactivated 1: activated	1	-
Comparison parameter - scan position	If this parameter is not equal to 0, the bar code position in the scanning beam is used to determine whether identical bar codes have already been decoded. In this case, a +/- bandwidth in degrees must be specified, within which the same bar code is permitted to be in the scanning beam.	2 … 3	UNSIGNED16	0 … 450	0	1/10 degree

Table 10.32: Parameters for module 50

Parameter	Description	Addr.	Data type	Value range	Default	Unit
Comparison parameter - oscillating mirror position	If this parameter is not equal to 0, the bar code position in the swivel range of the oscillating mirror is used to determine whether identical bar codes have already been decoded. A +/- bandwidth in degrees must then be specified, within which the same bar code is permitted to be in the oscillating mirror swivel range.	4 … 5	UNSIGNED16	0 … 200	0	1/10 degree
Comparison parameter - scanning time info	If this parameter is not equal to 0, the decoding time (time at which the bar code was decoded) is used to determine whether identical bar codes have already been detected. Here, a difference time specified in milliseconds ensures that identical bar codes may only occur within this time.	6 … 7	UNSIGNED16	0 … 65535	0	ms

Table 10.32: Parameters for module 50

Parameter length

8 byte

Input data

None

Output data

None

All comparison criteria are AND linked; this means all active comparisons must be fulfilled before the just-decoded bar code can be identified as already decoded and then deleted.

10.9.2 Module 51 – Data filtering

Description

Configuration of the data filter.

Parameter

Parameter	Description	Addr.	Data type	Value range	Default	Unit
Bar code filter string 1	Filter expression 1	0	STRING 30 characters null terminated	1 … 30 bytes of ASCII characters	\00	-
Bar code filter string 2	Filter expression 2	30	STRING 30 characters null terminated	1 … 30 bytes of ASCII characters	\00	-

Table 10.33: Parameters for module 51

Parameter length

60 byte

Input data

None

Output data

None

Filter string

The filter string is used to define passthrough filters for bar codes.

An arbitrary number of '?' are permitted as placeholders for an arbitrary character at exactly this position. Also permitted are '*' as placeholders for a character sequence of arbitrary length, and an 'x' if the character at the respective position is to be deleted.

10.10 Identifier

The following modules can be used to specify the segmentation process to be used when extracting identifiers from the bar code data.

When a module is configured, the associated segmentation process is activated. If none of the modules is configured, no segmentation takes place.

Therefore, the modules can only be used one at a time and not simultaneously.

Notice!

When using one of the following modules, multiple results may occur within a reading gate. If there are multiple results, acknowledge mode must be used (cf. "Module 10 – Activations" on page 105, "Mode" parameter and the additional notices); data may otherwise be lost!

10.10.1 Module 52 – Segmentation according to the EAN process

Description

The module activates the segmentation according to the EAN process. The parameters specify the identifiers to searched for and the output mode.

Parameter

Parameter	Description	Addr.	Data type	Value range	Default	Unit
Identifier list						
Identifier 1	The identifier string is used for the identifier list and the filtering according to the segmentation.	0	STRING 5 characters null terminated	1 … 5 bytes of ASCII characters	'*'	-
Identifier 2	See identifier 1.	5	STRING 5 characters null terminated	1 … 5 bytes of ASCII characters	\0	-
Identifier 3	See identifier 1.	10	STRING 5 characters null terminated	1 … 5 bytes of ASCII characters	\0	-
Identifier 4	See identifier 1.	15	STRING 5 characters null terminated	1 … 5 bytes of ASCII characters	\0	-
Identifier 5	See identifier 1.	20	STRING 5 characters null terminated	1 … 5 bytes of ASCII characters	\0	-
Identifier output						
Output with identifier	If this switch is not set, the output of the identifiers is suppressed. Only the data values that belong to the identifiers are displayed in this case.	25.0	Bit	0: Output of the identifiers is suppressed. 1: Identifiers are output.	1	-
Output delimiter	This delimiter, if not equal to 0, is inserted between the identifier and the associated data value in the output.	26	UNSIGNED8	0 … 127	0	-

Table 10.34: Parameters for module 52

Parameter length

27 byte

Input data

None

Output data

None

Identifier string n (n = 1 … 5)

The identifier string defines both the identifier list for the segmentation and the passthrough filter for the subsequent filtering.

The string may contain wildcards. That is, an arbitrary number of '?' are permitted as placeholders for an arbitrary character at exactly that position.

Also permitted are '*' as placeholders for a character sequence of arbitrary length, and an 'x' if the character at the respective position is to be deleted. There are a total of 5 identifier strings.

An identifier with less than 5 characters must be null terminated. However, if the identifier string consists of exactly 5 characters, it does not have to be null terminated.

10.10.2 Module 53 – Segmentation via fixed positions

Description

The module activates the segmentation via fixed positions. The parameters specify the identifiers to be searched for, the output mode, and the positions.

Parameter

Parameter	Description	Addr.	Data type	Value range	Default	Unit
Identifier list						
Identifier 1	The identifier string is used for the identifier list and the filtering according to the segmentation.	0	STRING 5 characters null terminated	1 … 5 bytes of ASCII characters	'*'	-
Identifier 2	See identifier 1.	5	STRING 5 characters null terminated	1 … 5 bytes of ASCII characters	\0	-
Identifier 3	See identifier 1.	10	STRING 5 characters null terminated	1 … 5 bytes of ASCII characters	\0	-
Identifier 4	See identifier 1.	15	STRING 5 characters null terminated	1 … 5 bytes of ASCII characters	\0	-
Identifier 5	See identifier 1.	20	STRING 5 characters null terminated	1 … 5 bytes of ASCII characters	\0	-
Identifier output						

Table 10.35: Parameters for module 53

Parameter	Description	Addr.	Data type	Value range	Default	Unit
Output with identifier	If this switch is not set, the output of the identifiers is suppressed. Only the data values that belong to the identifiers are displayed in this case.	25.0	Bit	0: Output of the identifiers is suppressed. 1: Identifiers are output.	1	-
Output delimiter	This delimiter, if not equal to 0, is inserted between the identifier and the associated data value in the output.	26	UNSIGNED8	0 … 127	0	-
Fixed positions						
Start position of the 1st identifier	Specifies the position of the first character of the first identifier in the data string of the bar code. The first character in the bar code has position 1. If the parameter is = 0, it is deactivated.	27	UNSIGNED8	0 … 127	0	-
Start position of the 1st data value	Specifies the position of the first character of the first data value in the data string of the bar code. The first character in the bar code has position 1. If the parameter is = 0, it is deactivated.	28	UNSIGNED8	0 … 127	0	-
Start position of the 2nd identifier	Specifies the position of the first character of the second identifier in the data string of the bar code. The first character in the bar code has position 1. If the parameter is = 0, it is deactivated.	29	UNSIGNED8	0 … 127	0	-
Start position of the 2nd data value	Specifies the position of the first character of the second data value in the data string of the bar code. The first character in the bar code has position 1. If the parameter is = 0, it is deactivated.	30	UNSIGNED8	0 … 127	0	-
Start position of the 3rd identifier	Specifies the position of the first character of the third identifier in the data string of the bar code. The first character in the bar code has position 1. If the parameter is = 0, it is deactivated.	31	UNSIGNED8	0 … 127	0	-
Start position of the 3rd data value	Specifies the position of the first character of the third data value in the data string of the bar code. The first character in the bar code has position 1. If the parameter is = 0, it is deactivated.	32	UNSIGNED8	0 … 127	0	-

Table 10.35: Parameters for module 53

Parameter	Description	Addr.	Data type	Value range	Default	Unit
Start position of the 4th identifier	Specifies the position of the first character of the fourth identifier in the data string of the bar code. The first character in the bar code has position 1. If the parameter is = 0, it is deactivated.	33	UNSIGNED8	0 … 127	0	-
Start position of the 4th data value	Specifies the position of the first character of the fourth data value in the data string of the bar code. The first character in the bar code has position 1. If the parameter is = 0, it is deactivated.	34	UNSIGNED8	0 … 127	0	-
Start position of the 5th identifier	Specifies the position of the first character of the fifth identifier in the data string of the bar code. The first character in the bar code has position 1. If the parameter is = 0, it is deactivated.	35	UNSIGNED8	0 … 127	0	-
Start position of the 5th data value	Specifies the position of the first character of the fifth data value in the data string of the bar code. The first character in the bar code has position 1. If the parameter is = 0, it is deactivated.	36	UNSIGNED8	0 … 127	0	-

Table 10.35: Parameters for module 53

Parameter length

37 byte

Input data

None

Output data

None

Identifier string n (n = 1 … 5)

The identifier string defines both the identifier list for the segmentation and the passthrough filter for the subsequent filtering.

The string may contain wildcards. That is, an arbitrary number of '?' are permitted as placeholders for an arbitrary character at exactly that position.

Also permitted are '*' as placeholders for a character sequence of arbitrary length, and an 'x' if the character at the respective position is to be deleted. There are a total of 5 identifier strings.

An identifier with less than 5 characters must be null terminated. However, if the identifier string consists of exactly 5 characters, it does not have to be null terminated.

10.10.3 Module 54 – Segmentation according to identifier and separator

Description

This module activates the segmentation according to identifier and separator. The parameters specify the identifiers to be searched for, the output mode, and the parameters for the identifier/separator algorithm.

Parameter

Parameter	Description	Addr.	Data type	Value range	Default	Unit
Identifier list						
Identifier 1	The identifier string is used for the identifier list and the filtering according to the segmentation.	0	STRING 5 characters null terminated	1 … 5 bytes of ASCII characters	'*'	-
Identifier 2	See identifier 1.	5	STRING 5 characters null terminated	1 … 5 bytes of ASCII characters	\0	-
Identifier 3	See identifier 1.	10	STRING 5 characters null terminated	1 … 5 bytes of ASCII characters	\0	-
Identifier 4	See identifier 1.	15	STRING 5 characters null terminated	1 … 5 bytes of ASCII characters	\0	-
Identifier 5	See identifier 1.	20	STRING 5 characters null terminated	1 … 5 bytes of ASCII characters	\0	-
Identifier output						
Output with identifier	If this switch is not set, the output of the identifiers is suppressed. Only the data values that belong to the identifiers are displayed in this case.	25.0	Bit	0: Output of the identifiers is suppressed. 1: Identifiers are output.	1	-
Output delimiter	This delimiter, if not equal to 0, is inserted between the identifier and the associated data value in the output.	26	UNSIGNED8	0 … 127	0	-
Segmentation acc. to identifier and separator						
Identifier length	Fixed length of all identifiers in the segmentation process. After this length, the text of the identifier ends and the associated data value starts. The end of the data value is determined by the separator.	27	UNSIGNED8	0 … 255	0	-
Delimiter in the identifier/separator algorithm	The separator terminates the data value that follows its identifier directly after the identifier length. After the separator, the next identifier starts.	28	UNSIGNED8	0 … 127	0	-

Table 10.36: Parameters for module 54

Parameter length

29 byte

Input data

None

Output data

None

Identifier string n (n = 1 … 5)

The identifier string defines both the identifier list for the segmentation and the passthrough filter for the subsequent filtering.

The string may contain wildcards. That is, an arbitrary number of '?' are permitted as placeholders for an arbitrary character at exactly that position.

Also permitted are '*' as placeholders for a character sequence of arbitrary length, and an 'x' if the character at the respective position is to be deleted. There are a total of 5 identifier strings.

An identifier with less than 5 characters must be null terminated. However, if the identifier string consists of exactly 5 characters, it does not have to be null terminated.

10.10.4 Module 55 – String handling parameters

Description

This module is used to configure placeholder characters for the bar code segmentation, filtering, termination, and reference code processing.

Parameter

Parameter	Description	Addr.	Data type	Value range	Default	Unit
Wildcard character	This parameter is similar to the "don't care character" parameter. The difference between this and the "don't care character" is that all subsequent characters, and not only one character at a certain position, are disregarded until a character pattern is found in the string that follows the wildcard character pattern. This character has the same behavior as the wildcard character for the DIR command in the command line interpreter under Windows.	0	UNSIGNED8	32 … 127	'*'	-
Don't care character	Placeholder character. Characters at the position of the placeholder character are ignored in a comparison. This permits certain areas to be masked.	1	UNSIGNED8	32 … 127	?	-
Delete character	Delete character for bar code and identifier filtering (characters at the position of the delete character are deleted in a comparison. This permits certain areas to be deleted).	2	UNSIGNED8	32 … 127	'x'	-

Table 10.37: Parameters for module 55

Parameter length

3 byte

Input data

None

Output data

None

10.11 Device Functions

10.11.1 Module 60 – Device status

Description

The module contains the display of the device status as well as control bits for triggering a reset or putting the device into standby mode.

Parameter

None

Input data

Input data	Description	Addr.	Data type	Value range	Init value	Unit
Device status	This byte represents the device status	0	UNSIGNED8	1: Initialisation 10: Standby 11: Service 12: Diagnosis 13: Parameter enabled 15: Device is ready 0x80:Error 0x81:Warning	0	-

Table 10.38: Input data for module 60

Input data length

1 byte

Output data

Output data	Description	Addr.	Data type	Value range	Init value	Unit
System reset	The control bit triggers a system reset[1)] if the level changes from 0 to 1	0.6	Bit	0: Run 0 -> 1: Reset	0	-
Standby	Activates the standby function	0.7	Bit	0: Standby off 1: Standby on	0	-

Table 10.39: Output data for module 60

1) Analogous to command H, activation of this bit triggers a restart of all electronics, incl. a restart of the PROFIBUS stack.

Output data length

1 byte

Notice!

When resetting the data (see Module 10 – Activations), the input data of this module is not deleted.

10.11.2 Module 61 – Laser control

Description

This module defines the switch-on and switch-off position of the laser.

Parameter

Parameter	Description	Addr.	Data type	Value range	Default	Unit
Laser start position	This parameter defines the switch-on position of the laser in 1/10° increments within the visible range of the laser. The centre of the reading field corresponds to the 0° position.	0 … 1	UNSIGNED16	-450 … +450	-450	1/10°
Laser stop position	This parameter defines the switch-off position of the laser in 1/10° increments within the visible range of the laser.	2 … 3	UNSIGNED16	-450 … +450	+450	1/10°

Table 10.40: Parameters for module 61

Parameter length

4 byte

Input data

None

Output data

None

10.11.3 Module 63 – Alignment

Description

The module defines input and output data for the alignment mode of the BCL 304*i*. The alignment mode is used for easy alignment of the BCL 304*i* with the bar code. Using the transmitted decoding quality as a percentage, the optimum alignment can be easily selected. This module should not be used in connection with module 81 (AutoReflAct) as this may cause malfunctions.

Parameter

None

Input data

Input data	Description	Addr.	Data type	Value range	Init value	Unit
Decoding quality	Transmits the current decoding quality of the bar code located in the scanning beam	0	Byte	0 … 100	0	Percent-age

Table 10.41: Input data for module 63

Input data length

1 byte

Output data

Output data	Description	Addr.	Data type	Value range	Init value	Unit
Alignment mode	Signal activates and deactivates the alignment mode for optimum alignment of the BCL 304*i* with the bar code	0.0	Bit	0 -> 1: On 1 -> 0: Off	0	-

Table 10.42: Output data for module 63

Output data length

1 byte

10.11.4 Module 64 – Oscillating mirror

Description

Module for supporting the oscillating mirror.

Parameter

Parameter	Description	Addr.	Data type	Value range	Default	Unit
Oscillation mode	This parameter defines the mode in which the oscillating mirror operates.	0	UNSIGNED8	0: Single oscillation 1: Double oscillation 2: Continuous oscillation 3: Continuous oscillation, oscillating mirror moves to the start position at the end of the reading gate.	2	-
Start position	Start position (opening angle) relative to the zero position of the swivel range.	1 … 2	SIGNED16	-200 … +200	200	1/10°
Stop position	Stop position (opening angle) relative to the zero position of the swivel range.	3 … 4	SIGNED16	-200 … +200	-200	1/10°
Oscillation frequency	Common value for forward and backward motion	5	UNSIGNED8	15 … 116	48	°/s

Table 10.43: Parameters for module 64

Parameter length

6 byte

Input data

None

Output data

None

Notice!

The module is then only active if an oscillating-mirror scanner is used.

10.12 SWIO 1 and SWIO 2 switching inputs / outputs

These modules define the mode of operation of the 2 digital switching inputs and outputs (I/Os). They are separated into individual modules for configuring the individual I/Os and a shared module for signalling the status and controlling.

10.12.1 Parameters for operating as an output

Start-up delay

With this setting, the output pulse can be delayed by the specified time (in ms).

Switch-on time

Defines the switch-on time period for the switching input. Any activated switch-off function then no longer has any function.

A value of 0 causes the output to be set statically; this means that the selected input function(s) activate the output, and the selected switch-off function(s) deactivate it again.

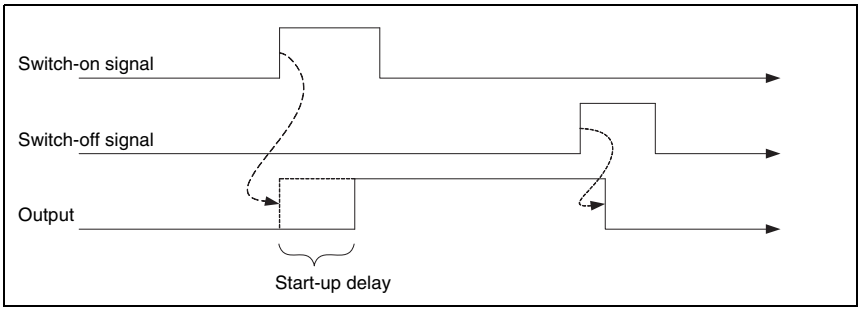

Figure 10.4: Example 1: Start-up delay > 0 and switch-on time = 0

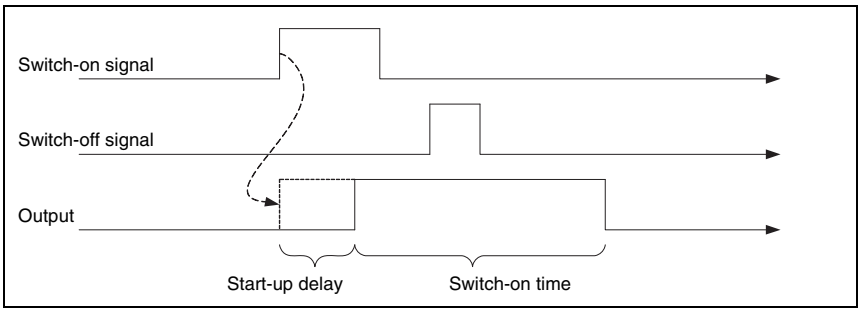

Figure 10.5: Example 2: Start-up delay > 0 and switch-on time > 0

In example 2, the activation duration of the output is only dependent on the selected switch-on time; the switch-off signal has no effect.

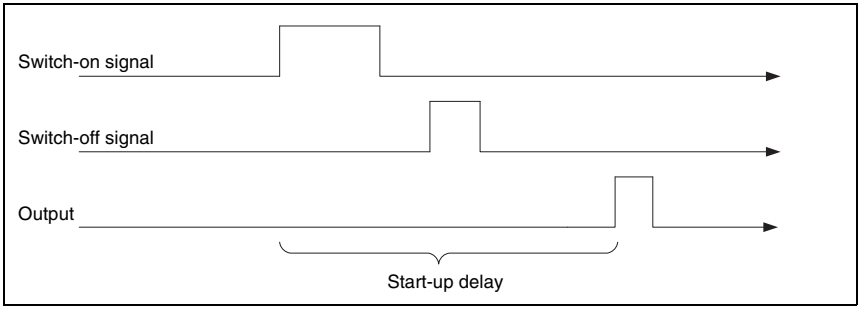

Figure 10.6: Example 3: start-up delay > 0 switch-off signal prior to lapsing of the start-up delay

If the output is again deactivated via the switch-off signal before the start-up delay lapses, only a brief pulse appears at the output following the start-up delay.

Comparison functionality

If, for example, the switching output is to be activated after four invalid read results, the **comparative value** is set to **4** and the **switch-on function** is configured to "**invalid read result**".

The **comparison mode** parameter can be used to define whether the switching output is activated only once in the case that the event counter and comparative value fulfil the "**parity**" condition, or if it is activated multiple times, on each successive event after the "**parity**" condition is met.

The event counter can always be reset with the I/O data in the **I/O status and control** module; furthermore, the **reset mode** parameter enables automatic resetting upon reaching the **comparative value**. Automatic resetting upon reaching the **comparative value** always results in the switching output being switched once independent of the **comparison mode** parameter.

The standard switch-off function at **reading gate start** is rather unsuited for this module since it causes the event counter to be reset on each reading gate start. Suitable as switch-off function for this example is the **valid read result** function; otherwise, all switch-off functions are deactivated.

10.12.2 Parameters for operating as an input

Debounce time

Parameter for setting the software debounce time for the switching input. The definition of a debounce time extends the signal transition time accordingly.

If the value of this parameter = 0, no debouncing takes place; otherwise, the configured value represents the duration in milliseconds for which the input signal must be present and stable.

Start-up delay td_on

If the value of this parameter = 0, no start-up delay occurs for the activation of the input function; otherwise, the configured value represents the time in milliseconds by which the input signal is delayed.

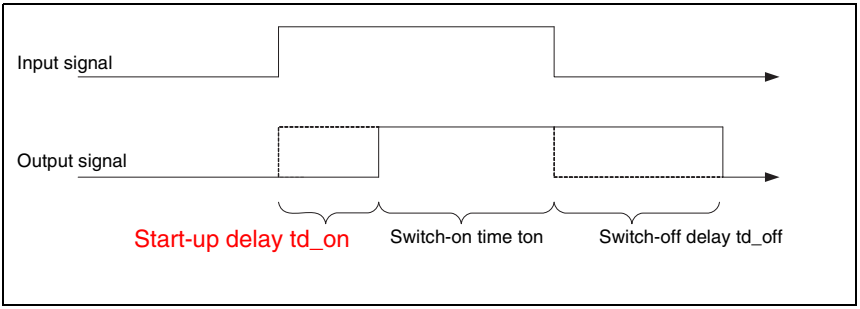

Figure 10.7: Start-up delay in input mode

Switch-on time ton

This parameter specifies the min. activation duration for the selected input function in ms.

The actual activation duration is calculated from the switch-on time as well as the switch-off delay.

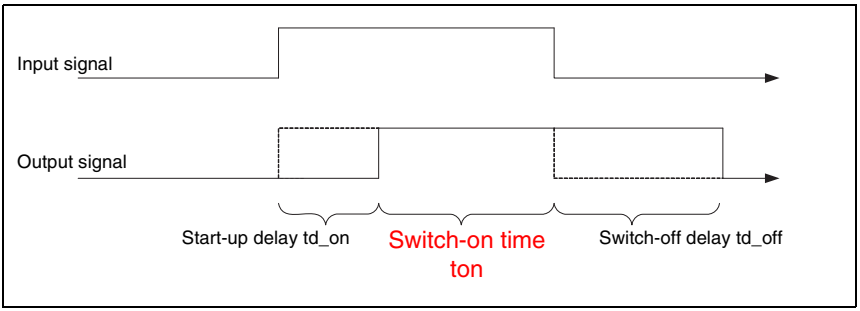

Figure 10.8: Switch-on time in input mode

Switch-off delay td_off

This parameter specifies the duration of the switch-off delay in ms.

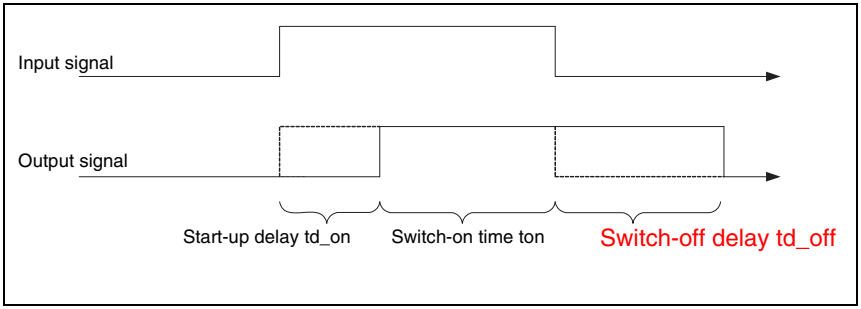

Figure 10.9: Switch-off delay in input mode

10.12.3 Switch-on and switch-off functions for operation as an output

The following options are available for switch-on and switch-off functions in the "output" operating mode:

Name	Value	Comments
No function	0	No functionality
Reading gate start	1	
Reading gate end	2	
Positive reference code comparison 1	3	
Negative reference code comparison 1	4	
Valid read result	5	
Invalid read result	6	
Device ready	7	The device is in a ready state
Device not ready	8	The device is not yet ready (motor and laser are being activated)
Data transmission active	9	
Data transmission not active	10	
AutoControl good quality	13	
AutoControl bad quality	14	
Reflector detected	15	
Reflector not detected	16	
External event, pos. edge	17	In the PROFIBUS case, the external event is generated with the aid of module 74 – "I/O status and control". See "Module 74 – SWIO status and control" on page 145.
External event, neg. edge	18	See above
Device active	19	Decoding is currently being performed.
Device in standby mode	20	Motor and laser inactive
No device error	21	No error was detected
Device error	22	Device is in an error state
Positive reference code comparison 2	23	
Negative reference code comparison 2	24	

Table 10.44: Switch-on/switch-off functions

10.12.4 Input functions for operation as an input

Name	Value	Comments
No function	0	No functionality
Activation of the reading gate	1	
Reading gate deactivation only	2	
Reading gate activation only	3	
Reference bar code teach-in	4	
Start/stop autoconfiguration mode	5	

Table 10.45: Input functions

10.12.5 Module 70 – Switching input/output SWIO1

Parameter

Parameter	Description	Addr.	Data type	Value range	Default	Unit
Function	This parameter defines whether I/O 1 functions as an input or as an output.	0.0	Bit	0: Input 1: Output	0	-
Mode of operation for configuration as an output						
DC bias level	The parameter defines the DC bias level of the switching output and, thus, simultaneously whether the output is low-active (0) or high-active (1).	0.1	Bit	0: LOW (0V) 1: HIGH (+Ub)	0	-
Reserved	Free	0.2 … 0.7				
Start-up delay	With this parameter, the output pulse may be delayed by a set time period.	1	UNSIGNED16	0 … 65535	0	ms
Switch-on time	The parameter defines the switch-on time period for the switching output. If the value is 0, the signal is static.	3	UNSIGNED16	0 … 1300	400	ms
Switch-on function 1	This parameter specifies an event which can set the switching output.	5	UNSIGNED8	cf. "Switch-on/ switch-off functions" on page 140	0	-
Switch-on function 2	This parameter specifies an event which can set the switching output. Switch-on function 1 and switch-on function 2 are OR linked.	6	UNSIGNED8	cf. "Switch-on/ switch-off functions" on page 140	0	-
Switch-off function 1	This parameter specifies an event which can reset the switching output.	7	UNSIGNED8	cf. "Switch-on/ switch-off functions" on page 140	0	-
Switch-off function 2	This parameter specifies an event which can reset the switching output. Switch-off function 1 and switch-off function 2 are OR linked.	8	UNSIGNED8	cf. "Switch-on/ switch-off functions" on page 140	0	-

Table 10.46: Parameters for module 70 – Input/Output 1

Parameter	Description	Addr.	Data type	Value range	Default	Unit
Comparative value (Event Counter)	If the number of activation events of the selected switch-on function reaches this comparative value, the switching output is activated. A deactivation event of the selected switch-off function resets the counter.	9	UNSIGNED16	0..65535	0	-
Compare mode (Event Counter)	Specifies whether the switching output switches only on parity (once) or also in the event of greater or equal to (multiple times) after the comparative value is reached.	11	UNSIGNED8	0: SWOUT switches once 1: SWOUT switches several times	0	-
Reset mode (Event Counter)	Specifies whether the counter (Event Counter) is reset only by the reset bit and the selected switch-off function, or if the counter should be automatically reset after the comparative value is reached.	12	UNSIGNED8	0: Reset bit and switch-off funct. 1: Comparative value reached	0	-
Mode of operation for configuration as an input						
Inversion	The parameter defines the logic of the incident signal. In case of an inversion, an external HIGH level is interpreted internally as a LOW level.	13.1	Bit	0: Normal 1: Inverted	0	-
Reserved	Free	13.2 … 13.7				
Debounce time	The parameter defines a debounce time which is implemented in software.	14	UNSIGNED16	0 … 1000	5	ms
Start-up delay	The parameter influences the timing during switch-on.	16	UNSIGNED16	0 … 65535	0	ms
Minimum switch-on time	The parameter defines a minimum time period before the signal is reset.	18	UNSIGNED16	0 … 65535	0	ms
Switch-off delay	The parameter defines a time delay for the signal during switch-off.	20	UNSIGNED16	0 … 65535	0	ms
Input function	The parameter specifies the function which is to be activated or deactivated by a change of state in the signal.	22	UNSIGNED8	cf. "Input functions" on page 141	1	-

Table 10.46: Parameters for module 70 – Input/Output 1

Parameter length

23 byte

Input data

None

Output data

None

Remark

The DC bias level also defines whether the output is low-active (**0**) or high-active (**1**).

Switching on an I/O configured as an output means switching to the active state; switching off, on the other hand, results in switching to the inactive or idle state.

10.12.6 Module 71 – Switching input/output SWIO2

Parameter

Parameter	Description	Addr.	Data type	Value range	Default	Unit
Function	This parameter defines whether I/O 2 functions as an input or as an output.	0.0	Bit	0: Input 1: Output	1	-
Mode of operation for configuration as an output						
DC bias level	The parameter defines the DC bias level of the switching output and, thus, simultaneously whether the output is low-active (0) or high-active (1).	0.1	Bit	0: LOW (0V) 1: HIGH (+Ub)	0	-
Reserved	Free	0.2 … 0.7				
Start-up delay	With this parameter, the output pulse may be delayed by a set time period.	1	UNSIGNED16	0 … 65535	0	ms
Switch-on time	The parameter defines the switch-on time period for the switching output. If the value is 0, the signal is static.	3	UNSIGNED16	0 … 1300	400	ms
Switch-on function 1	This parameter specifies an event which can set the switching output.	5	UNSIGNED8	cf. "Switch-on/ switch-off functions" on page 140	5	-
Switch-on function 2	This parameter specifies an event which can set the switching output. Switch-on function 1 and switch-on function 2 are OR linked.	6	UNSIGNED8	cf. "Switch-on/ switch-off functions" on page 140	0	-
Switch-off function 1	This parameter specifies an event which can reset the switching output.	7	UNSIGNED8	cf. "Switch-on/ switch-off functions" on page 140	1	-
Switch-off function 2	This parameter specifies an event which can reset the switching output. Switch-off function 1 and switch-off function 2 are OR linked.	8	UNSIGNED8	cf. "Switch-on/ switch-off functions" on page 140	0	-
Comparative value (Event Counter)	If the number of activation events of the selected switch-on function reaches this comparative value, the switching output is activated. A deactivation event of the selected switch-off function resets the counter.	9	UNSIGNED16	0..65535	0	-

Table 10.47: Parameters for module 71 – Input/Output 2

Parameter	Description	Addr.	Data type	Value range	Default	Unit
Compare mode (Event Counter)	Specifies whether the switching output switches only on parity (once) or also in the event of greater or equal to (multiple times) after the comparative value is reached.	11	UNSIGNED8	0: SWOUT switches once 1: SWOUT switches several times	0	-
Reset mode (Event Counter)	Specifies whether the counter (Event Counter) is reset only by the reset bit and the selected switch-off function, or if the counter should be automatically reset after the comparative value is reached.	12	UNSIGNED8	0: Reset bit and switch-off funct. 1: Comparative value reached	0	-
Mode of operation for configuration as an input						
Inversion	The parameter defines the logic of the incident signal. In case of an inversion, an external HIGH level is interpreted internally as a LOW level.	13.1	Bit	0: Normal 1: Inverted	0	-
Reserved	Free	13.2 … 13.7				
Debounce time	The parameter defines a debounce time which is implemented in software.	14	UNSIGNED16	0 … 1000	5	ms
Start-up delay	The parameter influences the timing during switch-on.	16	UNSIGNED16	0 … 65535	0	ms
Minimum switch-on time	The parameter defines a minimum time period before the signal is reset.	18	UNSIGNED16	0 … 65535	0	ms
Switch-off delay	The parameter defines a time delay for the signal during switch-off.	20	UNSIGNED16	0 … 65535	0	ms
Input function	The parameter specifies the function which is to be activated or deactivated by a change of state in the signal.	22	UNSIGNED8	cf. "Input functions" on page 141	0	-

Table 10.47: Parameters for module 71 – Input/Output 2

Parameter length

23 byte

Input data

None

Output data

None

Remark

The DC bias level also defines whether the output is low-active (**0**) or high-active (**1**).

Switching on an I/O configured as an output means switching to the active state; switching off, on the other hand, results in switching to the inactive or idle state.

10.12.7 Module 74 – SWIO status and control

Description

Module for handling switching input and switching output signals.

Parameter

None

Input data

Input data	Description	Addr.	Data type	Value range	Init value	Unit
State 1	Signal state of switching input or output 1	0.0	Bit	0,1	0	-
State 2	Signal state of switching input or output 2	0.1	Bit	0,1	0	-
Comparison state switching output 1 (Event Counter)	Indicates whether the event counter has exceeded the set comparative value. The bit is reset to the init. value by resetting the event counter.	1.0	Bit	0: Not exceeded 1: Exceeded	0	-
Switching output 1 Comparison state toggle bit (Event Counter)	If "SWOUT switches several times" was configured as comparison mode, this bit is toggled each time the event counter is exceeded. The bit is reset to the init. value by resetting the event counter.	1.1	Bit	0 → 1: Event counter exceeded 1 → 0: Event counter exceeded again	0	-
Comparison state switching output 2 (Event Counter)	Indicates whether the event counter has exceeded the set comparative value. The bit is reset to the init. value by resetting the event counter.	1.2	Bit	0: Not exceeded 1: Exceeded	0	-
Switching output 2 Comparison state toggle bit (Event Counter)	If "SWOUT switches several times" was configured as comparison mode, this bit is toggled each time the event counter is exceeded. The bit is reset to the init. value by resetting the event counter.	1.3	Bit	0 → 1: Event counter exceeded 1 → 0: Event counter exceeded again	0	-

Table 10.48: Input data for module 74 Input/output status and control

Input data length

2 bytes

Output data

Output data	Description	Addr.	Data type	Value range	Init value	Unit
Switching output 1	Sets the state of switching output 1	0.0	Bit	0: Switching output 0 1: Switching output 1	0	-
Switching output 2	Sets the state of switching output 2	0.1	Bit	0: Switching output 0 1: Switching output 1	0	-
Reset Event Counter Switching output 1	Sets the event counter of the activation function [AF] for switching output 1 back to zero.	0.4	Bit	0 -> 1: Perform reset 1 -> 0: No function	0	-
Reset Event Counter Switching output 2	Sets the event counter of the activation function [AF] for switching output 2 back to zero.	0.5	Bit	0 -> 1: Perform reset 1 -> 0: No function	0	-
	Reserved	1	Byte			

Table 10.49: Output data for module 74 Input/output status and control

Output data length

2 bytes

10.13 Data output

10.13.1 Module 80 – Sorting

Description

Module to support the sorting of the output data.

Parameter

Parameter	Description	Addr.	Data type	Value range	Default	Unit
Sort criterion 1	Specifies the criterion according to which sorting takes place.	0.0 … 0.6	BitArea	0: No sorting 1: Sorting according to scan number 2: Sorting according to position in the scanning beam 3: Sorting according to the oscillating mirror position 4: Sorting according to the decoding quality 5: Sorting according to the bar code length 6: Sorting according to the code type number 7: Sorting according to the decoding direction 8: Sorting according to the bar code content 9: Sorting according to time 10: Sorting according to scanning duration 11: Sorting according to the code list (in which the enabled bar codes are listed) 12: Sorting according to the identifier list	0	-
Sort direction 1	Specifies the sorting direction.	0.7	Bit	0: In ascending order 1: In descending order	0	-
Sort criterion 2	Specifies the criterion according to which sorting takes place.	1.0 … 1.6	BitArea	See sorting criterion 1	0	-
Sort direction 2	Specifies the sorting direction.	1.7	Bit	See sorting direction 1	0	-
Sort criterion 3	Specifies the criterion according to which sorting takes place.	2.0 … 2.6	BitArea	See sorting criterion 1	0	-
Sort direction 3	Specifies the sorting direction.	2.7	Bit	See sorting direction 1	0	-

Table 10.50: Parameters for module 80

Parameter length

3 byte

Input data

None

Output data

None

10.14 Reference code comparison

The following modules can be used to support reference code comparison.

The reference code function compares the currently decoded read results with one or more stored comparison patterns. The function is split into two comparison units which can be configured independently of each other.

10.14.1 Module 81 – Reference code comparator 1

Description

The module defines the mode of operation of reference code comparator 1.

Parameter

Parameter	Description	Addr.	Data type	Value range	Default	Unit
Output function after reference bar code comparison	This parameter specifies the associated output linkage after a reference bar code comparison.	0	UNSIGNED8	0: No function 1: Comparison function 1 2: Comparison function 2 3: Comparison function 1 AND 2 4: Comparison function 1 OR 2	1	-
Linking logic for reference code output signal	This parameter specifies the linking logic for the reference code output signal.	1	UNSIGNED8	0: Length and type and ASCII 1: Length and (type or ASCII) 2: (Length or type) and ASCII 3: Length or type or ASCII	0	-
Output for reference code comparison	This parameter specifies whether a bar code length comparison should be carried out.	2	UNSIGNED8	0: Length ignored 1: Comparison o.k. if length not identical 2: Comparison o.k. if length identical.	2	-
Bar code type comparison	This parameter specifies whether a bar code type comparison should be carried out.	3	UNSIGNED8	0: Type ignored 1: Comparison o.k. if types not identical 2: Comparison o.k. if types identical.	2	-
Reference code ASCII comparison	This parameter specifies how the ASCII comparison should be carried out.	4	UNSIGNED8	0: No comparison 1: Bar code not identical to RC 2: Bar code identical to RC 3: Bar code greater than RC 4: Bar code greater than or equal to RC 5: Bar code less than RC 6: Bar code less than or equal to RC 7: RC1 less than or equal to bar code less than or equal to RC2 8: Bar code less than RC1 or bar code greater than RC2	2	-

Table 10.51: Parameters for module 81 – Reference code comparison

Parameter	Description	Addr.	Data type	Value range	Default	Unit
Reference code comparison mode	This parameter determines how and which reference bar codes (RC) are to be used for the bar code comparison.	5	UNSIGNED8	0: Only the first RC is used for the comparison. 1: Only the second RC is used for the comparison. 2: RC 1 and 2 are used for the comparison. Both conditions for RC 1 and 2 must be satisfied for a positive comparison. 3: RC 1 and 2 are used for the comparison. One of the two conditions for reference bar codes 1 and 2 must be satisfied.	0	-
Bar code comparison mode	This parameter specifies which decoded bar codes are to be used for the reference bar code comparison.	6	UNSIGNED8	0: Only the first bar code is used for the comparison. 1: Only the second bar code is used for the comparison. 2: All bar codes are used for the comparison. All comparisons must be successful. 3: All bar codes are used for the comparison. One comparison must be successful.	3	-
Reference code completeness comparison	If this parameter is set, the basic condition for a positive reference code comparison is that all mandatory bar codes that are to be read within a reading gate were actually read. If this condition is not satisfied, no positive reference code comparison is achieved.	7.0	Bit	0: Completeness comparison switched off. 1: Completeness comparison switched on.	0	-

Table 10.51: Parameters for module 81 – Reference code comparison

Arameter length

8 byte

Input data

None

Output data

None

10.14.2 Module 82 – Reference code comparator 2

Description

The module defines the mode of operation of reference code comparator 2.

Parameter

Parameter	Description	Addr.	Data type	Value range	Default	Unit
Output function after reference bar code comparison	This parameter specifies the associated output linkage after a reference bar code comparison.	0	UNSIGNED8	0: No function 1: Comparison function 1 2: Comparison function 2 3: Comparison function 1 AND 2 4: Comparison function 1 OR 2	1	-
Linking logic for reference code output signal	This parameter specifies the linking logic for the reference code output signal.	1	UNSIGNED8	0: Length and type and ASCII 1: Length and (type or ASCII) 2: (Length or type) and ASCII 3: Length or type or ASCII	0	-
Output for reference code comparison	This parameter specifies whether a bar code length comparison should be carried out.	2	UNSIGNED8	0: Length ignored 1: Comparison o.k. if length not identical 2: Comparison o.k. if length identical.	2	-
Bar code type comparison	This parameter specifies whether a bar code type comparison should be carried out.	3	UNSIGNED8	0: Type ignored 1: Comparison o.k. if types not identical 2: Comparison o.k. if types identical.	2	-
Reference code ASCII comparison	This parameter specifies how the ASCII comparison should be carried out.	4	UNSIGNED8	0: No comparison 1: Bar code not identical to RC 2: Bar code identical to RC 3: Bar code greater than RC 4: Bar code greater than or equal to RC 5: Bar code less than RC 6: Bar code less than or equal to RC 7: RC1 less than or equal to bar code less than or equal to RC2 8: Bar code less than RC1 or bar code greater than RC2	2	-

Table 10.52: Parameters for module 82 – Reference code comparison

Parameter	Description	Addr.	Data type	Value range	Default	Unit
Reference code comparison mode	This parameter determines how and which reference bar codes (RC) are to be used for the bar code comparison.	5	UNSIGNED8	0: Only the first RC is used for the comparison. 1: Only the second RC is used for the comparison. 2: RC 1 and 2 are used for the comparison. Both conditions for RC 1 and 2 must be satisfied for a positive comparison. 3: RC 1 and 2 are used for the comparison. One of the two conditions for reference bar codes 1 and 2 must be satisfied.	0	-
Bar code comparison mode	This parameter specifies which decoded bar codes are to be used for the reference bar code comparison.	6	UNSIGNED8	0: Only the first bar code is used for the comparison. 1: Only the second bar code is used for the comparison. 2: All bar codes are used for the comparison. All comparisons must be successful. 3: All bar codes are used for the comparison. One comparison must be successful.	3	-
Reference code completeness comparison	If this parameter is set, the basic condition for a positive reference code comparison is that all mandatory bar codes that are to be read within a reading gate were actually read. If this condition is not satisfied, no positive reference code comparison is achieved.	7.0	Bit	0: Completeness comparison switched off. 1: Completeness comparison switched on.	0	-

Table 10.52: Parameters for module 82 – Reference code comparison

Parameter length

8 byte

Input data

None

Output data

None

10.14.3 Module 83 – Reference code comparison pattern 1

Description

This module can be used to define the 1st comparison pattern

Parameter

Parameter	Description	Addr.	Data type	Value range	Default	Unit
Code type comparison pattern 1	Specifies the type of the reference bar code.	0	UNSIGNED8	0: 0: No code 1: 2/5 Interleaved 2: Code39 3: Code32 6: UPC, UPCE 7: EAN8, EAN13 8: Code128 10: EAN Addendum 11: Codabar 12: Code93 13: RSS-14 14: RSS Limited 15: RSS Expanded	0	-
Comparison pattern 1	Parameter string describing the content of the reference bar code. Note: You can also use the two placeholder characters that are stored in the "Wildcard character" and "Don't care character" parameters. If the string is empty, no comparison takes place. If the most recently stored character is the wildcard character, the comparison is only carried out up to the character before this wildcard character. In this way it is possible to switch off a comparison according to bar code length.	1	STRING 30 characters null terminated	1 … 30 bytes of ASCII characters	\00	-

Table 10.53: Parameter module 83 – Reference code comparison pattern

Parameter length

31 byte

Input data

None

Output data

None

Notice!

The defined comparison pattern affects both reference code comparators (Module 81 – Reference code comparator 1 and Module 82 – Reference code comparator 2).

10.14.4 Module 84 – Reference code comparison pattern 2

Description

This module can be used to define the 2nd comparison pattern

Parameter

Parameter	Description	Addr.	Data type	Value range	Default	Unit
Code type comparison pattern 2	Specifies the type of the reference bar code.	0	UNSIGNED8	0: 0: No code 1: 2/5 Interleaved 2: Code39 3: Code32 6: UPC, UPCE 7: EAN8, EAN13 8: Code128 10: EAN Addendum 11: Codabar 12: Code93 13: RSS-14 14: RSS Limited 15: RSS Expanded	0	-
Comparison pattern 2	Parameter string describing the content of the reference bar code. Note: You can also use the two placeholder characters that are stored in the "Wildcard character" and "Don't care character" parameters. If the string is empty, no comparison takes place. If the most recently stored character is the wildcard character, the comparison is only carried out up to the character before this wildcard character. In this way it is possible to switch off a comparison according to bar code length.	1	STRING 30 characters null terminated	1 … 30 bytes of ASCII characters	\00	-

Table 10.54: Parameter module 84 – Reference code comparison pattern

Parameter length

31 byte

Input data

None

Output data

None

Notice!

The defined comparison pattern affects both reference code comparators (Module 81 – Reference code comparator 1 and Module 82 – Reference code comparator 2).

10.15 Special Functions

10.15.1 Module 90 – Status and control

This module supplies various BCL 304*i* status information to the PROFIBUS master. Various functions of the BCL 304*i* can be controlled via the master's output data.

Parameter

None

Input data

Input data	Description	Addr.	Data type	Value range	Init value	Unit
Reserved	Free	0.0	Bit		0	-
AutoRefl state	Signal state of the AutoRefl module	0.1	Bit	0: Reflector is recognised 1: Reflector is hidden	1	-
Auto Control result	Indicates whether the result of the AutoControl function was a good or bad reading.	0.2	Bit	0: Quality good 1: Quality bad	0	-
Reserved	Free	0.3	Bit		0	-
RefCode comparison state 1	The signal indicates whether the decoded bar code corresponds to the reference code with regard to the comparison criteria as defined in the comparison function 1. If it matches, the value 1 is output.	0.4 … 0.5	Bit	0: Not equal 1: Equal 2: Unknown	2	-
RefCode comparison state 2	The signal indicates whether the decoded bar code corresponds to the reference code with regard to the comparison criteria as defined in the comparison function 2. If it matches, the value 1 is output.	0.6 … 0.7	Bit	0: Not equal 1: Equal 2: Unknown	2	-

Table 10.55: Input data for module 90 – Status and control

Input data length

1 byte

Output data

None

10.15.2 Module 91 – AutoReflAct (automatic reflector activation)

Description

The module defines the mode of operation of the laser scanner for controlling the reading gate.

The AutoReflAct function uses the scanning beam to simulate a photoelectric sensor and thus permits an activation without additional sensory mechanism. This is achieved by directing the scanner with reduced scanning beam towards a reflector mounted behind the conveyor path. As long as the scanner is targeted at the reflector, the reading gate remains closed. If, however, the reflector is blocked by an object such as a container with a bar code label, the scanner activates the read procedure, and the label on the container is read. When the path from the scanner to the reflector has cleared, the read procedure has completed and the scanning beam is reduced and again directed onto the reflector. The reading gate is closed.

Parameter

Parameter	Description	Addr.	Data type	Value range	Default	Unit
Mode	This parameter activates the function of the laser scanner. If "Autom. reading gate control" is set as the parameter value, the BCL activates the reading gate automatically if the reflector is obscured.	0	UNSIGNED8	0: **Normal** AutoreflAct switched off. 1: **Auto** AutoreflAct activated. Autom. reading gate control. 2: **Manual** AutoreflAct activated. No reading gate control, signalling only.	0	-
Debouncing	The parameter defines the debounce time in scans for the reflector detection With a motor speed of 1000, 1 scan corresponds to a debounce time of 1 ms.	1	UNSIGNED8	1 … 16	5	-

Table 10.56: Parameters for module 91 – AutoreflAct

Parameter length

2 bytes

Input data

None

Output data

None

10.15.3 Module 92 – AutoControl

Description

The module defines the mode of operation of the function AutoControl. The function monitors the quality of the decoded bar codes and compares these with a limit value. If the limit is reached, a status is set.

Parameter

Parameter	Description	Addr.	Data type	Value range	Default	Unit
AutoControl enable	This parameter can be used to activate or deactivate the AutoControl function.	0	UNSIGNED8	0: deactivated 1: activated	0	-
Limit for reading quality	The parameter defines a threshold for the reading quality.	1	UNSIGNED8	0 … 100	50	%
Sensitivity	With this parameter the sensitivity towards changes in the reading ability can be specified. The higher the value, the less influence a change of reading ability has.	2	UNSIGNED8	0 … 255	0	-

Table 10.57: Parameters for module 92 – AutoControl

Parameter length

3 byte

Input data

Input data	Description	Addr.	Data type	Value range	Init value	Unit
Scan quality	Represents the current average value of the scan quality (at the time of the last reading gate).	0	UNSIGNED8	0 … 100	0	-

Table 10.58: Input data for module 92 – AutoControl

Input data length

1 byte

Output data

None

Notice:

By means of the AutoControl function, it is possible to detect bar codes of decreasing quality and thus take appropriate measures before the label is no longer legible. With activated AutoControl function, note that the "Processing end at end of label" parameter in the CRT module should be set to allow for a better assessment of the bar code quality (see also "Module 7 – Code fragment technology" on page 104).

10.16 Example configuration: Indirect activation via the PLC

10.16.1 Task

- Reading of a 15-digit Code 128
- Indirect activation of the BCL 304*i* via the PLC

Code sample

Code 128, 15 digits

10.16.2 Procedure

Hardware, connections

The following connections must have been established:

- Voltage supply (PWR)
- PROFIBUS In
- PROFIBUS termination

Required modules

Include the following modules in your project:

- Module 10 – Activations
- Module 24 – Decoding result 16 bytes

Parameter settings

In the standard parameter set (device parameters), only code 128 with 0 … 63 digits must be activated.

Flow diagrams

Successful reading:

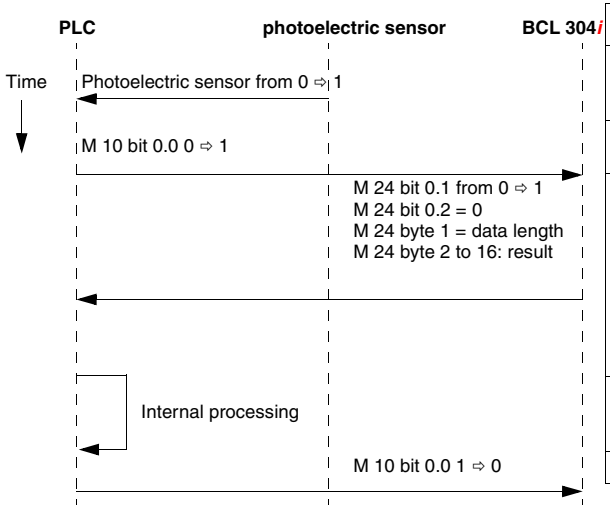

Description
The photoelectric sensor is interrupted.
Activation bit 0.0 is set to 1. This activates the reading gate.
The bar codes that have been read are processed and transmitted by module 24: Reading concluded bit 0.1 = 1 and bar code not decoded bit 0.2 = 0. The data length is entered in byte 1, in this case 15 decimal. The decoding result is transmitted in the following 15 bytes.
Internal data processing.
Activation bit 0.0 is reset to 0

Unsuccessful reading:

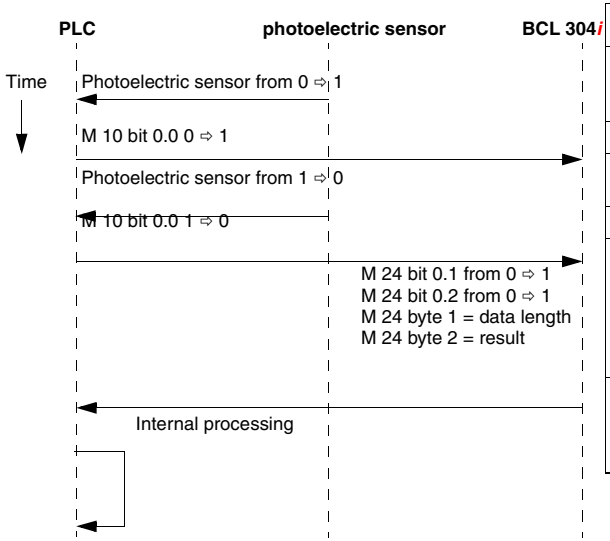

Description
The photoelectric sensor is interrupted.
Activation bit 0.0 is reset to 1.
The reading gate elapses without read result.
Activation bit 0.0 is reset to 0.
The module decoding state signals: Reading concluded bit 0.1 = 1 and bar code **not** decoded bit 0.2 = 1. The data length is entered in byte 1. The result hex 3F ("?" = no read) is transmitted.
Internal processing of the data and signaling of the non-reading.

10.17 Sample configuration: Direct activation via the switching input

10.17.1 Task

- Reading of a 12-digit bar code in 2/5 Interleaved format
- Direct activation of the BCL 304*i* via a photoelectric sensor

Code sample

Code 2/5 Interleaved 12 digits with check digit

561234765436

10.17.2 Procedure

Hardware, connections

The following connections must have been established:

- Voltage supply (PWR)
- PROFIBUS In
- PROFIBUS termination
- Photoelectric sensor at SWIO1

Required modules

Include the following modules in your project:

- Module 23 – Decoding result 12 bytes

Parameter settings of the "common parameters"

Byte	Description	Init value	Change value to:
1	Code type 1	0	01: 2/5 Interleaved
4	Digits 3	0	12

Table 10.59: Device parameters for example configuration 2

Flow diagrams

Successful reading:

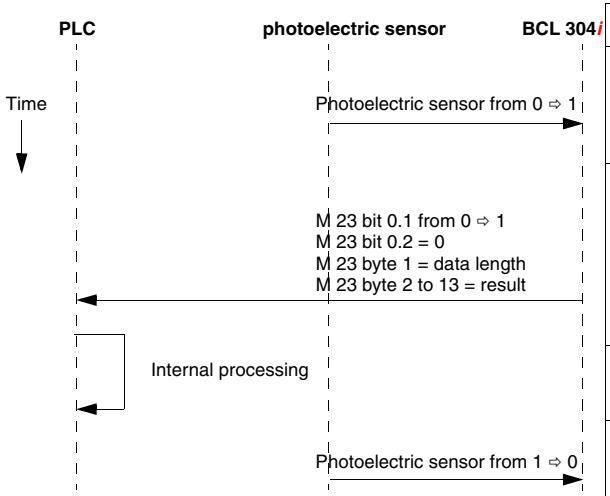

Description
The photoelectric sensor is interrupted. The signal of the switching output of the photoelectric sensor is present at the switching input of the BCL 304*i* and activates the scanner.
The bar codes that have been read are processed and transmitted by module 23: Reading concluded bit 0.1 = 1 and bar code not decoded bit 0.2 = 0. The data length is entered in byte 1, in this case 12 decimal. The decoding result is transmitted in the following 12 bytes.
Internal data processing
The beam of the photoelectric sensor is cleared and sets the switching input of the BCL 304*i* to 0. This deactivates the scanner.

Unsuccessful reading:

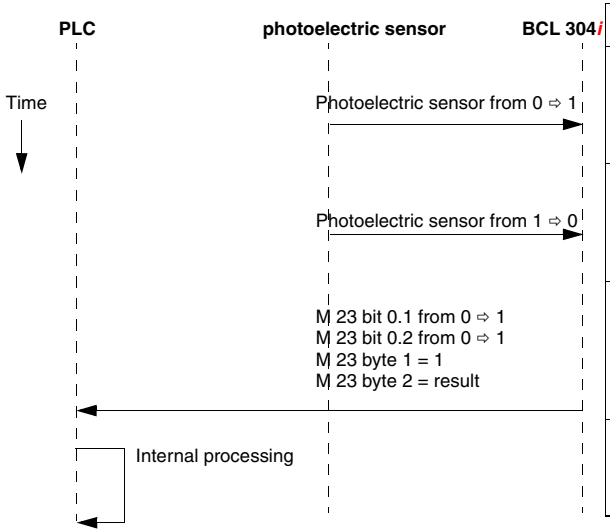

Description
The photoelectric sensor is interrupted. The signal of the switching output of the photoelectric sensor is present at the switching input of the BCL 304*i* and activates the scanner.
The beam of the photoelectric sensor is cleared before a read result is present. The photoelectric sensor sets the switching input of the BCL 304*i* to 0 and deactivates the scanner.
The module decoding state signals: Reading concluded bit 0.1 = 1 and bar code **not** decoded bit 0.2 = 1. The data length is entered in byte 1. The result hex 3F ("?" = no read) is transmitted.
Internal data processing.

12 Diagnostics and troubleshooting

12.1 General causes of errors

Error	Possible error cause	Measures
Status LED **PWR**		
Off	• No supply voltage connected to the device • Hardware error	☐ Check supply voltage ☐ Send device to customer service
Red, flashing	• Warning	☐ Query diagnostic data and carry out the resulting measures
Red, continuous light	• Error: no function possible	☐ Internal device error, send in device
Orange, continuous light	• Device in service mode	☐ Reset service mode with webConfig tool
Status LED **BUS**		
Off	• No supply voltage connected to the device • Device not yet recognized by the PROFIBUS	☐ Check supply voltage ☐ Send device to customer service
Red, flashing	• Error on the PROFIBUS	☐ Can be corrected by resetting
Red, continuous light	• Error on the PROFIBUS	☐ Check wiring and termination. ☐ Cannot be corrected by resetting ☐ Send device to customer service

Table 12.1: General causes of errors

12.2 Interface errors

Error	Possible error cause	Measures
No communication via USB service interface	• Incorrect connection cable • Connected BCL 304*i* is not detected	☐ Check connection cable ☐ Install USB driver
No communication via PROFIBUS. **BUS** status LED continuous red light	• Incorrect wiring • Wrong termination • Incorrect PROFIBUS address set • Incorrect configuration	☐ Check wiring ☐ Check termination ☐ Check PROFIBUS address ☐ Check configuration of the device in the configuration tool
Sporadic errors at the PROFIBUS	• Incorrect wiring • Wrong termination • Effects due to EMC • Overall network expansion exceeded	☐ Check wiring ☐ Check termination ☐ Check shielding ☐ Check grounding concept and connection to FE ☐ Avoid EMC coupling caused by power cables laid parallel to device lines ☐ Check max. network expansion as a function of the set baud rate

Table 12.2: Interface error

Notice!

*Please use **chapter 12 as a master copy** should servicing be required.*
Cross the items in the "Measures" column which you have already examined, fill out the following address field and fax the pages together with your service contract to the fax number listed below.

Customer data (please complete)

Device type:	
Company:	
Contact partner / department:	
Phone (direct):	
Fax:	
Street / No:	
ZIP code/City:	
Country:	

Leuze Service fax number:

+49 7021 573 - 199

13 Type overview and accessories

13.1 Part number code

BCL 300i OM100D H

Heating option	H =	With heating
Display option	D =	With display and two control button
Beam exit	0	Lateral
	2	Front
Optics	N	High Density (near)
	M	Medium Density (medium distance)
	F	Low Density (remote)
	L	Long Range (very large distances)
Scanning principle	S	Line scanner (single line)
	R1	Line scanner (raster)
	O	Oscillating-mirror scanner
	i =	Integrated fieldbus technology
Interface	00	RS 232/RS 422 (standalone)
	01	RS 485 (multiNet Slave)
	04	PROFIBUS DP
	08	ETHERNET TCP/IP, UDP
	48	PROFINET-IO RT
	BCL	Bar code reader

Table 13.1: Part number codeBCL 304*i*

13.2 Type overview BCL 304*i*

PROFIBUS DP with 1x RS 485 interface at 2x M12 B-coded connectors

Type designation	Description	Part no.
Single line scanner with frontal beam exit		
BCL 304*i* S N 102	with N optics	50116367
BCL 304*i* S M 102	with M optics	50116361
BCL 304*i* S F 102	with F optics	50116349
BCL 304*i* S L 102	with L optics	50116355
BCL 304*i* S N 102 D	with N optics and display	50116366
BCL 304*i* S M 102 D	with M optics and display	50116360
BCL 304*i* S F 102 D	with F optics and display	50116348
BCL 304*i* S L 102 D	with L optics and display	50116354
BCL 304*i* S N 102 D H	with N optics, display and heating	50116365
BCL 304*i* S M 102 D H	with M optics, display and heating	50116359
BCL 304*i* S F 102 D H	with F optics, display and heating	50116247
BCL 304*i* S L 102 D H	with L optics, display and heating	50116353
Raster scanner with frontal beam exit		
BCL 304*i* R1 N 102	with N optics	50116343
BCL 304*i* R1 M 102	with M optics	50116339
BCL 304*i* R1 F 102	with F optics	50116335
BCL 304*i* R1 N 102 D	with N optics and display	50116342
BCL 304*i* R1 M 102 D	with M optics and display	50116338
BCL 304*i* R1 F 102 D	with F optics and display	50116334

Table 13.2: Type overview BCL 304*i*

Type designation	Description	Part no.
Single line scanner with deflection mirror		
BCL 304*i* S N 100	with N optics	50116364
BCL 304*i* S M 100	with M optics	50116358
BCL 304*i* S F 100	with F optics	50116346
BCL 304*i* S L 100	with L optics	50116352
BCL 304*i* S N 100 D	with N optics and display	50116363
BCL 304*i* S M 100 D	with M optics and display	50116357
BCL 304*i* S F 100 D	with F optics and display	50116345
BCL 304*i* S L 100 D	with L optics and display	50116351
BCL 304*i* S N 100 D H	with N optics, display and heating	50116362
BCL 304*i* S M 100 D H	with M optics, display and heating	50116356
BCL 304*i* S F 100 D H	with F optics, display and heating	50116344
BCL 304*i* S L 100 D H	with L optics, display and heating	50116350
Raster scanner with deflection mirror		
BCL 304*i* R1 N 100	with N optics	50116341
BCL 304*i* R1 M 100	with M optics	50116337
BCL 304*i* R1 F 100	with F optics	50116333
BCL 304*i* R1 N 100 D	with N optics and display	50116340
BCL 304*i* R1 M 100 D	with M optics and display	50116336
BCL 304*i* R1 F 100 D	with F optics and display	50116332
Oscillating mirror scanner		
BCL 304*i* O N 100	with N optics	50116329
BCL 304*i* O M 100	with M optics	50116326
BCL 304*i* O F 100	with F optics	50116320
BCL 304*i* O L 100	with L optics	50116323
BCL 304*i* O N 100 D	with N optics and display	50116330
BCL 304*i* O M 100 D	with M optics and display	50116327
BCL 304*i* O F 100 D	with F optics and display	50116321
BCL 304*i* O L 100 D	with L optics and display	50116324
BCL 304*i* O N 100 D H	with N optics, display and heating	50116331
BCL 304*i* O M 100 D H	with M optics, display and heating	50116328
BCL 304*i* O F 100 D H	with F optics, display and heating	50116322
BCL 304*i* O L 100 D H	with L optics, display and heating	50116325

Table 13.2: Type overview BCL 304*i*

13.3 Connection hood accessories

Type designation	Description	Part no.
MS 304	Hood with integrated connectors for BCL 304*i*	50116470
MK 304	Terminal hood for BCL 304*i*	50116465

Table 13.3: Connection hoods for the BCL 304*i*

13.4 Accessory terminating resistor

Type designation	Description	Part no.
TS 02-4-SO M12	M12 connector with integrated terminating resistor for BUS OUT	50038539

Table 13.4: Terminating resistor for the BCL 304*i*

13.5 Accessory connectors

Type designation	Description	Part no.
KD 02-5-BA	M12 axial socket for HOST or BUS IN, shielded	50038538
KD 02-5-SA	M12 axial connector for BUS OUT, shielded	50038537
KD 095-5A	M12 axial socket for voltage supply, shielded	50020501

Table 13.5: Connectors for the BCL 304*i*

13.6 Accessory USB cable

Type designation	Description	Part no.
KB USBA-USBminiB	USB service cable, 2 type A and Mini-B type connectors, length 1m	50117011

Table 13.6: Service cable for the BCL 304*i*

13.7 Accessory mounting device

Type designation	Description	Part no.
BT 56	Mounting device for rod	50027375
BT 59	Mounting device for ITEM	50111224

Table 13.7: Mounting devices for the BCL 304*i*

13.8 Reflector accessories for autoReflAct

Type designation	Description	Part no.
Reflective tape no. 4 / 100 x 100 mm	Reflective tape as reflector for autoReflAct operation	50106119

Table 13.8: Reflector for autoReflAct operation

13.9 Accessory ready-made cables for voltage supply

13.9.1 Contact assignment of PWR connection cable

PWR connection cable (5-pin socket, A-coded, not shielded)			
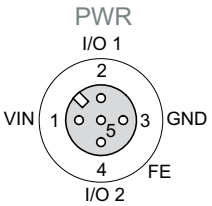 **M12 socket (A-coded)**	**Pin**	**Name**	**Core color**
	1	VIN	**brown**
	2	I/O 1	**white**
	3	GND	**blue**
	4	I/O 2	**black**
	5	FE	**gray**
	Thread	FE	**bare**

Notice!

These cables are not shielded.

13.9.2 Specifications of the cables for voltage supply

Operating temperature range	in rest state:	-30°C … +70°C
	in motion:	5°C … +70°C
Material	sheathing: PVC	
Bending radius	> 50mm	

13.9.3 Order codes of the cables for voltage supply

Type designation	Description	Part no.
K-D M12A-5P-5m-PVC	M12 socket for PWR, axial connector, open cable end, cable length 5m, not shielded	50104557
K-D M12A-5P-10m-PVC	M12 socket for PWR, axial plug outlet, open cable end, cable length 10m, not shielded	50104559

Table 13.9: PWR cables for the BCL 304*i*

13.10 Accessory ready-made cables for bus connection

13.10.1 General information

- Cables **KB PB…** for connecting to the BUS IN/BUS OUT M12 connector for PROFIBUS
- Standard cable available in lengths from 2 … 30m
- Special cables on request.

13.10.2 Contact assignments of PROFIBUS connection cable KB PB…

PROFIBUS connection cable (5-pin socket/connector, B-coded)			
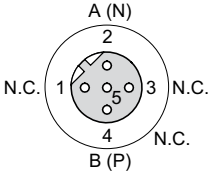 **M12 socket (B-coded)**	**Pin**	**Name**	**Core color**
	1	N.C.	–
	2	A (N)	**green**
	3	N.C.	–
	4	B (P)	**red**
	5	N.C.	–
	Thread	FE	**bare**
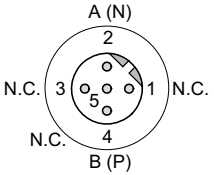 **M12 connector (B-coded)**			

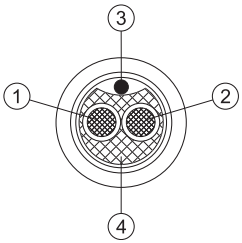

Shielding contact via connector housing!

1 Conductor with insulation **red**
2 Conductor with insulation **green**
3 Drain wire
4 Fibrous fleece

Figure 13.10: Cable configuration PROFIBUS/multiNet plus connection cables

13.10.3 Technical data of interface connection cables

Operating temperature range	in rest state: -40°C … +80°C in motion: -5°C … +80°C
Material	the cables fulfill the PROFIBUS requirements and are free of halogens, silicone, and PVC
Bending radius	> 80mm, suitable for drag chains

13.10.4 Order code interface connection cable

Type designation	Description	Part no.
M12 socket for BUS IN, axial connector, open cable end		
KB PB-2000-BA	Cable length 2m	50104181
KB PB-5000-BA	Cable length 5m	50104180
KB PB-10000-BA	Cable length 10m	50104179
KB PB-15000-BA	Cable length 15m	50104178
KB PB-20000-BA	Cable length 20m	50104177
KB PB-25000-BA	Cable length 25m	50104176
KB PB-30000-BA	Cable length 30m	50104175
M12 connector for BUS OUT, axial connector, open cable end		
KB PB-2000-SA	Cable length 2m	50104188
KB PB-5000-SA	Cable length 5m	50104187
KB PB-10000-SA	Cable length 10m	50104186
KB PB-15000-SA	Cable length 15m	50104185
KB PB-20000-SA	Cable length 20m	50104184
KB PB-25000-SA	Cable length 25m	50104183
KB PB-30000-SA	Cable length 30m	50104182
M12 connector + M12 socket, axial connectors		
KB PB-1000-SBA	Cable length 1m	50104096
KB PB-2000-SBA	Cable length 2m	50104097
KB PB-5000-SBA	Cable length 5m	50104098
KB PB-10000-SBA	Cable length 10m	50104099
KB PB-15000-SBA	Cable length 15m	50104100
KB PB-20000-SBA	Cable length 20m	50104101
KB PB-25000-SBA	Cable length 25m	50104174
KB PB-30000-SBA	Cable length 30m	50104173

Table 13.11: Interface connection cable for the BCL 304*i*

14 Maintenance

14.1 General maintenance information

Usually, the bar code reader BCL 304*i* does not require any maintenance by the operator.

Cleaning

Clean glass surface with a damp sponge soaked in commercial cleaning detergent. Then rub it with a soft, clean, dry cloth.

Notice!

Do not use aggressive cleaning agents such as thinner or acetone for cleaning the device. Use of improper cleaning agents can damage the housing window.

14.2 Repairs, servicing

Repairs to the device must only be carried out by the manufacturer.

↳ *Contact your Leuze distributor or service organization should repairs be required. The addresses can be found on the inside of the cover and on the back.*

Notice!

When sending devices to Leuze electronic for repair, please provide an accurate description of the error.

14.3 Disassembling, packing, disposing

Repacking

For later reuse, the device is to be packed so that it is protected.

Notice!

Electrical scrap is a special waste product! Observe the locally applicable regulations regarding disposal of the product.

15 Appendix

15.1 Declaration of Conformity

Leuze electronic

the sensor people

EG-KONFORMITÄTS-ERKLÄRUNG	EC DECLARATION OF CONFORMITY	DECLARATION CE DE CONFORMITE
Der Hersteller	The Manufacturer	Le constructeur
	Leuze electronic GmbH + Co. KG **In der Braike 1, PO Box 1111** **73277 Owen, Germany**	
erklärt, dass die nachfolgend aufgeführten Produkte den einschlägigen Anforderungen der genannten EG-Richtlinien entsprechen.	declares that the following listed products fulfil the relevant provisions of the mentioned EC Directives.	déclare que les produits identifiés suivants sont conformes aux directives CE mentionnées.
Produktbeschreibung:	Description of product:	Description de produit:
Stationärer Barcodeleser BCL 3xxi	**Stationary Barcode Reader BCL 3xxi**	**Lecteures Stationn. de Code à Barres BCL 3xxi**
Angewandte EG-Richtlinie(n):	Applied EC Directive(s):	Directive(s) CE appliquées:
2004/108/EG **2006/95/EG**	**2004/108/EC** **2006/95/EC**	**2004/108/CE** **2006/95/CE**
Angewandte Normen:	Applied standards:	Normes appliquées:
EN 61000-6-2: 2005 **EN 60825-1: 2007**		**EN 61000-6-3: 2007**

24.8.2011

Datum / Date / Date — Dr. Harald Grübel, Geschäftsführer / Director / Directeur

Leuze electronic GmbH + Co. KG
In der Braike 1
D-73277 Owen
Telefon +49 (0) 7021 573-0
Telefax +49 (0) 7021 573-199
info@leuze.de
www.leuze.com

LEO-ZQM-148-01-FO

Leuze electronic GmbH + Co. KG, Sitz Owen, Registergericht Stuttgart, HRA 230712
Persönlich haftende Gesellschafterin Leuze electronic Geschäftsführungs-GmbH,
Sitz Owen, Registergericht Stuttgart, HRB 230550
Geschäftsführer: Dr. Harald Grübel (Vorsitzender), Karsten Just
USt.-IdNr. DE 145812521 | Zollnummer 2554232
Es gelten ausschließlich unsere aktuellen Verkaufs- und Lieferbedingungen
Only our current Terms and Conditions of Sale and Delivery shall apply

Figure 15.1: Declaration of conformity BCL 304*i*

Leuze electronic

the sensor people

EG-KONFORMITÄTS-ERKLÄRUNG	EC DECLARATION OF CONFORMITY	DECLARATION CE DE CONFORMITE
Der Hersteller	The Manufacturer	Le constructeur
	Leuze electronic GmbH + Co. KG In der Braike 1, PO Box 1111 73277 Owen, Germany	
erklärt, dass die nachfolgend aufgeführten Produkte den einschlägigen Anforderungen der genannten EG-Richtlinien entsprechen.	declares that the following listed products fulfil the relevant provisions of the mentioned EC Directives.	déclare que les produits identifiés suivants sont conformes aux directives CE mentionnées.
Produktbeschreibung:	Description of product:	Description de produit:
Modulare Steckerhaube MS 3xx, Modulare Klemmhaube MK 3xx, Modulare Anschlusseinheit MA 100	**Modular hood with integrated connectors MS 3xx, Modular terminal hoods MK 3xx, Modular interfacing unit MA 100**	**Logement modulaire de prises MS 3xx, Logement modulaire de bornes MK 3xx, Unité modulaire de branchement MA 100**
Angewandte EG-Richtlinie(n):	Applied EC Directive(s):	Directive(s) CE appliquées:
2004/108/EG	**2004/108/EC**	**2004/108/CE**
Angewandte Normen:	Applied standards:	Normes appliquées:
EN 61000-6-2: 2005		**EN 61000-6-4: 2007**

Datum / Date — Dr. Harald Grübel, Geschäftsführer / Director / Directeur

Leuze electronic GmbH + Co. KG
In der Braike 1
D-73277 Owen
Telefon +49 (0) 7021 573-0
Telefax +49 (0) 7021 573-199
info@leuze.de
www.leuze.com

LEO-ZQM-148-01-FO

Leuze electronic GmbH + Co. KG, Sitz Owen, Registergericht Stuttgart, HRA 230712
Persönlich haftende Gesellschafterin Leuze electronic Geschäftsführungs-GmbH, Sitz Owen, Registergericht Stuttgart, HRB 230550
Geschäftsführer: Dr. Harald Grübel (Vorsitzender), Karsten Just
USt.-IdNr. DE 145912521 | Zollnummer 2554232

Es gelten ausschließlich unsere aktuellen Verkaufs- und Lieferbedingungen
Only our current Terms and Conditions of Sale and Delivery shall apply

Figure 15.2: Connection hood / connector unit declaration of conformity

ПРОМЭЛЕКТРОНИКА / sales@prom-elec.com

15.2 ASCII character set

ASCII	Dec.	Hex.	Oct.	Designation	Meaning
NUL	0	00	0	NULL	Zero
SOH	1	01	1	START OF HEADING	Start of heading
STX	2	02	2	START OF TEXT	Start of text characters
ETX	3	03	3	END OF TEXT	Last character of text
EOT	4	04	4	END OF TRANSMISS.	End of transmission
ENQ	5	05	5	ENQUIRY	Request for data trans.
ACK	6	06	6	ACKNOWLEDGE	Positive acknowledgment
BEL	7	07	7	BELL	Bell signal
BS	8	08	10	BACKSPACE	Backspace
HT	9	09	11	HORIZ. TABULATOR	Horizontal tabulator
LF	10	0A	12	LINE FEED	Line feed
VT	11	0B	13	VERT. TABULATOR	Vertical tabulator
FF	12	0C	14	FORM FEED	Form feed
CR	13	0D	15	CARRIAGE RETURN	Carriage return
SO	14	0E	16	SHIFT OUT	Shift out
SI	15	0F	17	SHIFT IN	Shift in
DLE	16	10	20	DATA LINK ESCAPE	Data link escape
DC1	17	11	21	DEVICE CONTROL 1	Device control character 1
DC2	18	12	22	DEVICE CONTROL 2	Device control character 2
DC3	19	13	23	DEVICE CONTROL 3	Device control character 3
DC4	20	14	24	DEVICE CONTROL 4	Device control character 4
NAK	21	15	25	NEG. ACKNOWLEDGE	Negative acknowledge
SYN	22	16	26	SYNCRONOUS IDLE	Synchronization
ETB	23	17	27	EOF TRANSM. BLOCK	End of data transmission block
CAN	24	18	30	CANCEL	Invalid
EM	25	19	31	END OF MEDIUM	End of medium
SUB	26	1A	32	SUBSTITUTE	Substitution
ESC	27	1B	33	ESCAPE	Escape
FS	28	1C	34	FILE SEPARATOR	File separator
GS	29	1D	35	GROUP SEPARATOR	Group separator
RS	30	1E	36	RECORD SEPARATOR	Record separator
US	31	1F	37	UNIT SEPARATOR	Unit separator
SP	32	20	40	SPACE	Space
!	33	21	41	EXCLAMATION POINT	Exclamation point

ASCII	Dec.	Hex.	Oct.	Designation	Meaning
"	34	22	42	QUOTATION MARK	Quotation mark
#	35	23	43	NUMBER SIGN	Number sign
$	36	24	44	DOLLAR SIGN	Dollar sign
%	37	25	45	PERCENT SIGN	Percent sign
&	38	26	46	AMPERSAND	Ampersand
’	39	27	47	APOSTROPHE	Apostrophe
(	40	28	50	OPEN. PARENTHESIS	Open parenthesis
)	41	29	51	CLOS. PARENTHESIS	Closed parenthesis
*	42	2A	52	ASTERISK	Asterisk
+	43	2B	53	PLUS	Plus sign
,	44	2C	54	COMMA	Comma
-	45	2D	55	HYPHEN (MINUS)	Hyphen
.	46	2E	56	PERIOD (DECIMAL)	Period (decimal)
/	47	2F	57	SLANT	Slant
0	48	30	60	0	Number
1	49	31	61	1	Number
2	50	32	62	2	Number
3	51	33	63	3	Number
4	52	34	64	4	Number
5	53	35	65	5	Number
6	54	36	66	6	Number
7	55	37	67	7	Number
8	56	38	70	8	Number
9	57	39	71	9	Number
:	58	3A	72	COLON	Colon
;	59	3B	73	SEMICOLON	Semicolon
<	60	3C	74	LESS THAN	Less than
=	61	3D	75	EQUALS	Equals
>	62	3E	76	GREATER THAN	Greater than
?	63	3F	77	QUESTION MARK	Question mark
@	64	40	100	COMMERCIAL AT	Commercial AT
A	65	41	101	A	Capital letter
B	66	42	102	B	Capital letter
C	67	43	103	C	Capital letter
D	68	44	104	D	Capital letter

ASCII	Dec.	Hex.	Oct.	Designation	Meaning
E	69	45	105	E	Capital letter
F	70	46	106	F	Capital letter
G	71	47	107	G	Capital letter
H	72	48	110	H	Capital letter
I	73	49	111	I	Capital letter
J	74	4A	112	J	Capital letter
K	75	4B	113	K	Capital letter
L	76	4C	114	L	Capital letter
M	77	4D	115	M	Capital letter
N	78	4E	116	N	Capital letter
O	79	4F	117	O	Capital letter
P	80	50	120	P	Capital letter
Q	81	51	121	Q	Capital letter
R	82	52	122	R	Capital letter
S	83	53	123	S	Capital letter
T	84	54	124	T	Capital letter
U	85	55	125	U	Capital letter
V	86	56	126	V	Capital letter
W	87	57	127	W	Capital letter
X	88	58	130	X	Capital letter
Y	89	59	131	Y	Capital letter
Z	90	5A	132	Z	Capital letter
[	91	5B	133	OPENING BRACKET	Opening bracket
\	92	5C	134	REVERSE SLANT	Reverse slant
]	93	5D	135	CLOSING BRACKET	Closing bracket
^	94	5E	136	CIRCUMFLEX	Circumflex
_	95	5F	137	UNDERSCORE	Underscore
‘	96	60	140	GRAVE ACCENT	Grave accent
a	97	61	141	a	Lower case letter
b	98	62	142	b	Lower case letter
c	99	63	143	c	Lower case letter
d	100	64	144	d	Lower case letter
e	101	65	145	e	Lower case letter
f	102	66	146	f	Lower case letter
g	103	67	147	g	Lower case letter

ASCII	Dec.	Hex.	Oct.	Designation	Meaning
h	104	68	150	h	Lower case letter
i	105	69	151	i	Lower case letter
j	106	6A	152	j	Lower case letter
k	107	6B	153	k	Lower case letter
l	108	6C	154	l	Lower case letter
m	109	6D	155	m	Lower case letter
n	110	6E	156	n	Lower case letter
o	111	6F	157	o	Lower case letter
p	112	70	160	p	Lower case letter
q	113	71	161	q	Lower case letter
r	114	72	162	r	Lower case letter
s	115	73	163	s	Lower case letter
t	116	74	164	t	Lower case letter
u	117	75	165	u	Lower case letter
v	118	76	166	v	Lower case letter
w	119	77	167	w	Lower case letter
x	120	78	170	x	Lower case letter
y	121	79	171	y	Lower case letter
z	122	7A	172	z	Lower case letter
{	123	7B	173	OPENING BRACE	Opening brace
|	124	7C	174	VERTICAL LINE	Vertical line
}	125	7D	175	CLOSING BRACE	Closing brace
~	126	7E	176	TILDE	Tilde
DEL	127	7F	177	DELETE (RUBOUT)	Delete

15.3 Bar code samples

15.3.1 Module 0.3

Code type 01: Interleaved 2 of 5

Modul 0,3

1122334455

Code type 02: Code 39

Modul 0,3

135AC

Code type 11: Codabar

Modul 0,3

A121314A

Code 128

Modul 0,3

abcde

Code type 08: EAN 128

Modul 0,3

leuze

Code type 06: UPC-A

SC 2

1 23456 78901 2

Code type 07: EAN 8

SC 3

34567890

Code type 10: EAN 13 Add-on

SC 0 S

77889

1 122334 455666

Code type 13: GS1 DataBar OMNIDIRECTIONAL

(01) 0 0000123 45678 4

Figure 15.3: Bar code sample labels (module 0.3)

15.3.2 Module 0.5

Code type 01: Interleaved 2 of 5

Modul 0,5

6677889900

Code type 02: Code 39

Modul 0,5

246BD

Code type 11: Codabar

Modul 0,5

A1511617A

Code 128

Modul 0,5

fghij

Code type 08: EAN 128

Modul 0,5

LEUZE

Code type 06: UPC-A

SC 4

0 98765 43219 8

Code type 07: EAN 8

SC 6

9876 5430

Code type 10: EAN 13 Add-on

SC 2

0 099887 766550 44332

Figure 15.4: Bar code sample labels (module 0.5)