Leuze electronic

the sensor people

SMART
SENSOR
BUSINESS

BCL 900i

Barcode Scanner

EN 2015/10 - 50130069
Subject to change
without prior notice

Original operating instructions

ПРОМЭЛЕКТРОНИКА / sales@prom-elec.com

CONTENTS

REFERENCES ..... **vii**
Reference Documentation vii
Support Through the Website vii
Patents vii

CONVENTIONS ..... **viii**

COMPLIANCE ..... **viii**
Electrical Safety viii
Laser Safety viii
Warning and Serial labels ix
Power Supply x
CSA Listing x
CE Compliance x
FCC Compliance xi

GENERAL VIEW ..... **xii**

1 INTRODUCTION **1**
1.1 Product Description 1
1.2 Applications 1
1.3 Model Description 2
1.4 BCL 900i versions 2
1.5 Human Machine Interface 3
1.6 Accessories 4
1.7 Photoelectric Sensor 5
1.8 Encoder (Tachometer) 6
1.9 MA Industrial Connection Box 7
1.10 MSC 900 System Controller 8

2 MECHANICAL INSTALLATION **9**
2.1 Preparing for Mechanical Installation 9
2.2 Unpacking Instructions 10
2.3 Installation Sequence 11
2.4 What You Need to Know About Your Application 12
2.5 Installation 13
2.5.1 Dimensions and Clearances 13
2.5.2 Physical Support Requirements 13
2.5.3 Vibration Limitations 13
2.5.4 General Mounting Guidelines 14
2.5.5 Mounting Structure Considerations 15
2.5.6 Mounting the Scanner 16
2.5.7 Positioning the Scanners 19

3 ELECTRICAL INSTALLATION **20**
3.1 Preparing for Electrical Installation 20
3.2 Connecting a BCL 900i Scanner 21
3.3 Typical Connection Block Diagrams 22
3.3.1 Single BCL 900i Barcode Scanner to MA 900 22
3.3.2 Master/Slave Array with MA 900 23
3.3.3 BCL 900i Barcode Scanners in an Array with MSC 900 Master 24
3.4 General Electrical Installaion guidelines and Precautions 26
3.5 BCL 900i Connector Panels 27

3.6 Connecting a PC to the BCL 900i....28
3.7 Power Connector Pin-Out Table....28
3.8 Power Connections....29
3.9 MA 900 Connection Box....30
3.9.1 Wiring Into the MA 900 Connection Box....30
3.10 Photoelectric Sensor Connections to MA 900....32
3.10.1 Photoelectric Sensor (NPN)....33
3.10.2 Photoelectric Sensor (PNP)....34
3.11 Tachometer Wiring to MA 900....35
3.11.1 Encoder/Tachometer Wiring for NPN Output (two models)....35
3.11.2 Encoder/Tachometer Wiring for PNP Output (two models)....37
3.12 Digital Output Configuration to MA 900....39
3.12.1 Unpowered Outputs....40
3.12.2 Powered Outputs....41
3.13 Connecting to the MSC 900 System Controller (optional)....42
3.14 Check Scanner Installation....43

4 USER INTERFACE....44
4.1 Getting Started....44
4.1.1 Prerequisites....44
4.1.2 Starting the User Interface....45
4.2 User Interface Basics....47
4.2.1 BCL 900i User Interface Menu Tree....47
4.2.2 Entering Text Using the Text Entry Tool....47
4.2.3 Getting Help....48
4.3 Modify Settings....49
4.4 Modify Settings | System Info....50
4.5 Modify Settings | Global Settings....53
4.5.1 Modify Settings | Global Settings | Operating Mode....54
4.5.2 Modify Settings | Global Settings | Barcode Settings Table....69
4.5.3 Modify Settings | Global Settings | Barcode Configuration....75
Strip Filter Settings....79
Strip Filter Settings....84
Strip Filter Settings....98
4.5.4 Modify Settings | Global Settings | Serial Ports....99
4.5.5 Modify Settings | Global Settings | Ethernet....103
User Socket *n*....107
4.5.6 Modify Settings | Global Settings | Messaging....111
4.5.7 Modify Settings | Global Settings | Digital I/O....133
4.5.8 Modify Settings | Global Settings | Diagnostics....136
4.5.9 Modify Settings | Global Settings | Energy Saving....138
4.5.10 Modify Settings | Global Settings | HMI Settings (Human-Machine Interface)....143
4.6 Device Settings....145
4.6.1 Device Settings | Device Name | Device Info....146
4.6.2 Device Settings | Device Name | Mounting....148
4.6.3 Device Settings | Device Name | Options....150
4.7 Diagnostics....152
4.7.1 Diagnostics | Monitor....153
4.7.2 Diagnostics | Read Test....155
4.7.3 Diagnostics | Status Viewer....156
4.8 Utilities....159
4.8.1 Utilities | Backup or Restore....159
4.8.2 Utilities | Reboot....161
4.8.3 Utilities | Update Firmware....162

5 BARCODE SCANNING FEATURES 164
5.1 First-time Startup 164
5.1.1 Default Parameters 164
5.1.2 Check Operations using Test Mode 164
5.2 Basic Installation Procedures with the MA 900 166
5.3 Basic Installation with MSC 900 Controller 169
5.4 LED Indicators 173
5.5 Control Panel Buttons 174
5.5.1 Human Machine Interface 174
HMI Functions (Mode) 174
Test Mode 176
Learn 176
Setup 176
Netconfig 176
5.5.2 Restore Button and Other Functions 177
5.6 PackTrack™ 178
5.6.1 Using the PackTrack Wizard 180
5.6.2 Top-Mounted Barcode Scanner Calibration Using PackTrack 184
5.6.3 Side-Mounted Barcode Scanner Calibration Using PackTrack 191
5.6.4 Bottom-Mounted Barcode Scanner Calibration Using PackTrack 198
5.6.5 Verifying PackTrack Calibration 199
5.7 Replacing an Installed BCL 900i 202
5.7.1 Replacing a Standalone Scanner Using Restore 202
5.7.2 Replacing a Slave Scanner in an Array/Tunnel Automatically 203
5.7.3 Replacing a Slave Scanner in an Array/Tunnel Using Restore 204
5.7.4 Replacing a Master Scanner in an Array/Tunnel Using Restore 204
5.7.5 Checking the Operation of the Replacement 205
5.8 Typical Layouts 206
5.8.1 Large Synchronized Network Layout 206
5.9 Code Reconstruction Technology (CRT) 209
5.9.1 Tilt Angle for Code Reconstruction Technology 210
5.9.2 Minimum Code Height For Code Reconstruction Technology 211
5.10 Reading Diagram 213
BCL 900i SM 102 214
BCL 900i SN 102 218

6 MAINTENANCE 223
6.1 Overview 223
6.2 Maintenance Tasks 224
6.2.1 Cleaning the Exit Window 225
6.2.2 Cleaning the Photoelectric Sensor 226
6.2.3 Cleaning the Tachometer 227
6.2.4 Tighten Mounting Hardware 228
6.2.5 Checking Barcode Scanning System Connections 228
6.2.6 Verify Barcode Scanner Operation 228
6.2.7 Verify Photoelectric Sensor Operation 228
6.2.8 Verify Tachometer Operation 229

7 TROUBLESHOOTING 230
7.1 Error Codes and Resolutions 231

8 TECHNICAL FEATURES 237
8.1 Technical Specifications 237

INDEX 240

REFERENCES

REFERENCE DOCUMENTATION

The documentation related to the BCL 900i management is listed below:

- MA 900 Connection Box Installation Manuals
- MSC 900 Controller Manuals

SUPPORT THROUGH THE WEBSITE

Leuze electronic provides several services as well as technical support through its website. Log on to **www.leuze.de** and click on **PRODUCTS** for further information:

- **PRODUCTS – STATIONARY BARCODE READERS**
  Select your product from the links on the **Stationary Barcode Readers** page. The product page describes specific Info, Features, Applications, Models, Accessories, and Downloads including documentation, software drivers, and utility programs.

PATENTS

This product is covered by one or more of the following patents:

Utility patents: EP0789315B1, EP0851376B1, EP0926615B1, EP0959426B9, EP1217571B1, EP1363228B1, JP4033958B2, JP4376353B2, US5992740, US6177979, US6347740, US6394352, US6443360, US6527184, US6629639, US6742710

CONVENTIONS

WARNINGS OR CAUTIONS: This symbol identifies a hazard or procedure that, if incorrectly performed, could cause personal injury or result in equipment damage. It is also used to bring the user's attention to details that are considered IMPORTANT.

HIGH VOLTAGE CAUTION: This symbol alerts the user they are about to perform an action involving, either a dangerous level of voltage, or to warn against an action that could result in damage to devices or electrical shock.

LASER CAUTION: This symbol alerts the user they are about to perform an action involving possible exposure to laser light radiation.

ESD CAUTION: This symbol identifies a procedure that requires you take measures to prevent Electrostatic Discharge (ESD) e.g., use an ESD wrist strap. Circuit boards are most at risk. Please follow ESD procedures.

NOTES: This symbol draws attention to details or procedures that may be useful in improving, maintaining, or enhancing the performance of the hardware or software being discussed.

COMPLIANCE

ELECTRICAL SAFETY

This product conforms to the applicable requirements contained in the European Standard for electrical safety EN 60950 at the date of manufacture.

LASER SAFETY

The following information is provided to comply with the rules imposed by international authorities and refers to the correct use of the BCL 900i barcode scanners.

Standard Regulations

These barcode scanners use low-power laser diodes. Avoid staring at the beam as one would with any very strong light source, such as the sun.

Take care when installing the laser device to avoid inadvertent laser beam contact with the eye of an observer, including through reflective surfaces.

This product conforms to the applicable requirements of IEC 60825-1 and complies with 21 CFR 1040.10 except for deviations pursuant to Laser Notice N° 50, date June 24, 2007. The scanner is classified as a Class 2 laser product according to IEC 60825-1 regulations.

There is a safety device which allows the laser to be switched on only if the motor is rotating above the threshold for its correct scanning speed.

WARNING: Use of controls or adjustments or performance of procedures other than those specified herein may result in exposure to hazardous visible laser light.

WARNING AND SERIAL LABELS

The Warning Label on the front of the barcode scanner indicates exposure to laser light and the device classification.

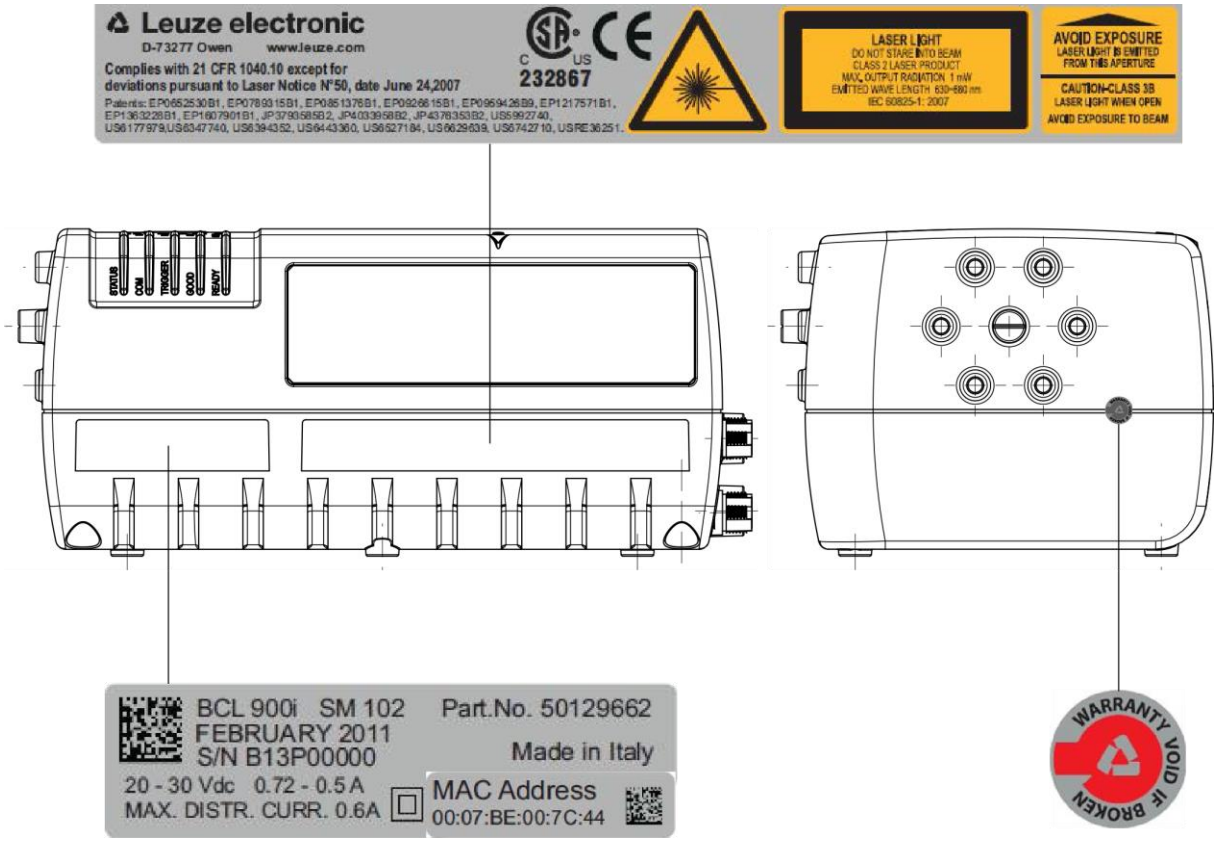

Figure 1: Warning and Device Class Label Location

Produit(s) conforme selon 21CFR 1040.10 sauf des dérogations relatives à la Laser Notice N° 50, date Juin 24, 2007.

Dans le paquet il y a l'étiquette(s) pour les pays où le texte d'avertissement en français sont obligatoires. Le(s) mettre sur le produit à la place de la version anglaise.

Figure 2: Exemple d'étiquettes d'avertissement laser

WARNING: Disconnect the power supply when installing the device or during maintenance to avoid unintentional exposure to laser light.

WARNING: There are no user serviceable parts inside the barcode scanner. Service should only be performed by Leuze electronic trained and certified technicians.

Any violation of the optical parts in particular could result in exposure to Class 3B laser light.

POWER SUPPLY

This product is intended to be installed by Qualified Personnel only.

This product is intended to be supplied by a UL listed or CSA Certified Power unit with “Class 2” or LPS power source.

CSA LISTING

C US **Certificate:** 70002952

3862 13 INFORMATION TECHNOLOGY EQUIPMENT-(CSA 60950-1-07, Second Edition) 3862 93 INFORMATION TECHNOLOGY EQUIPMENT-(UL 60950-1, Second Edition-Certified to U.S. Stds)

Unattended scanning system, models BCL 900i-XYWZ rated 20-30 VDC 0.72-0.5 A and 20-30 VDC 1-0.7 A

CE COMPLIANCE

WARNING: This is a Class A product. In a domestic environment this product may cause radio interference in which case the user may be required to take adequate measures.

FCC COMPLIANCE

Modifications or changes to this equipment without the expressed written approval of Leuze electronic could void the authority to use the equipment.

This device complies with PART 15 of the FCC Rules. Operation is subject to the following two conditions: (1) This device may not cause harmful interference, and (2) this device must accept any interference received, including interference which may cause undesired operation.

This equipment has been tested and found to comply with the limits for a Class A digital device, pursuant to part 15 of the FCC Rules. These limits are designed to provide reasonable protection against harmful interference when the equipment is operated in a commercial environment. This equipment generates, uses, and can radiate radio frequency energy and, if not installed and used in accordance with the instruction manual, may cause harmful interference to radio communications. Operation of this equipment in a residential area is likely to cause harmful interference in which case the user will be required to correct the interference at his/her own expense.

GENERAL VIEW

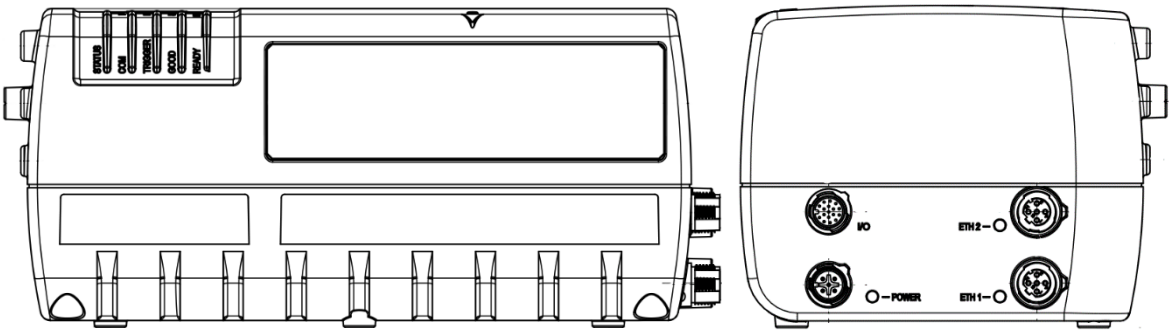

Figure 3: BCL 900i Barcode Scanner Front and Left Side Views

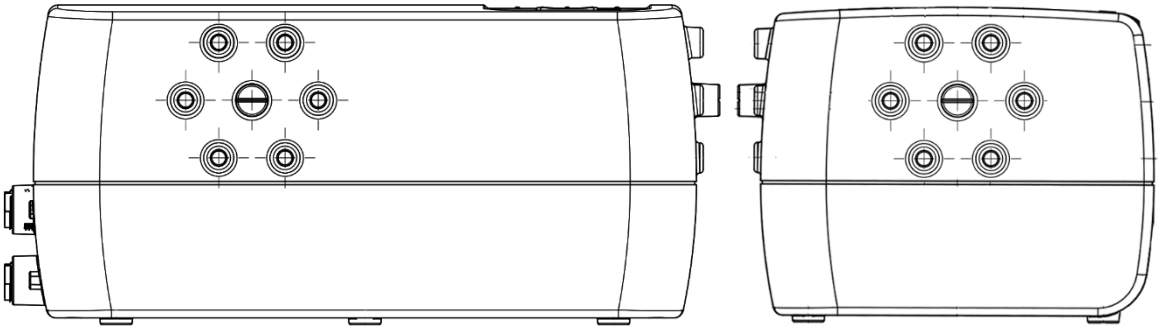

Figure 4: BCL 900i Barcode Scanner Back and Right Side Views

1 INTRODUCTION

1.1 PRODUCT DESCRIPTION

The BCL 900i barcode scanner complete with decoder is designed to provide an innovative and high performance solution in omnidirectional reading applications by combining the following advanced technologies with Leuze electronic solid experience in the material handling sector.

Some of the main features of the BCL 900i are listed below:

- Scanning speed 1000 scans/sec
- Reads all popular codes
- Supply voltage from 20 to 30 vdc
- Test mode to verify the reading features and exact positioning of the scanner without the need for external tools
- Programmable in several different operating modes to suit the most various barcode reading system requirements
- Light source: solid state laser diodes; the light emitted has a wave length between 630~680 nm. For laser safety precautions refer to the “compliance” section at the beginning of this manual

1.2 APPLICATIONS

The BCL 900i barcode scanners are specifically designed for industrial applications and for all cases requiring high reading performance such as:

- Code Reconstruction Technology (CRT)
- Reading of codes covered by plastic film
- Reading of codes with a wide depth of field
- Reading codes within a wide field of view
- Reading of high resolution codes positioned at long distances from the reader
- Code reading on fast moving objects

These barcode scanners are designed for both single-reader layouts and multi-reader layouts. For typical layouts, see *section 5.8*.

1.3 MODEL DESCRIPTION

The BCL 900i barcode scanner is available in versions that differ depending on the interface connection, the optical resolution and on the optic version:

1.4 BCL 900i VERSIONS

Model	Description	Part Number
BCL 900i SN 102	High Density	50129661
BCL 900i SM 102	Medium Density	50129662

1.5 HUMAN MACHINE INTERFACE

The BCL 900i barcode scanner includes two external buttons that make up the HMI interface and perform specific tasks without the need of connecting to the **BCL 900i User Interface**. *See 5.5* for functional description.

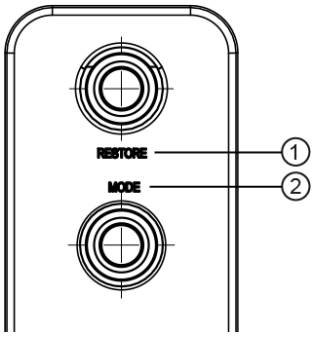

① RESTORE
② MODE

Figure 5: BCL 900i Interface Buttons

NOTE: Some of these functions may be performed using the User Interface. *See Chapter 4.*

1.6 ACCESSORIES

The following accessories are available on request for the BCL 900i barcode scanner.

Name	Description	Part Number
Cables and Terminators		
KB 900 - 1000 MSC	Interface Cable 1m length between MA 900 and MSC 900	50131533
KB 900 - 1000	Cable 1 m length	50131531
KB 900 - 3000	Cable 3 m length	50131529
KB 900 - 5000	Cable 5 m length	50131532
Connection Boxes		
MA 900	Connection Box for BCL 900i	50129663
Controllers		
MSC 900 - 1000	Controller (Standard)	50129664
MSC 900 - 1100	Controller (Profibus)	50129665
MSC 900 - 1200	Controller Profinet	50129666
Brackets		
BT 900	BCL 900i L-shape Mounting Bracket	50131534

1.7 PHOTOELECTRIC SENSOR

The optional Photoelectric Sensor is used in barcode scanner systems to detect the presence of an item in the scanning area.

The photoelectric sensor is used in singulated systems where the packages are separated by an open space between the trailing edge of one package and the leading edge of the next. The photoelectric sensor, along with the encoder, enables a programmable transmit point at a defined distance from the sensor. Without the photoelectric sensor, the barcode scanner can be run in continuous mode. *See 4.5.1* ***Modify Settings | Global Settings | Operating Mode****.*

Depending on the application, these devices may need to be configured differently. While the photoelectric sensor and tachometer work well with belt conveyors, a special configuration is needed for tilt-tray and cross-belt sorter applications. *See section 3.10 for wiring options.*

1.8 ENCODER (TACHOMETER)

The tachometer provides a continuous pulse to the system, which provides feedback on conveyor speed and transmit point, and can be used to help track the package position along the length of the conveyor. *See section 3.11 for wiring options.*

1.9 MA INDUSTRIAL CONNECTION BOX

MA Series are industrial connection boxes that can be used to connect the barcode scanners to an encoder/tachometer, photoelectric sensor, serial devices, relays, or other peripherals. The MA 900 includes a Backup Module, which allows easy parameter restore and backup operations. The Backup Module also provides an easy way to upload existing parameters to a replacement barcode scanner when necessary. *See section 3.9.1 for wiring options.*

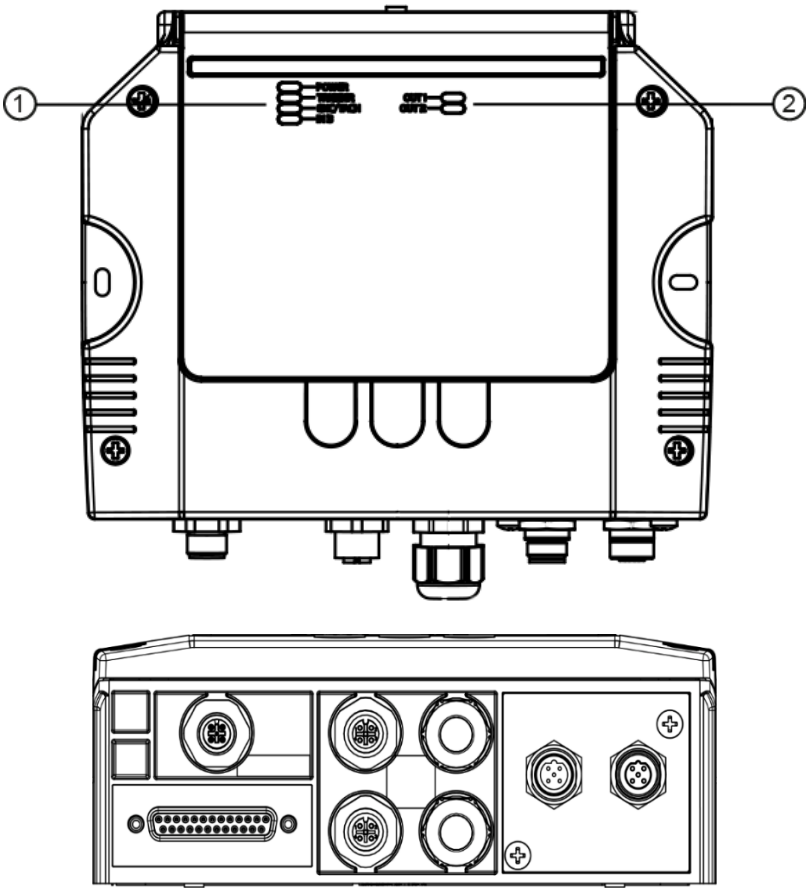

① POWER
TRIGGER
ENC/TACH
IN3
② OUT1
OUT2

Figure 6: MA 900 Connection Box

NOTE: Scanner operation requires a MA 900 Connection Box or MSC 900 controller.

Industrial Connection Box

MA 900 Connection Box	MA 900 for BCL 900i	50129663

1.10 MSC 900 SYSTEM CONTROLLER

The MSC 900 Controller offers all the necessary functions to make the phases of installation, setup, testing, and maintenance of the omni-directional reading array or tunnel easy and quick.

The MSC 900 Controller is fully compatible with BCL 900i scanner and its sturdy mechanical structure makes the MSC 900 Controller the ideal solution for industrial environments. The Controller allows connection to the Trigger and Encoder/Tachometer. PNP inputs are available via M12 circular connectors, placed on the lower front panel *(see section 3.11).*

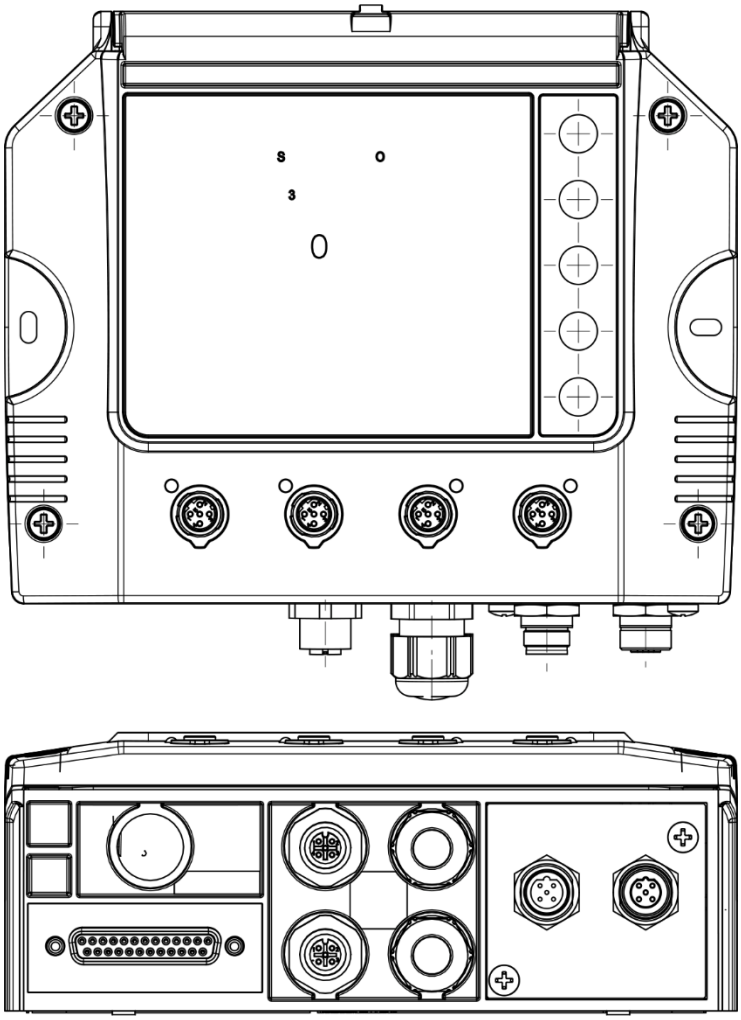

Figure 7: MSC 900 System Controller

System Controller

MSC 900 - 1000 System Controller	Standard	50129664
MSC 900 - 1100 System Controller	Profibus	50129665
MSC 900 - 1200 System Controller	Profinet	50129666

2 MECHANICAL INSTALLATION

WARNING: Electrical Installation by Qualified Service Technicians Only! Procedures may involve exposure to high-voltage. A trained and authorized technician must perform these procedures. Do not attempt to perform any electrical installation procedures unless you are a trained technician.

IMPORTANT: BCL 900i barcode scanners contain electronics that may be affected by electrostatic discharge (ESD). To prevent personal injury or damage to the unit, please follow the safety precautions and warnings found in the References section at the beginning of this manual. Failure to follow these precautions may void your warranty.

2.1 PREPARING FOR MECHANICAL INSTALLATION

IMPORTANT: Application-specific drawings and documents provided by Leuze electronic supersede any contradictory content in this manual.

Before mounting any components, please do the following:

- Read all instructions before beginning your installation.
- Define and confirm the accuracy of your application's requirements and structure position, especially the height of the conveyor from the floor.
- Review all installation-specific drawings provided with your equipment.
- Review and plan the mechanical installation of all devices used in your application. Be sure to allow adequate clearance for maintenance.
- Review and plan the power requirements for your application.
- Check the contents of the shipping cartons against the packing list.
- Record all product serial numbers.

NOTE: Refer to the ***Chapter 3 Electrical Installation*** and Reference Documentation for details on connecting your barcode scanners to other devices in the system.

WARNING: When installing several scanners, take care to position them so that no laser beam enters the reading window of other scanners. This condition could occur more frequently for side mounted applications. If these precautions are not followed, read rate could be negatively affected. To resolve this problem, it is sufficient to slightly change the inclination and position of one of the two scanners involved if possible.

2.2 UNPACKING INSTRUCTIONS

Verify that the BCL 900i barcode scanners and all the parts supplied with the equipment are present and intact when opening the packaging; the list of parts includes:

- BCL 900i reader
- L-shape Mounting Bracket BT 900
- Mounting screws (two types) and washers
- BCL 900i Leaflet with Barcode Sample inside

2.3 INSTALLATION SEQUENCE

NOTE: Everything should be MECHANICALLY INSTALLED before performing any ELECTRICAL INSTALLATION.
See Chapter 3 Electrical Installation for electrical installation details.

To complete mechanical installation and setup, you must:

- Review the details of your application's requirements
- Erect mounting structure or other supporting structures
- Determine and mark the Mounting Bracket location(s)
- Mount the bracket to the mounting structure
- Mount the BCL 900i to its mounting bracket
- Mount the photoelectric sensor to the mounting structure (optional)
- Mount the tachometer to the mounting structure (optional)
- Mount the MA Connection Box to the mounting structure
- Mount the MSC 900 to the mounting structure, if necessary
- Complete electrical installation *(See Chapter 3)*
- Align the BCL 900i for proper operation
- Configure the BCL 900i *(See Chapter 4)*
- Check BCL 900i operations *(See Chapter 5)*

2.4 WHAT YOU NEED TO KNOW ABOUT YOUR APPLICATION

To assure you get optimal performance out of your BCL 900i, it must be installed to meet the complete needs of your application. Therefore, take the time to learn the details of your application. The better you know your application, the easier it is to apply the BCL 900i's capabilities to meet your application's requirements.

Below is what you will need to know before you can begin installation:

- Conveyor Specifications
    - Conveyor type: Belt, tilt-tray, cross belt, other?
    - What is the conveyor width?
    - What is the conveyor speed?
    - Does conveyor speed vary or is it constant?
- Product Specifications
    - Are the packages being transported always singulated (not touching) or non-singulated (possibly touching)?
    - How many different product sizes may be involved?
    - Are products justified: toward/away from reader, centered, or variable?
- Application Specifications
    - How will the barcode information be used in your application?
    - What are your communication requirements?

While it is nearly impossible to cover all application configurations, the next several pages provide the basics on determining how to mechanically install your BCL 900i. If you need additional assistance, feel free to contact your sales representative or customer service (www.leuze.de).

2.5 INSTALLATION

2.5.1 Dimensions and Clearances

The overall dimensions of the BCL 900i are 216 x 96 x 127 mm [8.5 x 3.8 x 5 in].

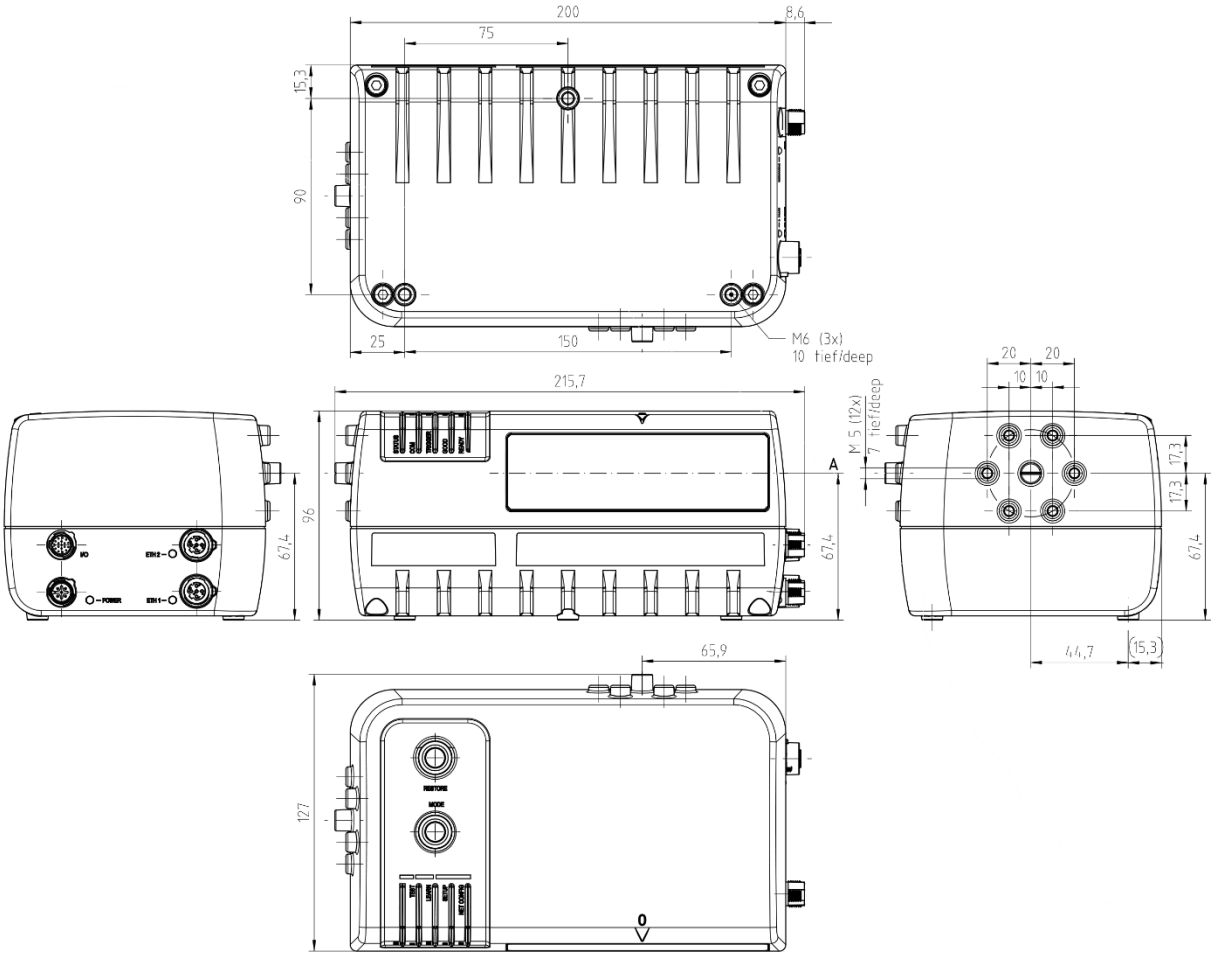

IMPORTANT: The BCL 900i is a sealed, unventilated unit. Mounting the unit with 300 mm [12”] of clearance (front, top, and sides) is recommended for cooling and ease of maintenance.

2.5.2 Physical Support Requirements

For details on the weight of the barcode scanners, *see Chapter 8, Technical Features.* Multiple-head systems may include further details on the physical support requirements with any application-specific documentation provided.

2.5.3 Vibration Limitations

See Chapter 8, Technical Features.

2.5.4 General Mounting Guidelines

It is important that you follow these general precautions when installing, setting up, operating, maintaining, troubleshooting, or replacing any Leuze electronic products, parts or related equipment.

As you plan and install your BCL 900i barcode scanning system application, be sure to keep the following guidelines in mind:

- All mounting structure assembly and equipment installation can be performed by one installer.
- Determine the proper orientation and position of the barcode scanner.
- Leave adequate clearances (approximately 300 mm [12 inches]) for wiring.
- Route wires carefully to reduce or minimize electrical noise. When power and communication wiring must cross, make their intersection perpendicular.
- Proper grounding limits the effects of noise due to Electromagnetic Interference (EMI).

2.5.5 Mounting Structure Considerations

Your first task is to mount your BCL 900i barcode scanner.

Your mounting structure must provide the following capabilities:

- It is adjustable enough for you to move your unit to the optimum position for proper scanning.
- It allows a technician access to the barcode scanner while it is mounted.
- It must be as vibration free as possible so as not to affect the scanning accuracy.
- It is constructed of steel or aluminum.
- It provides approximately 300 mm [12 inches] minimum clearance on all sides. This clearance is necessary to provide proper ventilation, allow access to all panels of the barcode scanner, and allow room for proper servicing.

2.5.6 Mounting the Scanner

The BCL 900i can be installed to operate in any position. There are 12 screw holes (M6 X 8) on the sides of the scanner for mounting. The diagram below can be used for installation; refer to reading diagrams *(See 5.10)* and any application drawings for correct positioning of the scanner with respect to the reading zone and scanner orientation.

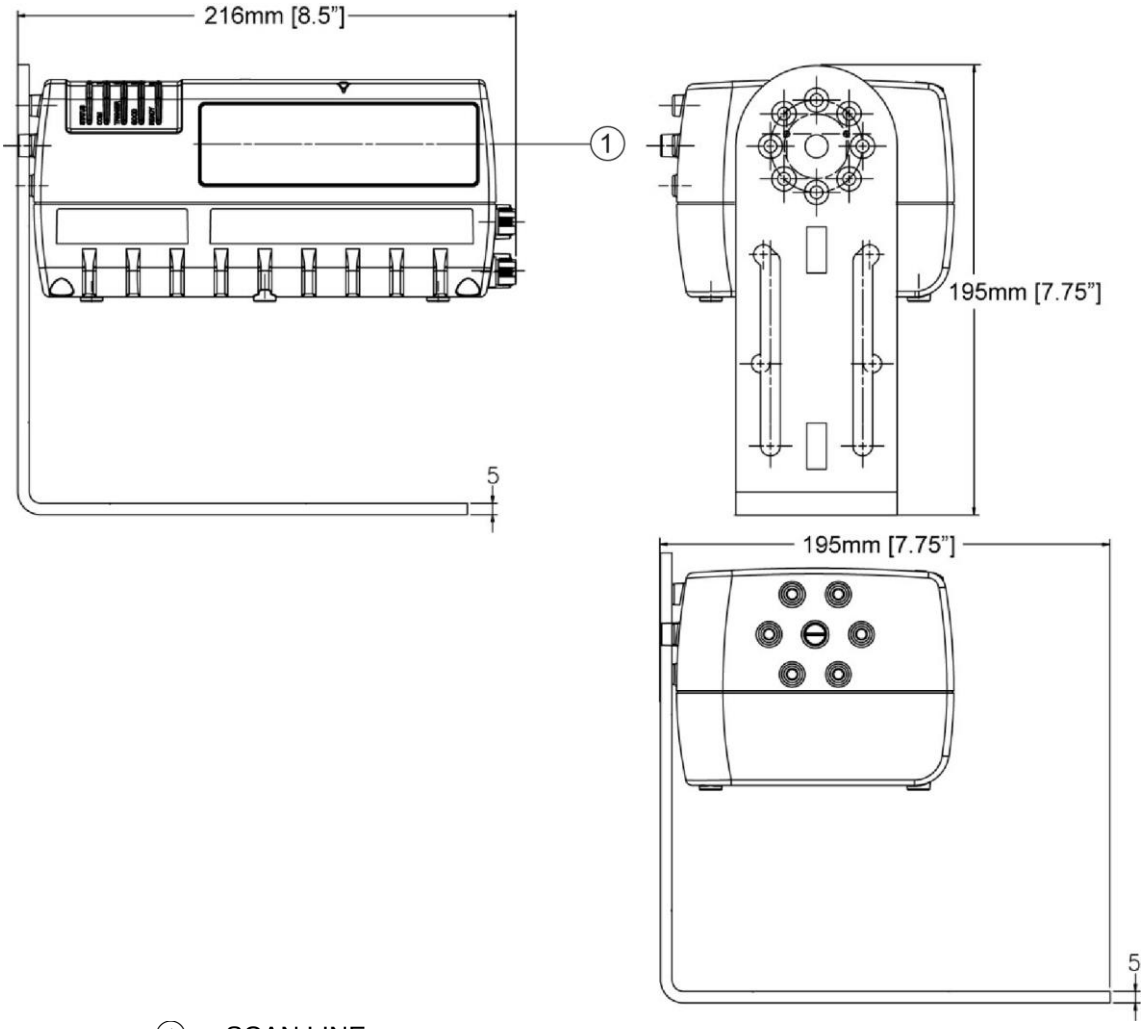

① SCAN LINE

Figure 8: BCL 900i mounting dimensions with BT 900

The BT 900 included with the BCL 900i scanner allows it to be installed in the most suitable position for your application. The BT 900 is mounted to the scanner as shown below:

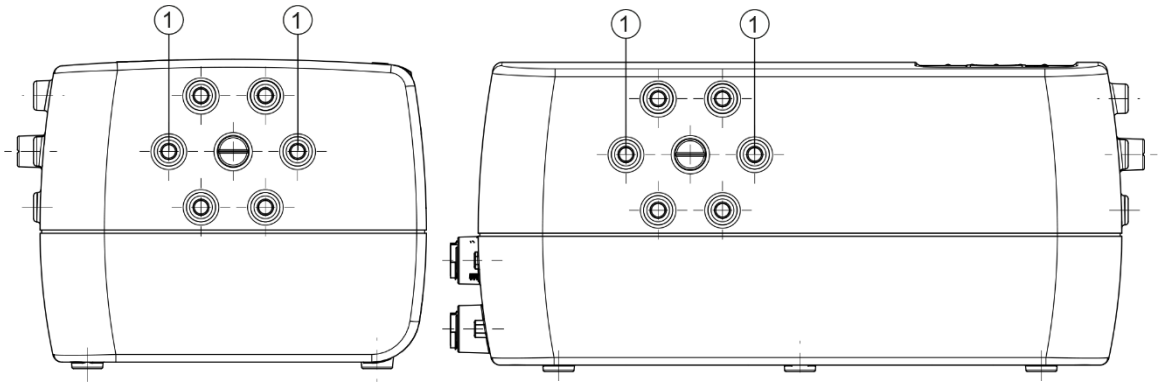

1 Mounting position

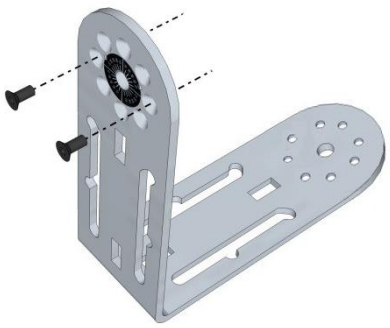

Figure 9: BCL 900i BT 900 assembly with countersunk screws

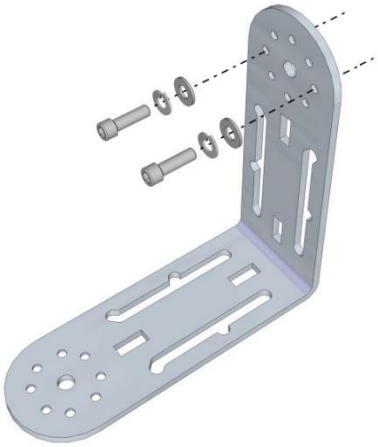

Figure 10: BCL 900i BT 900 assembly with cap screws, lock washers, and flat washers

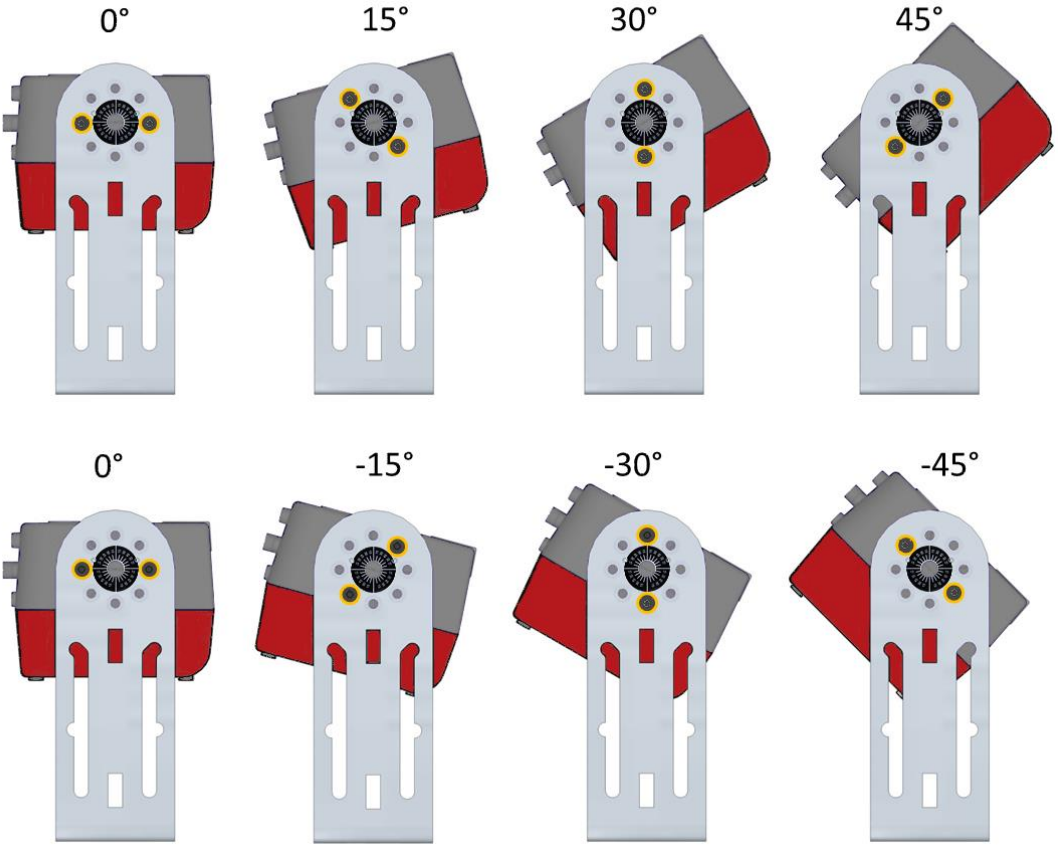

Figure 11: BCL 900i mounting angles

If the BCL 900i needs to be mounted at a 5-degree angle or within 5-degrees of the angles shown in ***Figure 11: BCL 900i mounting angles*** (+/- 5, +/-25, or +/-35-degrees)**,** mount it to the opposite end of the BT 900 as shown below:

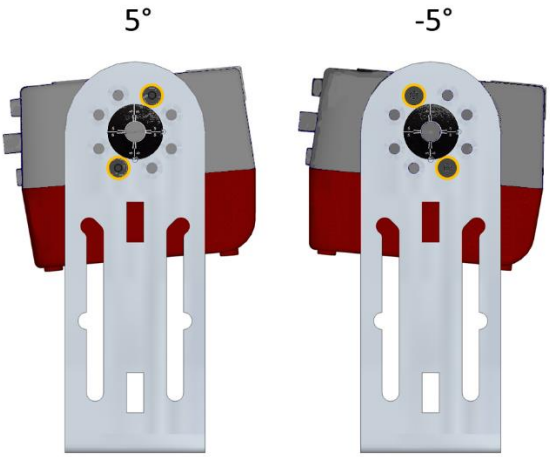

Figure 12: BCL 900i 5-degree mounting option

2.5.7 Positioning the Scanners

The BCL 900i barcode scanners are able to decode barcode labels at a variety of angles; however significant angular distortion may degrade reading performance.

When mounting the scanners, take into consideration these three ideal label position angles: Pitch 0°, Skew 0° to 45° and Tilt 0°.

Follow the suggestions for the best orientation:

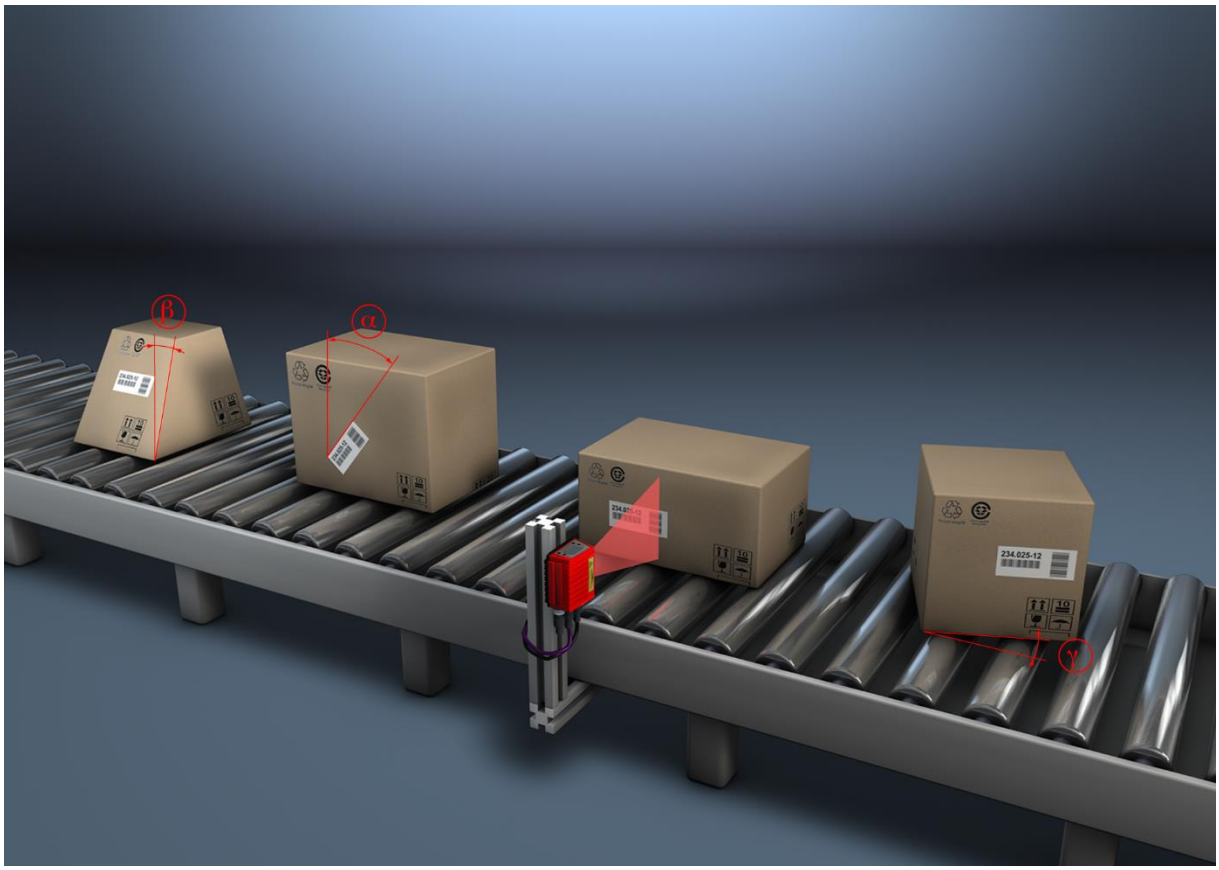

α Tilt
β Pitch
γ Skew

Figure 13: Tilt, Pitch, and Skew

3 ELECTRICAL INSTALLATION

WARNING: Electrical Installation by Qualified Service Technicians Only! Procedures may involve exposure to high-voltage. A trained and authorized technician must perform these procedures. Do not attempt to perform any electrical installation procedures unless you are a trained technician.

IMPORTANT: The BCL 900i barcode scanners contain electronics that may be affected by electrostatic discharge (ESD). To prevent personal injury or damage to the unit, please follow the safety precautions and warnings found in the References section at the beginning of this manual. Failure to follow these precautions may void your warranty.

3.1 PREPARING FOR ELECTRICAL INSTALLATION

Before mounting any components, please do the following:

- Read all instructions before beginning your installation.
- Observe all electrical safety requirements discussed in the Introduction to this manual.
- Define and confirm the accuracy of your application's requirements.
- Review all installation-specific drawings.
- Review and plan the power requirements for your application.
- Review and plan the communications requirements for your application.

IMPORTANT: The content of this manual may be superseded by any customer-specific documentation provided by Leuze electronic. Before proceeding with any installation procedures, be sure to review ALL documentation, especially content that contains details specific to your installation.

NOTE: Everything should be MECHANICALLY INSTALLED before performing any ELECTRICAL INSTALLATION. See Chapter 2 for mechanical installation details.

Most BCL 900i applications are shipped with the MA Connection Box and all the necessary cabling required to electrically install the system. If your system requires custom-length cables or other special wiring, documentation specific to these requirements has been provided in your shipment. This special documentation supersedes any contradictory content in this manual.

NOTE: To reduce the possibility of damage to the unit, check all cabling between the scanner and other devices for accuracy.

3.2 CONNECTING A BCL 900i SCANNER

To install a BCL 900i barcode scanner, follow this sequence:

- Complete mechanical installation *(See Chapter 2.)*
- Complete electrical installation *(See wiring illustrations provided in this chapter.)*
- Observe all electrical safety requirements outlined in this chapter.
- Ground the mounting structure to protective earth (PE) ground.
- If used, wire the photoelectric sensor (or other trigger) to the MA 900 Connection Box/MSC 900.
- Wire the tachometer to the MA 900 Connection Box/MSC 900 (if used).
- Wire serial ports to the MA 900 Connection Box/MSC 900 if needed.
- Connect the M12 end of the Ethernet cable to the scanner's HOST port and network switch as required by your application.
- Connect the scanner to its power supply.
- Connect the power supply to the power source.
- Setup / check scanner operations *(See Chapter 5.)*

3.3 TYPICAL CONNECTION BLOCK DIAGRAMS

3.3.1 Single BCL 900i Barcode Scanner to MA 900

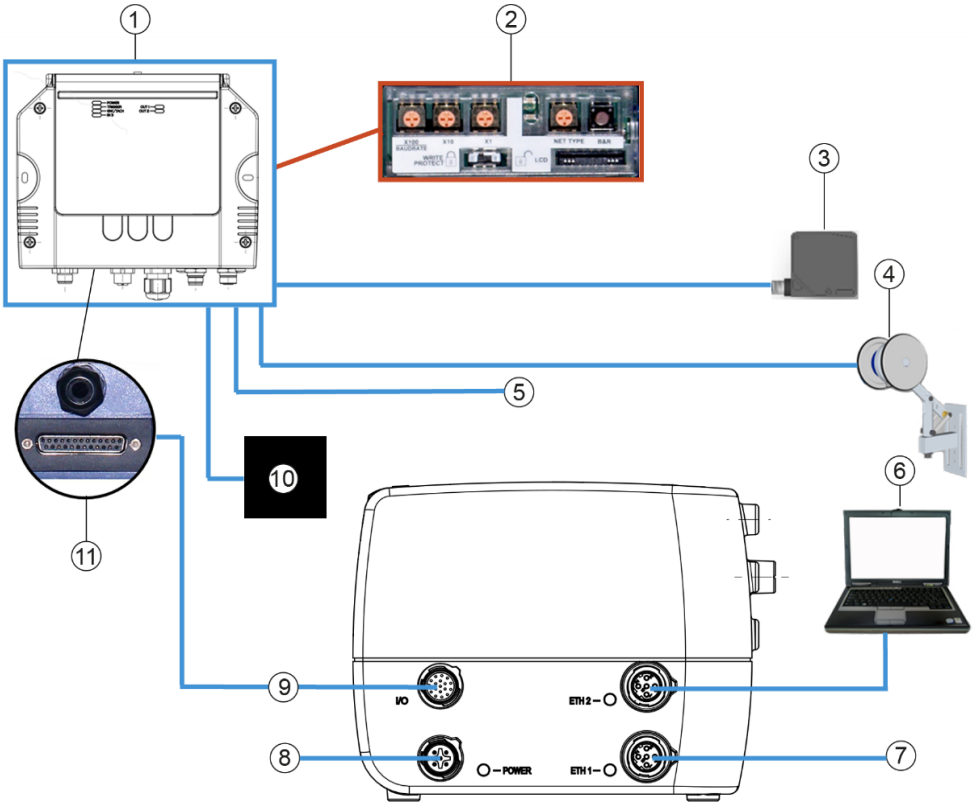

1. MA 900
2. Backup Module
3. Photoelectric sensor
4. Enoder/Tachometer
5. Digital Output(s)
6. Setup PC
7. Host
8. PWR
9. 17 Pin M12 Connector
10. RS232 or RS422FD Host
11. 25 Pin D-Connector

Figure 14: Single BCL 900i to MA 900

3.3.2 Master/Slave Array with MA 900

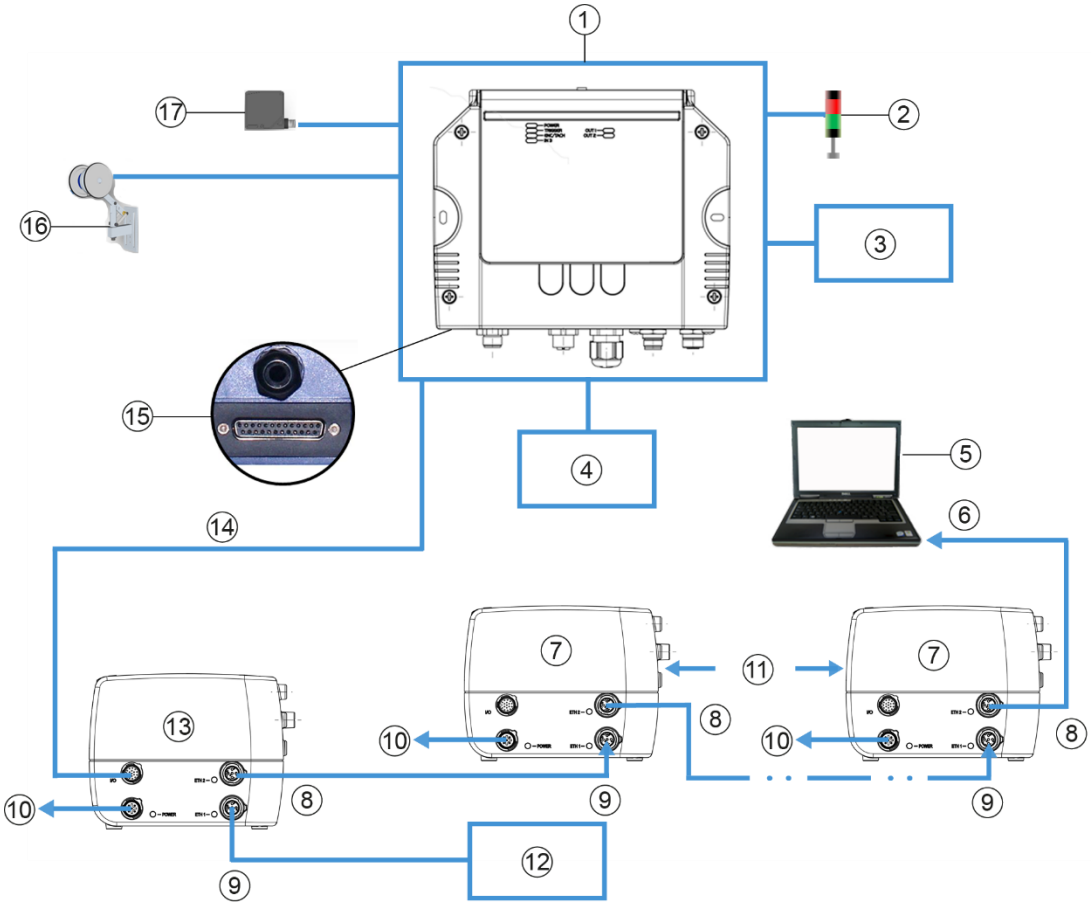

1. MA 900
2. Stack Light or Diverter
3. Host (Serial)
4. Host (Fieldbus)
5. Setup PC
6. Ethernet
7. Slave
8. ETH2
9. ETH1
10. PWR
11. Up to 32 Scanners
12. Host (Ethernet)
13. Master
14. 17 Pin M12 to 25 Pin D
15. 25 Pin D-Connector
16. Encoder/Tachometer
17. Photoelectric Sensor

Figure 15: Master/Slave Array (Tunnel) with MA 900

3.3.3 BCL 900i Barcode Scanners in an Array with MSC 900 Master

In an array (tunnel) using the MSC 900 Controller, the chain of scanners completes a circle from and to the MSC 900 Controller via ETH1 and ETH2. In this scenario, if one scanner fails, communication from the other scanners to the MSC 900 Controller is not interrupted.

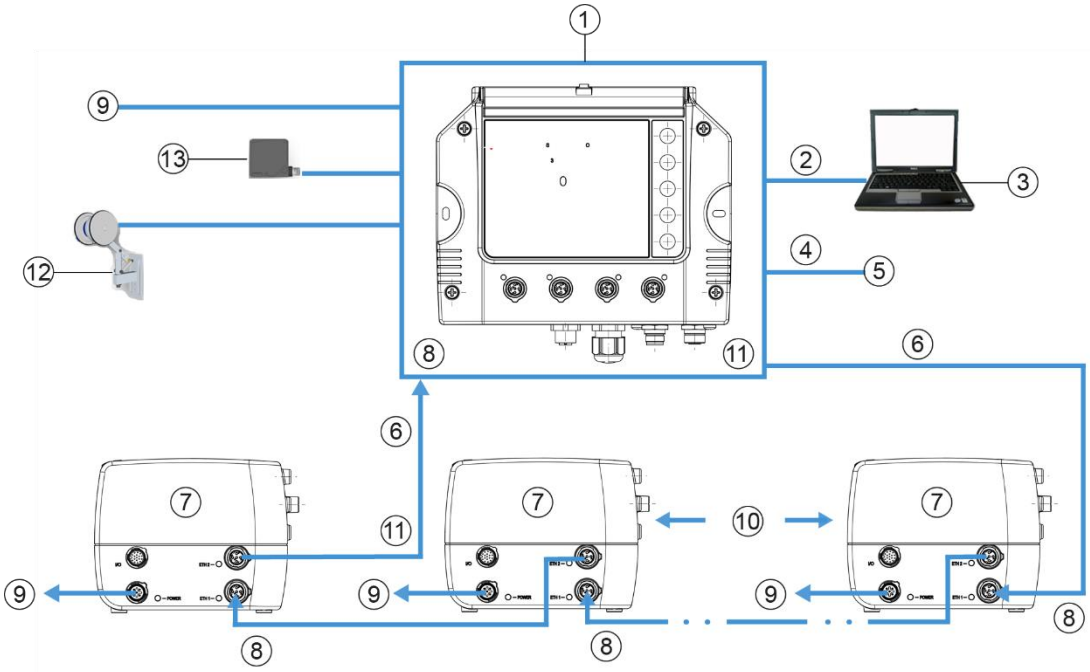

1. Master MSC 900 Controller
2. Ethernet CFG
3. Setup PC
4. Ethernet HOST
5. Host (Ethernet)
6. EBC (Internal Scanner Network)
7. Slave
8. ETH1
9. PWR
10. Up to 31 Scanners
11. ETH2
12. Encoder/Tachometer
13. Photoelectric Sensor

Figure 16: BCL 900i Array (Tunnel) with MSC 900

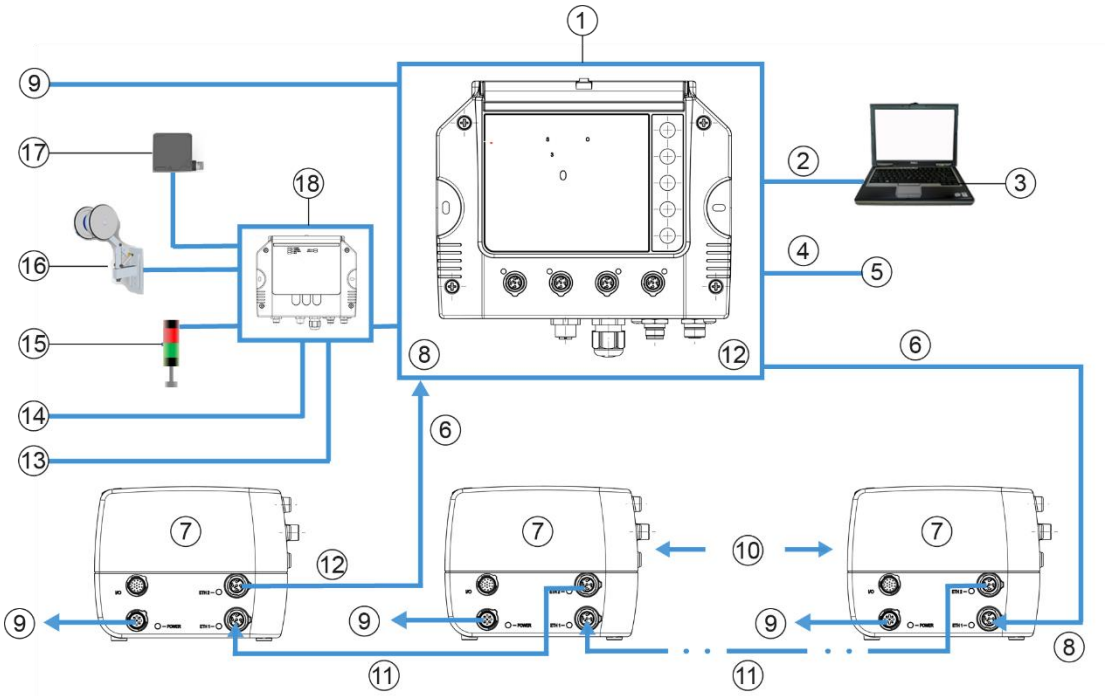

1. Master MSC 900 Controller
2. Ethernet CFG
3. Setup PC
4. Ethernet HOST
5. Host (Ethernet)
6. EBC
7. Slave
8. ETH1
9. PWR
10. Up to 31 Scanners
11. Ethernet
12. ETH2
13. Host (Fieldbus)
14. Host (Serial)
15. Stack Light or Diverter
16. Encoder/Tachometer
17. Photoelectric Sensor
18. MA 900

Figure 17: BCL 900i Array (Tunnel) to MSC 900 (alternate with MA 900)

3.4 GENERAL ELECTRICAL INSTALLAION GUIDELINES AND PRECAUTIONS

It is important that you follow these general precautions when installing, setting up, operating, maintaining, troubleshooting or replacing any Leuze electronic products, parts or related equipment.
As you plan and install your scanner(s), be sure to keep the following guidelines in mind:

- Determine the scanner is in the proper location as outlined in Chapter 2.
- Leave adequate clearances (approximately 300 mm [12 inches]) for wiring.
- Route wires carefully to reduce or minimize electrical noise.

IMPORTANT: When planning your installation wiring, remember all power connections must be quick-disconnect. For PERMANENTLY CONNECTED EQUIPMENT a readily accessible disconnect device must be incorporated in the building installation wiring. For PLUGGABLE EQUIPMENT the socket-outlet must be installed near the equipment and must be easily accessible

WARNING: To assure no ESD damage will occur, be sure to observe the precautions outlined in the Introduction to this manual.

IMPORTANT: Ground the mounting structure to safety ground (protective earth ground (PE)). See wiring recommendations for safety ground.

3.5 BCL 900i CONNECTOR PANELS

After completing mechanical installation, use this section to properly wire your scanners for optimal performance in your application. BCL 900i wiring connections are made to the connector panel and through the MA Connection Box (connected to the I/O port of the scanner). In most applications, the cable connections to the scanner will include:

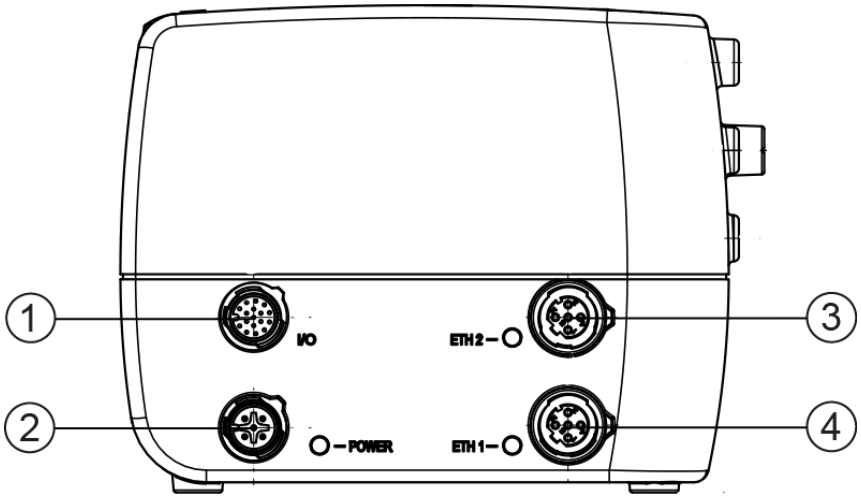

1. I/O (Connects directly to the 25-pin D type connector on the MA Connection Box)
2. POWER
3. ETH 2 (Setup or EBC scanner network)
4. ETH 1 (Host or EBC scanner network)

Figure 18: BCL 900i Connector Panel

Route wiring from the scanner's connector panel through the wiring channels (if available) on the Leuze electronic mounting structure when interconnecting cables to other devices.

3.6 CONNECTING A PC TO THE BCL 900I

During initial setup, a PC (laptop) may be connected to the BCL 900i with a M12 to RJ45 cable. Screw the M12 connector to the ETH 2 port of the scanner and plug the RJ45 into the Ethernet port of your PC. If the ETH 2 port is in use, ETH 1 port can be used. For information on connect to the User Interface, *see Chapter 4.*

NOTE: ETH2 is the **Setup** port, **ETH1** is the **HOST** port.

NOTE: A laptop can only communicate to a scanner that is connected to a MA Connection Box or MSC 900 Controller.

NOTE: Parameters for tunnel are set up in MASTER scanner (or MSC 900 Controller) only.

3.7 POWER CONNECTOR PIN-OUT TABLE

A recommended power supply and cabling is available with the BCL 900i (and MSC 900 Controller). However, if your installation requires custom power supply wiring, the pin-outs of the unit power connector are provided below for your convenience.

24V - - - 4A MAX		POWER Input	
		Unit Connector (shown)	Mating cable connector
		5-PIN M12-TYPE MALE	5-PIN M12-TYPE FEMALE
MALE 5-PIN M12-TYPE 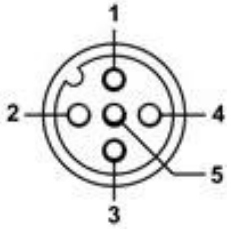	Pin	Function	
	1	+24 VDC	
	2	n/c	
	3	dc return	
	4	n/c	
	5	protective earth (chassis)	

NOTE: When using a BCL 900i barcode scanner, no power supply is required for the MA 900 Connection Box. All power and some communication options are fed to the MA 900 through the scanner's 17-pin I/O connector to the MA 900 25-pin connector using the cable provided.

3.8 POWER CONNECTIONS

IMPORTANT: When planning your installation wiring, remember all power connections must be quick-disconnect.

CAUTION: While performing the following wiring connection procedures, be sure to follow all safety procedures regarding high-voltage as outlined in the Introduction to this manual. No power should be applied to any device until all wiring is completed and checked for accuracy.

IMPORTANT: The socket-outlet must be installed near the scanner. The outlet must be a readily accessible disconnect device.

GROUND: Ground the scanner to safety ground (protective earth ground (PE)). See wiring recommendations for safety ground.

The MA Connection Boxes provide flexible connectivity to a range of I/O devices as well as serial hosting. The BCL 900i connects to the MA via its I/O port using a single 17-pin M12 to 25-pin D cable. The MA Connection Box also provides space for an optional Backup Module (recommended) for parameter storage, allowing quick replacement and configuration of the scanners.

In a system with multiple scanners and other devices required in a scanning array (tunnel), an MSC 900 Controller serves as the system Master and provides communications between devices and to the Host. Complete installation information for the MSC 900 Controller is available in the ***MSC 900 System Controller Reference Manual*** available at www.leuze.de.

3.9 MA 900 CONNECTION BOX

Complete installation information for the connection box is available in the ***MA 900 Installation Manual*** available at www.leuze.de. A simple drawing of the interior of the box is shown below.

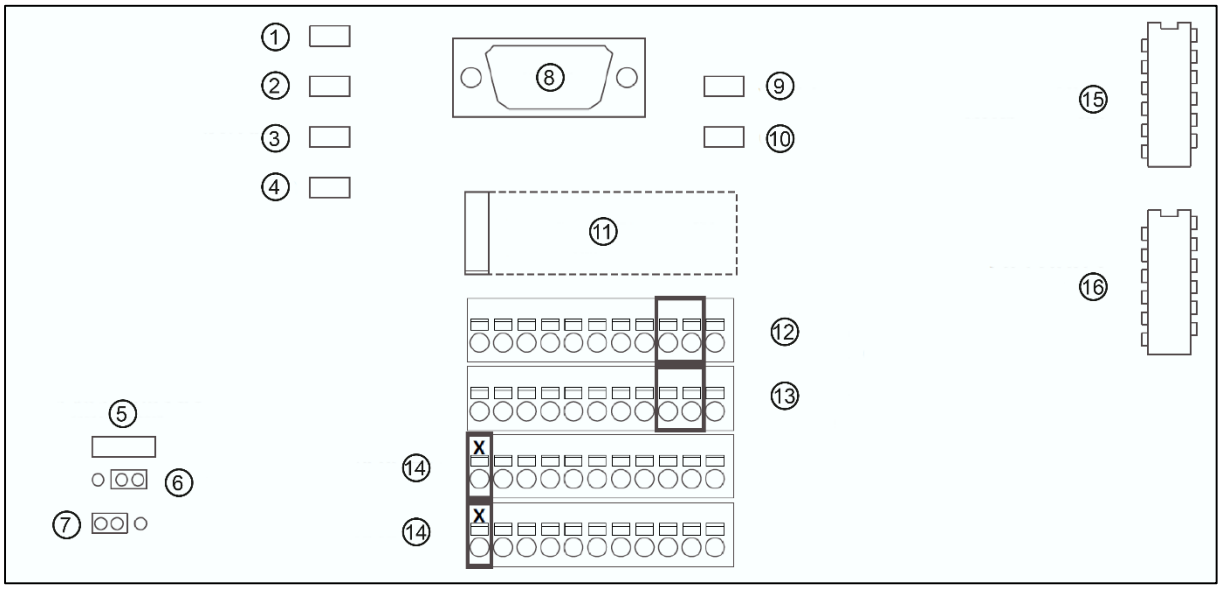

1. POWER
2. TRIGGER
3. ENC/TACH
4. IN3
5. DEVICE CHASSIS GROUNDING
6. Earth
7. GND
8. AUX
9. OUT1
10. OUT2
11. BACKUP/RESTORE MODULE
12. IO4 +/- RESERVED FOR MSC 900
13. O3 +/- RESERVED FOR MSC 900
14. RESERVED
15. FIELDBUS BOARD IP65
16. FIELDBUS BOARD STD

Figure 19: MA 900 Interior

3.9.1 Wiring Into the MA 900 Connection Box

WARNING: DO NOT connect a separate power source to the MA 900 Connection Box. The MA 900 receives its power through its connection to the BCL 900i Barcode Scanner. Connecting a separate power source will be detrimental to the system operation.

IMPORTANT: DISCONNECT POWER from the scanning system and MA 900 before wiring any components.

Loose-lead cables must pass through the water-tight seals in the base of the MA 900 Connection Box. Insert the cables allowing enough slack for the individual wires to reach the appropriate pin block connectors. Securely tighten the water-tight seals after the cables have been inserted.

Insulation on individual wires should be removed to expose 13 mm [0.5 inch] of bare metal before inserting into the pin block.

3.10 PHOTOELECTRIC SENSOR CONNECTIONS TO MA 900

Barcode scanning applications may use a Leuze electronic photoelectric sensor as a trigger device. The photoelectric sensor is wired directly into the MA 900 terminal.

If your application uses a trigger other than the one specified by Leuze electronic, follow the appropriate wiring diagram to assure proper wiring.

NOTE: To confirm the photoelectric sensor is functioning properly, watch the TRIG LED while the photoelectric sensor's beam is blocked. The Leuze electronic photoelectric sensor also includes a status LED.

The following diagrams illustrate standard recommended wiring of the Photoelectric Sensor to the MA 900 terminal block.

3.10.1 Photoelectric Sensor (NPN)

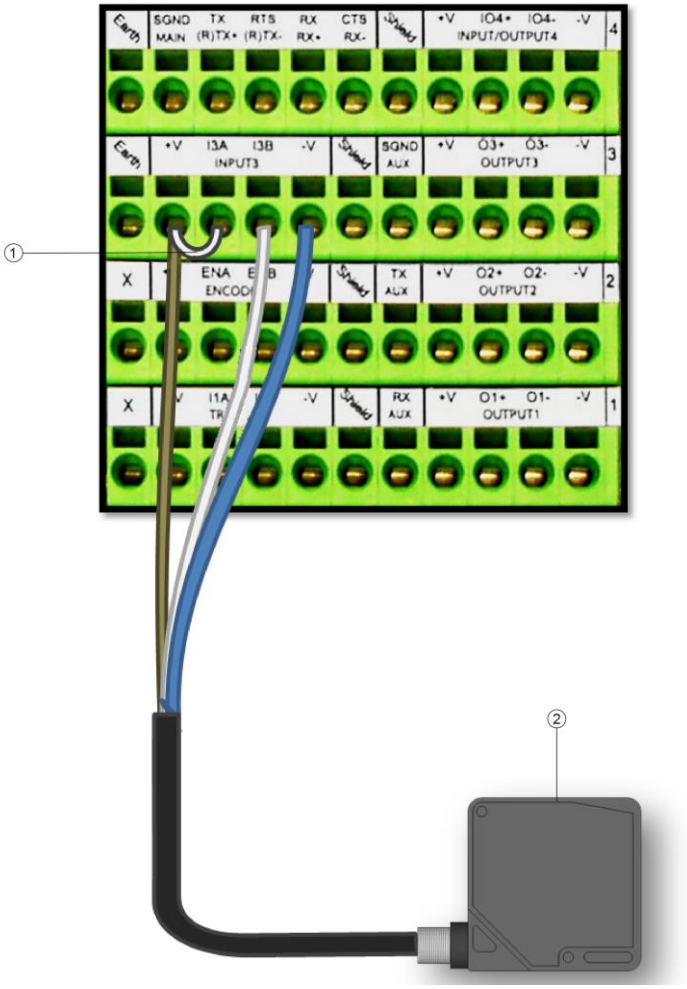

① Jumper
② Photoelectric Sensor

Figure 20: Photoelectric Sensor Wiring (NPN Output)

3.10.2 Photoelectric Sensor (PNP)

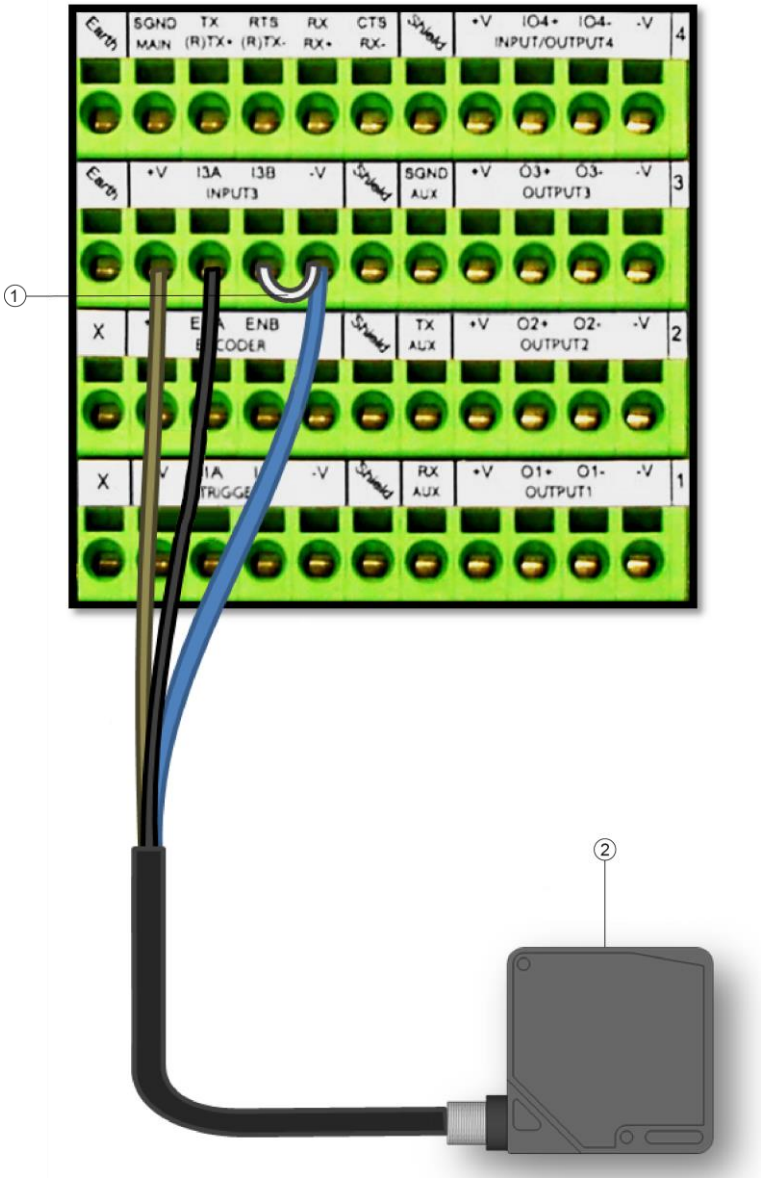

① Jumper
② Photoelectric Sensor

Figure 21: Photoelectric Sensor Wiring (PNP Output)

3.11 TACHOMETER WIRING TO MA 900

Omni applications over a conveyor belt use an accessory tachometer and mounting kit. The following diagrams illustrate standard recommended wiring of an encoder to the MA 900 terminal block.

3.11.1 Encoder/Tachometer Wiring for NPN Output (two models)

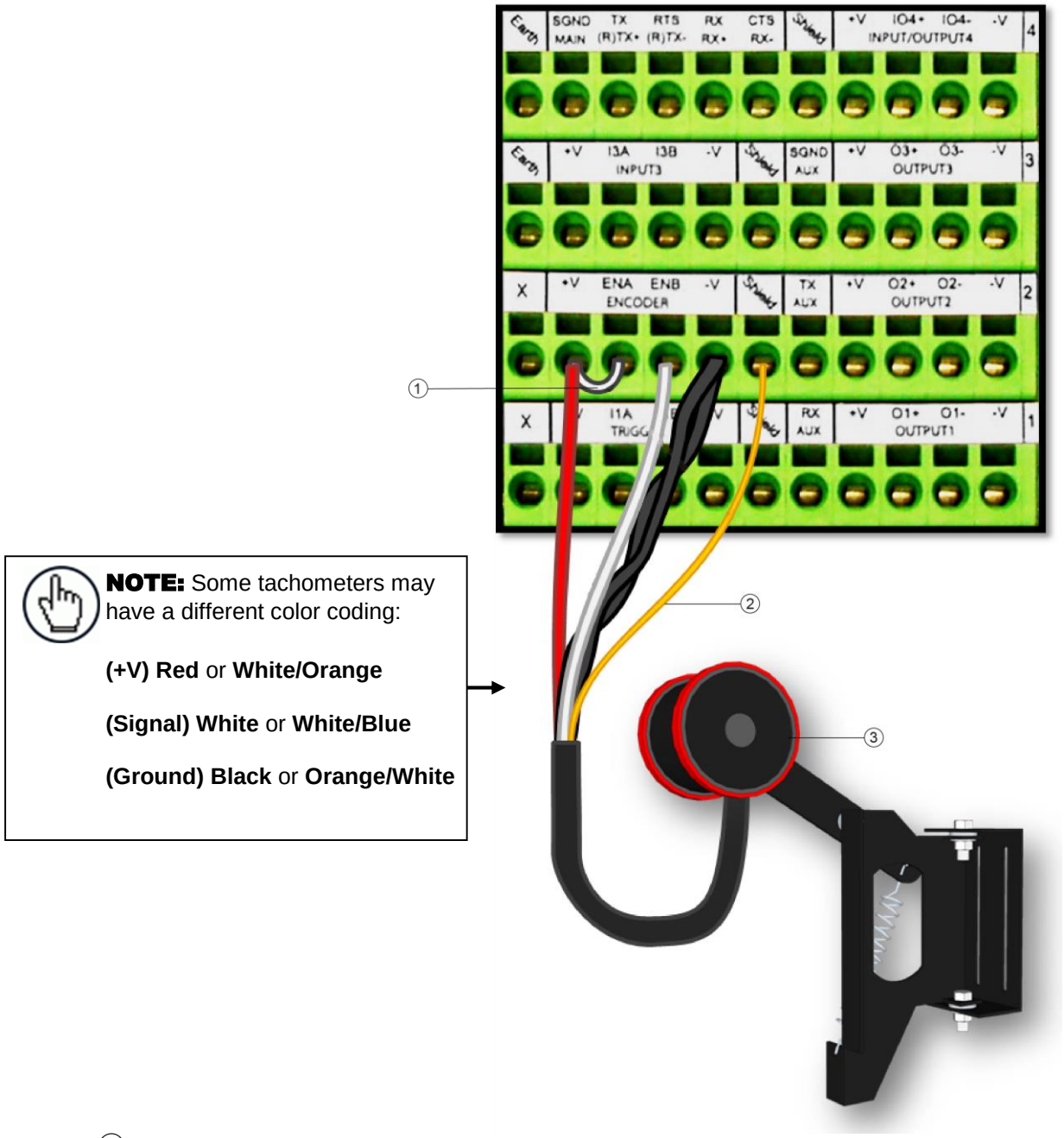

① Jumper
② Bare (Shield)
③ Encoder/Tachometer

Figure 22: Encoder/Tachometer Wiring (NPN Output)

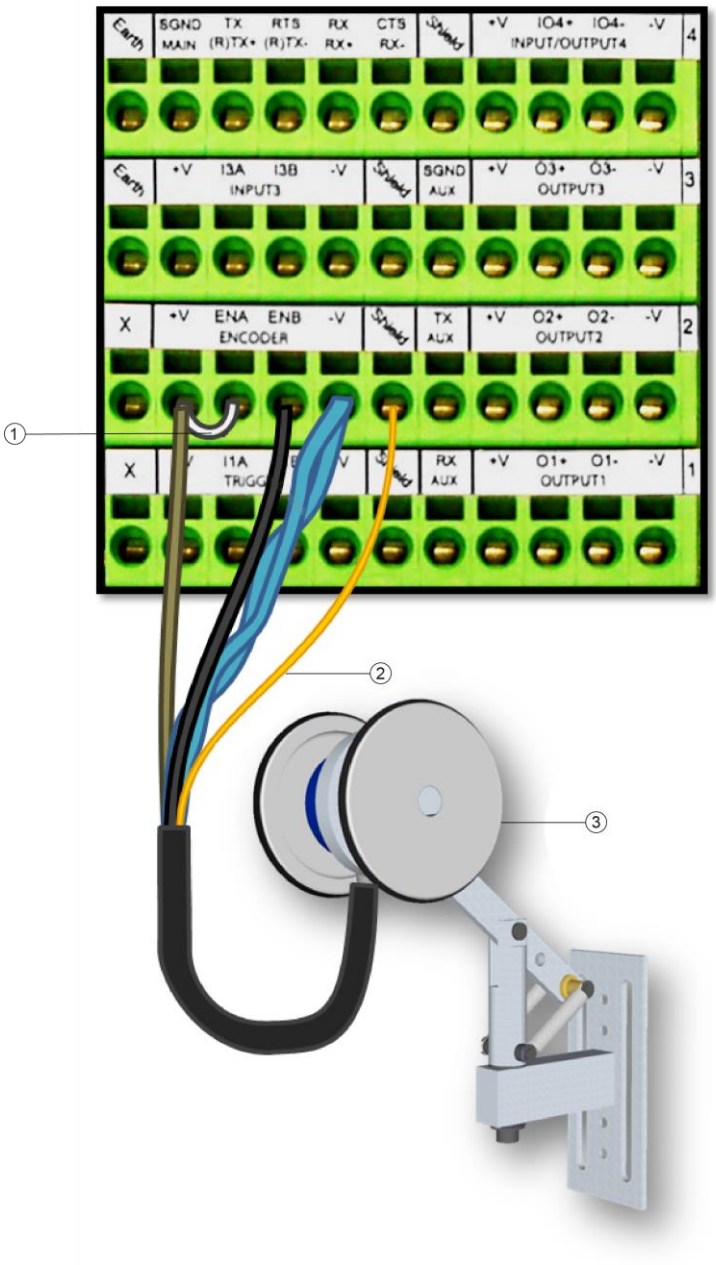

1. Jumper
2. Bare (Shield)
3. Encoder/Tachometer

Figure 23: Encoder/Tachometer Wiring (NPN Output)

3.11.2 Encoder/Tachometer Wiring for PNP Output (two models)

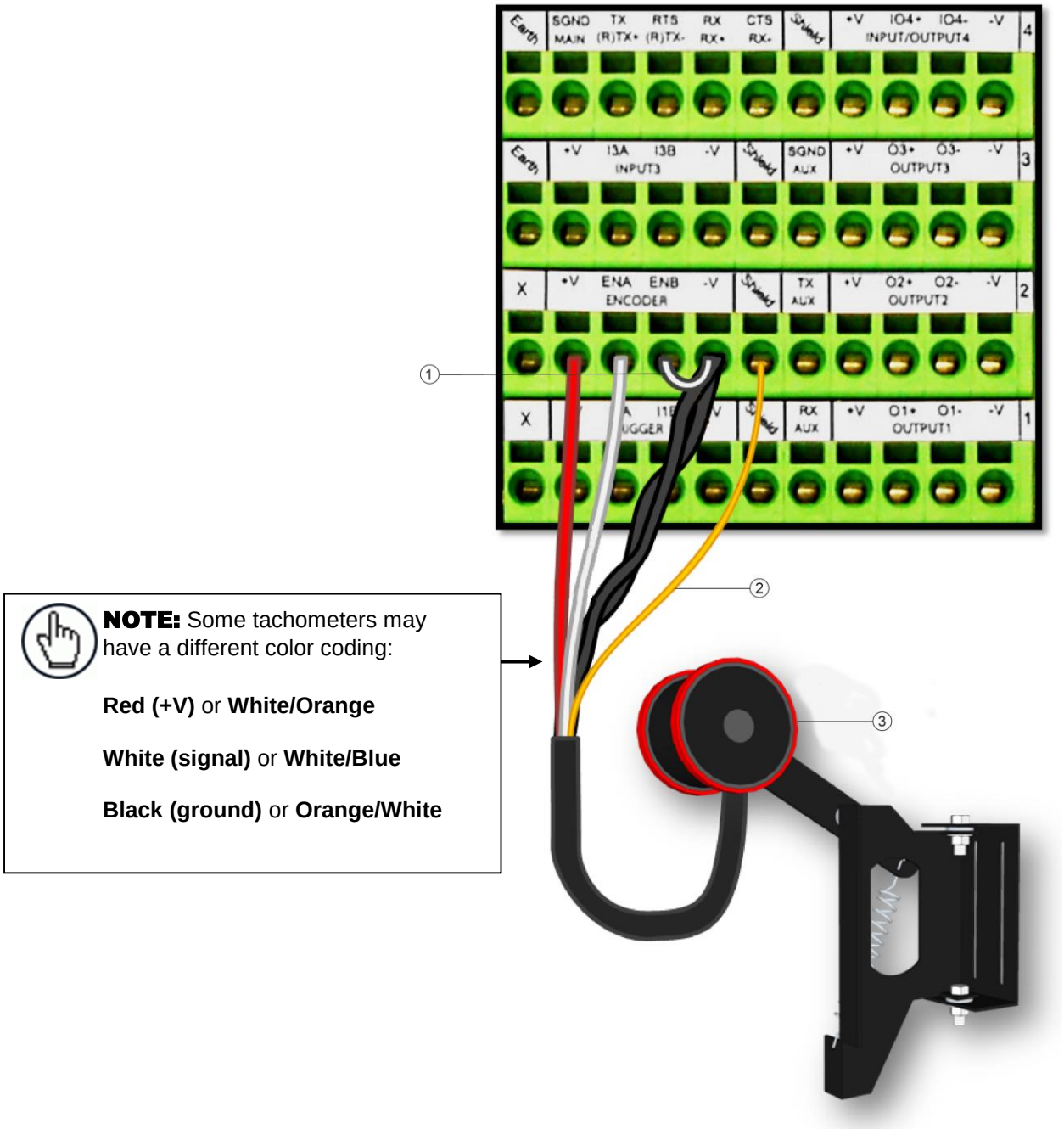

1. Jumper
2. Bare (Shield)
3. Encoder/Tachometer

Figure 24: Encoder/Tachometer Wiring (PNP Output)

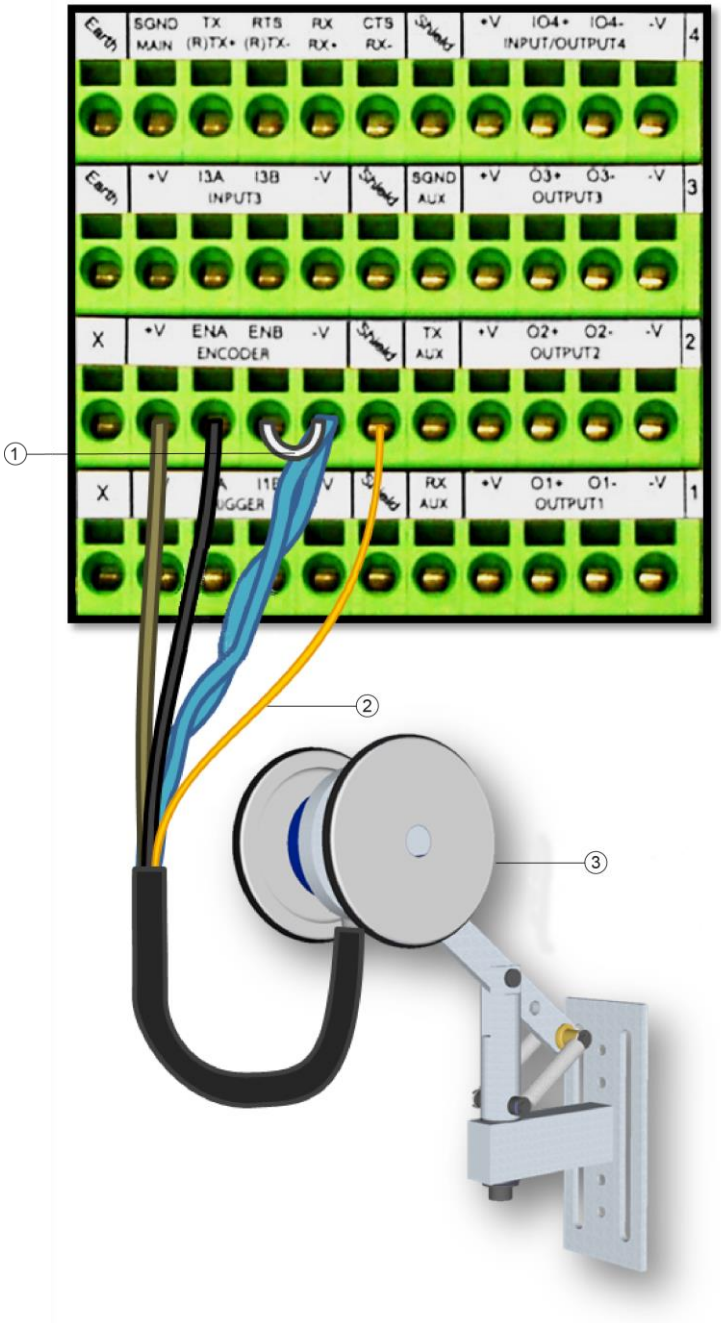

① Jumper
② Bare (Shield)
③ Encoder/Tachometer

Figure 25: Encoder/Tachometer Wiring (PNP Output)

3.12 DIGITAL OUTPUT CONFIGURATION TO MA 900

The MA 900 includes an OUTPUTS block for wiring relays as needed for external accessories. The User Interface **Modify Settings | Digital I/O** window includes options for outputs 1 and 2 with **Primary** and **Secondary Activation Event** options including **Complete Read, Partial Read, No Read, Trigger On, Trigger Off, Multiple Read, Right/Match,** and **Wrong/No Match**.

Schematics for Isolated and Non-Isolated digital outputs are provided below.

Outputs 1 - 3
Maximum Voltage 30 V
Collector Current (pulse) 130 mA Max.
Collector Current (continuous) 40 mA Max.
Saturation Voltage (VCE) 1 V at 10 mA Max.
Maximum Power Dissipation 90 mW at 50°C (Ambient temperature)

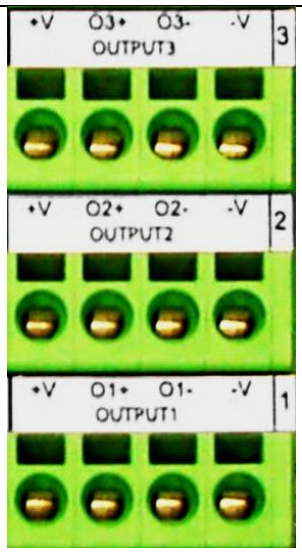

Figure 26: OUTPUTS Block

3.12.1 Unpowered Outputs

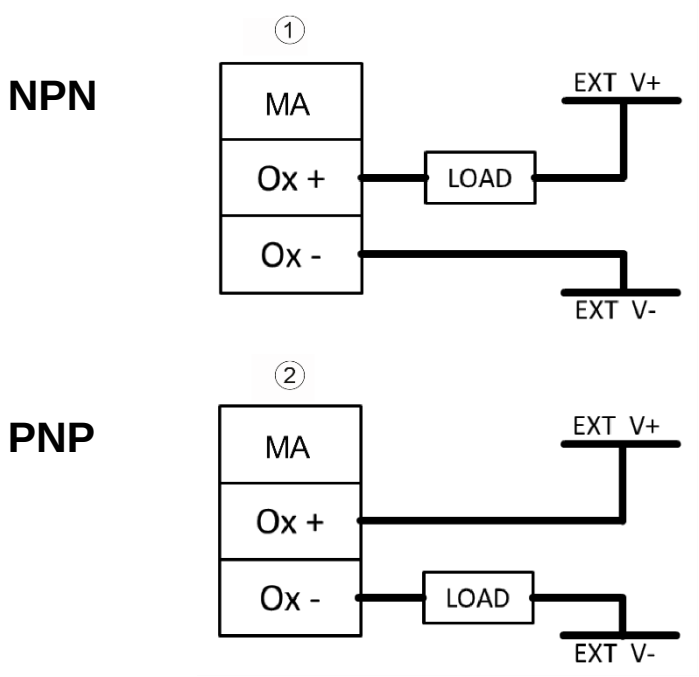

1 Sink
2 Source

Figure 27: Unpowered Outputs

3.12.2 Powered Outputs

NPN

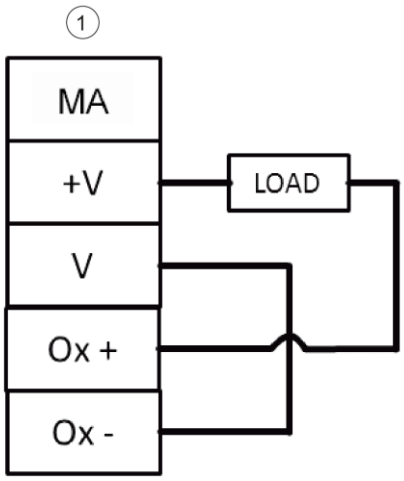

PNP

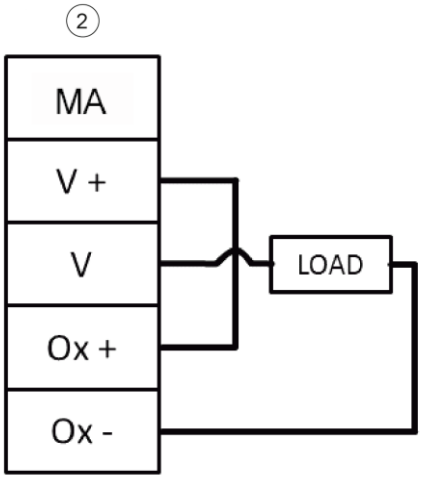

1 Sink
2 Source

Figure 28: Powered Outputs

3.13 CONNECTING TO THE MSC 900 SYSTEM CONTROLLER (OPTIONAL)

In larger scanning arrays (scanning tunnels), an MSC 900 controller can act as the system master and support up to 31 slave BCL 900i barcode scanners in an Ethernet-based connection loop (EBC). MSC 900 wiring connections are made to the front and bottom connector panels. In most applications, the cable connections to the scanner will include:

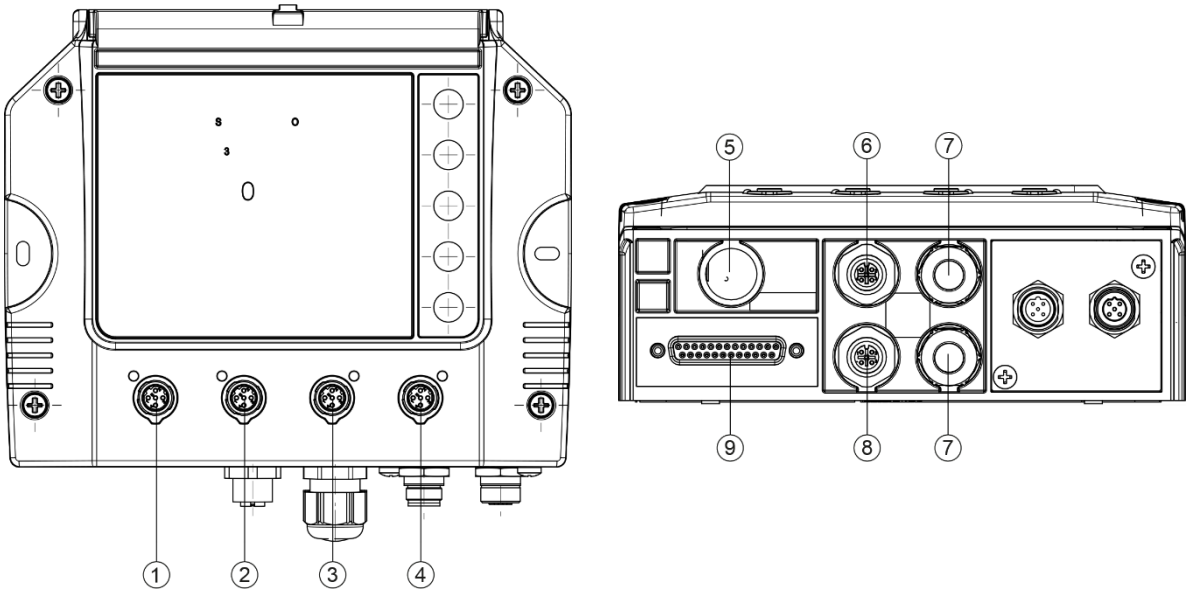

1. CFG (Configuration via laptop Ethernet cable)
2. HOST
3. ETH 1 (EBC scanner network)
4. ETH 2 (EBC scanner network)
5. POWER
6. ENC (PNP Encoder/Tachometer)
7. Water-tight connectors
8. TRG (PNP Trigger/Photoelectric Sensor)
9. I/O (Connects directly to the 25-pin D type connector on the MA Connection Box)

Figure 29: MSC 900 Bottom Panel Connectors

Complete installation information for the MSC 900 Controller is available in the ***MSC 900 System Controller Reference Manual*** available at www.leuze.de.

3.14 CHECK SCANNER INSTALLATION

After completing the installation of your barcode scanner, confirm that the barcode scanners, MA Connection Box and/or MSC 900 Controller have been properly installed mechanically and electrically. Use the Installation Sequence at the beginning of this chapter and your application specifications to check your installation.

4 USER INTERFACE

4.1 GETTING STARTED

The **BCL 900i** barcode scanners are designed for ease-of-setup. The **BCL 900i User Interface** is a browser-based application you will use to define operating parameters, monitor read quality, construct output messages, and view diagnostics. The User Interface enables you to easily configure, fine-tune, and monitor your scanner's operation.

This User Interface provides ease-of-use for any operator level.

4.1.1 Prerequisites

Before setting up your barcode scanner you will need the following:

Computer	Laptop
Browser	Internet Explorer 11 (or later) Firefox 30 (or later) Chrome 36 (or later)
Java	Java version 8 (or later) **NOTE:** If the Diagnostic | Monitor page does not run, you may need to create an exception in the Java Control Panel. To do this: If the Diagnostic | Monitor page does not run, you may need to create an exception in the Java Control Panel. To do this: 1. Click the **Start/Home** button and type **Configure Java** in the search field. Select the **Java Control Panel** from the search results. The **Java Control Panel** opens. 2. Click the **Security Tab** to open it. 3. Under **Exception Site List**, click **Edit Site List…** The **Exception Site List** window opens. 4. Click **Add**. 5. Enter the IP Address for the system/scanner in the field provided as follows: http://10.27.154.125/ (but matching your system's IP Address) 6. Click **OK**. The Monitor page should now load.

4.1.2 Starting the User Interface

To access the User Interface:

NOTE: Before starting up or testing the scanner, it must be connected to a **MA 900 Connection Box** (see section 3.9.1) or an **MSC 900 Controller** (see section 3.13) depending on the system configuration.

1. Connect your computer to the scanner's ETH 2 port using the KB ET-xxxx RJ45 ETHERNET CABLE or M12-TO-RJ45F. If the ETH 2 port is taken, ETH 1 can be used.

2. Turn on your computer.

3. If you are connecting to a stand-alone unit (not connected to an in-house network), you must configure your PC's IP Address to be in the same network as the scanner's (or if used, controller's) IP Address.

   To change your PC's IP Address:

   a. From the desktop, click the **Start** button, and then select **Control Panel**.

   b. Type **adapter** in the search box, and then from the results, under **Network and Sharing Center**, click **View network connections**.

   c. Right-click **Local Area Connection**, and then select **Properties**.

   d. Select the **Networking** tab. Under **This connection uses the following items**, click **Internet Protocol Version 4 (TCP/IPv4)**, and then click **Properties**.

   e. Select **Use the following IP address**.

   f. In the **IP address** field, type the first 3 octets of the IP address of the reader/controller unit.

   g. For the last octet, type a number that differs from the last octet in the reader/controller's IP address. The actual number used is not important as long as it does not match that of the reader/controller.

      Example: If the barcode scanner's IP Address is 192.168.3.100, set your PC's IP Address to 192.168.3.101.

   h. In the Subnet mask field, type 255.255.255.0

   i. In the **Default gateway** field, type 0.0.0.0

   j. Click **Okay**.

4. Open a web browser and enter the IP address for the BCL 900i. If the correct IP address is entered, the BCL 900i **Log On** window will appear.

NOTE: The default setup IP address for all **BCL 900i** units is: 192.168.3.100 (setup) and 172.27.101.220 (Host).

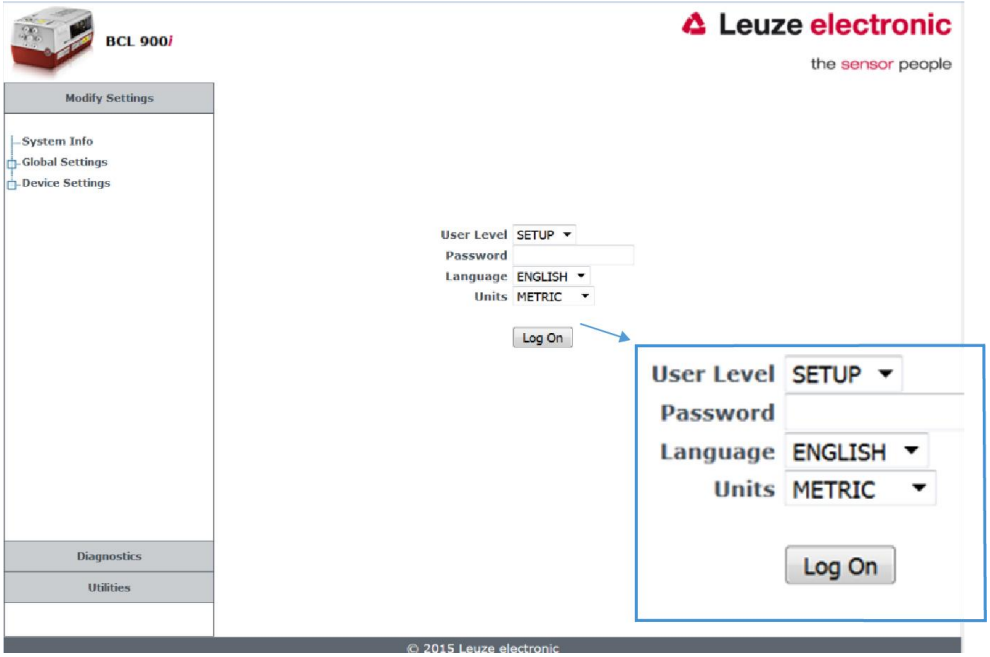

5. Enter the **Password** (default is LEUZE) for your system in the fields provided.

6. Select a language from those available in the **Language** drop-down list.

7. Select **METRIC** or **IMPERIAL** from the **Units** drop-down list.

8. Click **Log On**.

   If the password is valid, the application enables all functions available to the user and displays the **System Info** window.

   If the password is not valid, the application displays a results box with the message, **"Incorrect Password."** Click **OK** to return to the **Log On** window and enter the correct user name and password. I you don't know the password, contact your system manager.

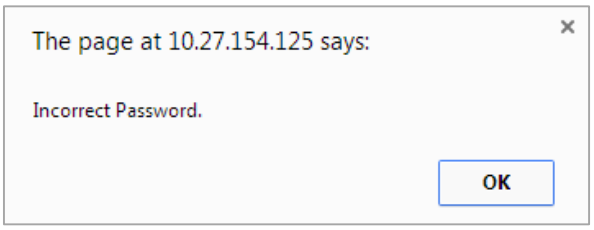

To log out of the User Interface:

Click at the upper right corner of the User Interface window to Log Out. When logged out, the Log On window will appear.

4.2 USER INTERFACE BASICS

4.2.1 BCL 900i User Interface Menu Tree

The functions that you can select are displayed in a menu tree on the left–hand side of the reader/controller User Interface. The function list is organized much like the hierarchy of a file system, where you can expand items that are preceded by a box ( ) to further sub–levels until you find a function of interest.

Sub–levels appear indented below the items from which they are expanded. Clicking the box again will collapse that branch of the menu. You can expand no further when an item is not preceded by a box.

The reader/controller User Interface menu tree appears with no items expanded. Click the folders to display the active window for the setup function and/or expand the folders to view any additional setup features.

4.2.2 Entering Text Using the Text Entry Tool

In cases where text needs to be entered to create message headers, trailer, custom messages, or for other reasons, the **Text Entry Tool** pencil icon " " will be displayed.

Click to open the **Text Entry Tool.**

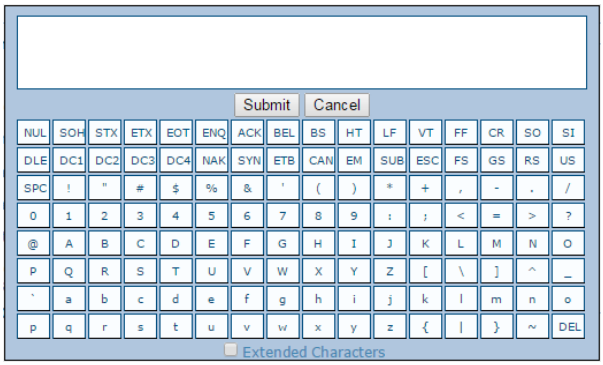

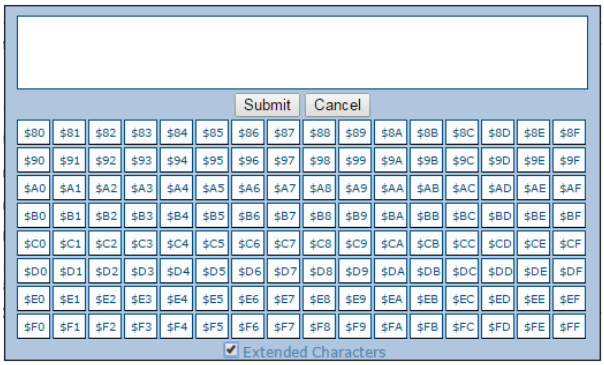

NOTE: The **Text Entry Tool** is needed to enter unprintable/untypable characters. For example, <CR> is a single character presented as a string for more easily reading.

The character must be entered with the tool, if typed normally it will be recognized as a string and not as a single character.

You can enter text in the text field by typing, or click on the character buttons to create your message. Select the **Extended Characters** check box to reveal a new set of control characters.

Click **Submit** to save your text to the origin window text field, or click **Cancel** to return to origin window without transferring text.

4.2.3 Getting Help

The complete help for the **BCL 900i User Interface** is available in this manual.

To access the complete help system:

Select **Utilities | Help** in the User Interface menu tree.

4.3 MODIFY SETTINGS

Use the Modify Settings Menu Tree selections during initial setup to configure your scanning system. If necessary, you can later make modifications to the configuration using the same menu selections.

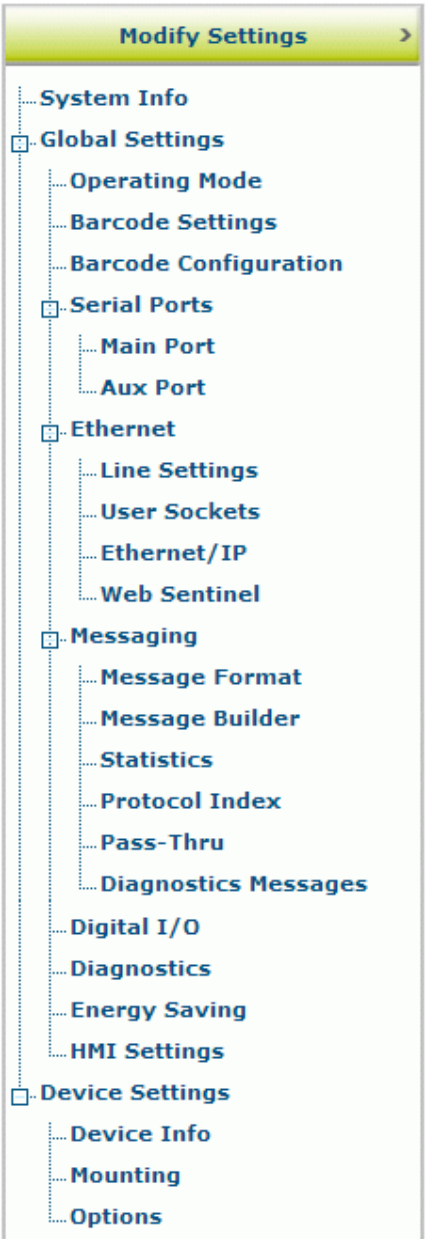

4.4 MODIFY SETTINGS | SYSTEM INFO

Use **System Info** to identify and name the scanning system (whether it includes one scanner or an array), indicate Master or Standalone systems, discover the scanners included in the system, and distribute software from the Master scanner to Slave scanners in the system.

To view and edit system information:

1. In the tree menu under **Modify Settings**, click System Info. The System Info window opens.

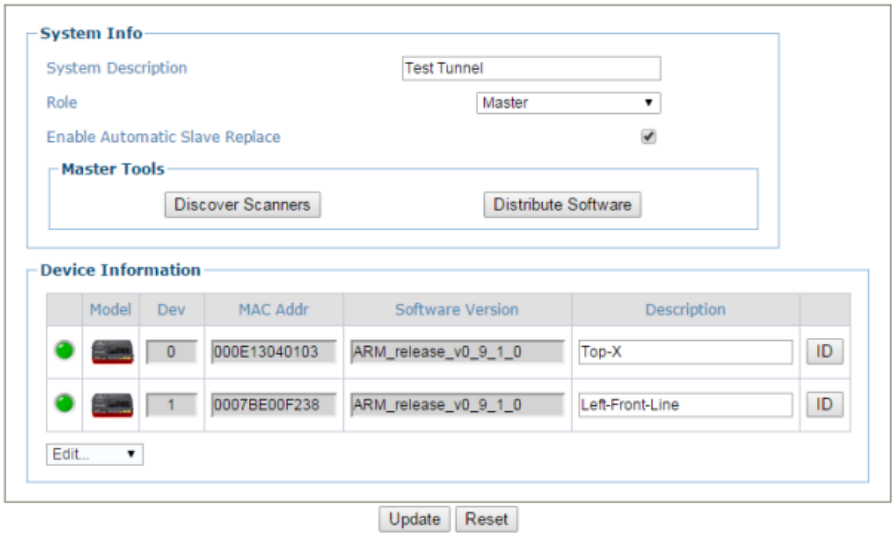

2. Enter the appropriate information in the form as described below:

Field Name	Action/Definition
System Info	
System Description	Enter a name to identify this scanning system in the text field.
Role	Select **Standalone** or **Master** from the drop-down list. **Standalone** (not controllers) indicates a scan point with a single barcode scanner. **Master** indicates that the system is made up of more than one barcode scanner in a master and slave configuration. **NOTE**: The MSC 900 Controller will always be shown as Master and cannot be changed.
Enable Automatic Slave Replace	There are two way to replace a defective scanner: • If the check box **is not** selected: The replacement will be done only pressing the RESTORE *(see section 4.8.1)* key on the scanner or using the **Edit** drop-down. • If the check box **is** selected: The replacement will be completely automatic. This will work also as Hot-Automatic-Replacement without turning the system power off and on.

Master Tools	
Discover Scanners	Click **Discover Scanners** to automatically find all of the scanners in an array. The discovered scanners will be listed in the **Device Information** portion of the window. This step is only done during initial configuration and is not a troubleshooting option.

Distribute Software	Click **Distribute Software** to send the current software residing on the master scanner to all of the slave scanners listed in the **Device Information** section of the window.

Device Information	
Status	Green = No errors and ready to read Gray = Unit not connected (unit not seen by master) Red = Error. If you click on the red circle it will take you to the status viewer page for more info on the error
Model	Displays an image of the scanner/controller model
Dev	Displays the system designation for the device
MAC Address	Displays the MAC Address (Media Access Control Address) for the device
Software version	Displays the device installed software version.
Description	Enter a user-defined description of the device.
ID	Click **ID** to visually identify a scanner in an array/tunnel. When clicked, all the scanner lasers will turn off except for the selected scanner, whose laser will blink for 20 seconds.
Edit	Select to **Remove, Reassign, Add,** or **Replace** from the Edit drop-down list to complete the following actions: • **Remove:** When selected, you can select the scanner to remove from the Dev/MAC Address drop-down list. Click **OK** to remove the selected scanner from the system. • **Reassign:** When selected, the Dev column of the selected slave scanner (selected with ID) presents a drop-down list of Dev numbers. Select a different number to reassign the scanner. • **Add:** This is an option under the **Edit** drop-down list in the **Unconfigured Devices** section of the screen. Click **OK** to add the selected device to the system.

- **Replace:** This is an option under the **Edit** drop-down list in the **Unconfigured Devices** section of the screen. When selected, you can select from a list of slave scanners *(Those with a gray indicator, meaning the unit is not connected)* in the system using **MAC Address** and **Dev** drop-down lists. Click **OK** to replace the selected scanner with the **Unconfigured Device**.

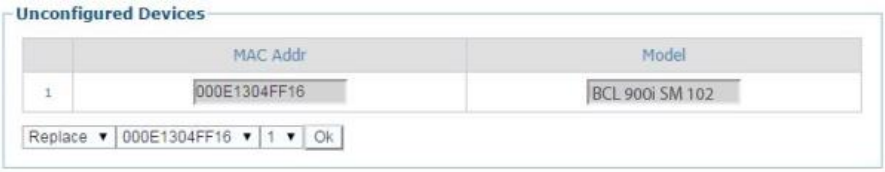

3. When you have finished making changes, click **Update** to save or click **Reset** to revert to the previously saved values.

4.5 MODIFY SETTINGS | GLOBAL SETTINGS

Use the Global Settings menu tree selections during initial setup to configure your **BCL 900i Barcode Scanning System**. Global settings are applied to the system Master, and then distributed by the Master Scanner to the Slave devices. If necessary, you can later make modifications to the global system settings using the same menu selections.

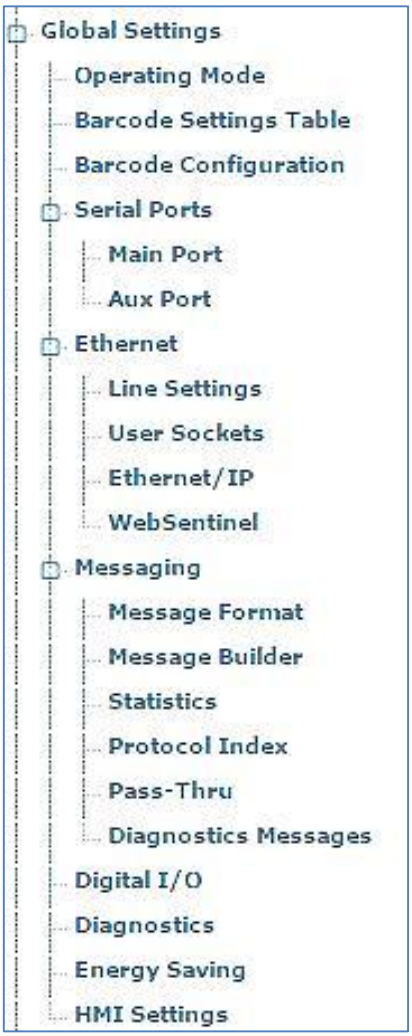

4.5.1 Modify Settings | Global Settings | Operating Mode

Use Operating Mode to select an operating mode and configure that modes related parameters. The three operating modes available are **On Line**, **Continuous**, and **PackTrack,** and the available settings differ depending on the operating mode selected.

To edit the system Operating Mode:

1. In the tree menu under **Modify Settings**, navigate to **Global Settings | Operating Mode**. The Operating Mode window opens.

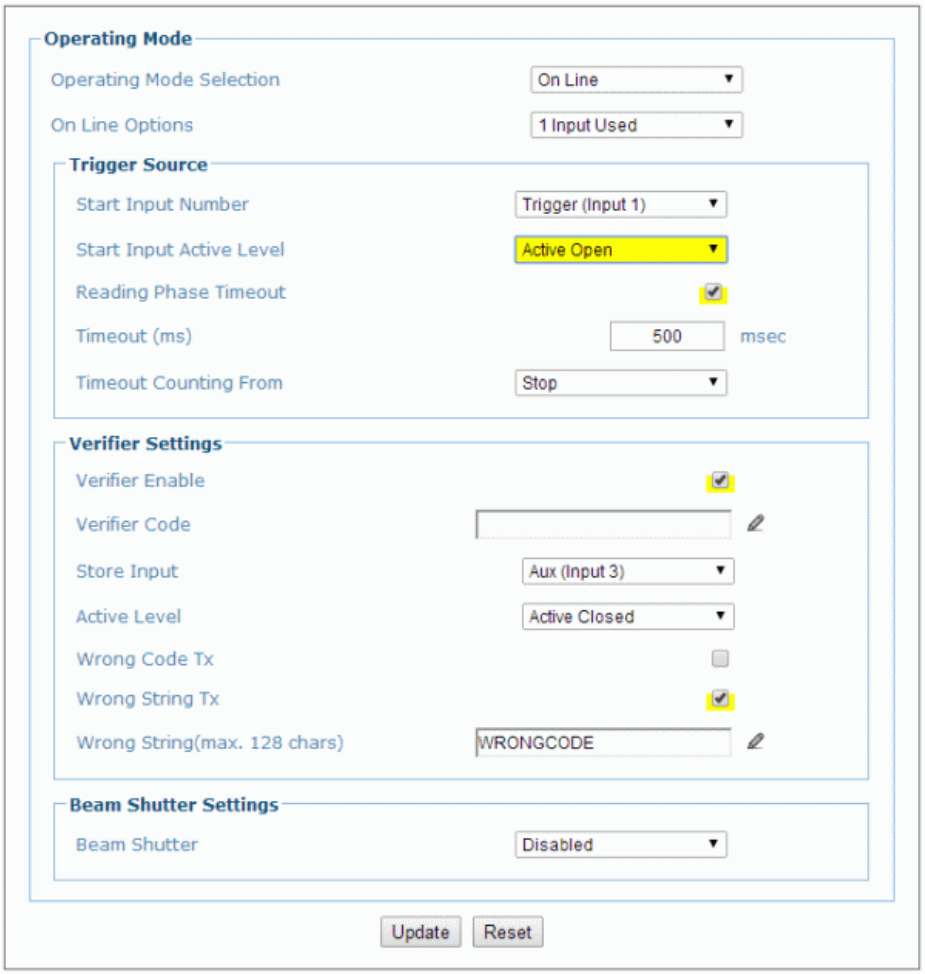

2. Enter the appropriate information in the form as described below:

Operating Mode	**Select On Line, Continuous, or PackTrack from the Operating Mode Selection drop-down list.**
On Line	Select **1 Input Used**, **2 Inputs Used**, or **Serial** from the **On Line Options** drop-down list. Each selection has a different set of parameters as described below. In this operating mode, the reading phase is defined as the time between the **Phase ON** and **Phase OFF** events. The Phase events can be signals coming from one or two external presence sensors connected to the scanner inputs or serial start/stop strings sent from the host over the serial interface or Ethernet input. 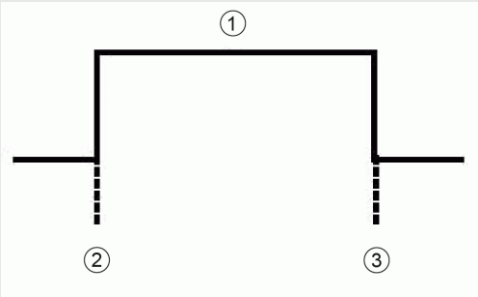 ① Reading Phase ② External Trigger active ③ External Trigger inactive
	1 Input Used The reading phase takes place during the active phase of the presence sensor, when the scanner tries to acquire and correctly decode the code. If the operation is successful, the barcode characters are transmitted on the serial interface or Ethernet input in the format defined by the current configuration and the right output event is raised at the end of the photoelectric sensor's active phase. If a code cannot be decoded, a no read message is sent and the no read event is raised at the end of the photoelectric sensor's active phase.

Trigger Source	
Start Input Number	Select the Input Number from the selections available in the drop-down list. This option defines the numbered input that will start the trigger cycle.

Start Input Active Level	Select **Active Open** or **Active Closed** from the drop-down list. • **Active Open**: The input is active when there is no current flowing through IN pins. The input from the trigger source is normally closed. The scanner goes into trigger mode when the input source is opened. • **Active Closed**: The input is active when current flows through IN pins. The input from the trigger source is normally opened. The scanner goes into trigger mode when the input source is closed.
Reading Phase Timeout	Select the check box to define a timeout for the **On Line Serial** mode and the **On Line 1 Input** mode.
Timeout (ms)	Enter a timeout in milliseconds (from 40 to 15000 ms) in the field provided. The **Timeout** represents the period of time for the reading phase.
Timeout Counting From	Select **Start** or **Stop** from the drop-down list. • When **Start** is selected, the **Timeout** used to determine the reading phase will begin from the **Start Input** or **Serial Start String** (normal operation) • When **Stop** is selected, the **Timeout** used to determine the reading phase will begin from the **Stop Input** or **Serial Stop String** (effectively extending the reading phase).
Verifier Settings	
Verifier Enable	Select the check box to enable the **Code Verifier** operating mode.
Verifier Code	Click to activate the Text Entry Tool and create the string text used as the match code to the decoded codes. Use characters from **NUL** (00H) to ~ (7EH). Click **Submit** to save your text to the origin window text field, or click **Cancel** to return to origin window without transferring text.
Store Input	Select an option from the drop-down list to define the number of the input used to automatically store the verifier code. This input must be activated before the reading phase starts, the verifier code must be read and then after the end of the reading phase the input must be deactivated.

Active Level	Select **Active Open** or **Active Closed** from the drop-down list to choose the active state of the input. • **Active Open**: The input is active when there is no current flowing through IN pins. The input from the verify mode source is normally closed. The scanner goes into trigger mode when the input source is opened. • **Active Closed**: The input is active when current flows through IN pins. The input from the verify mode source is normally opened. The scanner goes into trigger mode when the input source is closed.
Wrong Code Tx	Select the check box to enable the transmission of the Wrong Code (Non-Valid Code).
Wrong String Tx	Select the check box to enable the transmission of the Wrong String (Non-Valid String) message.
Wrong String (max. 128 chars)	Enter a text string to be sent in case of a mismatch (wrong code read/non-valid code).
Beam Shutter Settings	
Beam Shutter	Select **Disabled**, **Triggered**, or **Enabled** from the drop-down list. The Beam Shutter turns the laser off. The Beam Shutter option can be used to increase the overall laser diode life when used in high ambient temperature applications (over 35° C); reduce power consumption; and to turn off the laser for safety purposes. • **Disabled**: The laser is always on. • **Triggered**: The laser is turned off as soon as the code(s) are read or when the reading phase ends. The laser is turned on again when the next reading phase starts. • **Enabled**: The laser is always off and all operations are suspended.

2 Inputs Used	The reading phase is defined by 2 inputs. It starts when the **Start Input** is activated and stops when the **Stop Input** is deactivated (unless the **Extended Phase** is enabled).
Trigger Source	
Extended Phase	Available only for the **On Line/2 Inputs** option. If checked, it allows the **Stop Input** to end the reading phase only if the **Start Input** is also deactivated.

Start Input Number	Select an input from the drop-down list to define the number of the input starting the reading phase.
Start Input Active Level	Select **Active Open** or **Active Closed** from the drop-down list. • **Active Open**: The input is active when there is no current flowing through IN pins. The input from the trigger source is normally closed. The scanner goes into trigger mode when the input source is opened. • **Active Closed**: The input is active when current flows through IN pins. The input from the trigger source is normally opened. The scanner goes into trigger mode when the input source is closed.
Stop Input Number	Select an input from the drop-down list to define the input ending the reading phase.
Stop Input Active Level	Select **Active Open** or **Active Closed** from the drop-down list to define the active state of the input. • **Active Open**: The input is active when there is no current flowing through IN pins. The input from the trigger source is normally closed. The scanner goes into trigger mode when the input source is opened. • **Active Closed**: The input is active when current flows through IN pins. The input from the trigger source is normally opened. The scanner goes into trigger mode when the input source is closed.
Reading Phase Timeout	If checked, it allows defining a timeout for the Serial On Line mode and the On Line 1 Input mode.
Stop Phase Edge	Select **Trailing** or **Leading** from the drop-down list to define the signal edge of the stop input used by the scanner as reference for ending the reading phase: • **Trailing**: The reading phase ends when the package has completely passed by the stop input. • **Leading**: The reading phase ends as soon as the stop input detects the front edge of the package.

	Beam Shutter Settings	
	Beam Shutter	Select **Disabled**, **Triggered**, or **Enabled** from the drop-down list. The Beam Shutter turns the laser off. The Beam Shutter option can be used to increase the overall laser diode life when used in high ambient temperature applications (over 35° C); reduce power consumption; and to turn off the laser for safety purposes. • **Disabled**: The laser is always on. • **Triggered**: The laser is turned off as soon as the code(s) are read or when the reading phase ends. The laser is turned on again when the next reading phase starts. • **Enabled**: The laser is always off and all operations are suspended.
Serial	In **Serial/On-Line** mode the reading phase starts when the **Serial Start String** is received on the serial interface and ends when the **Serial Stop String** is received or when a programmed **Reading Phase** Timeout expires. If decoding is correct, the data is transmitted on the serial port as defined by the configuration. The output line selected for the right output event is activated and the relative message is transmitted on the serial interface or Ethernet input. In case of a bad read, a no read message is transmitted on the serial interface. The output line selected for the no read event is activated and the relative message is transmitted on the serial interface or Ethernet input.	
	Trigger Source	
	Serial Start String (max. 32 chars)	Click to activate the **Text Entry Tool** and create the string text used to signal the beginning of the reading phase. Use characters from NUL (00H) to ~ (7EH). Click **Submit** to save your text to the origin window text field, or click **Cancel** to return to origin window without transferring text. The **Serial Start** string must be different from the **Serial Stop** string and **Motor ON/OFF** strings. When **ACK/NAK Protocol** or **Energy Saving** is enabled, the **Serial Start/Stop Strings** cannot contain ACK/NAK characters.

Serial Stop String (max. 32 chars)	Click to activate the **Text Entry Tool** and create the string text used to signal the end of the reading phase. Use characters from NUL (00H) to ~ (7EH). Click **Submit** to save your text to the origin window text field, or click **Cancel** to return to origin window without transferring text. The **Serial Stop** string must be different from the **Serial Start** string and **Motor ON/OFF** strings. When **ACK/NAK Protocol** or **Energy Saving** is enabled, the **Serial Start/Stop Strings** cannot contain ACK/NAK characters.
Reading Phase Timeout	Select the check box to define a timeout for the **Serial On Line** mode.
Timeout (ms)	Enter a timeout in milliseconds (from 40 to 15000 ms) in the field provided. The **Timeout** represents the period of time for the reading phase.
Timeout Counting From	Select **Start** or **Stop** from the drop-down list. • When **Start** is selected, the **Timeout** used to determine the reading phase will begin from the **Start Input** or **Serial Start String** (normal operation) • When **Stop** is selected, the **Timeout** used to determine the reading phase will begin from the **Stop Input** or **Serial Stop String** (effectively extending the reading phase).
Beam Shutter Settings	
Beam Shutter	Select **Disabled**, **Triggered**, or **Enabled** from the drop-down list. The Beam Shutter turns the laser off. The Beam Shutter option can be used to increase the overall laser diode life when used in high ambient temperature applications (over 35° C); reduce power consumption; and to turn off the laser for safety purposes. • **Disabled**: The laser is always on. • **Triggered**: The laser is turned off as soon as the code(s) are read or when the reading phase ends. The laser is turned on again when the next reading phase starts. • **Enabled**: The laser is always off and all operations are suspended.

Continuous	The reading phase is always active and allows reading two or more codes when placed along the same scan line. Code transmission is identical to the other operating modes except that there is no transmission on the serial port in case of a No Read condition.

Mode Setting

Code Filter

Select **Disable**, **Timeout**, **Encoder Steps**, or **Tx Line** from the **On Line Options** drop-down list. This parameter determines criteria for flushing entries from the code filtering list depending on the type of list management:

- The **Code Filter Depth** parameter, when not = 0, manages a FIFO (First In First Out) list of codes which are compared for filtering. The **Timeout** and **Encoder Steps** values are in addition to the cyclical flushing of entries when the FIFO list depth is exceeded.

- When **Code Filter** is set to **Tx Line** an internal list is managed where each entry is flushed when the **Tx Line** distance is exceeded.

  The application program inherently compares codes based on content and code length.

Each Code Filter criteria has its own relative value parameter.

- **Disable**: No additional criteria are applied. If code filtering is enabled through the Code Filter Depth parameter, the FIFO list is only modified by new code entries (FIFO list depth exceeded).

- **Timeout**: A timeout measured in milliseconds is also applied to each code entry. The current code entry will be flushed from the list when the timeout expires.

- **Encoder Steps**: a threshold measured in encoder steps is also applied to each code entry. The current code entry will be flushed from the list when the number of encoder steps is exceeded.

- **Tx Line**: The distance measured in mm to the transmit line is applied to each code entry. The current code entry will be flushed from the list when the distance in mm is exceeded. When Tx Line is selected, all the networked scanners must have been calibrated using PackTrack *(See section 5.6 PackTrack).*

NOTE: When Code Filter = Tx Line:

The Code Filter Depth parameter is no longer available because the application program manages an internal list which depends solely on the number of codes decoded before the Tx Line is reached.

Any code which is determined to be identical to a code in the list by comparing the filter conditions will be discarded, and to increase precision the code in the list will have its x, y, z position coordinates adjusted as the average between the two readings.

x=x1+x2/2 , y=y1+y2/2 , z=z1+z2/2

Use Encoder Select the check box to activate the encoder settings.

Code Filter Depth In **Continuous mode**, **Code Filter Depth** is used to avoid multiple reads of the same code. The entered value (other than zero) defines the number of codes to memorize in a FIFO (First In First Out) list.

When a code is read, it is compared to the list. The application program inherently compares codes based on content and code length. If the list contains a code identical to the current code being read, the current code is discarded. If not, the current code is accepted and added to the list in the first position; the remaining codes in the list are shifted. If the list is full the oldest code in the list will be flushed.

When = 0, there is no FIFO list and there is no filtering.

Selection: a value from 0 to 127

Example:

Code Filter Depth = 3

List	Code Read	Accepted
xxx (no codes in list)	A	Yes
Axx	B	Yes
BAx	B	No
BAx	C	Yes
CBA	D	Yes
DCB	A	Yes
ADC	A	No

Filter Number of Encoder Steps Enter a number of encoder steps from 1 to 15000. This parameter sets the number of Encoder Steps after which the **FIFO (First In First Out)** list entry is flushed.

Filter Timeout Value (ms)	Enter a timeout value in milliseconds in the field provided. A value between 40 and 15000 ms may be used. This value sets the time limit after which the **FIFO (First In First Out)** list entry is flushed.
Replicate same code when symbologies don't match	Select the check box to enable a further code filter condition according to which a read code is added to the list or discarded. This parameter is available if the **Code Filter Depth** value is other than zero or if the Code Filter value is Tx Line. In addition to the inherent content and code length comparison, this parameter compares the code type (symbology). If the current code being read is identical to any code contained in the list by: content, length and type, the current code is discarded. If not, the current code is accepted and added to the list in the first position; the remaining codes in the list are shifted. If the list is full the oldest code in the list will be flushed.
Replicate same code when X positions don't match	Select the check box to enable a further code filter condition according to which a read code is added to the list or discarded. This parameter is available if the **Code Filter Depth** value is other than zero or if the Code Filter value is Tx Line. In addition to the inherent content and code length comparison, this parameter compares the X coordinate code position. If the current code being read is identical to any code contained in the list by: content, length and X coordinate code position, the current code is discarded. If not, the current code is accepted and added to the list in the first position; the remaining codes in the list are shifted. If the list is full the oldest code in the list will be flushed.
Replicate same code when Y positions don't match	Select the check box to enable a further code filter condition according to which a read code is added to the list or discarded. This parameter is available if the **Code Filter Depth** value is other than zero or if the Code Filter value is Tx Line. In addition to the inherent content and code length comparison, this parameter compares the Y coordinate code position. If the current code being read is identical to any code contained in the list by: content, length and Y coordinate code position, the current code is discarded. If not, the current code is accepted and added to the list in the first position; the remaining codes in the list are shifted. If the list is full the oldest code in the list will be flushed.
Replicate same code when Z positions don't match	Select the check box to enable a further code filter condition according to which a read code is added to the list or discarded. This parameter is available if the **Code Filter Depth** value is other than zero or if the Code Filter value is Tx Line In addition to the inherent content and code length comparison, this parameter compares the Z coordinate code position. If the current code being read is identical to any code contained in the list by: content, length and Z coordinate code position, the current code is discarded. If not, the current code is accepted and added to the list in the first position; the remaining codes in the list are shifted. If the list is full the oldest code in the list will be flushed.
Continuous Threshold (number of scans)	Enter an *N* number of scans without a code allowed in order to assure code identification in the reading zone. Enter a value from 10 to 32665.

	Encoder Settings	
	Physical Encoder	Select **Disable** or **Enable** from the drop-down list: • **Disable**: No encoder is enabled • **Enable**: A physical encoder is connected to the Encoder input and is enabled
	Encoder Step (hundredths of millimeter)	Enter the step value of the encoder.
	Conveyor Speed (mm/sec)	This parameter is available only when the Physical Encoder is disabled. It defines the constant speed of the conveyor in mm/sec.
PackTrack	**Refer to *section 5.6* for physical PackTrack installation procedures.** **Trigger Source**	
	Start Input Number	Select an input from the drop-down list to define the number of the input starting the reading phase.
	Start Input Active Level	Select **Active Open** or **Active Closed** from the drop-down list to define the active state of the input. • **Active Open**: The input is active when there is no current flowing through IN pins. The input from the trigger source is normally closed. The scanner goes into trigger mode when the input source is opened. • **Active Closed**: The input is active when current flows through IN pins. The input from the trigger source is normally opened. The scanner goes into trigger mode when the input source is closed.
	Transmission Edge	Select **Trailing** or **Leading** from the drop-down list to define the signal edge of the stop input used by the scanner as reference for ending the reading phase: • **Trailing**: The reading phase ends when the pack has completely passed by the stop input. • **Leading**: The reading phase ends as soon as the stop input detects the front edge of the pack.

Mode Setting	
Distance from PS Line to Tx Line	Enter the distance along the Y axis from the PS (photoelectric sensor) to the **TX Line** (transmit).

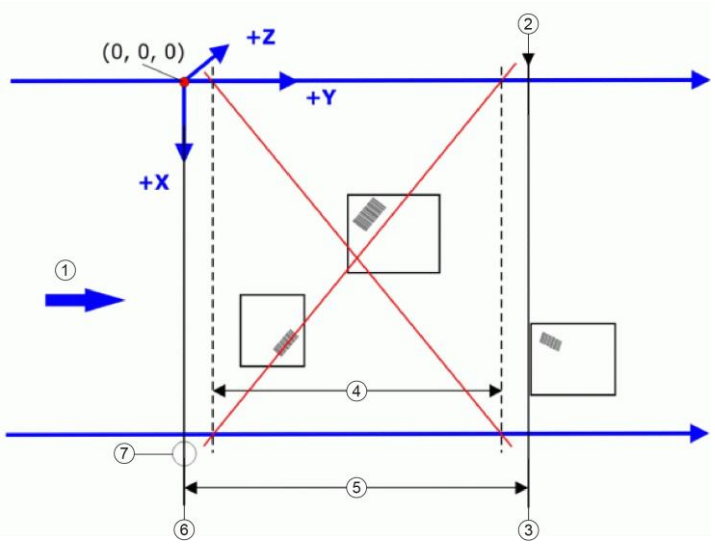

1. Conveyor Direction
2. End of Tracking Area
3. Tx Line
4. Reading Area
5. Tracking Area
6. PS Line
7. Photocell or equivalent signal

NOTE: Tracking starts 10 cm [4 inches] before and stops 10 cm [4 inches] after the Reading Area in order to ensure the barcode is assigned to the correct package.

PS Line

This parameter defines the read signal Y coordinate (mm) referred to the origin of co-ordinates used for PackTrack configuration *(see below).*

Example:

Normally the PS Line coincides with the PackTrack reference where X, Y, Z = 0.
If the presence sensor (photocell or Host PS signal) is moved, you must set the PS Line accordingly and recalculate the Tx Line.

1. PS Line = 0; Distance from PS Line t Tx Line = 2500
2. PS Line = 500; Distance from PS Line to Tx Line = 2000

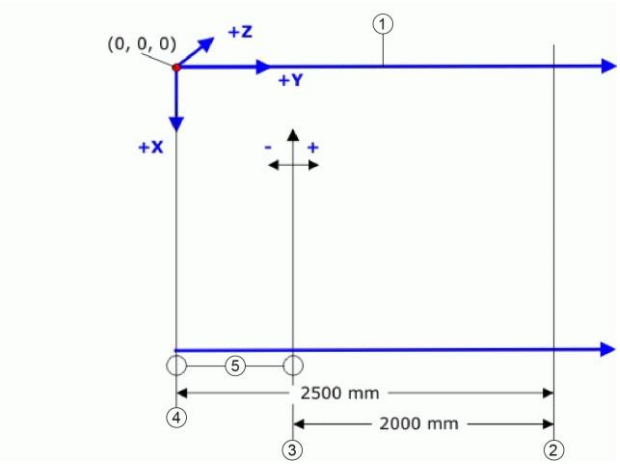

1. Conveyor Direction
2. Tx Line
3. new PS Line = 500 mm
4. original PS Line = 0
5. Photocell

Minimum Pack Length

Enter the minimum length of a pack in the space provided (mm [in]).

Minimum Distance Error Behavior

Select **Ignore Error**, **Compose**, or **Discard Last** from the drop-down list.

- **Ignore Error**: the error is ignored
- **Compose**: Enter the **Minimum Distance Between Packages** in the field provided.
- **Discard Last**: discards all received packages

Minimum Distance Between Packages

Enter the minimum distance (mm, in) between consecutive packages. This field is only available when **Compose** or **Discard Last** is selected for the **Minimum Distance Error Behavior**.

Window Dimension

Enter a **Window Dimension** in the field provided.

The measurement of a barcode position in absolute coordinates performed by the scanners may be affected by an error. PackTrack evaluation can fail in assigning the barcode for this reason. With the **Window Dimension** parameter, the Y coordinates that delimit the pack can be virtually extended to improve the assigning success rate *(see the following figure).*

If the minimum distance between two consecutive packs is less than twice the value of the **Window Dimension**, the window is dynamically resized (dynamic window) to half the distance between the two packs. The code will be assigned within the **Window Dimension** of the closest pack.

If the minimum distance between two consecutive packs is more than twice the value of the **Window Dimension**, the code will be assigned within the **Window Dimension** itself.

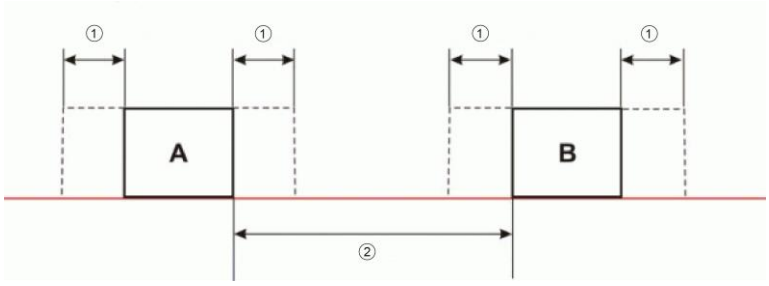

1 Window Dimension
2 Min Distance Between Packs

Encoder Settings	
Physical Encoder	Select **Disable** or **Enable** from the drop-down list: • **Disable**: No encoder is enabled • **Enable**: A physical encoder is connected to the Encoder input and is enabled
Encoder Step (hundredths of millimeter)	Enter the step value of the encoder.
Conveyor Speed (mm/sec)	This parameter is available only when the **Physical Encoder** is **Disabled**. It defines the constant speed of the conveyor in mm/sec.
Beam Shutter Settings	

Beam Shutter	Select **Disabled**, **Triggered**, or **Enabled** from the drop-down list. The Beam Shutter turns the laser off. The Beam Shutter option can be used to increase the overall laser diode life when used in high ambient temperature applications (over 35° C); reduce power consumption; and to turn off the laser for safety purposes. • **Disabled**: The laser is always on. • **Triggered**: The laser is turned off as soon as the code(s) are read or when the reading phase ends. The laser is turned on again when the next reading phase starts. • **Enabled**: The laser is always off and all operations are suspended.
PackTrack Beam Shutter Timeout	Select a time value from the drop-down list. This parameter is available only when **Operating Mode = PackTrack** and **Beam Shutter = Triggered**. By setting this parameter the laser is turned off as soon as the selected timeout expires.

3. When you have finished making changes, click **Update** to save or click **Reset** to revert to the previously saved values.

4.5.2 Modify Settings | Global Settings | Barcode Settings Table

Use **Barcode Settings Table** to select and configure barcodes to be read in your application.

To edit the **Barcode Settings**:

1. In the tree menu under Modify Settings, navigate to **Global Settings | Barcode Settings Table. The Barcode Settings** window opens.

2. Enter the appropriate information in the form as described below:

Field Name	Action/Definition
Top Panel	Displays a list of barcodes that have been added to the system with the following columns:
Idx	Select an option button for the row/barcode you wish to edit. • If a barcode type is displayed in the selected row, its configuration can then be edited. • If a row displaying disabled is selected, a barcode type can be selected and configured for that row.
Symbology	Displays the name of the barcode symbology for that row. If no symbology has been added for a row, **disabled** is displayed.
Minimum Length	Displays the minimum barcode character length for that row's symbology.

Maximum Length	Displays the maximum barcode character length for that row's symbology.
Barcode *n*	**NOTE:** Input fields will vary depending on the selected symbology.
Enable	Select the **Enable** check box to activate the selected barcode. Deselect the **Enable** check box to disable the selected barcode. When the check box has been selected, configuration and code type options are displayed.
Code Symbology	Select a barcode symbology from those available in the **Code Symbology** drop-down list.
EAN Add On	Select **No Add On**, **2 digit Add On**, or **5 digit Add On** from the **EAN Add On** drop-down list. Selecting **2 digit Add On** or **5 digit Add On** adds that many digits as a supplement to the barcode. **EAN** is the acronym for International Article Number, previously known as **European Article Number**.
Minimum Label Length	Enter the minimum character length for the selected barcode.
Maximum Label Length	Enter the maximum character length for the selected barcode.
Match String Rule	Select **Match** or **Do Not Match** from the drop-down list. This parameter defines the matching rule, according to which a code can be transmitted. • **Match**: All codes matching the Pattern Match String will be transmitted • **Do Not Match**: All codes not matching the Pattern Match String will be transmitted

Pattern Match String (max. 200 chars)

Click to activate the Text Entry Tool and create a pattern match string. A code can also be identified by its content. A pattern matching string is programmable for each code and if the read codes do not match the defined string, a No Read Event will be returned.

It is possible to define the matching string by inserting:

- all printable characters
- non printable ASCII characters available in the list which appears by right-clicking on the parameter edit box
- * = defining any string consisting of an undefined number of characters (it may be empty)
- ? = identifying any character to be found in the position indicated within the string

If your application requires inserting ?, * and NUL as characters, it is necessary to use the following syntax:

- ? character = <NUL>?
- * character = <NUL>*
- NUL character = <NUL>00
- other extended ASCII characters = <NUL>xy, where xy identifies the character hex value

Examples:

Match a code starting with 123 string and followed by any string of characters:

- Match String = 123*
- Example Code = 123aC53

Match a code ending with 123 string preceded by any string of characters:

- Match String = *123
- Example Code = 41pO123

Match a code having 123 string in any position:

- Match String = *123*
- Example Code = 41pO123253

Match a code starting with 123 string followed by three generic characters and an undefined string of characters, in this case no character:

- Match String = 123???*
- Example Code = 123ad2

Match any code of four characters:

- Match String = ????
- Example Code = gT6k

Match a code with 6 characters in any position having 12 as central characters:

- Match String = *??12??*
- Example Code = datal12og35

The following is an example of a very complex string where ? and* are used both as commands and as characters:

- Match String = *45<NUL>??*??AC<NUL>*251?*
- Example Code = GEN45?3iusdsAC*2516300

NOTE: For **Codabar** codes the start/stop characters must be considered in the match conditions.
For all codes which use check digits, if the **Check Digit** is transmitted, it must be considered in the match conditions.

Options	**NOTE:** Input fields will vary depending on the selected symbology.
Decoding Safety	Enter a number from **1** to **100** (**1** = control disabled) in the field provided. It verifies that an *N* number of decodes are performed with the same result before code reading is accepted as valid.
Check Digit	Select the check box to improve decoding safety: it is generally the last digit aligned to the right of the code and verifies the validity of the preceding digits. The calculation technique and number of check digits depend on the code selected. It is advised to enable the check digit whenever correct code identification is difficult. The following barcode symbologies include check digits in their definitions: • Code 128 • EAN/UPC • Code 93 For these symbologies the check digit control is not allowed.
Check Digit Type	Select a customized check digit for **Standard**, **German, DHL**, **Daimler-Chrysler**, or **Bosch** from the drop-down list.
Check Digit Tx	Select the check box to include the Check Digit in the code transmitted.

Bar Count

Select **Variable** or an available value from the drop-down list. The Bar Count allows to further specify the number of elements in the read code for Code 128, GS1-128, Code 93, ISBT 128 or Code 39 Full ASCII.

For these codes, the same number of barcode elements (bars + spaces) can be associated with a different number of characters.

- **Variable**: to select the correct number of characters, set Label Length to the desired fixed value and Bar Count to Variable

12
Code 128
Subset A

12
Code 128
Subset C

Digit Number 2, Bar Count variable

- **Code 128 or GS1-128**: from 25 to 499 - a variable number of characters in steps of 6.
- **Code 93 or ISBT 128**: from 25 to 385 - a variable number of characters in steps of 6.
- **Code 39 Full ASCII**: from 29 to 619 - a variable number of characters in steps of 10.

To select a particular barcode length in elements, set Bar Count to the desired fixed value and Label Length to Variable.

12
Code 128
Subset A

1234
Code 128
Subset C

Digit Number variable, Bar Count 31

Match Direction Rule

Select **Disable**, **Forward**, or **Reverse** from the drop-down list. This parameter defines the direction, according to which a code can be transmitted. The direction refers to the code direction with respect to the scan line, in particular: **Forward** = the code start character precedes the stop character in the scan line (Start Ch + Code + Stop Ch); Reverse = the code stop character precedes the start character in the scan line (Stop Ch + Code + Start Ch)

- **Disable**: All codes are transmitted no matter what the direction is
- **Forward**: All codes having a forward direction are transmitted
- **Reverse**: All codes having a reverse direction are transmitted

Start Char Tx

Select **Disabled**, **Lower Case**, or **Upper Case** from the drop-down list. This parameter is available only for **Codabar** code symbologies. It allows transmitting the code start character:

- **Disabled**: The character is not selected;
- **Lower Case**: The character is transmitted in lower case;
- **Upper Case**: The character is transmitted in upper case.

Stop Char Tx

Select **Disabled**, **Lower Case**, or **Upper Case** from the drop-down list. This parameter is available only for Codabar code symbologies. It allows transmitting the code stop character:

- **Disabled**: The character is not selected;
- **Lower Case**: The character is transmitted in lower case;
- **Upper Case**: The character is transmitted in upper case.

3. When you have finished making changes, click **Update** to save or click **Reset** to revert to the previously saved values.

4.5.3 Modify Settings | Global Settings | Barcode Configuration

Use **Barcode Configuration** to configure how the system defines a no read barcode, and configure and filter NOREAD messages.

To edit the Barcode Configuration:

1. In the tree menu under **Modify Settings**, navigate to **Global Settings | Barcode Configuration**. The **Barcode Configuration** window opens.

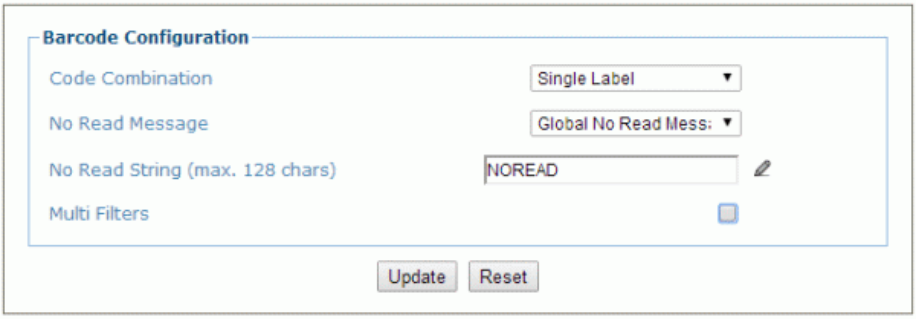

2. Enter the appropriate information in the form as described below:

Field Name	Action/Definition
Code Combination	Select **Single Label**, **Standard Multi Label**, **Logical Combination**, or **Code Collection** from the drop-down list. The Code Combination parameter selects the decoding mode for the scanner. • **Single Label**: In this mode only one barcode can be read in each reading phase; however it can be determined automatically from up to 10 enabled codes. The scanner stops decoding as soon as a code is read. If the code is not read during the reading phase, the No Read message is produced. • **Standard Multi Label**: In Multi Label mode the barcodes selected (up to 10), will all be read in the same reading phase. If the reading phase terminates before all the codes are read, a Global No Read message will be produced, unless it is disabled, in which case a Local No Read will be produced. **NOTE:** In case of Multi Label, the codes will be distinguished EITHER by their symbology, OR by their contents. If two (or more) codes share the same symbology and content, the scanner will perceive them as a unique code. • **Logical Combination**: In Logical Combination mode the codes of the groups defined by the Logical Combination Rule are read in the same reading phase. • **Code Collection**: In Code Collection mode expected codes are collected within a single reading phase in the order in which they are read. The No Read message is produced only if none of the codes are read. Up to 50 codes can be collected.

Barcode Configuration > Single Label

When **Single Label** has been selected from the **Code Combination** drop-down list, the Barcode Configuration window reveals related input fields.

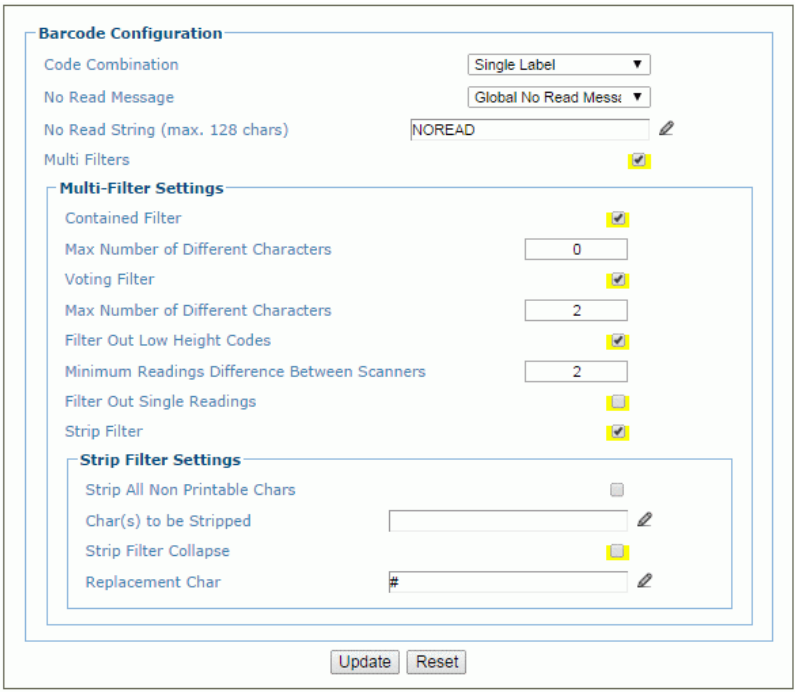

Enter the appropriate information in the form as described below:

Field Name	Action/Definition
Code Combination	**Single Label** has been selected.
No Read Message	Select **Disable No Read Message**, **Global No Read Message**, or **Local No Read(s) Message** from the drop-down list. The No Read condition occurs whenever a code cannot be read or decoded. • **Disable No Read Message**: The No Read Message is not transmitted. • **Global No Read Message**: The No Read String will be sent if the scanner is unable to decode one or more barcodes in the reading phase. • **Local No Read(s) Message**: Do not use this option when working in Single Label mode.
No Read String (max. 128 chars)	Click to activate the Text Entry Tool and create a string to be displayed when **Global No Read Message** is selected from the **No Read Message** drop-down list.
Multi Filters	Select the check box to display the **Multi-Filter Settings** options.

Multi-Filter Settings	
Contained Filter	Select the check box to reveal the **Max Number of Different Characters** field. When checked, this filter attempts to eliminate false multiple reads by determining if a short code read is "contained in" (is a sub-string of), another longer code read. This condition implicates that the short code is probably a misread of the same longer code and therefore should be ignored, (should not be considered as a multiple read of a different code). This filter is based upon the following rules: • a multiple read condition occurs • all decoded codes of the same type are compared with each other **Rule 1**: the shorter code is considered contained in the longer code if the character string is found in the same order; the longer code may have a single block of characters in any position (before, after or in between the compared strings) **Example**: The code **123456** is considered contained in the following codes: 00123456, 12345600, 12378456. The code **123456** is not considered contained in the following codes: 1234**65**07 (string out of order), 12345**700** (string not complete), 12**0**3**78**456 or **00**12345**00** (multiple blocks in the string). **Rule 2**: the shorter code is not filtered by rule 1. In the longer code, all possible sub-strings of the same length as the shorter code string are compared with the shorter code string. The shorter code is considered contained in the longer code if the number of different characters between the compared codes is less than or equal to the Max Number of Different Characters. The shorter code will be filtered by rule 2. Example: If Max Number of Different Characters = 1: The code 123456 is considered contained in the following codes: 12305600, 00123056, 8812305688 because there is only one different character in the compared string. The code 123456 is not considered contained in 123066789 because there are two different characters in the compared string. **CAUTION:** If the **Contained Filter** parameter is used when **Message Tx Selection** *(see section 4.5.6)* is set to **On Decoding**, the filter conditions may be satisfied before the reading phase ends resulting in possible successive multiple read errors.

Max Number of Different Characters

Enter a value from 0 to 5 in the field provided to define the maximum number of different characters allowed to still consider a code as being included in another one and therefore to be filtered.

If the number of different characters between the compared codes exceeds the value of this parameter, the codes are considered as different and will not be filtered (a multiple read of a different code occurs).

If the number of different characters between the compared codes is less than or equal to the value of this parameter, the short code is considered as a sub-string of the longer code and will be filtered (no multiple read occurs).

Examples:

If Max Number of Different Characters = 2:
The code **123456** read once, is considered the same as the following codes read multiple times: 1**3**3**0**56, 123**54**6, 12345**7** because there are two or less different characters by position in the compared codes.

The code **123456** read once, is not considered the same as the following codes read multiple times: 1**5**3**24**6, 1**0**3**0**5**7**, **654321** because there are at least three different characters by position in the compared codes.

Voting Filter

Select the check box to reveal the **Max Number of Different Characters** field.

When checked, this filter attempts to eliminate false multiple reads by comparing the number of different characters by position between two codes of the same type and length. This condition implicates that reading a code of the same type and length having very few different characters is probably a misread of the code itself and therefore the code read the least number of times should be ignored, (should not be considered as a multiple read of a different code).

This filter is based upon the following rules:

- a multiple read condition occurs;
- the two codes are of the same type;
- the two codes have the same length;
- the number of different characters by position is equal to or less than the number defined by the Max Number of Different Characters parameter;
- **Message Tx Selection** *(see section 4.5.6)* must be set to **After Reading Phase Off**.

Filter Out Low Height Codes

Select the check box to reveal the **Minimum Readings Difference Between Scanners** field**.**

Background: This option was developed for the airports systems where there are often tall bar height codes and low bar height codes with the same content attached to baggage. Travelers will often remove the large, tall bar height code, while leaving the smaller, low bar height codes attached to the bag. The next time they travel they may have multiple low bar height codes on their baggage plus the new tall bar height and low bar height codes for the new trip.

This option instructs the system to ignore low bar height codes, which are likely read only once or twice, in favor of tall bar height codes, which will likely be read multiple times.

This is used in tunnel applications where multiple barcodes are read and there is a need to filter out one of the barcodes. If less than *x* number of scanners read the barcode, then it will be considered a NOREAD for that code.

Minimum Readings Difference Between Scanners	Enter the minimum number of scanners that must read a barcode for it to be considered a valid read.
Filter Out Single Readings	With the check box selected, if only 1 scanner reads a code it will be considered a NOREAD.
Strip Filter	Select the check box to display the **Strip Filter Settings** options. This is a second level filter that when enabled allows eliminating characters not managed by the host.

STRIP FILTER SETTINGS	
Strip All Non Printable Chars	Select the check box to remove all non- printable ASCII characters from the code (000-020 and 127).
Char(s) to be Stripped	Click to activate the Text Entry Tool and enter specific characters to be stripped from the code. Click **Submit** to save your text to the origin window text field, or click **Cancel** to return to origin window without transferring text.
Strip Filter Collapse	Select the check box to remove the stripped characters from the code and, therefore, reduce the code length (collapsed). It can even be null.
Replacement Char	Click to activate the Text Entry Tool and enter the substitution character to replace all the stripped ones. Click **Submit** to save your text to the origin window text field, or click **Cancel** to return to origin window without transferring text.

3. When you have finished making changes, click **Update** to save or click **Reset** to revert to the previously saved values.

Barcode Configuration > Standard Multi Label

When **Standard Multi Label** has been selected from the **Code Combination** drop-down list, the Barcode Configuration window reveals related input fields.

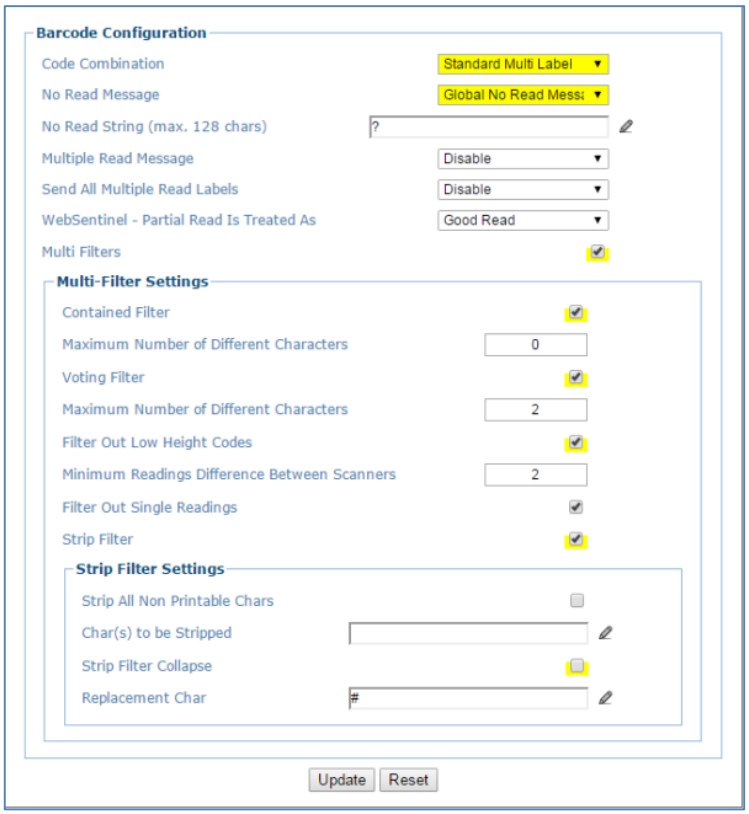

NOTE: In case of Multi Label, the codes will be distinguished EITHER by their symbology, OR by their contents. If two (or more) codes share the same symbology and content, the scanner will perceive them as a unique code.

1. Enter the appropriate information in the form as described below:

Field Name	Action/Definition
Code Combination	Standard Multi Label has been selected.
No Read Message	Select **Disable No Read Message**, **Global No Read Message**, or **Local No Read(s) Message** from the drop-down list. The No Read condition occurs whenever a code cannot be read or decoded. • **Disable No Read Message**: The No Read Message is not transmitted. • **Global No Read Message**: The No Read String will be sent if the scanner is unable to decode one or more barcodes in the reading phase. • **Local No Read(s) Message**: This option is useful when one or more codes are not read in the reading phase or when more codes than the expected number set by the configuration parameters are read. If working in **Standard Multi Label** mode, this option activates the **Code Label Local No Read String** and the **Code Label Local**

	Multiple Read String parameters which allow setting a **Local No Read String** and a **Local Multiple** string for each defined code symbology.
No Read String (max. 128 chars)	Click to activate the **Text Entry Tool** and create a string to be displayed when **Global No Read Message** is selected from the **No Read Message** drop-down list. Click **Submit** to save your text to the origin window text field, or click **Cancel** to return to origin window without transferring text.
Multiple Read Message	Select **Disable** or **Enable** from the drop-down list. This string will be sent if, during the reading phase, the scanner reads more than the number of the expected barcodes set by the configuration parameters.
Multiple Read String (max. 128 chars)	Click to activate the **Text Entry Tool** and create a string to be displayed in case of **Multiple Read Message**. Click **Submit** to save your text to the origin window text field, or click **Cancel** to return to origin window without transferring text. This parameter is only available when **Multiple Read Message** is enabled and the **No Read Message** selection is different from Local No Read(s) String. It is possible to select either the ASCII or HEX value. If disabled, the scanner transmits the first code read.
Send All Multiple Read Labels	For **Advanced Data Format only**, by enabling this parameter all multiple read labels will be included in the output message. They can be separated by the **Multiple Read Separator**. **Multiple Read Label Separator String (max. 128 chars):** • The Multiple Read Label Separators (up to 128 bytes) are used to separate multiple read barcodes in the reading phase. • This is meaningful when the Code Combination parameter is set to Multi Label or Logical Combination and the Send All Multiple Read Labels parameter has been enabled. • If selected, they occur within the Code Field and are transmitted after each decoded multiple read barcode.
Multi Filters	Select the check box to display the **Multi-Filter Settings** options.
	Multi-Filter Settings
Contained Filter	Select the check box to reveal the **Max Number of Different Characters** field. When checked, this filter attempts to eliminate false multiple reads by determining if a short code read is "contained in" (is a sub-string of), another longer code read. This condition implicates that the short code is probably a misread of the same longer code and therefore should be ignored, (should not be considered as a multiple read of a different code). This filter is based upon the following rules: • a multiple read condition occurs • all decoded codes of the same type are compared with each other

Rule 1: the shorter code is considered contained in the longer code if the character string is found in the same order; the longer code may have a single block of characters in any position (before, after or in between the compared strings)

Example: The code **123456** is considered contained in the following codes: 00123456, 12345600, 12378456.

The code **123456** is not considered contained in the following codes: 1234**65**07 (string out of order), 12345**700** (string not complete), 12**0**3**78**456 or **00**12345**00** (multiple blocks in the string).

Rule 2: the shorter code is not filtered by rule 1. In the longer code, all possible sub-strings of the same length as the shorter code string are compared with the shorter code string. The shorter code is considered contained in the longer code if the number of different characters between the compared codes is less than or equal to the Max Number of Different Characters. The shorter code will be filtered by rule 2.

Example:

If Max Number of Different Characters = 1:

The code 123456 is considered contained in the following codes: 12305600, 00123056, 8812305688 because there is only one different character in the compared string.

The code 123456 is not considered contained in 123066789 because there are two different characters in the compared string.

CAUTION: If the Contained Filter parameter is used when **Message Tx Selection** *(see section 4.5.6)* is set to **On Decoding**, the filter conditions may be satisfied before the reading phase ends resulting in possible successive multiple read errors.

Max Number of Different Characters

Enter a value from 0 to 5 in the field provided to define the maximum number of different characters allowed to still consider a code as being included in another one and therefore to be filtered.

If the number of different characters between the compared codes exceeds the value of this parameter, the codes are considered as different and will not be filtered (a multiple read of a different code occurs).

If the number of different characters between the compared codes is less than or equal to the value of this parameter, the short code is considered as a sub-string of the longer code and will be filtered (no multiple read occurs).

Examples:

If **Max Number of Different Characters** = 2:

The code **123456** read once, is considered the same as the following codes read multiple times: 1**33**0**5**6, 123**54**6, 12345**7** because there are two or less different characters by position in the compared codes.

The code **123456** read once, is not considered the same as the following codes read multiple times: 1**5**3**24**6, 1**0**3**0**5**7**, **654321** because there are at least three different characters by position in the compared codes.

Voting Filter	Select the check box to reveal the **Max Number of Different Characters** field. When selected, this filter attempts to eliminate false multiple reads by comparing the number of different characters by position between two codes of the same type and length. This condition implicates that reading a code of the same type and length having very few different characters is probably a misread of the code itself and therefore the code read the least number of times should be ignored, (should not be considered as a multiple read of a different code). This filter is based upon the following rules: • a multiple read condition occurs; • the two codes are of the same type; • the two codes have the same length; • the number of different characters by position is equal to or less than the number defined by the **Max Number of Different Characters** parameter; • **Message Tx Selection** *(see section 4.5.6)* must be set to **After Reading Phase Off**.
Filter Out Low Height Codes	Select the check box to reveal the **Minimum Readings Difference Between Scanners** field**.** **Background:** This option was developed for the airports systems where there are often tall bar height codes and low bar height codes with the same content attached to baggage. Travelers will often remove the large, tall bar height code, while leaving the smaller, low bar height codes attached to the bag. The next time they travel they may have multiple low bar height codes on their baggage plus the new tall bar height and low bar height codes for the new trip. This option instructs the system to ignore low bar height codes, which are likely read only once or twice, in favor of tall bar height codes, which will likely be read multiple times. This is used in tunnel applications where multiple barcodes are read and there is a need to filter out one of the barcodes. If less than *x* number of scanners read the barcode, then it will be considered a NOREAD for that code.
Minimum Readings Difference Between Scanners	Enter the minimum number of scanners that must read a barcode for it to be considered a valid read.
Filter Out Single Readings	With the check box selected, if only 1 scanner reads a code it will be considered a NOREAD.
Strip Filter	Select the check box to display the **Strip Filter Settings** options. This is a second level filter that when enabled allows eliminating characters not managed by the host.

STRIP FILTER SETTINGS	
Strip All Non Printable Chars	Select the check box to remove all non- printable ASCII characters from the code (000-020 and 127).
Char(s) to be Stripped	Click to activate the Text Entry Tool and enter specific characters to be stripped from the code. Click **Submit** to save your text to the origin window text field, or click **Cancel** to return to origin window without transferring text.
Strip Filter Collapse	Select the check box to remove the stripped characters from the code and, therefore, reduce the code length (collapsed). It can even be null.
Replacement Char	Click to activate the Text Entry Tool and enter the substitution character to replace all the stripped ones. Click **Submit** to save your text to the origin window text field, or click **Cancel** to return to origin window without transferring text.

2. When you have finished making changes, click **Update** to save or click **Reset** to revert to the previously saved values.

Barcode Configuration > Logical Combination

When **Logical Combination** has been selected from the **Code Combination** drop-down list, the Barcode Configuration window reveals related input fields.

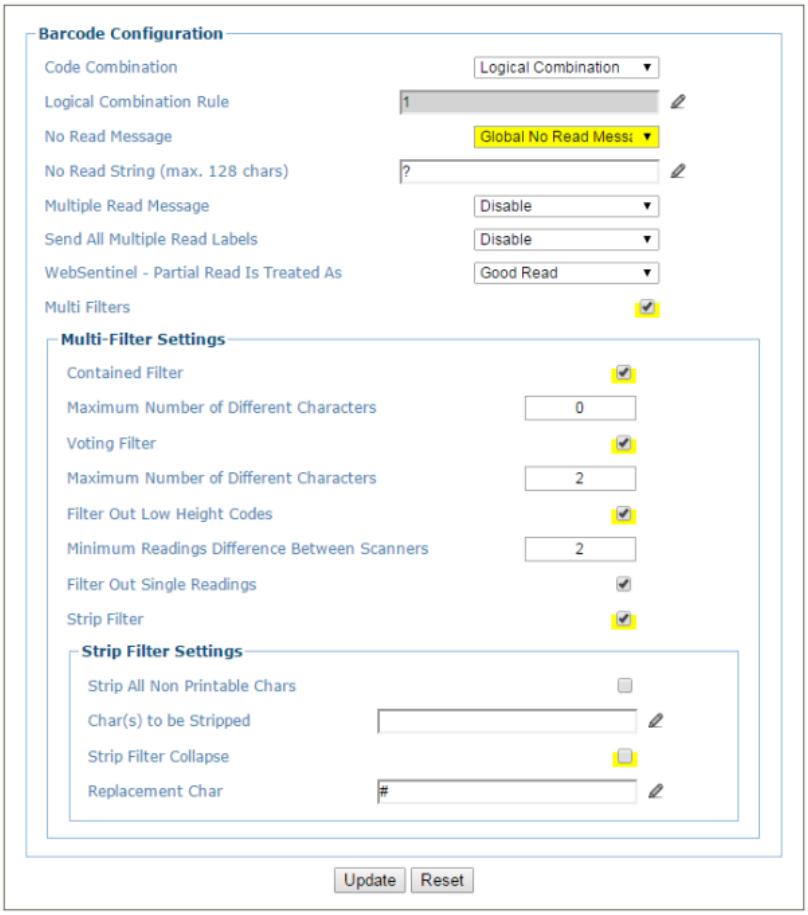

1. Enter the appropriate information in the form as described below:

Field Name	Action/Definition
Code Combination	**Standard Multi Label** has been selected.
Logical Combination Rule	Click to activate the code group selection dialog box.

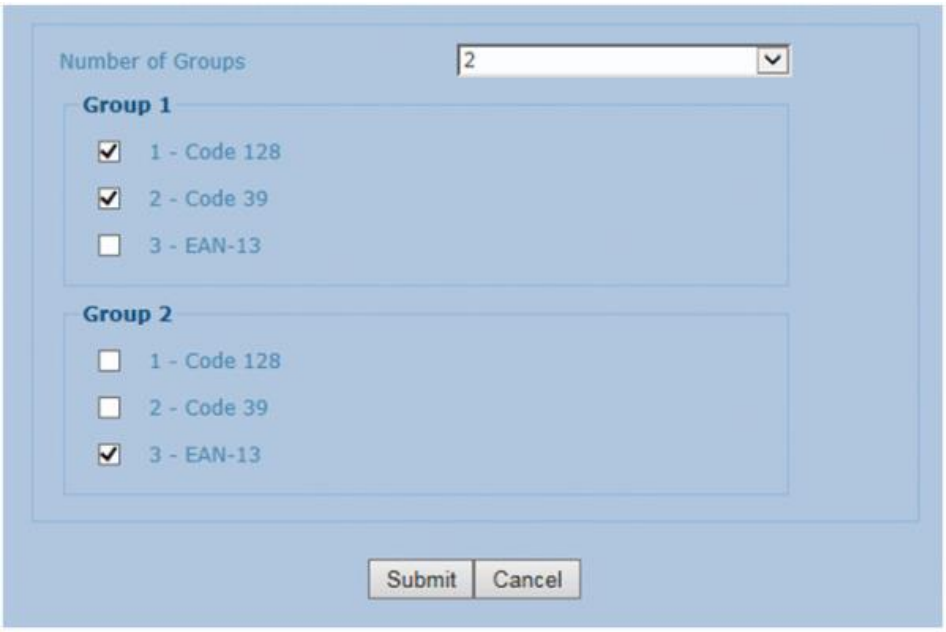

Select the number of groups you wish to use from the Number of Groups drop-down list. Then select the check box next to the Group/Code you wish to define. Click **Submit** to save your text to the origin window text field, or click **Cancel** to return to origin window without transferring text.

Groups and their order define the output message format, while each group identifies an expected code.

When editing the logical combination rule, proceed as follows:

1. Define the Barcode Settings indicating the type of expected code labels. It is possible to define up to 10 different code types;

2. Define how many code types (groups) are expected by editing the combination rule through the following logical operators. Each group may include one or more selected code types.

   & = AND operator which separates a group from the previous/following one;

   ^ = XOR operator to be used to combine different code labels within the same group. It allows reading one of the defined code labels.
   The maximum number of groups to be defined for each rule string is 15.

If Local No Read Message is selected from the No Read Message drop-down list, the Group No Read Messages parameter group is displayed requiring the definition of a Local No Read String for each group.

Examples: Logical Combination Rule

For all the following examples the **No Read Message** parameter is set to **Global No Read Message**.

Example 1

Code label setting#1 = Code 128
Logical Combination Rule = 1&1
Defines 2 groups, each of them expecting a Code 128 label.

Decoded Code Symbology		Output Message
First Label #1	Second Label #1	
---	---	<Header><Global No Read Message><Terminator>
X	---	<Header><Global No Read Message><Terminator>
---	X	<Header><Global No Read Message><Terminator>
X	X	<Header><Code 128 data><Data Packet Separator><Code 128 data><Terminator>

NOTE: If **Multiple Read Message** is enabled and a third label belonging to the Code 128 symbology is decoded, the **Multiple Read** string is transmitted instead. If the **Multiple Read Message** is disabled, the third code label is ignored and only the first two codes are transmitted.

For advanced formatting, if the **Send All Multiple Read Labels** parameter is enabled, then all three labels are sent in the output message; the multiple read label is separated by its own **Multiple Read Label Separator String** which should be different from the **Data Packet Separator** (DPS).

Example 2

Code label setting#1 = Code 39
Code label setting#2 = Code 128
Logical Combination Rule = 1^2
Defines a single group expecting a Code 128 label OR a Code 39 label.

Decoded Code Symbology		Output Message
Label #1	Label #2	
---	---	<Header><Global No Read Message><Terminator>
X	---	<Header><Code 39 data><Terminator>
---	X	<Header><Code 128 data><Terminator>
X	X	<Header><First decoded code/Multiple Read Message string ><Terminator>

Example 3

Code label setting#1 = EAN 8
Code label setting#2 = UPC-A
Logical Combination Rule = 1&1&1^2
Defines three different groups. The first two groups expect an EAN 8 label while the third one expects an EAN 8 label OR an UPC-A label.

Decoded Code Symbology				Output Message
First Label #1	**Second Label #1**	**Third Label #1**	**Label #2**	
---	---	---	---	<Header><Global No Read Message><Terminator>
X	---	---	---	<Header><Global No Read Message><Terminator>
---	X	---	---	<Header><Global No Read Message><Terminator>
---	---	X	---	<Header><Global No Read Message><Terminator>
---	---	---	X	<Header><Global No Read Message><Terminator>
X	X	X	---	<Header><EAN 8 data><DPS><EAN 8 data><DPS><EAN 8 data><Terminator>
X	X	---	X	<Header><EAN 8 data><DPS><EAN 8 data><DPS><UPC-A data><Terminator>
X	X	X	X	<Header><EAN 8 data><DPS><EAN 8 data><DPS><First decoded code/Multiple Read Message string><Terminator>

Example 4

Code label setting#1 = Code 93
Code label setting#2 = Interleaved 2/5
Code label setting#3= EAN-8
Code label setting#4= UPC-A

Logical Combination Rule = 1^2&3^4

Defines 2 groups, each of them expecting one of the defined code types. The first group may expect a Code 93 label or an Interleaved 2/5 label. The second group may expect an EAN-8 label or an UPC-A label.

Decoded Code Symbology				Output Message
Label #1	Label #2	Label #3	Label #4	
---	---	---	---	<Header><Global No Read Message><Terminator>
X	---	---	---	<Header><Global No Read Message><Terminator>
---	X	---	---	<Header><Global No Read Message><Terminator>
---	---	X	---	<Header><Global No Read Message><Terminator>
---	---	---	X	<Header><Global No Read Message><Terminator>
X	X	---	---	<Header><Global No Read Message><Terminator>
X	---	X	X	<Header><Code93><DPS>< First decoded code/Multiple Read Message string><Terminator>
X	X	X	---	<Header><First decoded code/Multiple Read Message string><DPS><EAN 8 data><Terminator>
---	X	X	X	<Header>< Interleaved 2/5 data><DPS>< First decoded code/Multiple Read Message string ><Terminator>
X	---	X	---	<Header><Code 93 data><DPS><EAN 8 data><Terminator>
X	---	---	X	<Header><Code 93 data><DPS><UPC-A data><Terminator>
---	X	X	---	<Header><Interleaved 2/5 data><DPS><EAN 8 data><Terminator>
---	X	---	X	<Header><Interleaved 2/5 data><DPS><UPC-A data><Terminator>
X	X	X	X	<Header><First decoded code/Multiple Read Message string><DPS>< First decoded code/Multiple Read Message string ><Terminator>

No Read Message	Select **Disable No Read Message**, **Global No Read Message**, or **Local No Read(s) Message** from the drop-down list. The **No Read** condition occurs whenever a code cannot be read or decoded. • **Disable No Read Message**: The No Read Message is not transmitted. • **Global No Read Message**: The No Read String will be sent if the scanner is unable to decode one or more barcodes in the reading phase. • **Local No Read(s) Message**: This option is useful when one or more codes are not read in the reading phase or when more codes than the expected number set by the configuration parameters are read. If working in Standard Multi Label mode, this option activates the Code Label Local No Read String and the Code Label Local Multiple Read String parameters which allow setting a Local No Read String and a Local Multiple string for each defined code symbology.
No Read String (max. 128 chars)	Click to activate the **Text Entry Tool** and create a string to be displayed when **Global No Read Message** is selected from the **No Read Message** drop-down list. Click **Submit** to save your text to the origin window text field, or click **Cancel** to return to origin window without transferring text.
Multiple Read Message	Select **Disable** or **Enable** from the drop-down list. This string will be sent if, during the reading phase, the scanner reads more than the number of the expected barcodes set by the configuration parameters.
Multiple Read String (max. 128 chars)	Click to activate the **Text Entry Tool** and create a string to be displayed in case of Multiple Read Message. Click **Submit** to save your text to the origin window text field, or click **Cancel** to return to origin window without transferring text. This parameter is only available when **Multiple Read Message** is enabled and the **No Read Message** selection is different from Local No Read(s) String. It is possible to select either the ASCII or HEX value. If **disabled**, the scanner transmits the first code read.
Send All Multiple Read Labels	For **Advanced Data Format** only, by enabling this parameter all multiple read labels will be included in the output message. They can be separated by the **Multiple Read Separator**. **Multiple Read Label Separator String (max. 128 chars):** The Multiple Read Label Separators (up to 128 bytes) are used to separate multiple read barcodes in the reading phase. This is meaningful when the Code Combination parameter is set to Multi Label or Logical Combination and the Send All Multiple Read Labels parameter has been enabled. If selected, they occur within the Code Field and are transmitted after each decoded multiple read barcode.
WebSentinel - Partial Read Is Treated As	Select **No Read**, **Good Read**, or **Partial Read** from the drop-down list. This determines how WebSentinel will treat the partial read.

Multi Filters Select the check box to display the **Multi-Filter Settings** options.

Multi-Filter Settings	
Contained Filter	Select the check box to reveal the **Max Number of Different Characters** field. When checked, this filter attempts to eliminate false multiple reads by determining if a short code read is "contained in" (is a sub-string of), another longer code read. This condition implicates that the short code is probably a misread of the same longer code and therefore should be ignored, (should not be considered as a multiple read of a different code). This filter is based upon the following rules: • a multiple read condition occurs • all decoded codes of the same type are compared with each other **Rule 1**: the shorter code is considered contained in the longer code if the character string is found in the same order; the longer code may have a single block of characters in any position (before, after or in between the compared strings) Example: The code **123456** is considered contained in the following codes: 00123456, 12345600, 12378456. The code **123456** is not considered contained in the following codes: 1234**65**07 (string out of order), 12345**700** (string not complete), 12**0**3**78**456 or **00**12345**00** (multiple blocks in the string). **Rule 2**: the shorter code is not filtered by rule 1. In the longer code, all possible sub-strings of the same length as the shorter code string are compared with the shorter code string. The shorter code is considered contained in the longer code if the number of different characters between the compared codes is less than or equal to the Max Number of Different Characters. The shorter code will be filtered by rule 2. **Example:** If Max Number of Different Characters = 1: The code 123456 is considered contained in the following codes: 12305600, 00123056, 88123056**88** because there is only one different character in the compared string. The code 123456 is not considered contained in 123066789 because there are two different characters in the compared string. **CAUTION:** If the Contained Filter parameter is used when **Message Tx Selection** *(see section 4.5.6)* is set to **On Decoding**, the filter conditions may be satisfied before the reading phase ends resulting in possible successive multiple read errors.
Max Number of Different Characters	Enter a value from 0 to 5 in the field provided to define the maximum number of different characters allowed to still consider a code as being included in another one and therefore to be filtered. If the number of different characters between the compared codes exceeds the

value of this parameter, the codes are considered as different and will not be filtered (a multiple read of a different code occurs).

If the number of different characters between the compared codes is less than or equal to the value of this parameter, the short code is considered as a sub-string of the longer code and will be filtered (no multiple read occurs).

Examples:

If Max Number of Different Characters = 2:
The code **123456** read once, is considered the same as the following codes read multiple times: 1**3**3**0**56, 123**54**6, 12345**7** because there are two or less different characters by position in the compared codes.

The code **123456** read once, is not considered the same as the following codes read multiple times: 1**5**3**24**6, 1**0**3**0**5**7**, **654321** because there are at least three different characters by position in the compared codes.

Voting Filter

Select the check box to reveal the **Max Number of Different Characters** field.

When checked, this filter attempts to eliminate false multiple reads by comparing the number of different characters by position between two codes of the same type and length. This condition implicates that reading a code of the same type and length having very few different characters is probably a misread of the code itself and therefore the code read the least number of times should be ignored, (should not be considered as a multiple read of a different code).

This filter is based upon the following rules:

- a multiple read condition occurs;
- the two codes are of the same type;
- the two codes have the same length;
- the number of different characters by position is equal to or less than the number defined by the **Max Number of Different Characters** parameter;
- **Message Tx Selection** *(see section 4.5.6)* must be set to **After Reading Phase Off**.

Filter Out Low Height Codes

Select the check box to reveal the **Minimum Readings Difference Between Scanners** field**.**

Background: This option was developed for the airports systems where there are often tall bar height codes and low bar height codes with the same content attached to baggage. Travelers will often remove the large, tall bar height code, while leaving the smaller, low bar height codes attached to the bag. The next time they travel they may have multiple low bar height codes on their baggage plus the new tall bar height and low bar height codes for the new trip.

This option instructs the system to ignore low bar height codes, which are likely read only once or twice, in favor of tall bar height codes, which will likely be read multiple times.

This is used in tunnel applications where multiple barcodes are read and there is a need to filter out one of the barcodes. If less than *x* number of scanners read the barcode, then it will be considered a NOREAD for that code.

Minimum Readings Difference Between Scanners	Enter the minimum number of scanners that must read a barcode for it to be considered a valid read.
Filter Out Single Readings	With the check box selected, if only 1 scanner reads a code it will be considered a NOREAD.
Strip Filter	Select the check box to display the **Strip Filter Settings** options. This is a second level filter that when enabled allows eliminating characters not managed by the host.
Strip Filter Settings	
Strip All Non Printable Chars	Select the check box to remove all non- printable ASCII characters from the code (000-020 and 127).
Char(s) to be Stripped	Click to activate the **Text Entry Tool** and enter specific characters to be stripped from the code. Click **Submit** to save your text to the origin window text field, or click **Cancel** to return to origin window without transferring text.
Strip Filter Collapse	Select the check box to remove the stripped characters from the code and, therefore, reduce the code length (collapsed). It can even be null.
Replacement Char	Click to activate the **Text Entry Tool** and enter the substitution character to replace all the stripped ones. Click **Submit** to save your text to the origin window text field, or click **Cancel** to return to origin window without transferring text.

2. When you have finished making changes, click **Update** to save or click **Reset** to revert to the previously saved values.

Barcode Configuration > Code Collection

When **Code Collection** has been selected from the **Code Combination** drop-down list, the Barcode Configuration window reveals related input fields.

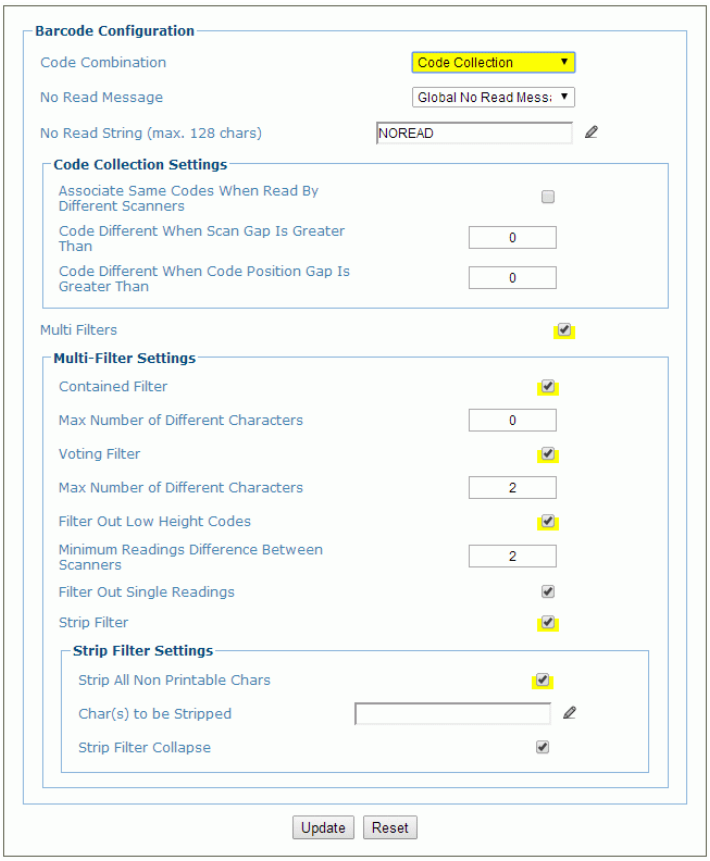

1. Enter the appropriate information in the form as described below:

Field Name	Action/Definition
Code Combination	**Code Collection** has been selected.
No Read Message	Select **Disable No Read Message**, **Global No Read Message**, or **Local No Read(s) Message** from the drop-down list. The No Read condition occurs whenever a code cannot be read or decoded. • **Disable No Read Message**: The No Read Message is not transmitted. • **Global No Read Message**: The No Read String will be sent if the scanner is unable to decode one or more barcodes in the reading phase. • **Local No Read(s) Message**: This option is useful when one or more codes are not read in the reading phase or when more codes than the expected number set by the configuration parameters are read. If working in **Standard Multi Label** mode, this option activates the **Code Label Local No Read String** and the **Code Label Local Multiple Read String** parameters which allow setting a **Local No Read String** and a **Local Multiple** string for each defined code symbology.

No Read String (max. 128 chars)	Click to activate the **Text Entry Tool** and create a string to be displayed when **Global No Read Message** is selected from the **No Read Message** drop-down list. Click **Submit** to save your text to the origin window text field, or click **Cancel** to return to origin window without transferring text.
Multi Filters	Select the check box to display the **Multi-Filter Settings** options.

Code Collection Settings

Associate Same Codes When Read By Different Scanners	Select the check box to enable this function. This parameter is available only when the **Code Combination** parameter is set to *Code Collection* and the scanner role is *Master*. If enabled, it allows transmitting all codes belonging to the same programmed Slot (same symbology and content) but read by different scanners (including the Master) in a single instance. **Scanner Role:** • **Master SYNCHRONIZED**: The scanner is connected as a Master in a master/slave synchronized configuration. • **Slave SYNCHRONIZED**: The scanner is connected as a Salve in a master/slave synchronized configuration. (See note below.) • **Other**: This selection is for a stand-alone scanner.
Code Different When Scan Gap Is Greater Than	This parameter is available only when the **Code Combination** parameter is set to **Code Collection**. If the number of scans performed between two consecutive codes read (by the Master or Stand Alone scanner) is greater than the defined number, the codes will be considered as different. The parameter set to 0 means the filter is disabled: when there is no scan gap all the consecutive codes read will be considered as only one code. 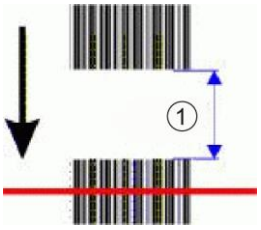 1 Scan Gap
Code Different When Code Position Gap Is Greater Than	This parameter is available only when the **Code Combination** parameter is set to Code Collection. If the position gap between two consecutive codes read (by the Master or Stand Alone scanner) on the same scan line is greater than the defined gap number, the codes will be considered as different. The parameter set to 0 means the filter is disabled: when there is no code position gap all the consecutive codes read will be considered as only one code. 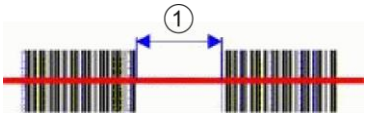 1 Code Position Gap

Multi-Filter Settings	
Contained Filter	Select the check box to reveal the **Max Number of Different Characters** field. When checked, this filter attempts to eliminate false multiple reads by determining if a short code read is "contained in" (is a sub-string of), another longer code read. This condition implicates that the short code is probably a misread of the same longer code and therefore should be ignored, (should not be considered as a multiple read of a different code). This filter is based upon the following rules: • a multiple read condition occurs • all decoded codes of the same type are compared with each other **Rule 1**: the shorter code is considered contained in the longer code if the character string is found in the same order; the longer code may have a single block of characters in any position (before, after or in between the compared strings) Example: The code **123456** is considered contained in the following codes: 00123456, 12345600, 12378456. The code **123456** is not considered contained in the following codes: 1234**65**07 (string out of order), 12345**700** (string not complete), 12**0**3**78**456 or **00**12345**00** (multiple blocks in the string). **Rule 2**: the shorter code is not filtered by rule 1. In the longer code, all possible sub-strings of the same length as the shorter code string are compared with the shorter code string. The shorter code is considered contained in the longer code if the number of different characters between the compared codes is less than or equal to the Max Number of Different Characters. The shorter code will be filtered by rule 2. Example: If Max Number of Different Characters = 1: The code 123456 is considered contained in the following codes: 12305600, 00123056, 88123056 88 because there is only one different character in the compared string. The code 123456 is not considered contained in 123066789 because there are two different characters in the compared string. **CAUTION:** If the Contained Filter parameter is used when **Message Tx Selection** *(see section 4.5.6)* is set to **On Decoding**, the filter conditions may be satisfied before the reading phase ends resulting in possible successive multiple read errors.
Max Number of Different Characters	Enter a value from 0 to 5 in the field provided to define the maximum number of different characters allowed to still consider a code as being included in another one and therefore to be filtered. If the number of different characters between the compared codes exceeds the value of this parameter, the codes are considered as different and will not be filtered (a multiple read of a different code occurs).

If the number of different characters between the compared codes is less than or equal to the value of this parameter, the short code is considered as a sub-string of the longer code and will be filtered (no multiple read occurs).

Examples:

If Max Number of Different Characters = 2:
The code **123456** read once, is considered the same as the following codes read multiple times: 1**3**3**0**56, 123**54**6, 12345**7** because there are two or less different characters by position in the compared codes.

The code **123456** read once, is not considered the same as the following codes read multiple times: 1**5**3**24**6, 1**0**3**0**5**7**, **654321** because there are at least three different characters by position in the compared codes.

Voting Filter

Select the check box to reveal the Max Number of Different Characters field. When checked, this filter attempts to eliminate false multiple reads by comparing the number of different characters by position between two codes of the same type and length. This condition implicates that reading a code of the same type and length having very few different characters is probably a misread of the code itself and therefore the code read the least number of times should be ignored, (should not be considered as a multiple read of a different code).

This filter is based upon the following rules:

- a multiple read condition occurs;
- the two codes are of the same type;
- the two codes have the same length;
- the number of different characters by position is equal to or less than the number defined by the **Max Number of Different Characters** parameter;
- **Message Tx Selection** *(see section 4.5.6)* must be set to **After Reading Phase Off**.

Filter Out Low Height Codes

Select the check box to reveal the **Minimum Readings Difference Between Scanners** field**.**

Background: This option was developed for the airports systems where there are often tall bar height codes and low bar height codes with the same content attached to baggage. Travelers will often remove the large, tall bar height code, while leaving the smaller, low bar height codes attached to the bag. The next time they travel they may have multiple low bar height codes on their baggage plus the new tall bar height and low bar height codes for the new trip.

This option instructs the system to ignore low bar height codes, which are likely read only once or twice, in favor of tall bar height codes, which will likely be read multiple times.

This is used in tunnel applications where multiple barcodes are read and there is a need to filter out one of the barcodes. If less than *x* number of scanners read the barcode, then it will be considered a NOREAD for that code.

Minimum Readings Difference Between Scanners

Enter the minimum number of scanners that must read a barcode for it to be considered a valid read.

Filter Out Single Readings	With the check box selected, if only 1 scanner reads a code it will be considered a NOREAD.
Strip Filter	Select the check box to display the **Strip Filter Settings** options. This is a second level filter that when enabled allows eliminating characters not managed by the host.

STRIP FILTER SETTINGS	
Strip All Non Printable Chars	Select the check box to remove all non- printable ASCII characters from the code (000-020 and 127).
Char(s) to be Stripped	Click to activate the **Text Entry Tool** and enter specific characters to be stripped from the code. Click **Submit** to save your text to the origin window text field, or click **Cancel** to return to origin window without transferring text.
Strip Filter Collapse	Select the check box to remove the stripped characters from the code and, therefore, reduce the code length (collapsed). It can even be null.
Replacement Char	Click to activate the **Text Entry Tool** and enter the substitution character to replace all the stripped ones. Click **Submit** to save your text to the origin window text field, or click **Cancel** to return to origin window without transferring text.

2. When you have finished making changes, click **Update** to save or click **Reset** to revert to the previously saved values.

4.5.4 Modify Settings | Global Settings | Serial Ports

Use the Serial Ports menu tree selections during initial setup to configure any serial ports used by your barcode scanning system. If necessary, you can later make modifications to the global system settings using the same menu selections, including:

Modify Settings | Global Settings | Serial Ports | Main Port

Use **Main Port** window to configure communication between the scanner and the Host, or in a multi-sided layout, between several scanners and a Host.

To edit the Main Port settings:

1. In the tree menu under **Modify Settings**, navigate to **Global Settings | Serial Ports | Main Port**. The Main Port window opens.

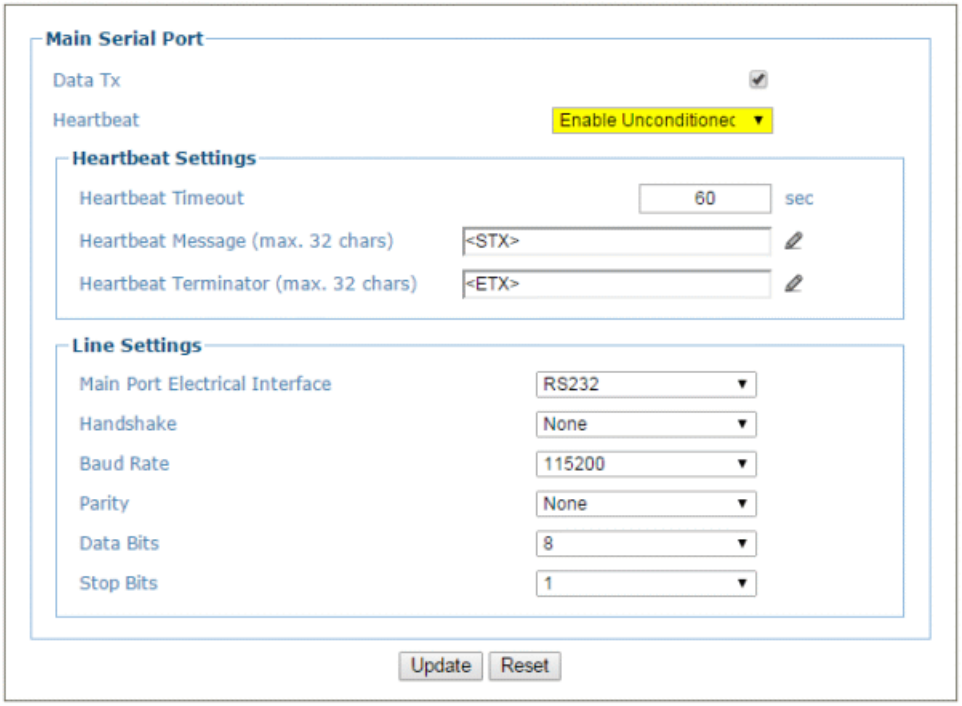

2. Enter the appropriate information in the form as described below:

Field Name	Action/Definition
Data Tx	Select the check box to enabled **Data Tx**. If selected, the **Main Serial Port** channel is used by the scanner to transmit data and/or messages.
Heartbeat	Select **Disable**, **Enable Unconditioned**, or **Enable Conditioned** from the drop-down list. This parameter is available when the **Data TX** parameter is checked. It enables/disables the transmission of the Heartbeat message signaling that the device is still active. • **Disable**: The Heartbeat message is not transmitted • **Enable Unconditioned**: The Heartbeat message is always transmitted, even if communication is still active • **Enable Conditioned**: The Heartbeat message is transmitted only when there is no communication
	Heartbeat Settings
Heartbeat Timeout	Enter a time value in seconds to define the amount of time between two message transmissions. If the input timeout expires and no transmission has occurred, the Heartbeat message will be transmitted.
Heartbeat Message (max. 32 chars)	Click to activate the Text Entry Tool and create heartbeat header text to signal the beginning of the heartbeat message. Characters from NUL (00H) to ~ (7EH) can be used. Click **Submit** to save your text to the origin window text field, or click **Cancel** to return to origin window without transferring text. The **Heartbeat Message** (header) string must be different from the **Heartbeat Terminator** string.
Heartbeat Terminator (max. 32 chars)	Click to activate the Text Entry Tool and create **Heartbeat Terminator** text to signal the end of the heartbeat message. Characters from NUL (00H) to ~ (7EH) can be used. Click **Submit** to save your text to the origin window text field, or click **Cancel** to return to origin window without transferring text. The **Heartbeat Terminator** string must be different from the **Heartbeat Message** (header) string.
	Line Settings
Main Port Electrical Interface	Select **RS232** or **RS422 full duplex** from the drop-down list. The Main serial interface is compatible with these available electrical standards.
Handshake	Select **None**, **Hardware (RTS/CTS)**, or **Software (Xon/Xoff)** from the drop-down list. Handshake is a communication control used to protect against data loss, it can be achieved via hardware (RTS\CTS protocol) or software (Xon\Xoff protocol).
Baud Rate	Select a value from **1200** to **115200** from the drop-down list. **Baud Rate** is the transmission speed in a communication line.

Parity	Select **None**, **Odd**, or **Even** from the drop-down list. **Parity** is a parameter indicating the presence of a control bit in the communication protocol frame.
Data Bits	Select **7** or **8** from the drop-down list. **Data Bits** is a parameter indicating the number of bits composing the data packet of the communication protocol frame.
Stop Bits	Select **1** or **2** from the drop-down list. **Stop Bits** is a parameter indicating the number of stop bits in the data packet of the communication protocol frame.

3. When you have finished making changes, click **Update** to save or click **Reset** to revert to the previously saved values.

Modify Settings | Global Settings | Serial Ports | Aux Port

Use the **Aux Port** window to configure communication through the Auxiliary Serial Port. For this communication mode, RS232 interface is automatically selected.

To edit the Aux Port settings:

1. In the tree menu under **Modify Settings**, navigate to **Global Settings | Serial Ports | Aux Port**. The Aux Port window opens.

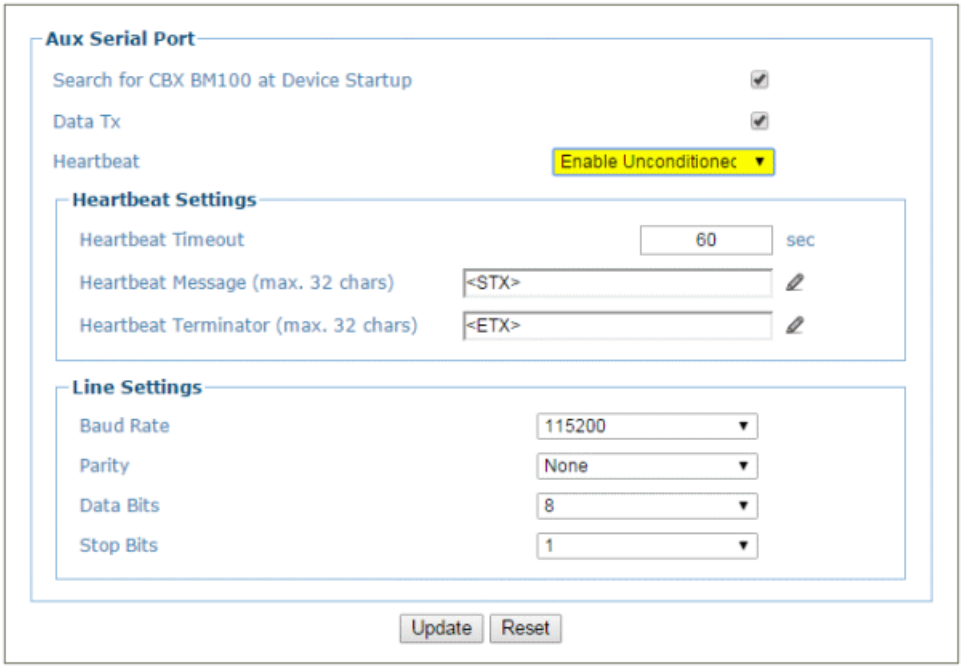

2. Enter the appropriate information in the form as described below:

Field Name	Action/Definition
Search for MA BM100 at Device Startup	Select the check box to automatically search for a BM100 storage module when the scanner is powered on.
Data Tx	Select the check box to enabled **Data Tx**. If selected, the **Aux Serial Port** channel is used by the scanner to transmit data and/or messages.
Heartbeat	Select **Disable**, **Enable Unconditioned**, or **Enable Conditioned** from the drop-down list. This parameter is available when the **Data TX** parameter is checked. It enables/disables the transmission of the Heartbeat message signaling that the device is still active. • **Disable**: The Heartbeat message is not transmitted • **Enable Unconditioned**: The Heartbeat message is always transmitted, even if communication is still active • **Enable Conditioned**: The Heartbeat message is transmitted only when there is no communication
	Heartbeat Settings
Heartbeat Timeout	Enter a time value in seconds to define the amount of time between two message transmissions. If the input timeout expires and no transmission has occurred, the Heartbeat message will be transmitted.
Heartbeat Message (max. 32 chars)	Click to activate the **Text Entry Tool** and create **Heartbeat Header** text to signal the beginning of the heartbeat message. Characters from NUL (00H) to ~ (7EH) can be used. Click **Submit** to save your text to the origin window text field, or click **Cancel** to return to origin window without transferring text. The **Heartbeat Message** (header) string must be different from the **Heartbeat Terminator** string.
Heartbeat Terminator (max. 32 chars)	Click to activate the **Text Entry Tool** and create **Heartbeat Terminator** text to signal the end of the heartbeat message. Characters from NUL (00H) to ~ (7EH) can be used. Click **Submit** to save your text to the origin window text field, or click **Cancel** to return to origin window without transferring text. The **Heartbeat Terminator** string must be different from the **Heartbeat Message** (header) string .
	Line Settings
Baud Rate	Select a value from **1200** to **115200** from the drop-down list. **Baud Rate** is the transmission speed in a communication line.
Parity	Select **None**, **Odd**, or **Even** from the drop-down list. **Parity** is a parameter indicating the presence of a control bit in the communication protocol frame.
Data Bits	Select **7** or **8** from the drop-down list. **Data Bits** is a parameter indicating the number of bits composing the data packet of the communication protocol frame.

Stop Bits	Select **1** or **2** from the drop-down list. **Stop Bits** is a parameter indicating the number of stop bits in the data packet of the communication protocol frame.

3. When you have finished making changes, click **Update** to save or click **Reset** to revert to the previously saved values.

4.5.5 Modify Settings | Global Settings | Ethernet

Use the **Ethernet** menu tree selections during initial setup to configure the Ethernet settings for your barcode scanning system.

Ethernet is the most popular physical layer LAN technology in use today. It is the IEEE 802.3 series standard, based on the CSMA/CD access method that provides two or more stations to share a common cabling system. This access method, Carrier Sense Multiple Access with Collision Detection, is the basis for Ethernet systems providing a wide range of speed.

The design goals for Ethernet are to create a simply defined topology that makes efficient use of shared resources that are easy to reconfigure and maintain and provides compatibility across many manufacturer and systems.

Ethernet supports many different network protocols; Leuze electronic scanners support IP plus TCP or UDP over Ethernet and 802.3 frame format as Ethernet protocol low level.

If necessary, you can later make modifications to the global system settings using the same menu selections, including:

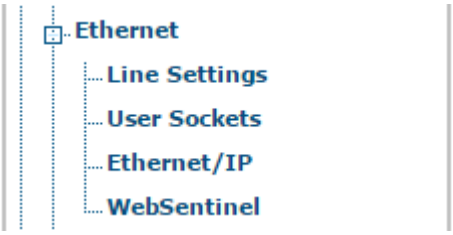

Modify Settings | Global Settings | Ethernet | Line Settings

Use the **Line Settings** window to define and report the fundamental information about the system.

To edit the Line Settings:

1. In the tree menu under Modify Settings, navigate to Global Settings | Ethernet | Line Settings. The Line Settings window opens.

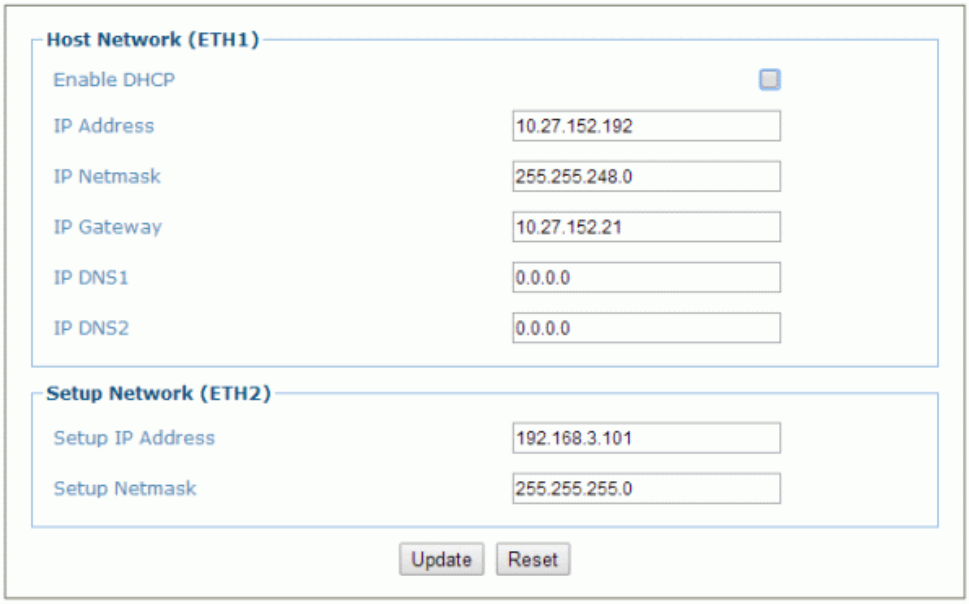

2. Enter the appropriate information in the form as described below:

Field Name	Action/Definition
	Host Network (ETH1)
Enable DHCP	Select the check box to cause the IP address parameters to become inactive. They are then used to display the addresses assigned by a DHCP server when getting the scanner configuration.
IP Address	Enter the device Internet Protocol (IP) network address in the field provided. Consult your network administrator to obtain a new address.
IP Netmask	Enter the device subnet mask address in the field provided. Consult your network administrator to obtain a new address.
IP Gateway	Enter the device gateway address in the field provided. Consult your network administrator to obtain a new address.
IP DNS1	Enter the address of the Primary Domain Name System (DNS) in the field provided.
IP DNS2	Enter the address of the Secondary Domain Name System (DNS) in the field provided.

Setup Network (ETH2)	
Setup IP Address	Enter the Internet Protocol (IP) network address for ETH2 (Setup) in the field provided. Consult your network administrator to obtain a new address.
Setup Netmask	Enter the subnet mask address for ETH2 (Setup) in the field provided. Consult your network administrator to obtain a new address.

3. When you have finished making changes, click **Update** to save or click **Reset** to revert to the previously saved values.

Modify Settings | Global Settings | Ethernet | User Sockets

Use the **User Sockets** (User Socket Settings) window to setup, edit, and configure numbered user sockets for your barcode scanning system. User sockets are another interface available for the Ethernet communication.

To edit the User Socket settings:

1. In the tree menu under **Modify Settings**, navigate to **Global Settings | Ethernet | User Sockets**. The User Sockets window opens.

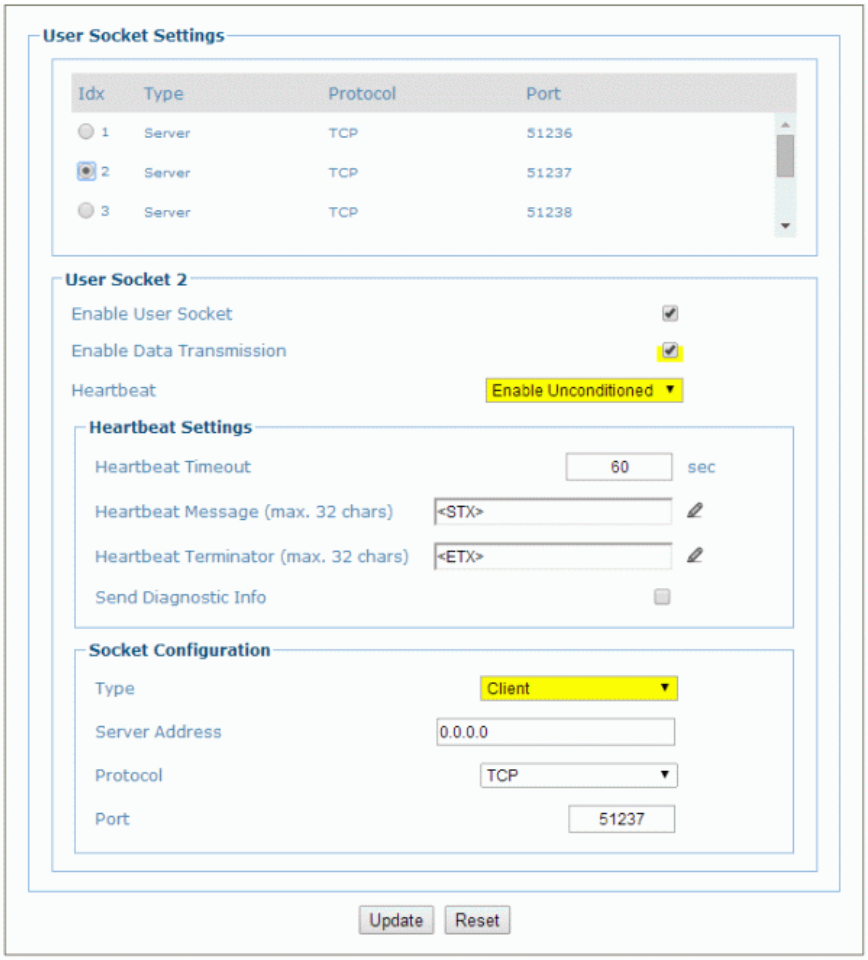

2. Enter the appropriate information in the form as described below:

Field Name	Action/Definition
User Socket List	Select an option button in the list at the top of this window to create a new user socket, or to edit an existing one.

USER SOCKET *N*	
Enable User Socket	Select the check box to enable **User Sockets** and reveal the related configuration options.
Enable Data Transmission	Select the check box to enable **User Sockets** and reveal the related configuration options. When enabled, **Ethernet User Socket** is selected as the channel to be used by the scanner for transmitting data and/or messages.
Heartbeat	Select **Disable**, **Enable Unconditioned**, or **Enable Conditioned** from the drop-down list. This parameter is available when the **Data TX** parameter is checked. It enables/disables the transmission of the Heartbeat message signaling that the device is still active. • **Disable**: The Heartbeat message is not transmitted • **Enable Unconditioned**: The Heartbeat message is always transmitted, even if communication is still active • **Enable Conditioned**: The Heartbeat message is transmitted only when there is no communication
Heartbeat Settings	
Heartbeat Timeout	Enter a time value in seconds to define the amount of time between two message transmissions. If the input timeout expires and no transmission has occurred, the Heartbeat message will be transmitted.
Heartbeat Message (max. 32 chars)	Click to activate the **Text Entry Tool** and create heartbeat header text to signal the beginning of the heartbeat message. Characters from NUL (00H) to ~ (7EH) can be used. Click **Submit** to save your text to the origin window text field, or click **Cancel** to return to origin window without transferring text. The **Heartbeat Message** (header) string must be different from the **Heartbeat Terminator** string.
Heartbeat Terminator (max. 32 chars)	Click to activate the **Text Entry Tool** and create **Heartbeat Terminator** text to signal the end of the heartbeat message. Characters from NUL (00H) to ~ (7EH) can be used. Click **Submit** to save your text to the origin window text field, or click **Cancel** to return to origin window without transferring text. The **Heartbeat Terminator** string must be different from the **Heartbeat Message** (header) string.
Socket Configuration	
Type	Select **Server** or **Client** from the drop-down list to define the type of the socket: • **Server**: The station waits for connections and can communicate with a maximum of 3 clients simultaneously • **Client**: The station tries a connection towards the server
Server Address	Enter the IP address of the server to which the client tries to connect. This parameter is available only when the socket is configured as a **Client**.

Protocol Select **TCP** (Transmission Control Protocol) or **UDP** (User Datagram Protocol) from the drop-down list to define the protocol to be used for the Ethernet communication.

NOTE: When using the **UDP** protocol:

- The User Socket Client Port is bound to the Server Port.
- The maximum size for maintaining a whole datagram is 1436 bytes, messages exceeding this value will be fragmented.

Port Enter the port number of the socket.

3. When you have finished making changes, click **Update** to save or click **Reset** to revert to the previously saved values.

Modify Settings | Global Settings | Ethernet | Ethernet/IP

Use the **Ethernet I/P** window to set up digital inputs and outputs for the barcode scanner.

To enable or disable Ethernet/IP:

1. In the tree menu under **Modify Settings**, navigate to **Global Settings | Ethernet | Ethernet/IP**. The **Ethernet/IP** window opens.

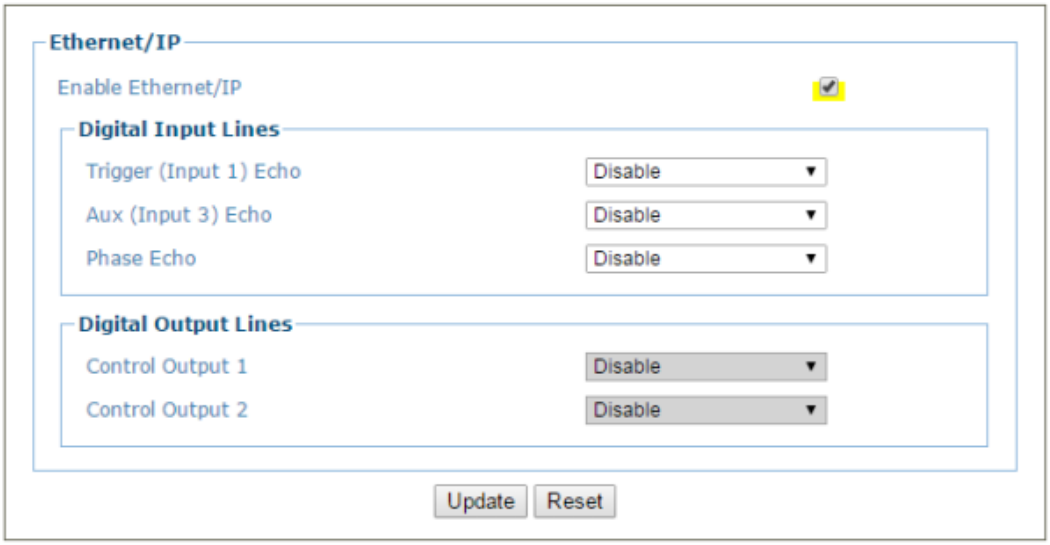

2. Enter the appropriate information in the form as described below:

Field Name	Action/Definition
Enable Ethernet/IP	Select the check box to enable **Ethernet/IP** and reveal the related configuration options.
	Digital Input Lines
Trigger (Input 1) Echo	Select **Disable** or **Enable** from the drop-down list. Select **Enable** to echo the status of scanner **Input 1** to the Ethernet Client via bit 0 in Byte 0 (LSB) of the Input Area.
Aux (Input 3) Echo	Select **Disable** or **Enable** from the drop-down list. Select **Enable** to echo the status of scanner **Input 3** to the Ethernet Client via bit 1 in Byte 0 (LSB) of the Input Area.
Phase Echo	Select **Disable** or **Enable** from the drop-down list. Select **Enable** to echo the scanner **Reading Phase** status to the Ethernet Client via bit 7 in Byte 0 (LSB) of the Input Area.
	Digital Output Lines
Output 1	Select **Disable** or **Enable** from the drop-down list. Select **Enable** to allow the Ethernet Client to drive the scanner **Output 1** via bit 0 in Byte 0 (LSB) of the Output Area.
Output 2	Select **Disable** or **Enable** from the drop-down list. Select **Enable** to allow the Ethernet Client to drive the scanner **Output 2** via bit 1 in Byte 0 (LSB) of the Output Area.

3. When you have finished making changes, click **Update** to save or click **Reset** to revert to the previously saved values.

Modify Settings | Global Settings | Ethernet | WebSentinel

Use the **WebSentinel**™ window to enable and configure the barcode scanner for use with WebSentinel.

To enable or disable WebSentinel:

1. In the tree menu under **Modify Settings**, navigate to **Global Settings | Ethernet | WebSentinel**. The WebSentinel window opens.

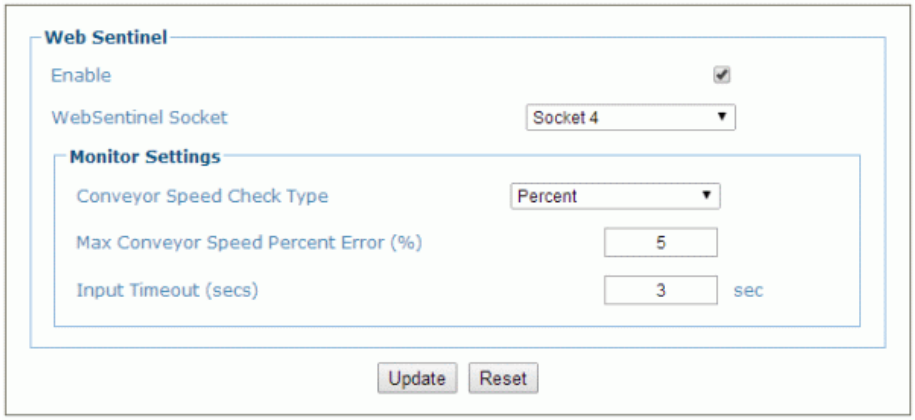

2. Enter the appropriate information in the form as described below:

Field Name	Action/Definition
Enable	Select the check box to enable **WebSentinel** and reveal the related configuration options.
WebSentinel Socket	Select a socket number for WebSentinel from those available in the drop-down list.
	Monitor Settings
Conveyor Speed Check Type	Select **Percentage** or **Absolute** from the drop-down list to determine how the conveyor speed is evaluated.
Max Conveyor Speed Percent Error (%)	In the text field provided, enter the percentage of discrepancy allowed in the conveyor speed before an error is sent. This option is available when **Percentage is** selected from the **Conveyor Speed Check Type drop-down list.**
Max Conveyor Speed Absolute Error (mm/s)	In the text field provided, enter the milliseconds of discrepancy allowed in the conveyor speed before an error is sent. This option is available when **Absolute** is selected from the **Conveyor Speed Check Type drop-down list.**
Input Timeout (secs)	Enter a time interval in seconds, after which the input will be checked for errors. If an error is found, it will be sent to WebSentinel.

3. When you have finished making changes, click **Update** to save or click **Reset** to revert to the previously saved values.

4.5.6 Modify Settings | Global Settings | Messaging

Use the Messaging selections during initial setup to configure system messaging for your **BCL 900i barcode scanner**. If necessary, you can later make modifications to the configuration using the same menu selections, including:

Modify Settings | Global Settings | Messaging | Message Format

Use the **Message Format** window to configure Standard or Advanced system messages.

To edit the Message Format settings:

1. In the tree menu under **Modify Settings**, navigate to **Global Settings | Messaging | Message Format**. The **Message Format** window opens.

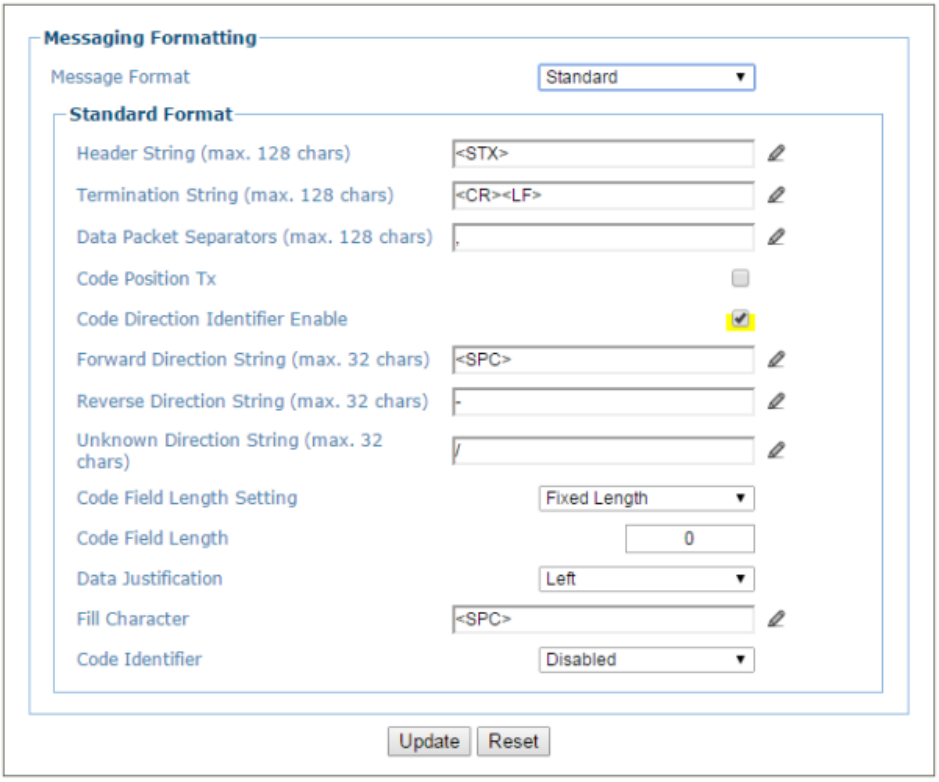

2. Enter the appropriate information in the form as described below:

Messaging Formatting	
Message Format	Select Standard or Advanced **from the Format Type drop-down list.**
Message Tx Selection	Select **On Decoding** or **After Reading Phase Off** from the drop-down list. **Message Tx** selects the transmission of the output message on decoding or after the reading phase as illustrated below.

Data TX on decoding

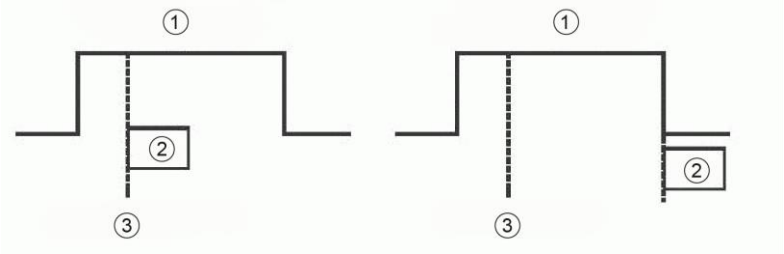

Data TX after Reading Phase Off

1 Reading Phase
2 Code
3 Decoding Time

NOTE: This option is only available when an **Operating Mode** of **On Line** is selected in **Modify Settings | Global Settings | Operating Mode**.

Max. Tx Delay after Phase Off	Select **Disabled** or a millisecond value (50 to 500 msec) from the drop-down list. This parameter defines a timeout, which is the maximum delay allowable for message transmission after the reading phase is closed. If this timeout expires before message transmission, the message will be discarded.

NOTE: This option is only available when an **Operating Mode** of **On Line** is selected in **Modify Settings | Global Settings | Operating Mode**.

Header Tx Start

Select **With Data** or **After Reading Phase On** from the drop-down list. If **With Data** is selected, the header will be transmitted with data. If **After Reading Phase On** is selected, the header will be transmitted after the reading phase activation. See illustration below:

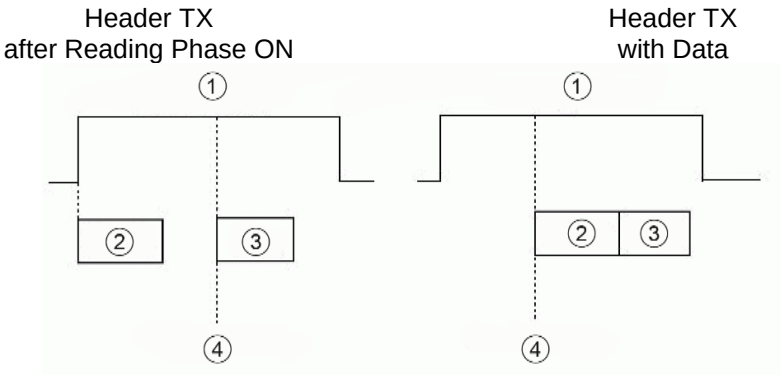

1 Reading Phase
2 Header
3 Code
4 Decoding Time

NOTE: This option is only available when an **Operating Mode** of **On Line** is selected in **Modify Settings | Global Settings | Operating Mode**.

Termination After No Read Message

Select **Enable** or **Disable** from the drop-down list. If **Enable** is selected, a termination string is added to the No Read message string.

NOTE: This option is only available when an **Operating Mode** of **On Line** is selected in **Modify Settings | Global Settings | Operating Mode**.

Format Type: Standard

Header String (max. 128 chars)

Click to activate the **Text Entry Tool** and create a **Header String** in the text field provided. Headers (up to 128 bytes) can be defined and transmitted as a block preceding the barcode(s). Use characters from NUL (00H) to ~ (7EH).

Click **Submit** to save your text to the origin window text field, or click **Cancel** to return to origin window without transferring text.

Termination String (max. 128 chars)

Click to activate the **Text Entry Tool** and create a **Termination String** in the text field provided. Terminators (up to 128 bytes) can be defined and transmitted as a block following the barcode(s). Use characters from NUL (00H) to ~ (7EH). Click **Submit** to save your text to the origin window text field, or click **Cancel** to return to origin window without transferring text.

Data Packet Separators (max. 128 chars)	Click to activate the **Text Entry Tool** and create a **Data Packet Separators** in the text field provided. The **Data Packet Separators** (up to 128 bytes) are used to separate barcodes in the reading phase. Use characters from NUL (00H) to ~ (7EH). For this reason, it is very useful when the **Standard Multi Label**, **Code Collection** or **Code Combination** parameters have been selected in the **Barcode Configuration**. If selected, they occur within the **Code Field** and are transmitted after each decoded code. Click **Submit** to save your text to the origin window text field, or click **Cancel** to return to origin window without transferring text.
Code Position Tx	Select the check box to enable. If enabled, the code position information is included in the output data format.
Code Direction Identifier Enable	Select the check box to enable. If enabled, it allows you to define the forward and reverse strings indicating the scanning direction with respect to the code direction.
Forward Direction String (max. 32 chars)	Click to activate the **Text Entry Tool** and create a **Forward Direction String** in the text field provided. A **Forward Direction String** can be included in the output message to indicate that the current code has been scanned in the forward direction (scanning from left to right). This string ("+" is the default value) can be customized by the user including up to 32 characters. Click **Submit** to save your text to the origin window text field, or click **Cancel** to return to origin window without transferring text.
Reverse Direction String (max. 32 chars)	Click to activate the **Text Entry Tool** and create a **Reverse Direction String** in the text field provided. A **Reverse Direction String** can be included in the output message to indicate that the current code has been scanned in the reverse direction (scanning from right to left). The string ("-" is the default value) can be customized by the user including up to 32 characters. Click **Submit** to save your text to the origin window text field, or click **Cancel** to return to origin window without transferring text.
Unknown Direction String (max. 32 chars)	Click to activate the **Text Entry Tool** and create an **Unknown Direction String** in the text field. An **Unknown Direction String** can be included in the output message when it is not possible to determine the scanning direction of a code. The string ("?" is the default value) can be customized by the user including up to 32 characters. Click **Submit** to save your text to the origin window text field, or click **Cancel** to return to origin window without transferring text.
Code Field Length Setting	Select **Variable** or **Fixed** from the drop-down list. If **Variable** is chosen, all possible code field lengths (in number of characters/digits) allowed for the code selected are accepted. If **Fixed** is chosen, only the length defined by the Code Field Length parameter is accepted.

Code Field Length

This parameter is only available when **Fixed** is selected as the **Code Field Length Setting**. Enter length of the code field to be transmitted (in number of characters/digits) in the field provided.

Data Justification

This parameter is only available when **Fixed** is selected as the **Code Field Length Setting**. Select **Left** or **Right** from the drop-down list to define the position of the Fill Character within the code.

Fill Character

This parameter is only available when **Fixed** is selected as the **Code Field Length Setting**. Click to activate the **Text Entry Tool** and create a **Fill Character(s)**. The **Fill Character** is inserted into each character position of a code field that has more characters (as defined in the **Code Field Length**) than exist in the barcode read. Use characters from NUL (00H) to ~ (7EH).

Example:

For barcode "12345" with Fill Character "-" (2DH) and Code Field Length of 10 characters, the result of the different alignment will be:

Left aligned = ...<Code Identifier><12345----->...
Right aligned = ...<Code Identifier><-----12345>...

Click **Submit** to save your text to the origin window text field, or click **Cancel** to return to origin window without transferring text.

Code Identifier

Select **Disable**, **Standard AIM ID**, or **User Specified** from the drop-down list. A **Code Identifier** string can be included in the output message.

- If **Disable** is selected, no code identifier is included in the output message.
- If **Standard AIM ID** is selected, the AIM standard identifier is included in the output message
- If **User Specified** is selected, the **Code Identifier Strings** group is activated at the bottom of the window, allowing you to define an identifier string for each code symbology. The string will be included in the output message.

Code Identifier Strings

This section of the Message Format window is only available when **User Specified** is selected as the **Code Identifier**. Click to activate the Text Entry Tool and create a custom code identifier string for any listed code symbology. Click **Submit** to save your text to the origin window text field, or click **Cancel** to return to origin window without transferring text.

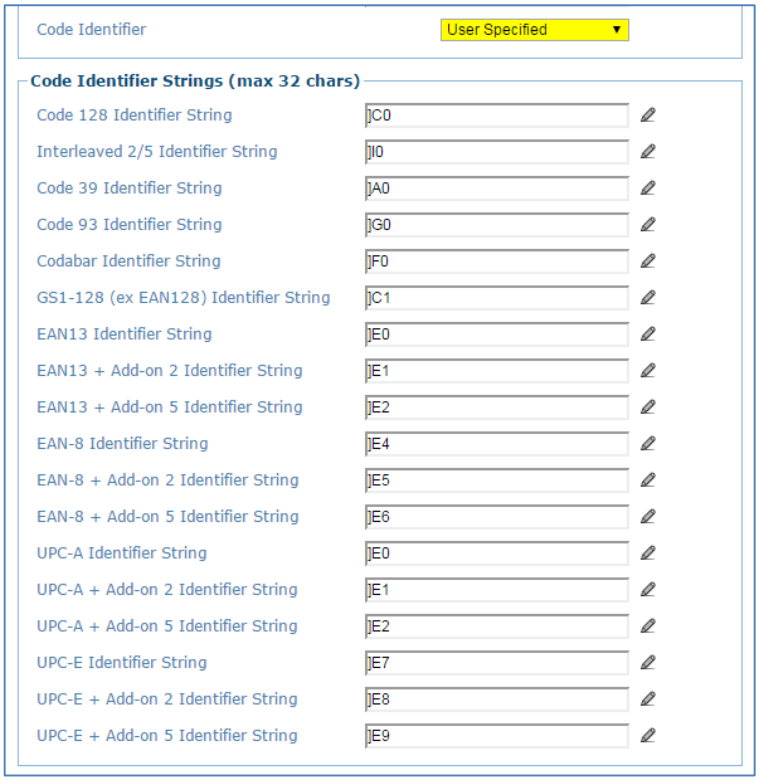

Format Type: Advanced

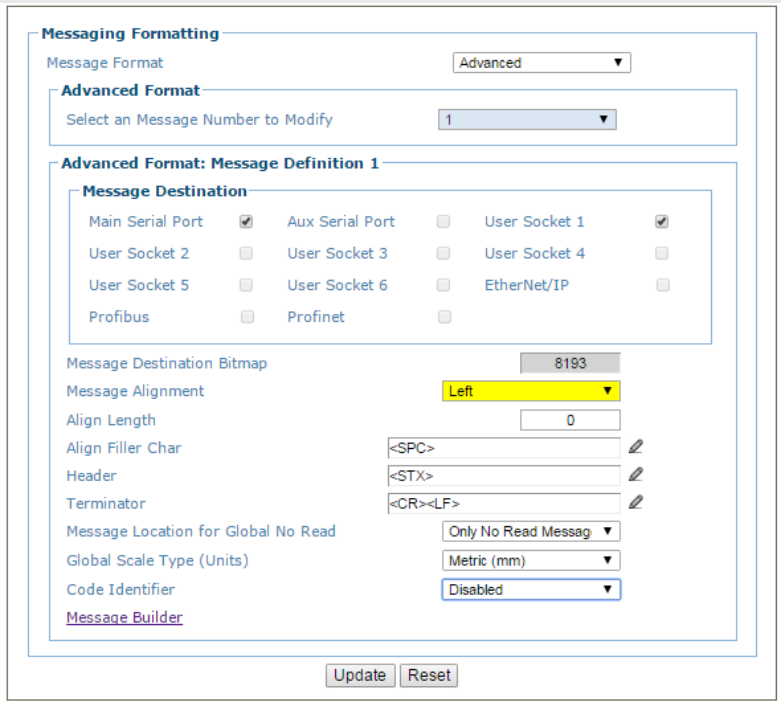

Select a Message Number to Modify	Select a numbered message you wish to modify from the drop-down list.
Advanced Format: Message Definition *n*	
Message Destination	Select the check box for each port or socket that should receive the message.
Message Destination Bitmap	Indicates the destination of the message.
Message Alignment	Select **None**, **Left**, or **Right** from the drop-down list.
Align Length	Enter the number of characters by which to extend the message when **Left** or **Right** is selected from the **Message Alignment** drop-down box.
Align Filler Char	Click to activate the **Text Entry Tool** and create a filler character in the text field provided. This filler is used to extend the **Align Length**.
Header	Click to activate the **Text Entry Tool** and create a **Header** in the text field provided. Headers (up to 128 bytes) can be defined and transmitted as a block preceding the barcode(s). Use characters from NUL (00H) to ~ (7EH). Click **Submit** to save your text to the origin window text field, or click **Cancel** to return to origin window without transferring text.

Terminator	Click to activate the Text Entry Tool and create a **Terminator** in the text field provided. Terminators (up to 128 bytes) can be defined and transmitted as a block following the barcode(s). Use characters from NUL (00H) to ~ (7EH). Click **Submit** to save your text to the origin window text field, or click **Cancel** to return to origin window without transferring text.
Global No Read Type	Select **Only No Read**, **Left**, or **Right** from the drop-down list.
Global Scale Type (Units)	Select **Metric (mm)** or **Imperial (0.1 in)** from the drop-down list.

Code Identifier

Select **Disable**, **Standard AIM ID**, or **User Specified** from the drop-down list. A **Code Identifier** string can be included in the output message.

- If **Disable** is selected, no code identifier is included in the output message.
- If **Standard AIM ID** is selected, the AIM standard identifier is included in the output message
- If **User Specified** is selected, the **Code Identifier Strings** group is activated at the bottom of the window, allowing you to define an identifier string for each code symbology. The string will be included in the output message.

Code Identifier Strings
This section of the Message Format window is only available when **User Specified** is selected as the **Code Identifier**. Click to activate the **Text Entry Tool** and create a custom code identifier string for any listed code symbology. Click **Submit** to save your text to the origin window text field, or click **Cancel** to return to origin window without transferring text.

3. When you have finished making changes, click **Update** to save or click **Reset** to revert to the previously saved values.

Modify Settings | Global Settings | Messaging | Message Builder

Use the **Message Builder** window to create Standard or Advanced system messages.

To use the Message Builder:

1. In the tree menu under Modify Settings, navigate to **Global Settings | Messaging | Message Builder**. The **Message Builder** window opens.

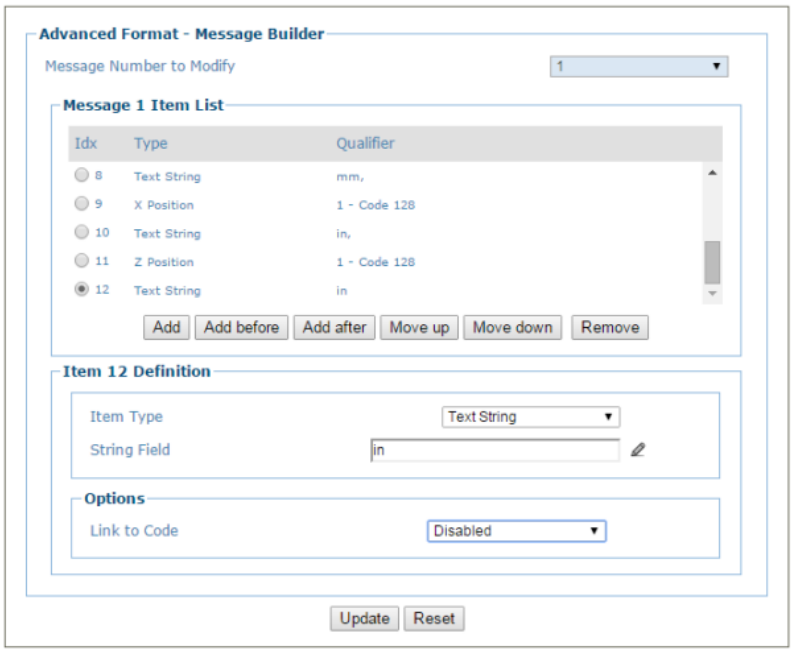

2. Enter the appropriate information in the form as described below:

Field Name	Action/Definition
Message Number to Modify	Select the number of the message you want to modify from the drop-down list.
	Message *n* Item List
Idx	Displays the index number of the messages.
Type	Displays the message type including various **Text String**, **Code Related Item**, or **Package Related Item** messages.
Qualifier	Displays relevant qualifiers for the message item if needed.
Add	Click to add a message item to the bottom of the list.
Add before	Click to add a message item above the currently selected message.
Add after	Click to add a message item below the currently selected message.

Move up	Click to move the selected message item up one level in the list.
Move down	Click to move the selected message item down one level in the list.
Remove	Click to remove the selected message item.

Item *n* Definition	
Item Type	Select **Text String**, **Code Related Item**, or **Package Related Item** from the drop-down list. Each selection reveals a unique set of options.
String Field	Click to activate the **Text Entry Tool** and create a text string message. This option is available when **Item Type > Text String** has been selected. Click **Submit** to save your text to the origin window text field, or click **Cancel** to return to origin window without transferring text.
Code Related Items	Select a code related item from those available in the drop-down list. This option is available when Item Type > Code Related Item has been selected. The **Code Related Items** can be associated to a specific programmed code or group label depending on the Code Combination selection. Selections Include: • **Barcode**: Barcode data • **Barcode Length**: Number of characters in code • **Read Bitmap**: 32-bit mask indicating which scanner in the network has read the code (when character <1> is present in the related position) • **Total Read Count**: Indicates how many times the code has been read by all scanners present in the network during the same reading phase • **Read Count (by device)**: Indicates the number of times the code has been read by one specific scanner present in the network during the reading phase (selectable among those present) • **X Position**: X coordinate for the code that was read • **Y Position**: Y coordinate for the code that was read • **Z Position**: Z coordinate for the code that was read • **Code Identifier**: Indicates type of code that was read • **Code Direction**: Indicates if the code has been read either from either the start character or the stop character • **Code Distance**: Indicates the distance to the code that was read • **Decode Mode**: Indicates if the code has been read using Linear or Reconstruction (CRT) reading mode • **Decode Scans Number**: Indicates the minimum number of decoded scans referred to the single characters in a code when the device is reading in Reconstruction mode. This Item can be used as Code Quality Index

- **Average Code Position**: Average position of the code in the scan line (Average of Minimum and Maximum Code Position)
- **Minimum Code Position**: Minimum position of the code in the scan line (closest to the left side/connector side of the scanner)
- **Maximum Code Position**: Maximum position of the code in the scan line (farthest from the left side/connector side of the scanner)
- **Ink Spread**: Indicates the calculated Ink Spread value
- **Encoder Value**: Indicates the encoder/tachometer pulse value from trigger to the code being read
- **Laser Number**: If more than one laser is present in the working device, this item indicates the laser used to read the code
- **Reading Persistence**: Indicates how many times the laser beam has crossed the complete code during the reading phase

Package Related Item

Select a package related item from those available in the drop-down list. This option is available when Item Type > Package Related Item has been selected.

Selections Include:

- **Package Sequence Number**: Indicates the sequential number assigned to the package.
- **Total Read Bitmap**: Indicates the complete reading mask related to all codes read during the reading phase
- **Failure Bitmap**: 32-bit mask indicating which devices in the network are in fault (when character <1> is present in the related position)
- **Total Read Count**: Indicates the sum of all Code-related Total Reading Counts of each code read during the reading phase
- **Read Count (by device)**: Indicates the number of codes read during the reading phase by the device
- **Minimum Code Distance**: Indicates the distance of the code closest to the device read during the reading phase
- **Maximum Code Distance**: Indicates the distance of the code most distant from the scanner that has been read during the reading phase
- **Decode Mode (Master)**: Indicates the programmed Reading Mode, either Linear or Reconstruction
- **Number of Rejected Codes**: Indicates the number of codes rejected during the internal analysis (unexpected code, multiple read, discarded by the programmed logical rule)
- **Package Length**: Indicates the approximate length of the package
- **Start Trigger Encoder Value**: Indicates the encoder/tachometer pulse value when the package first hits the trigger PS

	• **End Trigger Encoder Value**: Indicates the encoder/tachometer pulse value when the package exits the trigger PS • **Transmit Encoder Value**: Indicates the encoder/tachometer pulse value when the data transmit occurs • **Current Trigger Count**: Indicates the number of trigger cycles that have occurred • **Working Hours (By Device)**: Indicates the total number of hours the device has been active • **Total Good Reads**: Indicates the total number of barcodes successfully read • **Total No Reads**: Indicates the total number of barcodes that were not read • **Total Multi Reads**: Indicates the number of times packages carried more codes than the scanner is programed to read • **Total Partial Reads**: Indicates the total number of barcodes only partially read • **Protocol Index**: Indicates the programmed protocol index string data
Code/Group Selection	Select a Code/Group from those available in the drop-down list. This option is available when **Item Type > Code Related Item** has been selected.
Device Index	Select a device index number from the drop-down list. This option is available when I**tem Type > Code Related Item > Read Count (By Device) or Type > Package Related Items > Read Count (By Device)/Working Hours (By Device)** has been selected.
Text String: Options	
Link to Code	Select **Disabled**, **Previous Code**, or **Next Code** from the drop-down list. • **Disabled**: A code will not be linked to this text string • **Previous Code**: The text string will be linked to the previous generated code • **Next Code**: The text string will be linked to the next generated code
Code Related Item or Package Related Item: Options	
Item Alignment	Select **None**, **Left**, or **Right** from the drop-down list.
Item Alignment Length	Enter an **Item Alignment Length** in the field provided.
Item Alignment Filler	Click to activate the **Text Entry Tool** and create filler text. Click **Submit** to save your text to the origin window text field, or click **Cancel** to return to origin window without transferring text.
Item Data Size	Select **Variable** or a number of digits to use from the drop-down list.
Item Data Format	Select **Decimal (ASCII)**, **Hexadecimal (ASCII)**, **Bitmap (ASCII)**, or **Numeric (Binary)** from the drop-down list.

3. When you have finished making changes, click **Update** to save or click **Reset** to revert to the previously saved values.

Modify Settings | Global Settings | Messaging | Statistics

Use the **Statistics** window to select the desired statistical counters, making up the statistics field, and relative statistics field separator string to be sent to the system by the Stand Alone or Master scanner.

To edit the Statistics settings:

1. In the tree menu under **Modify Settings**, navigate to **Global Settings | Messaging | Statistics**. The Statistics window opens.

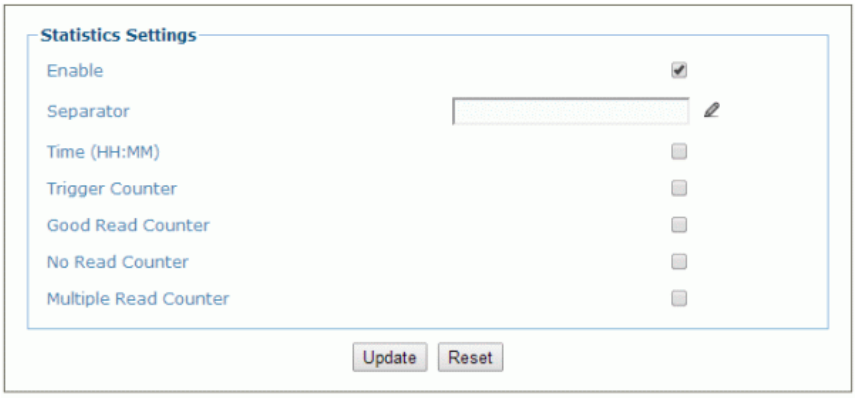

2. Enter the appropriate information in the form as described below:

Field Name	Action/Definition
Enable	Select the check box to reveal and edit statistic message options. The selections correspond to the message as shown below:

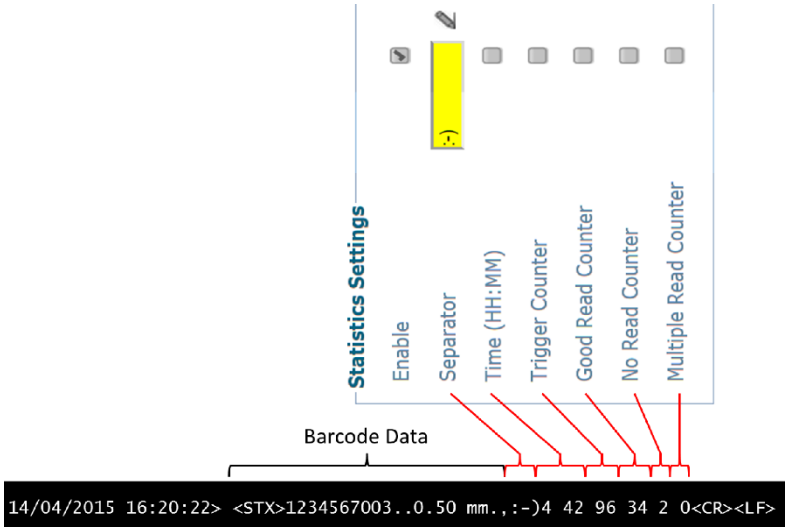

Separator	Click to activate the **Text Entry Tool** and create a **Separator** in the text field provided. **Separator** strings (up to 32 bytes) can be created and will be inserted between the last item in the *Data* field and the first item in the *Statistics* field. **NOTE:** A fixed <space> character separates all items within the Statistics field. Click **Submit** to save your text to the origin window text field, or click **Cancel** to return to origin window without transferring text.
Time	Select the check box to include the time counter in the statistical message, reporting the time elapsed in hours and minutes (H MM) from the last hardware reset.
Trigger Counter	Select the check box to reports the total number of trigger sessions (reading phases) from the last hardware reset.
Good Read Counter	Select the check box to report the total number of good reads from the last hardware reset.
No Read Counter	Select the check box to report the total number of no reads from the last hardware reset.
Multiple Read Counter	Select the check box to report the total number of multiple reads from the last hardware reset.

3. When you have finished making changes, click **Update** to save or click **Reset** to revert to the previously saved values.

Modify Settings | Global Settings | Messaging | Protocol Index

Use the **Protocol Index** window to configure Protocol Index parameters. Protocol Index allows the Host to transmit a string that it has associated to a pack contained within the tracking area.

It is possible to manage several different Protocol Index messages (one per available communication interface), within the same reading phase (for the same pack). If more than one Index message is received on the same communication interface, only the last one will be accepted.

These strings will be received by the BCL 900i Master or MSC 900 and included within its output message according to the following order:

1. Built-In Ethernet User Socket 1
2. Built-In Ethernet User Socket 2
3. Built-In Ethernet User Socket 3
4. Auxiliary Serial Port
5. Main Serial Port

The general output format is: <Header>Index1<Data Packet Separator>...IndexN<Data Packet Separator>Standard Message<Terminator>

The Index field has the following format: <Index Header>Index Message<Index Terminator>

NOTE: This parameter is only available for scanners configured as **Standalone** or as **Master** when working in **On Line** or **PackTrack** operating modes.

In **On Line** mode, the Protocol Index must arrive during the active reading phase otherwise it will be discarded.

- If the Distance from Protocol Index to Trigger Line parameter = 0, the Protocol Index must arrive during the active reading phase otherwise it will be discarded.

In **PackTrack** mode:

- If the Distance from Protocol Index to Trigger Line parameter is not = 0, the Protocol Index will arrive at the specified distance.

To edit the Protocol Index settings:

1. In the tree menu under Modify Settings, navigate to Global Settings | Messaging | Protocol Index. The Protocol Index window opens.

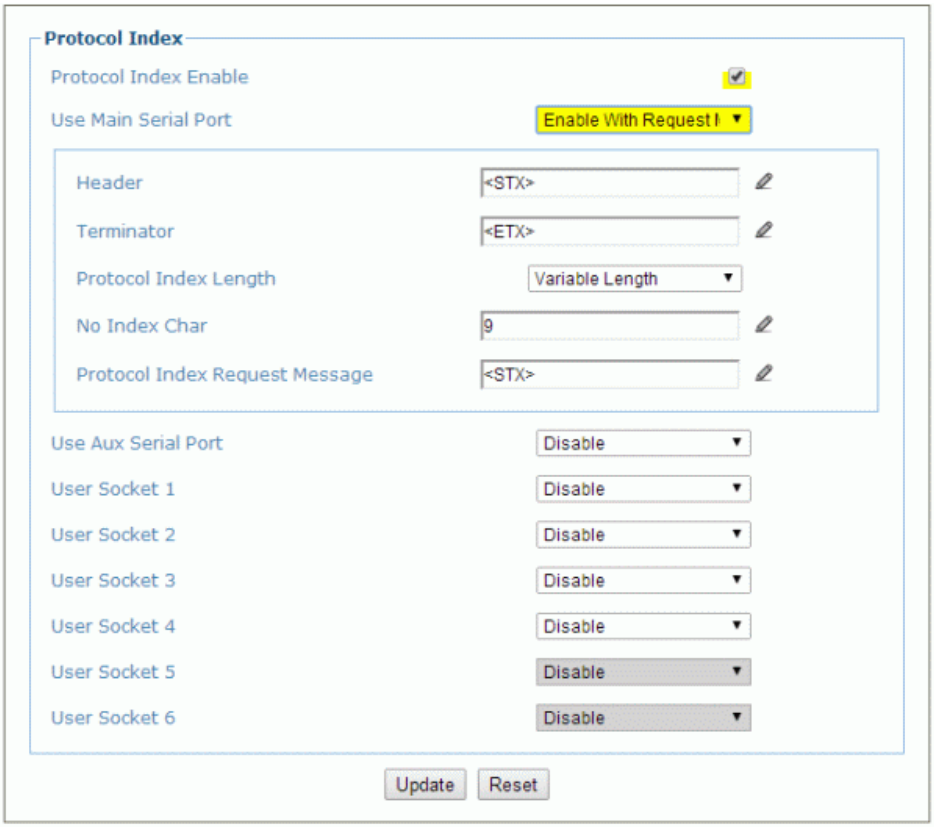

2. Enter the appropriate information in the form as described below:

Field Name	Action/Definition
Protocol Index Enable	Select the check box to reveal and edit **Protocol Index** options.
Use Main Serial Port	Select **Disable**, **Enable without Request Message**, or **Enable with Request Message** from the drop-down list. • **Disable**: The selected communication channel is not used for Protocol Index string communication. • **Enable without Request Message**: The Host sends the Protocol Index string autonomously on the selected communication channel. • **Enable with Request Message**: The Host waits for the Protocol Index Request Message sent by the scanner, when the trigger detects the presence of a pack, before transmitting the Protocol Index string associated to the pack itself on the selected communication channel.
Header	Click to activate the **Text Entry Tool** and create a **Header** (up to 128 bytes) to be defined and transmitted as a block preceding the **Protocol Index** string sent by the Host. Use characters from NUL (00H) to ~ (7EH). Click **Submit** to save your text to the origin window text field, or click **Cancel** to return to origin window without transferring text.

Terminator	Click to activate the **Text Entry Tool** and create a **Terminator** to be defined and transmitted as a block following the Protocol Index string sent by the Host. Use characters from NUL (00H) to ~ (7EH). Click **Submit** to save your text to the origin window text field, or click **Cancel** to return to origin window without transferring text.
Protocol Index Length	Select **Length in Message**, **Variable Length**, or a length of **3** through **12** from the drop-down list. • **Length in Message**: The first byte of the scanner output message indicates the length of the Protocol Index string sent by the Host. • **Variable Length**: The length of the Protocol Index string sent by the Host is variable. • **3...12**: The Protocol Index string has a fixed length from 3 to 12 characters.
No Index Char	Click to activate the **Text Entry Tool** and create a **No Index Char.** Click **Submit** to save your text to the origin window text field, or click **Cancel** to return to origin window without transferring text.
Protocol Index Request Message	Click to activate the **Text Entry Tool** and create a **Protocol Index Request Message**. Click **Submit** to save your text to the origin window text field, or click **Cancel** to return to origin window without transferring text.
Distance from Protocol Index to Trigger Line (mm)	Enter a distance in millimeters in the field provided. When the **Use Main Serial Port** parameter of the selected interface port is set to **Enable without Request Message**, this parameter specifies the distance from the Trigger Line (i.e. Presence Sensor) to the expected receiving point of the Protocol Index, measured in mm. If set to 0 the Protocol Index must arrive during the active reading phase otherwise it will be discarded.
Use Aux Serial Port / User Socket *n*	Select **Disable**, **Enable without Request Message**, or **Enable with Request Message** from the drop-down list. Then enter the parameters as described for **Use Main Serial Port** above.

3. When you have finished making changes, click **Update** to save or click **Reset** to revert to the previously saved values.

Modify Settings | Global Settings | Messaging | Pass-Thru

Use the **Pass-Thru** window to pass a message received on ANY port (serial or user socket connection) to any other port(s).

Applications can also be implemented to connect a device such as a hand-held reader to any serial or network port for additional manual code reading capability.

When using Pass-Thru mode, follow these programming notes:

- When using serial ports - Program receiving port same way regarding baud rate, data bits, stop bits and parity to the device sending the data.
- The Termination string must be configured in the same way as the message terminator on the device sending the data. The terminator will be forwarded with the message.

To edit the Pass-Thru settings:

1. In the tree menu under **Modify Settings**, navigate to **Global Settings | Messaging | Pass-Thru**. The Pass-Thru window opens.

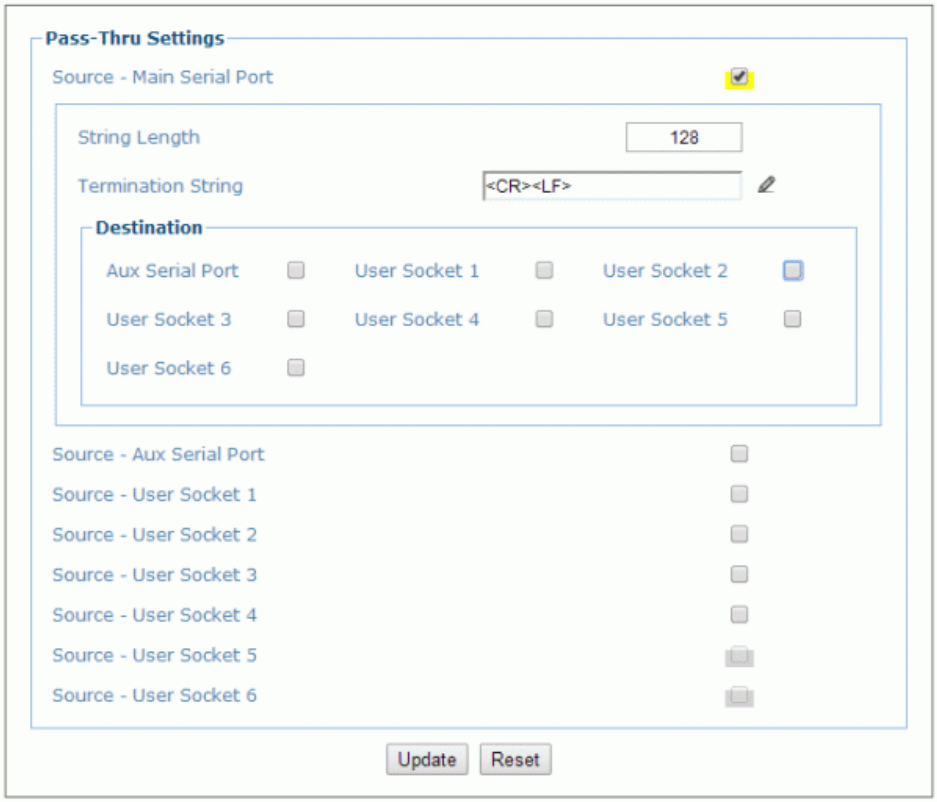

2. Enter the appropriate information in the form as described below:

Field Name	Action/Definition
Source	Select the check box(es) following the **Main Serial Port**, **Aux Serial Port**, or numbered **User Socket** you wish to modify.
String Length	Enter the maximum length of the expected string to be received. If the string is longer than the one expected, it will be discarded.
Termination String	Click to activate the **Text Entry Tool** to define the characters terminating the expected string. Click **Submit** to save your text to the origin window text field, or click **Cancel** to return to origin window without transferring text.
Destination	Select the check box next to the destination(s) to be used for the Pass-Thru.

3. When you have finished making changes, click **Update** to save or click **Reset** to revert to the previously saved values.

Modify Settings | Global Settings | Messaging | Diagnostics Messages

Use the **Diagnostic Message** window to select the parameters managing diagnostic message transmission by the **Stand Alone** or **Master** scanner.

To edit the Diagnostic Message settings:

1. In the tree menu under **Modify Settings**, navigate to **Global Settings | Messaging | Diagnostic Message**. The Diagnostic Message window opens.

2. Enter the appropriate information in the form as described below:

Field Name	Action/Definition
Transmit Mode	Select **On Timeout** or **With Code** from the drop-down list. The diagnostic message can be transmitted to the system by the **Stand Alone** or **Master** barcode scanner either asynchronously (at programmed intervals), or synchronously with the code.
Tx Refresh	Select a **TX Refresh** rate in seconds or minutes from the drop-down list to define the time interval in which the diagnostic messages will be transmitted if **Tx Mode** is asynchronous (On Timeout).
Message Position	Select **Append to Code** or **Replace Code** from the drop-down list. If **Transmit Mode** is synchronous (With Code), the diagnostic messages will be transmitted on the same interface used for code transmission. This selection determines if the messages will replace the code or be appended to it.

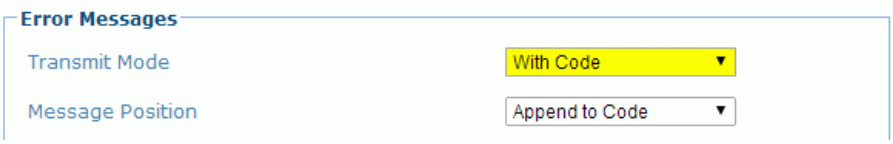

Message Format	
Header String	Click to activate the **Text Entry Tool** to define the header string (up to 128 characters) as a block preceding the diagnostic message. Use characters from NUL (00H) to ~ (7EH). Click **Submit** to save your text to the origin window text field, or click **Cancel** to return to origin window without transferring text.
Terminator String	Click to activate the **Text Entry Tool** to define the terminator string (up to 128 characters) as a block following the diagnostic message. Use characters from NUL (00H) to ~ (7EH). Click **Submit** to save your text to the origin window text field, or click **Cancel** to return to origin window without transferring text.
Error Message Type	Select **Numeric** or **Global String** from the drop-down list to define how the message will be sent.
Global String (max. 32 chars)	Click to activate the **Text Entry Tool** to define the **Global String** message (up to 32 bytes) that will be sent as a diagnostic message for any detected diagnostic error. Click **Submit** to save your text to the origin window text field, or click **Cancel** to return to origin window without transferring text.
Destination	Select the check box next to the destination(s) to be used for the diagnostic messages.
	PackTrack Messages
PackTrack Debug Message Enable	Select the checkbox to enable debug messages for PackTrack. If selected, this parameter allows transmitting messages concerning the system functioning.
PackTrack Debug Message Port	Select **Main Serial**, **Aux Serial**, or **Socket *n*** from the drop-down list. The debug message will be transmitted through the selected port.
PackTrack Debug Message Digital Input	Select **None**, **Trigger (Input 1)**, **Aux (Input 3)**, or **I/O 4 (Input 4)** from the drop-down list. This selection defines which digital input will be used to trigger debug message transmission.

3. When you have finished making changes, click **Update** to save or click **Reset** to revert to the previously saved values.

4.5.7 Modify Settings | Global Settings | Digital I/O

Use the **Digital I/O** window to configure the digital inputs and outputs for your barcode scanning system.

To edit the Digital I/O settings:

1. In the tree menu under **Modify Settings**, navigate to **Global Settings | Digital I/O**. The Digital I/O window opens.

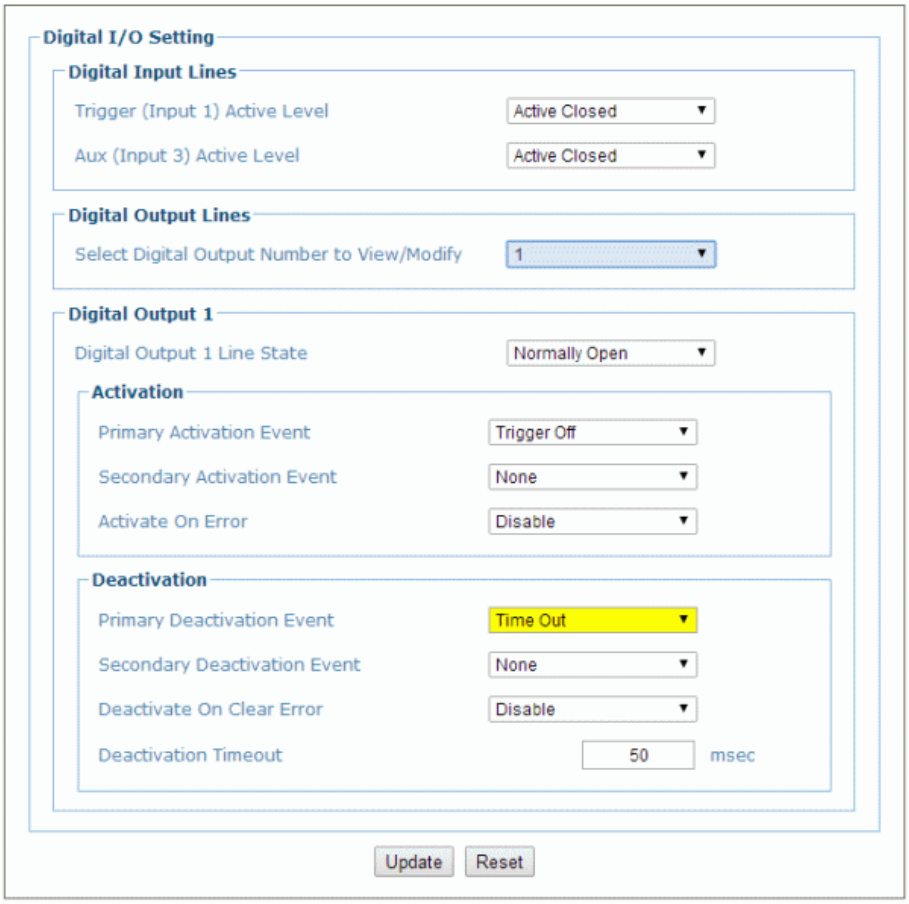

2. Enter the appropriate information in the form as described below:

Field Name	Action/Definition
	Digital Input Lines
Trigger (Input 1) Active Level	Select **Active Closed** or **Active Open** from the drop-down list. • **Active Closed**: Input 1 is active when current flows through (IN1) EXT_TRIG pins. • **Active Open**: Input 1 is active when there is no current flowing through (IN1) EXT_TRIG pins. **NOTE**: This parameter setting is not valid, if the input has already been defined in **On Line** or **PackTrack Operating Modes**.

Aux (Input 3) Active Level	Select **Active Closed** or **Active Open** from the drop-down list. • **Active Closed**: Input 3 is active when current flows through IN3 pins. • **Active Open**: Input 3 is active when there is no current flowing through IN3 pins. **NOTE**: This parameter setting is not valid, if the input has already been defined in **On Line** or **PackTrack Operating Modes**.

Digital Output Lines	
Select Digital Output Number to View/ Modify	Select the number of the output you will view or modify from the drop-down list.

Digital Output *n*	
Digital Output *n* Use	Select **Local**, **EthernetIP**, or **Profibus/Profinet** from the drop-down list.
Digital Output *n* Line State	Select **Normally Open** or **Normally Closed** from the drop-down list. Each output can be represented with an **NPN** transistor; this transistor acts like a switch: so, when the transistor is **OFF**, it acts like an **OPEN** switch. On the contrary, when the transistor is **ON**, it acts like a **CLOSED** switch. • **Normally Open**: The idle state of the output line is open, that is, the **NPN** transistor is **OFF** (like an open switch).When the output is activated, the transistor goes **ON** (like a closed switch). • **Normally Closed**: The idle state of the output line is closed, that is, the **NPN** transistor is **ON** (like a closed switch).When the output is activated, the transistor goes **OFF** (like an open switch).

Activation	
Primary Activation Event	Select a **Primary Activation Event** from the drop-down list (see below). • **None**: The output is always in line state. • **Complete Read**: The event occurs, if all selected codes are read. • **Partial Read**: The event occurs, if less than the selected codes are read. • **No Read**: The event occurs, if no code is read. • **Trigger On**: The event occurs, when a start event takes place starting the reading phase. • **Trigger Off**: The event occurs, when a stop event takes place ending the reading phase. • **Multiple Read**: The event occurs, if a code is read more than once consecutively. • **Right/Match**: The event occurs, if a code is successfully decoded and matches the Match Code (Verifier Code). • **Wrong/No Match**: The event occurs, if a code is successfully decoded but does not match the Match Code (Verifier Code).

Secondary Activation Event	Select a **Secondary (Alternate) Activation Event** from the drop-down list (see below). • **None**: The output is always in line state. • **Complete Read**: The event occurs, if all selected codes are read. • **Partial Read**: The event occurs, if less than the selected codes are read. • **No Read**: The event occurs, if no code is read. • **Trigger On**: The event occurs, when a start event takes place starting the reading phase. • **Trigger Off**: The event occurs, when a stop event takes place ending the reading phase. • **Multiple Read**: The event occurs, if a code is read more than once consecutively. • **Right/Match**: The event occurs, if a code is successfully decoded and matches the Match Code (Verifier Code). • **Wrong/No Match**: The event occurs, if a code is successfully decoded but does not match the Match Code (Verifier Code).
Activate On Error	Select **Disable** or **Enable** from the drop-down list. If this parameter is enabled, the output will activate when a diagnostic error message is sent. **NOTE:** When using this parameter, all other activation events should be set to **None**.
Deactivation	
Primary Deactivation Event	Select a **Primary Deactivation Event** from the drop-down list (see below). • **None**: A deactivation event is NOT defined. • **Timeout**: Indicates the maximum duration of the output pulse. When selected, the Deactivation Timeout text field is revealed. • **Trigger On**: The event occurs, when a start event takes place starting the reading phase. • **Trigger Off**: The event occurs, when a stop event takes place terminating the reading phase.
Secondary Deactivation Event	Select a **Secondary (Alternate) Deactivation Event** from the drop-down list (see below). • **None**: A secondary deactivation event is NOT defined. • **Trigger On**: The event occurs, when a start event takes place starting the reading phase. • **Trigger Off**: The event occurs, when a stop event takes place terminating the reading phase.
Deactivate On Clear Error	Select **Disable** or **Enable** from the drop-down list. If this parameter is enabled, the output will deactivate when the error is no longer present.
Deactivation Timeout	Enter the maximum duration of the output pulse in the text field provided. Input a value from **40** to **15000 milliseconds**.

3. When you have finished making changes, click **Update** to save or click **Reset** to revert to the previously saved values.

4.5.8 Modify Settings | Global Settings | Diagnostics

Use the **Diagnostics** window to configure the digital inputs and outputs for your barcode scanning system.

To edit the Diagnostics settings:

1. In the tree menu under **Modify Settings**, navigate to **Global Settings | Diagnostics**. The Diagnostics window opens.

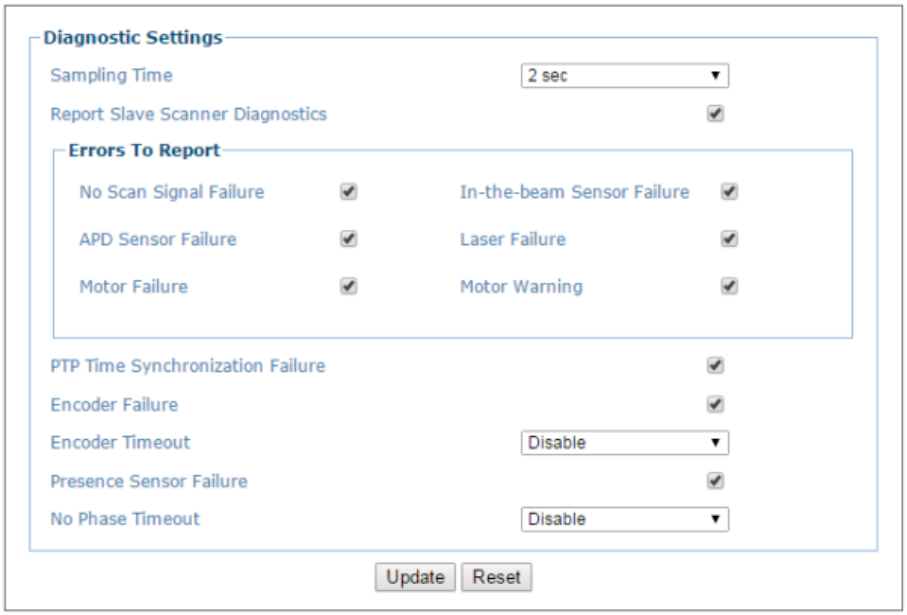

2. Enter the appropriate information in the form as described below:

Field Name	Action/Definition
Sampling Time	Select a **Sampling Time** in seconds or minutes from the drop-down list. This selection indicates the time lapse between system diagnostic queries.
Report Slave Scanner Diagnostics	Select the check box to report diagnostic information from the slave scanners in the system.
Errors To Report	Select the check box next to each error type the system should report.
PTP Time Synchronization Failure	Select the check box to report PTP (Precision Time Protocol) Time Synchronization Errors.
Encoder Failure	Select the check box to report encoder (tachometer) errors.
Encoder Timeout	Select **Disable** or a time interval in seconds or minutes from the drop-down list. If a time interval is selected, a stuck encoder will report an error after the selected interval.
Presence Sensor Failure	Select the check box to report presence sensor failure errors.

No Phase Timeout	Select **Disable** or a time interval in seconds or minutes from the drop-down list. If a time interval is selected, a stuck sensor will report an error after the selected interval.

3. When you have finished making changes, click **Update** to save or click **Reset** to revert to the previously saved values.

4.5.9 Modify Settings | Global Settings | Energy Saving

Use the **Energy Saving** window to activating/deactivate energy saving feature. In particular, it allows turning network scanner motors and lasers on or off according to specific conditions. It is suggested to use this parameter for example when the conveyor is stopped for a lengthy period.

To view and edit the Energy Saving settings:

1. In the tree menu under Modify Settings, navigate to Global Settings | Energy Saving. The Energy Saving window opens.

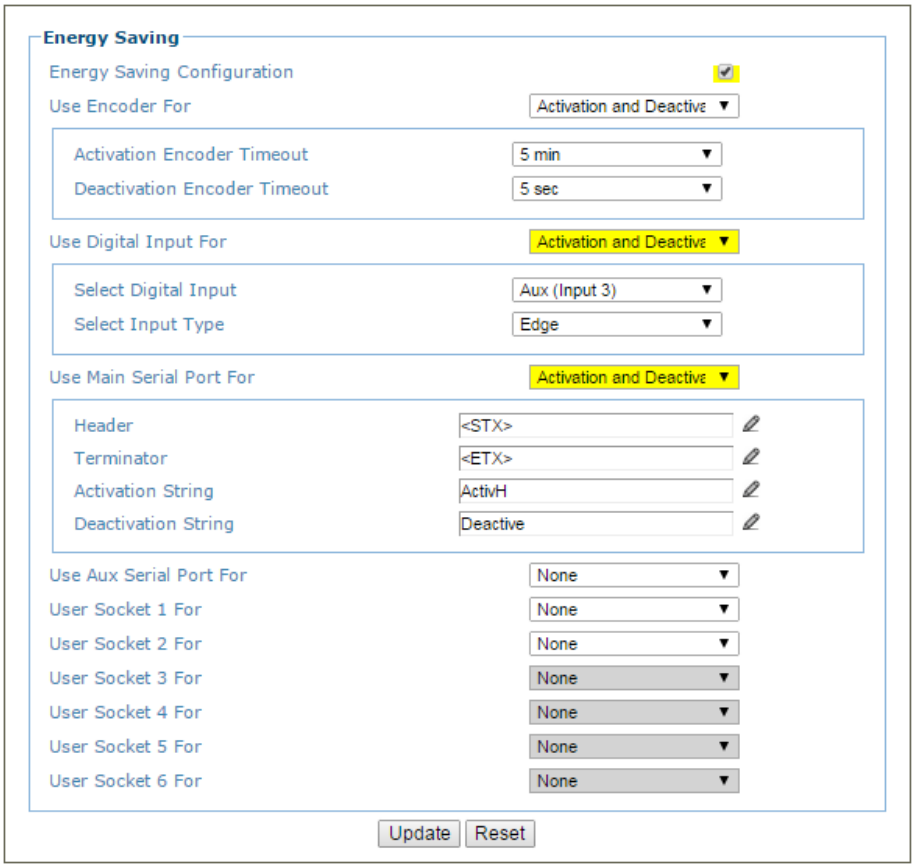

2. Enter the appropriate information in the form as described below:

Field Name	Action/Definition
Energy Saving Configuration	Select the check box to reveal **Energy Saving Configuration** options.
Use Encoder For	Select **None**, **Deactivation**, **Activation**, or **Activation and Deactivation** from the drop-down list. This parameter allows defining the function to be performed by an Encoder: • **None**: No function is performed by the digital input. • **Deactivation**: The digital input is used to deactivate the Energy Saving. Thus, the motor and laser of all network scanners will be turned on. • **Activation**: The digital input is used to activate the Energy Saving. Thus, the motor and laser of all network scanners will be turned off.

	• **Activation and Deactivation**: The digital input is used to both activate and deactivate the Energy Saving. Thus, the motor and laser of all network scanners will be turned on/off.
Activation Encoder Timeout	Select a minute value from the drop-down list. This parameter is available only when the encoder is used for the Energy Saving activation. If the encoder is stopped for more than the programmed timeout, the Energy Saving will be activated.
Deactivation Encoder Timeout	Select a second or minute value from the drop-down list. This parameter is available only when the encoder is used for the Energy Saving deactivation. If the encoder runs for at least the programmed timeout, the Energy Saving will be deactivated.
Use Digital Input For	Select **None**, **Deactivation**, **Activation**, or **Activation and Deactivation** from the drop-down list. This parameter allows defining the function to be performed by a digital input: • **None**: No function is performed by the digital input. • **Deactivation**: The digital input is used to deactivate the Energy Saving. Thus, the motor and laser of all network scanners will be turned on. • **Activation**: The digital input is used to activate the Energy Saving. Thus, the motor and laser of all network scanners will be turned off. • **Activation and Deactivation**: The digital input is used to both activate and deactivate the Energy Saving. Thus, the motor and laser of all network scanners will be turned on/off.
Select Digital Input	Select a digital input from the drop-down list. This parameter defines the digital input to be used for activating/deactivating the Energy Saving.
Select Input Type	Select **Edge** or **Level** from the drop-down list.
Use Main Serial Port For	Select **None**, **Deactivation**, **Activation**, or **Activation and Deactivation** from the drop-down list. This parameter allows defining the function to be performed by Main Serial Port: • **None**: No function is performed by the digital input. • **Deactivation**: The digital input is used to deactivate the Energy Saving. Thus, the motor and laser of all network scanners will be turned on. • **Activation**: The digital input is used to activate the Energy Saving. Thus, the motor and laser of all network scanners will be turned off. • **Activation and Deactivation**: The digital input is used to both activate and deactivate the Energy Saving. Thus, the motor and laser of all network scanners will be turned on/off
Header	**NOTE:** This parameter is available only when a communication channel has been selected to perform a specific function. Click to activate the **Text Entry Tool** and create a **Header** (up to 128 bytes) to define a header (1 byte) and transmit it as a block preceding the activation/deactivation string sent to a Master or Stand Alone scanner. Use characters from NUL (00H) to ~ (7EH). Click **Submit** to save your text to the origin window text field, or click **Cancel** to return to origin window without transferring text.
Terminator	**NOTE:** This parameter is available only when a communication channel has been selected to perform a specific function.

Click to activate the **Text Entry Tool** and create a **Terminator** to define a terminator (1 byte) and transmit it as a block following the activation/deactivation string sent to the Master or Stand Alone scanner. Use characters from NUL (00H) to ~ (7EH). Click **Submit** to save your text to the origin window text field, or click **Cancel** to return to origin window without transferring text.

Activation String

NOTE: This parameter is available only when a communication channel has been selected to perform the **Activation** or **Activation and Deactivation** function.

Click to activate the **Text Entry Tool** and create a string that defines the characters to be transmitted within the output message to activate the **Energy Saving**. Click **Submit** to save your text to the origin window text field, or click **Cancel** to return to origin window without transferring text.

Deactivation String

NOTE: This parameter is available only when a communication channel has been selected to perform the **Deactivation** or **Activation and Deactivation** function.

Click to activate the **Text Entry Tool** and create a character string to be transmitted within the output message to deactivate the **Energy Saving**. Click **Submit** to save your text to the origin window text field, or click **Cancel** to return to origin window without transferring text.

Use Aux Serial Port For

Select **None**, **Deactivation**, **Activation**, or **Activation and Deactivation** from the drop-down list. This parameter allows defining the function to be performed by the Aux Serial Port:

- **None**: No function is performed by the digital input.
- **Deactivation**: The digital input is used to deactivate the Energy Saving. Thus, the motor and laser of all network scanners will be turned on.
- **Activation**: The digital input is used to activate the Energy Saving. Thus, the motor and laser of all network scanners will be turned off.
- **Activation and Deactivation**: The digital input is used to both activate and deactivate the Energy Saving. Thus, the motor and laser of all network scanners will be turned on/off.

Header

NOTE: This parameter is available only when a communication channel has been selected to perform a specific function.

Click to activate the **Text Entry Tool** and create a **Header** (up to 128 bytes) to define a header (1 byte) and transmit it as a block preceding the activation/deactivation string sent to a Master or Stand Alone scanner. Use characters from NUL (00H) to ~ (7EH). Click **Submit** to save your text to the origin window text field, or click **Cancel** to return to origin window without transferring text.

Terminator

NOTE: This parameter is available only when a communication channel has been selected to perform a specific function.

Click to activate the **Text Entry Tool** and create a **Terminator** to define a terminator (1 byte) and transmit it as a block following the activation/deactivation string sent to the Master or Stand Alone scanner. Use characters from NUL (00H) to ~ (7EH). Click **Submit** to save your text to the origin window text field, or click **Cancel** to return to origin window without transferring text.

Activation String

NOTE: This parameter is available only when a communication channel has been selected to perform the **Activation** or **Activation and Deactivation** function.

Click to activate the **Text Entry Tool** and create a string that defines the characters to be transmitted within the output message to activate the **Energy Saving**. Click **Submit** to save your text to the origin window text field, or click **Cancel** to return to origin window without transferring text.

Deactivation String

NOTE: This parameter is available only when a communication channel has been selected to perform the **Deactivation** or **Activation and Deactivation** function.

Click to activate the **Text Entry Tool** and create a character string to be transmitted within the output message to deactivate the **Energy Saving**. Click **Submit** to save your text to the origin window text field, or click **Cancel** to return to origin window without transferring text.

User Socket *n* For

Select **None**, **Deactivation**, **Activation**, or **Activation and Deactivation** from the drop-down list. This parameter allows defining the function to be performed by a numbered Socket:

- **None**: No function is performed by the digital input.
- **Deactivation**: The digital input is used to deactivate the Energy Saving. Thus, the motor and laser of all network scanners will be turned on.
- **Activation**: The digital input is used to activate the Energy Saving. Thus, the motor and laser of all network scanners will be turned off.
- **Activation and Deactivation**: The digital input is used to both activate and deactivate the Energy Saving. Thus, the motor and laser of all network scanners will be turned on/off.

Header

NOTE: This parameter is available only when a communication channel has been selected to perform a specific function.

Click to activate the **Text Entry Tool** and create a **Header** (up to 128 bytes) to define a header (1 byte) and transmit it as a block preceding the activation/deactivation string sent to a Master or Stand Alone scanner. Use characters from NUL (00H) to ~ (7EH). Click **Submit** to save your text to the origin window text field, or click **Cancel** to return to origin window without transferring text.

Terminator

NOTE: This parameter is available only when a communication channel has been selected to perform a specific function.

Click to activate the **Text Entry Tool** and create a **Terminator** to define a terminator (1 byte) and transmit it as a block following the activation/deactivation string sent to the Master or Stand Alone scanner. Use characters from NUL (00H) to ~ (7EH). Click **Submit** to save your text to the origin window text field, or click **Cancel** to return to origin window without transferring text.

ПРОМЭЛЕКТРОНИКА / sales@prom-elec.com

Activation String

NOTE: This parameter is available only when a communication channel has been selected to perform the **Activation** or **Activation and Deactivation** function.

Click to activate the **Text Entry Tool** and create a string that defines the characters to be transmitted within the output message to activate the **Energy Saving**. Click **Submit** to save your text to the origin window text field, or click **Cancel** to return to origin window without transferring text.

Deactivation String

NOTE: This parameter is available only when a communication channel has been selected to perform the **Deactivation** or **Activation and Deactivation** function.

Click to activate the **Text Entry Tool** and create a character string to be transmitted within the output message to deactivate the **Energy Saving**. Click **Submit** to save your text to the origin window text field, or click **Cancel** to return to origin window without transferring text.

3. When you have finished making changes, click **Update** to save or click **Reset** to revert to the previously saved values.

4.5.10 Modify Settings | Global Settings | HMI Settings (Human-Machine Interface)

Use the **HMI Settings** window to configure some aspects of the scanner LEDs and HMI interface.

To view and edit the HMI Settings:

1. In the tree menu under **Modify Settings**, navigate to **Global Settings | HMI Settings**. The HMI Settings window opens.

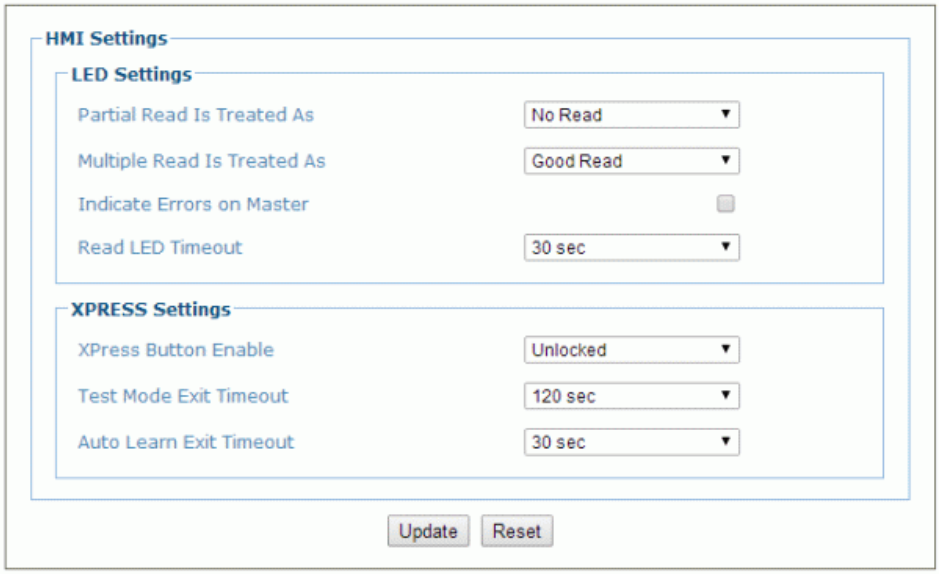

2. Enter the appropriate information in the form as described below:

Field Name	Action/Definition
LED Settings	
Partial Read Is Treated As	Select **No Read** or **Good Read** from the drop-down list.
Multiple Read Is Treated As	Select **No Read** or **Good Read** from the drop-down list.
Indicate Errors on Master	Select the check box to indicate errors from any scanner on the master scanner's LEDs.
Read LED Timeout	Select **Disable** or a second value from the drop-down list.
XPRESS Settings	
XPress Button Enable	Select **Unlocked**, **Partially Locked**, or **Locked** from the drop-down list. • **Unlocked**: When selected, the XPress button is active • **Locked**: When selected, the XPress button is inactive

Test Mode Exit Timeout	Select **Disable** or a second value from the drop-down list. This indicates how long the scanner will stay in **Test** mode.
Auto Learn Exit Timeout	Select **Disable** or a second value from the drop-down list. This indicates how long the scanner will stay in **Learn** mode.

3. When you have finished making changes, click **Update** to save or click **Reset** to revert to the previously saved values.

4.6 DEVICE SETTINGS

Use the **Device Settings Menu Tree** selections during initial mounting and setup to view device information and configure your **BCL 900i barcode scanner(s)**. If multiple scanners are used in a tunnel or array, each named scanner will be listed under Device Settings with the sub-menus **Device Info, Mounting,** and **Options**. If necessary, you can later make modifications to the configuration using the same menu selections, including:

Single Scanner Menu Trees

Tunnel/Array Menu Tree

4.6.1 Device Settings | Device Name | Device Info

Use the **Device Info** window to information about each device in the system including description, serial number, and address.

To view the Device Info window:

1. In the tree menu under **Modify Settings**, navigate to **Device Settings | Device Name (if applicable) | Device Info**. The **Device Info** window opens.

NOTE: If more than one device is included in the scanning system, the device name will be listed in the menu tree after the Device Settings level.

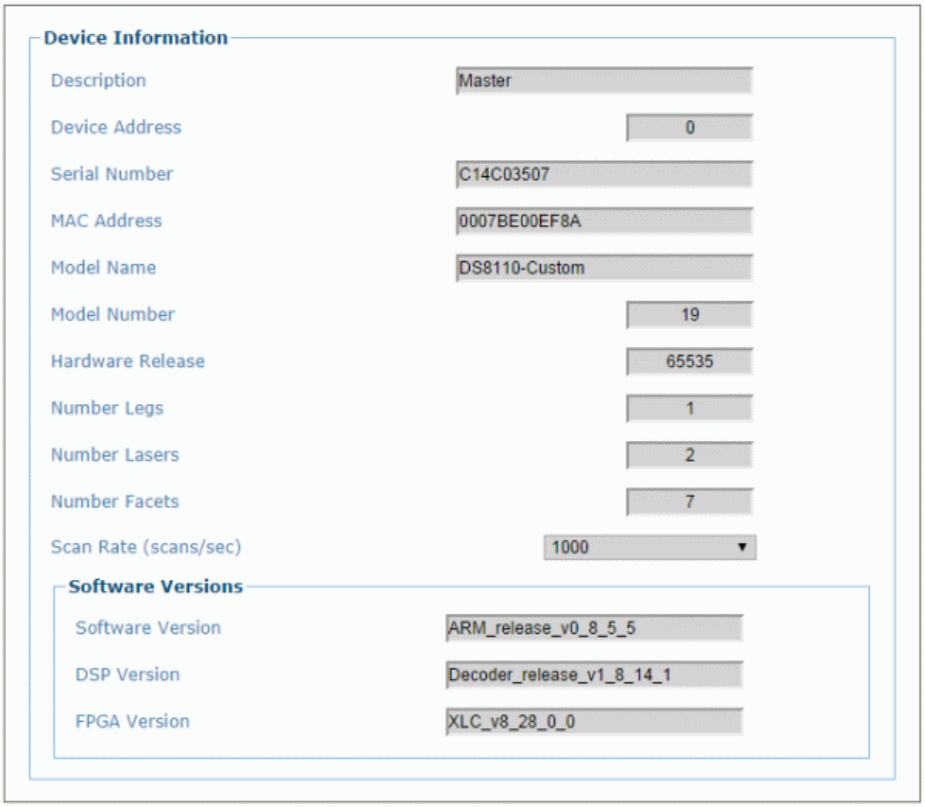

2. View the following scanner information:

Field Name	Definition
Description	Displays the scanner description entered in the System Info window.
Device Address	Displays the system address.
Serial Number	Displays the serial number sent by the device.
MAC Address	Displays the MAC (media access control) address of the device.

Model Name	Displays the Model name sent by the device.
Model Number	Displays the Model number sent by the device.
Hardware Release	Displays the hardware release number of the device.
Number Legs	Displays the number of laser legs (beams) produced by the device. Each BCL 900i (Line) scanner has 1 leg.
Number Lasers	Displays the number or lasers used by the scanner.
Number Facets	Displays the number of facets in the mirror wheel.
Scan Rate (scans/sec)	Displays the scans/per second achieved by the scanner.
Software Versions	
Software Version	Displays the currently installed version of the **ARM** (anonymizing relay monitor) software.
DSP Version	Displays the currently installed version of the decoder software.
FPGA Version	Displays the currently installed version of the **field-programmable gate array** software.

4.6.2 Device Settings | Device Name | Mounting

Use the **Mounting** window to configure some aspects of the scanner LEDs and HMI interface.

To view and edit the Mounting settings:

1. In the tree menu under **Modify Settings**, navigate to **Device Settings | Device Name (if applicable) | Mounting**. The Mounting window opens.

NOTE: If more than one device is included in the scanning system, the device name will be listed in the menu tree after the Device Settings level.

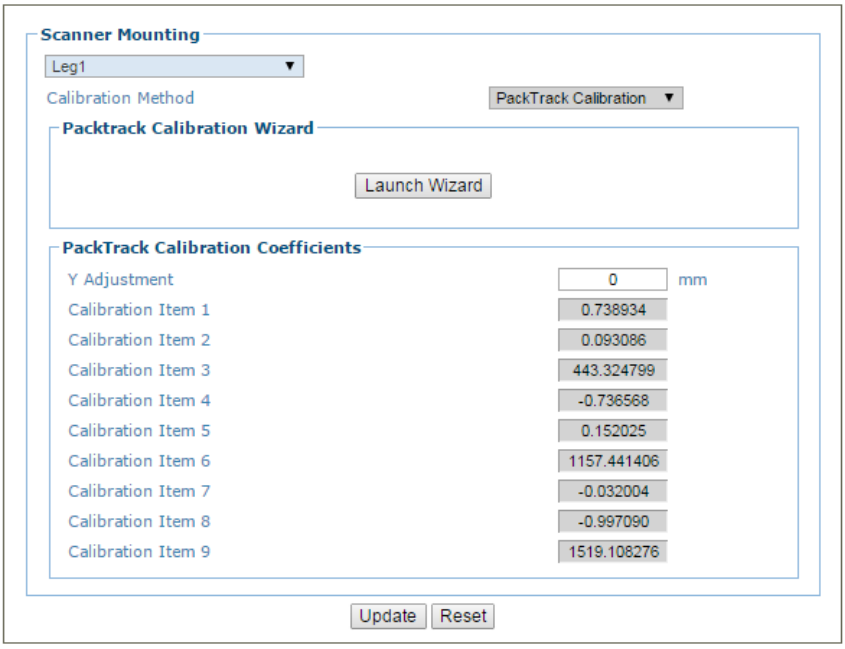

2. Enter the appropriate information in the form as described below:

Field Name	Definition
Calibration Method	Select **Specify Mounting** or **PackTrack Calibration** from the drop-down list. If **Specify Mounting** is selected, you must manually enter the requested data. If **PackTrack Calibration** is selected, use the wizard to automatically enter most of the data. **NOTE:** At the release of this manual, **PackTrack Calibration** is the only available option.

PackTrack Calibration

PackTrack Calibration Wizard	Click **Launch Wizard** to open the **PackTrack Calibration Wizard**. See section 5.6 *PackTrack* for the complete procedure for using the wizard to set up your barcode scanner.	
Calibration Adjustments	**Y Adjustment**	Enter the scanner adjustment from **Y** axis in millimeters in the field provided. This is used to make fine adjustments to the tested calibration *(see section 5.6).*
PackTrack Calibration Coefficients	**Calibration Item 1-9**	These non-editable fields display the PackTrack calculations.

3. When you have finished making changes, click **Update** to save or click **Reset** to revert to the previously saved values.

PackTrack Calibration Wizard

PackTrack is a patented operating mode for **Omni-Directional Reading Stations** used to read and correctly assign codes read on different packs when placed in the scanner Reading Area at the same time.

See *section 5.6* ***PackTrack*** for the complete procedure for using the wizard to set up your barcode scanner.

4.6.3 Device Settings | Device Name | Options

Use the **Options** window to configure some aspects of the scanner LEDs and HMI interface.

To view and edit the Options settings:

1. In the tree menu under **Modify Settings**, navigate to **Device Settings | Device Name (if applicable) | Options**. The **Options** window opens.

NOTE: If more than one device is included in the scanning system, the device name will be listed in the menu tree after the Device Settings level.

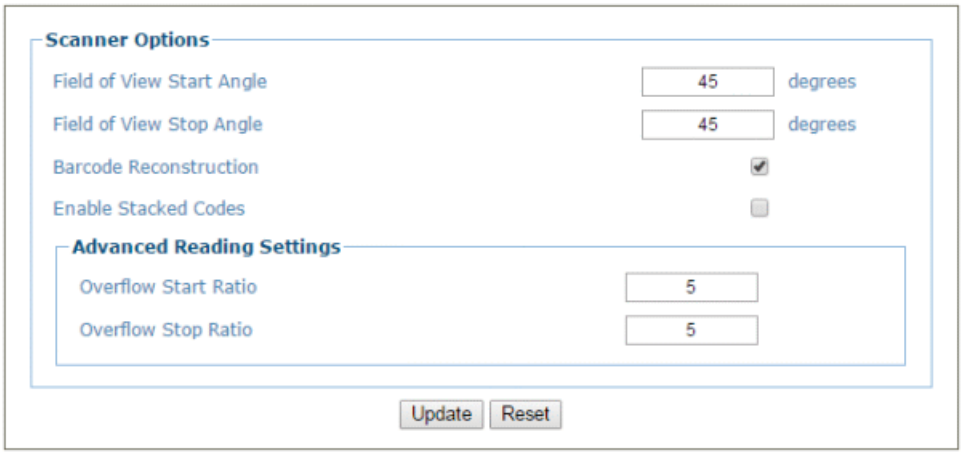

2. Enter the appropriate information in the form as described below:

Field Name	Definition
Field of View Start Angle	Enter the field of view (FOV) start angle in the field provided. This will adjust the start FOV angle to that specified. In the example below, the original **Start Angle** of 30° is reduced to 25° degrees when that value is entered. Field of View Start Angle 30 degrees Field of View Start Angle 30 degrees Field of View Start Angle 25 degrees Field of View Start Angle 30 degrees 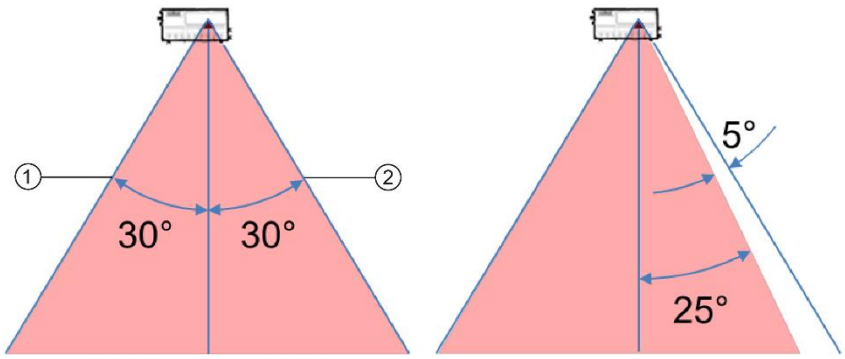 ① Stop Angle ② Start Angle

Figure 30: Start/Stop Angle

	NOTE: This option is only available for the BCL 900i scanner.
Field of View Stop Angle	Enter the field of view (FOV) stop angle in the field provided. This will adjust the stop FOV angle to that specified. **NOTE:** This option is only available for the BCL 900i scanner.
Barcode Reconstruction	Select the check box to enable Code Reconstruction Technology (CRT) when reading the code. If not checked, standard linear reading mode will be used.
Enable Stacked Codes	Select the check box to improve code reconstruction when two or more codes (of the same or different symbologies) are stacked one on top of the other with little or no space between them.
Overflow Start Ratio	Enter the minimum expected width of the barcode starting quiet zone, expressed in number of modules from 1 to 50.
Overflow Stop Ratio	Enter the minimum expected width of the barcode stopping quiet zone, expressed in number of modules from 1 to 50.

3. When you have finished making changes, click **Update** to save or click **Reset** to revert to the previously saved values.

4.7 DIAGNOSTICS

Use the **Diagnostics** menu tree selections to monitor your barcode scanning system performance, view system messages, and access online help. The **Diagnostic** windows include:

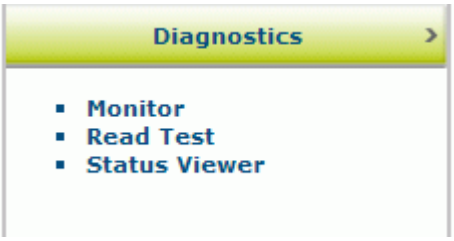

4.7.1 Diagnostics | Monitor

Use the **Diagnostics > Monitor** as the primary tool to monitor the reader's operation and bar code readability in real-time. Status indicators and vital statistics appear on a single screen, enabling you to effectively and efficiently detect and troubleshoot any problems that may occur.

NOTE: The Monitor is a Java application and requires Java and the appropriate browser plug-in.

To open the Monitor window:

In the tree menu under **Diagnostics,** navigate to **Monitor**. The **Monitor** window opens.

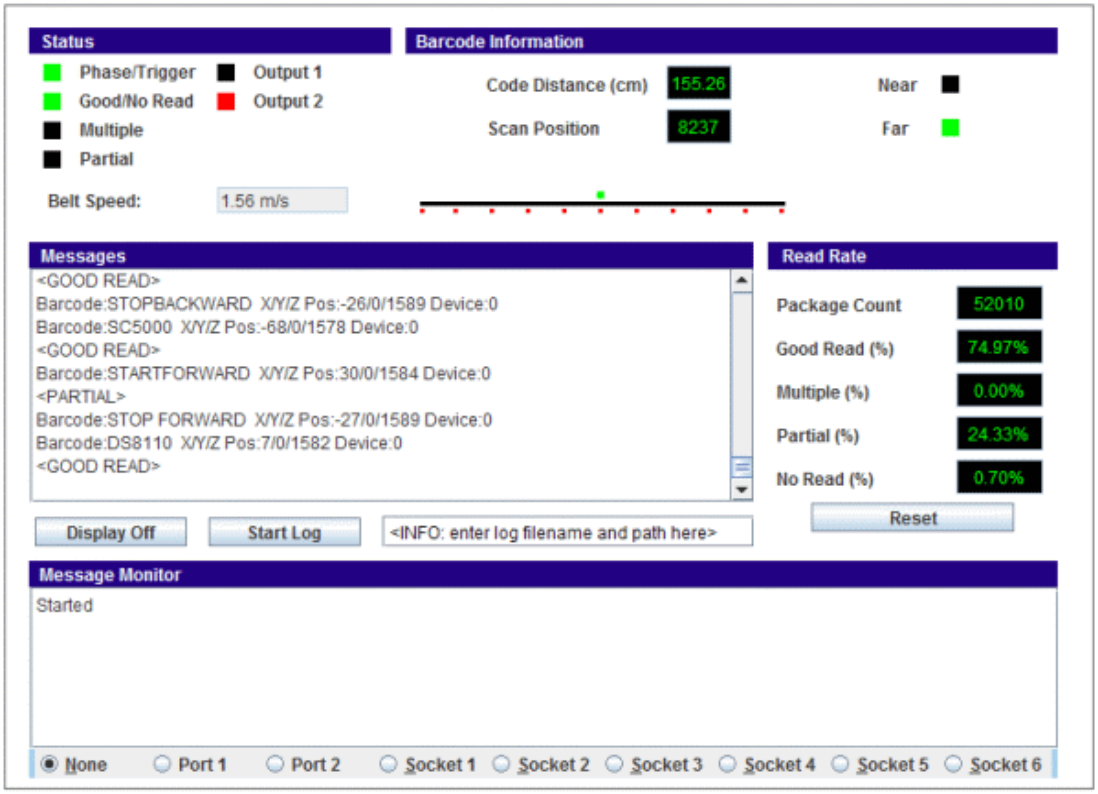

The status indicators in **Diagnostics > Monitor** indicate the following conditions:

Field	Definition
	Status
Phase/Trigger	GREEN indicates trigger input. The LED is activated upon trigger input regardless of trigger source (including software trigger).
Good/No Read	GREEN indicates a good (valid) bar code has been decoded. RED indicates a no-read (or incomplete decode).

Multiple	RED indicates more codes than desired were read.
Partial	RED indicates a partial read.
Output 1 / Output 2	RED indicates activity on that output.
Belt Speed	Indicates the current speed of the belt indicated by the encoder (tachometer).
Barcode Information	
Code Distance (cm)	Displays the distance from the laser origin to the scanned barcode.
Scan Position	Displays the position of the code in the scan line.
Near	GREEN indicates the barcode has been scanned by the near-focus laser.
Far	GREEN indicates the barcode has been scanned by the far-focus laser.
Messages	
Message Field	Displays message data being returned by the scanner for each barcode scanned.
Display Off/On	Click to toggle the real-time messages off or on.
Start Log	Click to create a log file from the time of the click. Enter a filename and path for the log file in the field provided.
Read Rate	
Package Count	Displays the number of packages detected since the last reset.
Good Read (%)	Displays the number of good barcode reads since the last reset.
Multiple (%)	Displays the number of multiple barcodes detected since the last reset.
Partial (%)	Displays the number of partially read barcodes since the last reset.
No Read (%)	Displays the number of no reads (no barcode read on package) since the last reset.
Reset	Click to reset the above counters.
Message Monitor	
Message Monitor Field	Select the option button beside **Port 1**, **Port 2**, **Socket 1**, **Socket 2**, **Socket 3**, **Socket 4**, **Socket 5**, or **Socket 6** to display messages for that host port. Select the option button beside **None** to stop displaying messages.

4.7.2 Diagnostics | Read Test

Use the Read Test window to check how well a scanner is operating.

To test a scanner's operation:

1. In the tree menu under **Diagnostics**, navigate to **Read Test**. The **Read Test** window opens.

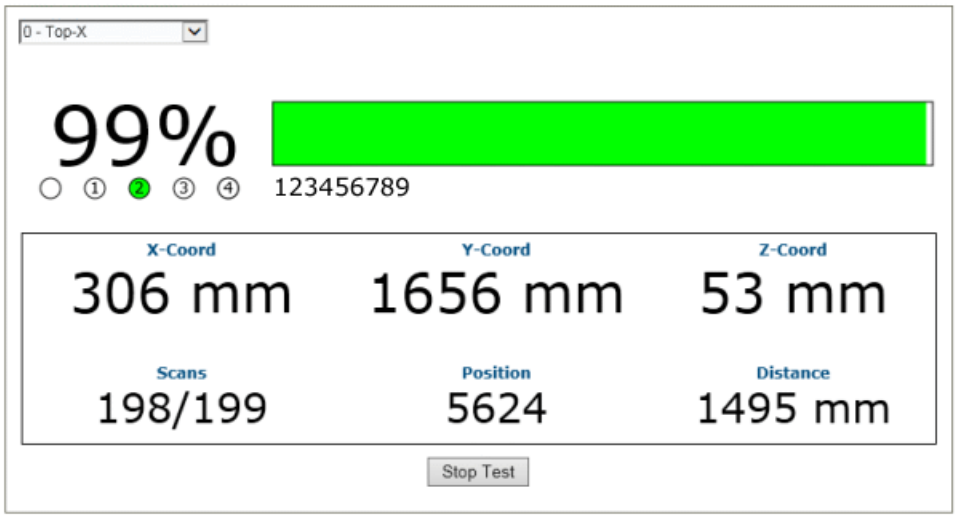

2. If there are multiple scanners in the system, select the scanner to test from the drop-down list at the top of the **Read Test** window.

3. Click the **Start/Stop Test** toggle button to run or stop the real-time performance display of the scanner.

The Read Test displays the following information:

- **Read Rate:** This is the percentage readout and bar at the top of the window, displaying the read rate since the start of the test.

  The numbered circle indicators below the read-rate percentage indicate in **GREEN**, which of the scanner's lasers is reading the barcode.

  The alpha numeric text following the numbered circle indicators is the barcode data.

- **Laser Identifiers:** These circles below the Read Rate percentage identify the number of lasers in the scan head as well as highlighting in GREEN the laser that is reading the barcode. In the example above, the scanner has four lasers and laser 2 is identified as reading the code. If the first circle is highlighted in RED, this indicates a NOREAD.

- **XYZ Coord:** This displays the real-time coordinates of the barcodes being read.

- **Scans:** Displays the number of times the scanner decoded the test barcode out of the number of opportunities it had to decode the test barcode during a test cycle.

- **Position**: Displays the position of the barcode in the scan line.

- **Distance:** Displays the distance from the laser origin to the last barcode read.

4.7.3 Diagnostics | Status Viewer

Use the **Status Viewer** to check up on your scanner health.

To access and use the Status Viewer:

1. In the tree menu under Diagnostics, navigate to Status Viewer. The Status Viewer window opens.

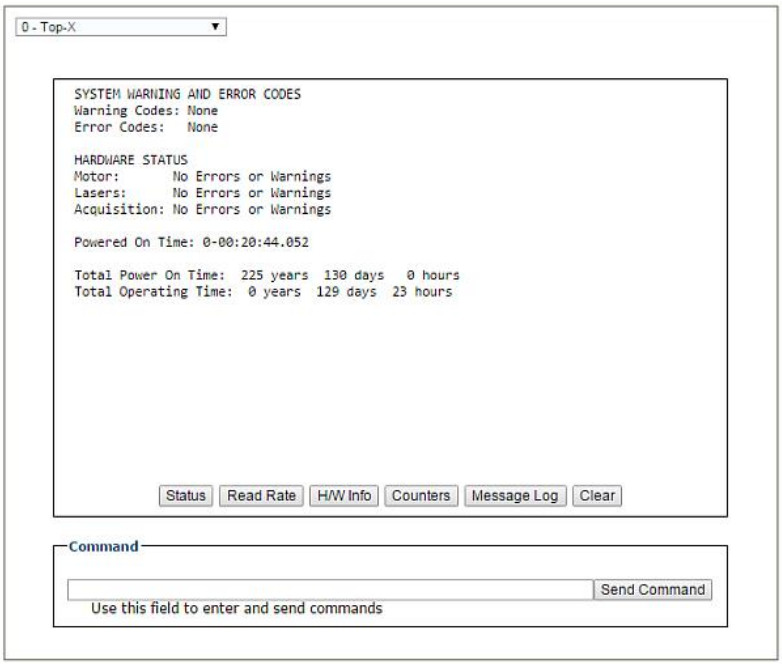

2. Select a device to view from the drop-down list at the top-left corner of the window.

3. Click on a button at the bottom of the display window to select the type of information you want to view:

   - **Status:** displays system warnings or errors.

```
SYSTEM WARNING AND ERROR CODES
Warning Codes: None
Error Codes:   None

HARDWARE STATUS
Motor:       No Errors or Warnings
Lasers:      No Errors or Warnings
Acquisition: No Errors or Warnings


Total Power On Time:  225 years  172 days   8 hours
Total Operating Time:  0 years  172 days   7 hours
```

- **Read Rate**: displays read rate and package count information.

```
READ RATE
Total Packages:        34204
Good Reads:            25086      73%
No Reads:                837       2%
Partial:                8281      24%
Multiple:                  0       0%
```

- **H/W Info:** displays information about the selected hardware, including model, serial number, scans/second, laser information, and more.

```
CONFIGURATION
Model Type:  BCL 900i SM 102
Serial Num:  C14C03507
Mac Address: 00-07-be-00-ef-8a
Num Lasers:  2
Num Legs:    1
Num Facets:  7

CURRENT STATUS
Scan Rate:        1000 scans/sec
Current APD DAC:  469

                   Temp        VCC
Laser 1:         40.59 C     3.2790
Laser 2:         40.89 C     3.2722
Logic Board:     39.00 C
APD Board:       41.50 C
```

- **Counters:** displays cumulative data about scans, triggers, errors, and much more.

```
SYSTEM INFO
Scan Rate (scans/sec):  999     Belt Speed (m/s):      1.55
Tach Rate (cnts/sec) : 2429     Belt Speed (ft/min):    306

DECODER COUNTERS
Scan Ints:            14796     DSP Codes:            59214
Triggers:             59548     DSP Triggers:           960
Process L0:           25824     Process L1:               0
Max Elements L0:        310     Max Elements L1:          0
Queue Size:               1     Queue Max:                9
Mem Alloc Err:            0     Memory Full:              0

SCAN DATA EXCEPTION COUNTERS
Missed DMA:               0     Missed QDMA:              0
Xfer Overflow:            0     Xfer Bad Length:          0
ASTRA Seg Err:            0     Invalid Leg No:           0
Low Term Count:           0     High Term Count:          0
Motor Var Cnt:            0

ARM Restarts:             0     DSP Restarts:             0
```

- **Message Log:** displays messages logged since the last clear command.

```
      0-00:00:00.723: APD Read:  DAC/Temp Ref: 243/6400
      0-00:00:00.723: APD Read:  Gain/Offset/Min/Max/Type: -1/-1/-1/-1/-1
      0-00:00:00.725: APD DAC Initialized.
      0-00:00:00.852: ADC Configuration Complete.
      0-00:00:00.959: Loading FPGA file XLC_v20_0_0_0.fpga.
      0-00:00:03.938: FPGA device id: 4c55.
      0-00:00:03.938: FPGA version: 6.0(0).
      0-00:00:06.378: Loading DSP file Decoder_release_v1_8_17_0.dsp.
      0-00:00:06.678: DSP load complete.
      0-00:00:06.678: Scan Engine Started.
      0-00:00:06.679: FPGA Buffer Export Task Started
      0-00:00:14.664: Motor Speed Threshold set to 0xFFFF.
      0-00:00:14.664: FIR Filter Coefficients Loaded.
      0-00:00:14.664: Scan FOV set to 88 deg (off=1562 len=21420)
      0-00:00:15.263: Ethernet Initialzation Complete.
      0-00:00:15.263: Web Server Initialization Complete.
      0-00:00:16.665: DSP Version 1.8.17 Started.
      0-00:00:16.665: Scan Engine Initialized.
      0-00:00:16.686: IsAlone=0 IsMaster=0 NumDevices=3
Powered On Time: 0-00:38:22.825
```

4. Click **Clear** to clear out the **Message Log**.

You can also enter a specific system command in the field provided at the bottom of the window. Click **Send Command** to execute.

4.8 UTILITIES

Use the **Utilities** menu tree selections to backup, restore, and update system firmware, or to reboot the scanner. The **Utilities** windows include:

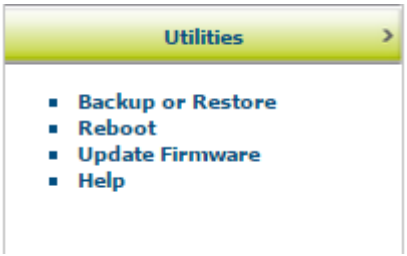

4.8.1 Utilities | Backup or Restore

Use **Backup or Restore** to save all the settings to the dimensioner and backup the settings to the Backup Module and/or file.

To use the Backup or Restore functions:

1. In the tree menu under **Utilities**, click **Backup or Restore** Info. The **Backup or Restore** window opens.

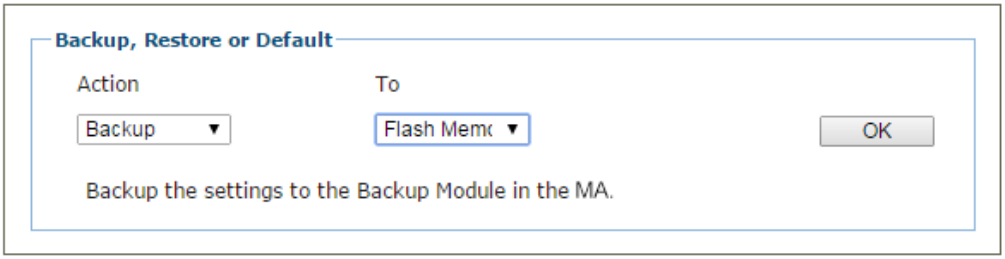

2. From the drop-down lists shown, select an **Action** and a **To/From** option.

Action	To/From	
Backup	**Flash Memory**	When this option is selected, click **OK** to save the settings to the Backup Module in the MA Connection Box. A progress box displays the percent complete of the save operation.
	File	When this option is selected, click **OK** to download the file to your computer. The file can then be saved to an appropriate backup folder.

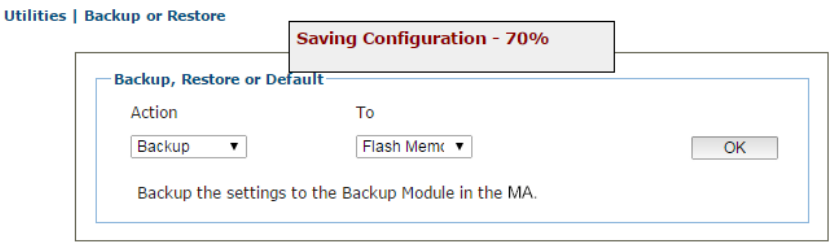

Restore	**Flash Memory**	When this option is selected, click **OK** to retrieve the settings to the Backup Module in the MA. A progress box displays the percent complete of the restore operation.
	File	When this option is selected, a **Choose File** button is revealed. Click **Choose File** to open a file browser and located the settings .txt file to be restored. When the file has been located and selected, click **OK** to save the file to the device.

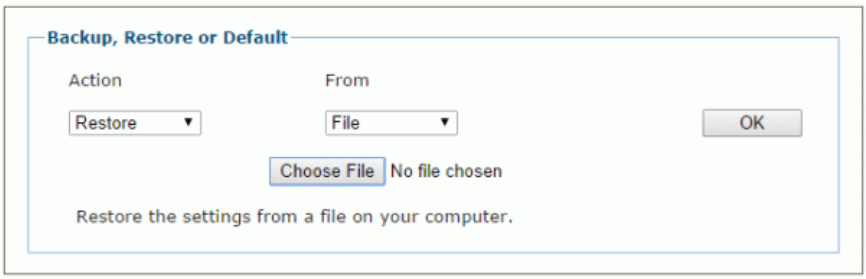

Default	**Application**	When this option is selected, click **OK** to restore application settings to Factory defaults, except for Ethernet and PackTrack.

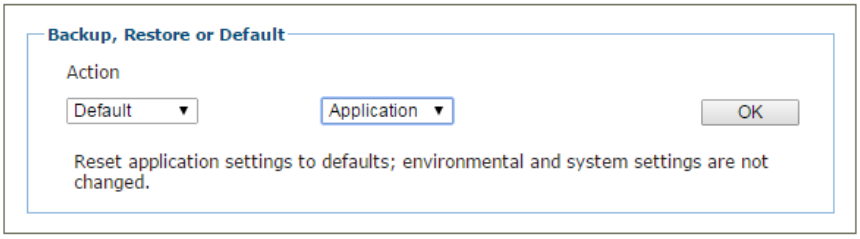

	App and Env	When this option is selected, click **OK** to restore all settings including Ethernet and PackTrack.
	All	When this option is selected, click **OK** to **COMPLETELY RESET** the scanner to Factory configuration.

4.8.2 Utilities | Reboot

Use the **Reboot** window the restart the scanner or system.

To use the Reboot function:

1. In the tree menu under **Utilities**, click **Reboot** Info. The Reboot window opens.

2. Click **Reboot.** A confirmation box appears.

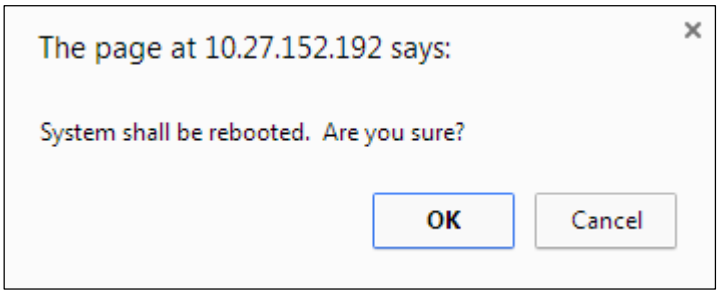

3. Click **OK** to reboot the system, or click **Cancel** to return to the reboot window without restarting the system.

4.8.3 Utilities | Update Firmware

Use **Update Firmware** to reload the scanner system firmware.

CAUTION: This function should only be performed under the guidance of Leuze electronic Technical Support.

To Extract Image:

1. In the tree menu under **Utilities**, click **Update Firmware**. The **Update Firmware** window opens.

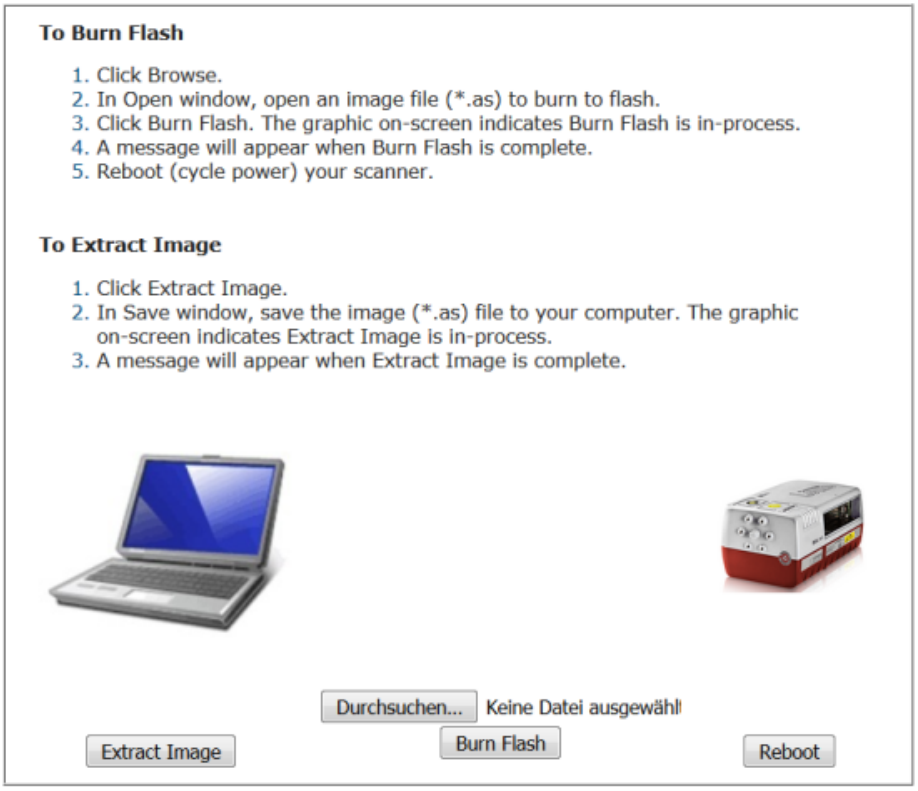

2. Click **Extract Image**. A confirmation box appears.

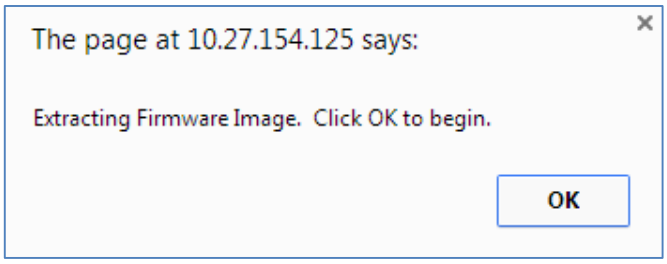

3. Click **OK** to continue.

4. The graphic on screen indicates **Extract Image** is in-process. A message will appear when **Extract Image** is complete.

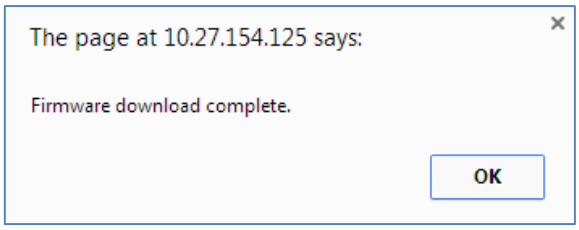

To Burn Flash:

1. Click **Choose File**. In the browse window, select an image file (*.as) to burn to flash.

NOTE: The appearance of these functions may vary from browser to browser.

2. Click **Burn Flash**. The graphic on-screen indicates **Burn Flash** is in-process.

3. A message will appear when **Burn Flash** is complete.

To Reboot the System:

1. Click **Reboot.** A confirmation box appears.

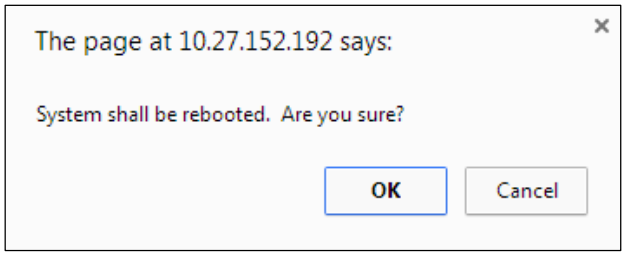

2. Click **OK** to reboot the system, or click **Cancel** to return to the reboot window without restarting the system.

5 BARCODE SCANNING FEATURES

This chapter provides details on how the BCL 900i Barcode Scanning System functions during normal operation. It also helps familiarize the user with status indicator LEDs, Control Panel operation, system setup, and how the scanners can be easily and quickly replaced with a new unit if necessary.

IMPORTANT: The procedures outlined in this chapter should only be performed by a Leuze electronic trained technician.

For further information on training, contact us through the Leuze electronic website at www.leuze.de.

5.1 FIRST-TIME STARTUP

NOTE: Before starting up or testing the scanner, it must be connected to a MA 900 Connection Box or an MSC 900 Controller depending on the system configuration.

On initial power-up, the BCL 900i performs a series of self-diagnostic and LED tests. The complete power-up sequence takes about 20 seconds. When the **READY** LED flashes and turns a steady green the power-up sequence is complete, and the scanner is operational.

5.1.1 Default Parameters

The barcode scanners are shipped from the factory with these defaults:

- Default Password: LEUZE
- Control Panel Buttons Enabled
- Code 128 (10-30 characters), Code 39
- IP address HOST 172.27.101.220; Setup 192.168.3.100

Perform the following setup procedure using these defaults or configure your Barcode scanner with your application's parameters using the User Interface.

5.1.2 Check Operations using Test Mode

NOTE: Perform the following test using a bar code that matches the default parameters. A barcode test chart is included in the box with each scanner, and a code from the chart can be used to perform the test If the default parameters have been changed, you must enable the control panel buttons and the other default parameters listed.

To quickly check BCL 900i operation:

1. Make sure the scanner is connected to a MA 900 or MSC 900.

2. Apply power to the reader.

3. Press and hold the MODE button until the first two red LEDs light, and then release the button.

4. Position a test barcode symbol approximately 750 mm [30 inches] from the reader. Skew the bar code symbol slightly.

5. The laser(s) should be scanning continuously during normal operations. (Observe the laser safety warnings.)

6. Observe the LEDs. The LEDs illuminate when the reader is scanning and decoding the bar code symbol, and indicate the rough read rate of the scan *(see 5.5.1).*

5.2 BASIC INSTALLATION PROCEDURES WITH THE MA 900

1. Mechanically install the scanner(s) according to the application drawing for your system.

2. Install the MA 900 according to the application drawing or in a location for best wiring access to scanner(s), encoder (tachometer), and photoelectric sensor.

3. If using more than one scanner, connect the host cable to ETH1 of the designated Master. Then wire ETH2 from the Master to ETH1 of the first Slave, and then from the first slave ETH2 to ETH1 of the next slave and so on.

4. Connect the 25 pin I/O communication cable from the scanner (Master only in multihead systems) to the MA 900.

5. Wire the encoder (tachometer) and photoelectric sensor into the MA 900 *(see sections 3.11 and 3.10).*

6. After the scanner(s), MA 900, and accessories have been carefully wired, apply power to the system.

7. When everything is powered up, connect a laptop to the ETH2 of the scanner (last slave in a multihead system.)

8. Open a browser and enter the default IP (192.168.3.100, *see section 4.1.2.).* The User Interface opens.

NOTE: Detailed information on connecting a laptop to the system and using the User Interface is available in *Chapter 4.*

9. Log on to the User Interface *(see section 4.1.2.).*

10. From the menu tree, select **Modify Settings | System Info**.

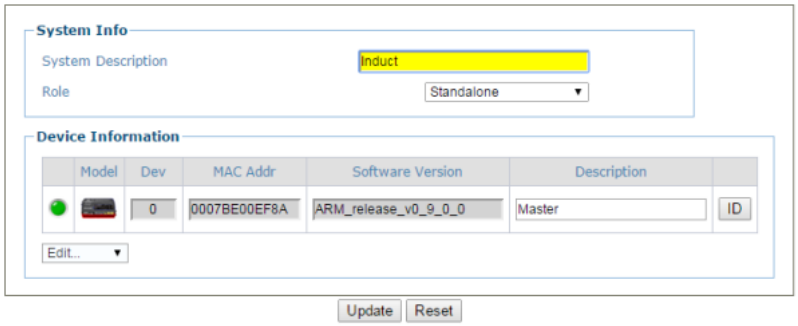

11. Select **Standalone** (single head) or **Master** (multihead) from the **Role** drop-down list.

12. If Master is selected, the system is polled, and the other scanners are added to the Device information list.

13. From **Modify Settings | Global Settings | Operating Mode**, select a mode, trigger source, encoder setting.

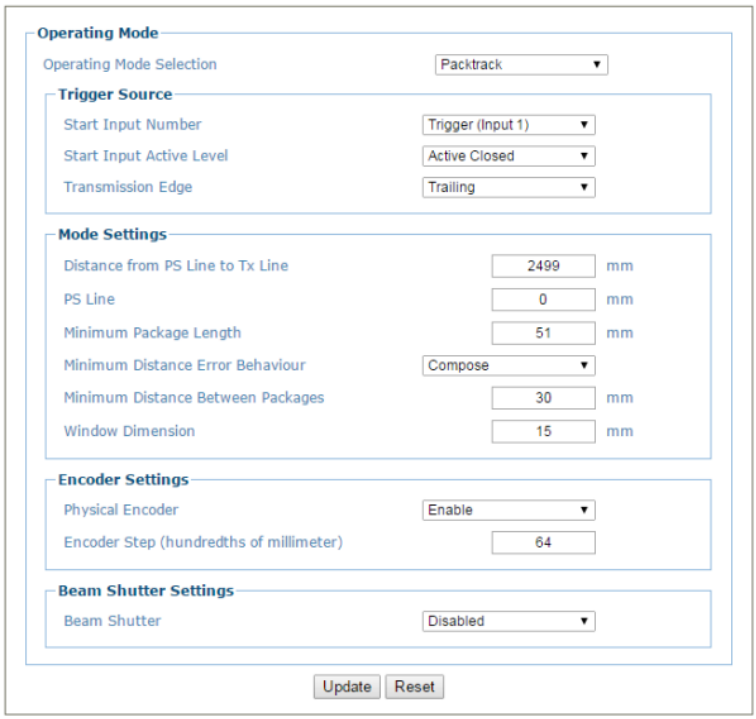

14. Adjust the barcode settings in **Modify Settings | Global Settings | Barcode Settings Table** according to the needs of your system.

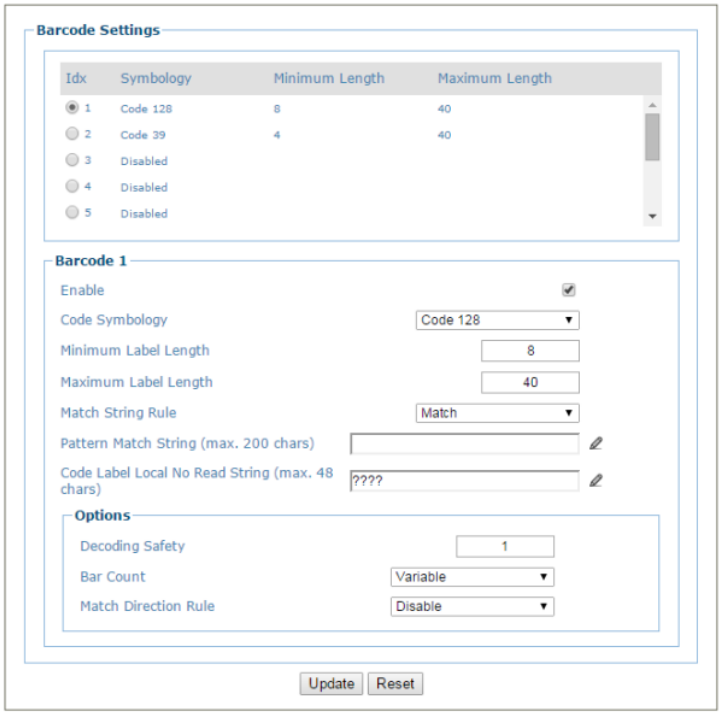

15. In **Modify Settings | Global Settings | Barcode Configuration** select single, multiple, or logical combination of labels, based on your application.

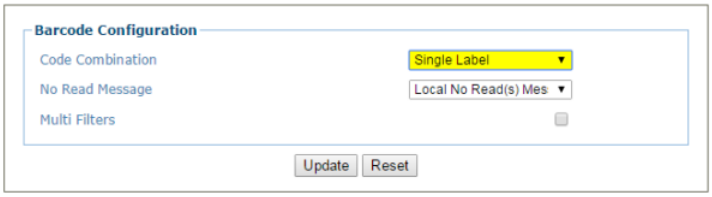

16. Move through the menu tree to configure **Serial Ports, Ethernet,** and **Messaging** settings based on your application requirements.

17. In **Global Settings | Messaging | Message Format** change the **Message Tx Selection** to **After Reading Phase OFF**.

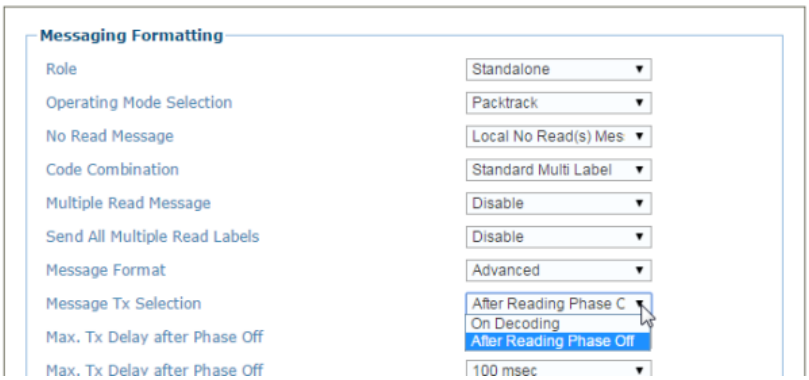

18. Run the **PackTrack** calibration procedure *(see section 5.6).*

19. When the scanner(s) has been configured and calibrated, backup the system congfiguration using **Utilities | Backup or Restore.** It is recommended to save the system paramaters to the Backup Module on the MA 900 and to a file on your computer.

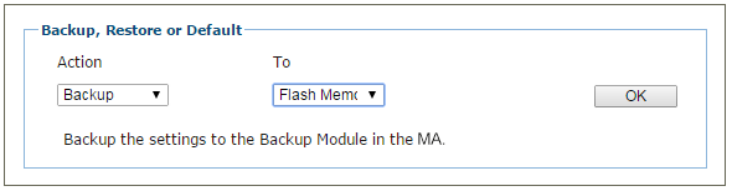

20. Select **Backup** from the **Action** drop-down list, and select **Flash Memory** from the **To** drop-down list.

21. Click **OK**. The following message will be displayed.

22. Next, select **Backup** from the **Action** drop-down list, and select **File** from the **To** drop-down list.

23. Click **OK** to download the configuration text file (param.txt) to your computer.

5.3 BASIC INSTALLATION WITH MSC 900 CONTROLLER

1. Mechanically install the scanners according to the application drawing for your system.

2. Install the MSC 900 according to the application drawing or in a location for best wiring access to scanner(s), encoder (tachometer), and photoelectric sensor.

3. Connect the host cable to the HOST of the MSC 900 *(see figure below)*. Next, wire ETH2 from the MSC 900 to ETH1 of the first Slave, and then from the first slave ETH2 to ETH1 of the next slave and so on. If wiring the scanners in a complete ring configuration, connect ETH2 of the last slave in the series to ETH1 of the MSC 900.

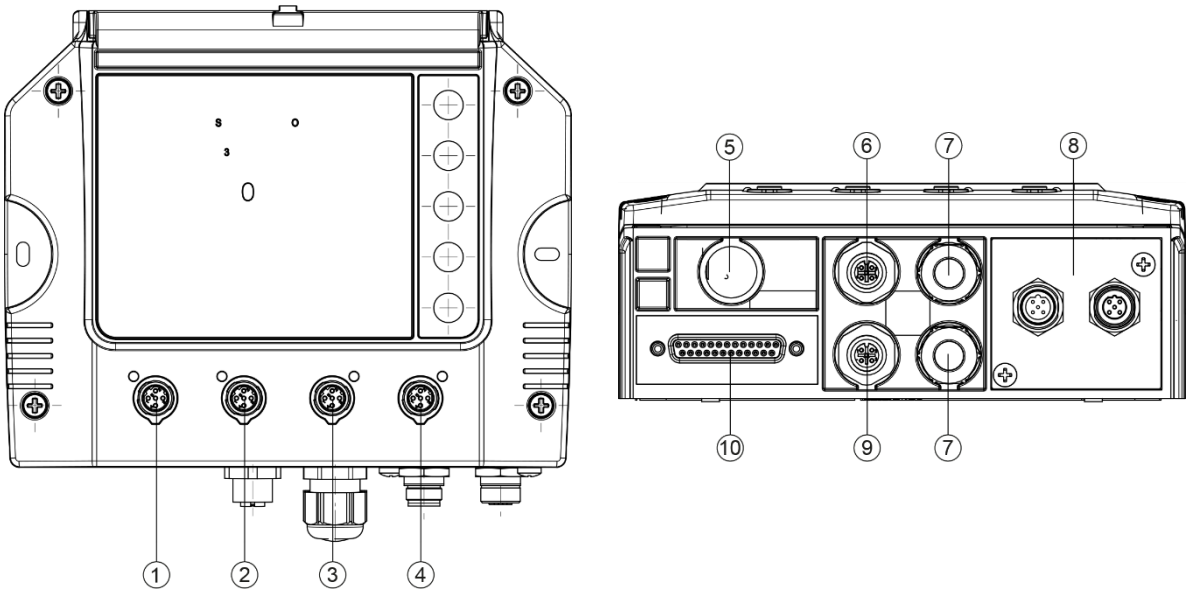

1. CFG – Configuration
2. Host
3. ETH2 – EBC scanner network
4. ETH1 – EBC scanner network
5. PWR – Power
6. ENC – Encoder/Tachometer
7. Water-tight connectors
8. Connector Add-On Panel
9. TRG – Trigger/Photoelectric Sensor
10. 25-Pin D, Scanner Connector

Figure 31 - MSC 900 Standard Model Connector Panel

4. Connect the encoder (tachometer) and photoelectric sensor (trigger) to the bottom of the MSC 900 Controller *(see figure above).*

5. Connect the (unpowered) Power supplies to the scanners and MSC 900.

6. After the scanner(s), MSC 900, and accessories have been carefully wired, apply power to the system.

7. When everything is powered up, connect a laptop to the CFG port on the front of the MSC 900. In a open (non-ring) system, the laptop can be connected to ETH2 of the scanner.

8. Open a browser and enter the default IP (192.168.3.100, *see section **4.1.2**.).* The User Interface opens.

NOTE: Detailed information on connecting a laptop to the system and using the User Interface is available in *Chapter **4**.*

9. Log on to the User Interface *(see section **4.1.2**.).*

10. From the menu tree, select **Modify Settings | System Info**.

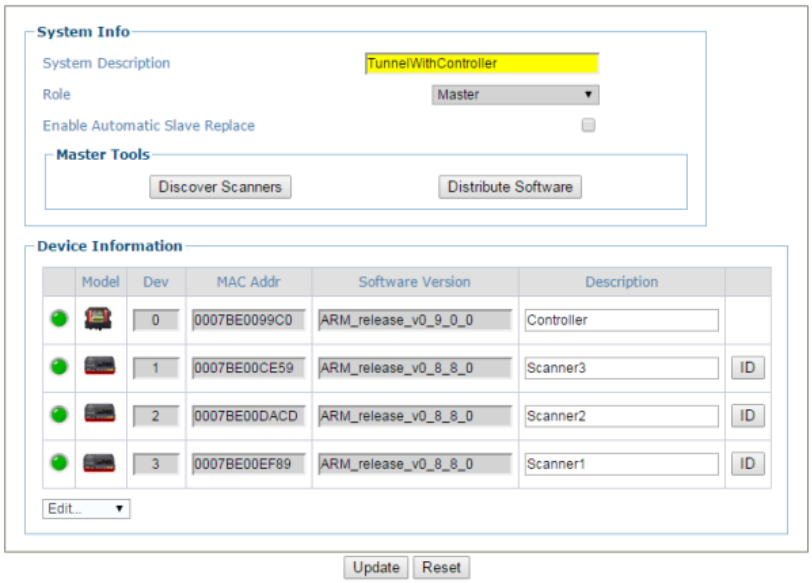

11. If Master is selected, the system is poled, and the other scanners are added to the Device information list. The MSC 900 Controller always serves as the Master when used.

12. From **Modify Settings | Global Settings | Operating Mode**, select a mode, trigger source, encoder setting.

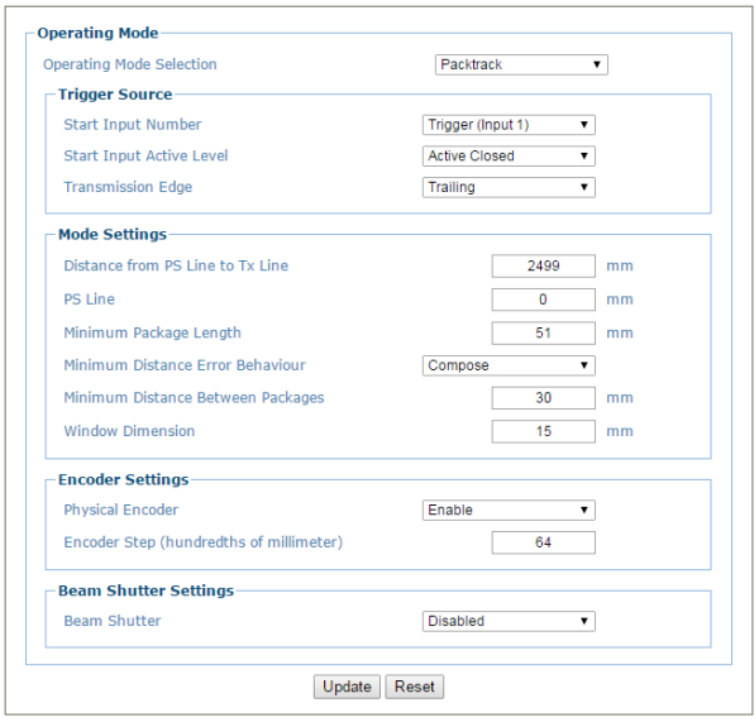

13. Adjust the barcode settings in **Modify Settings | Global Settings | Barcode Settings Table** according to the needs of your system.

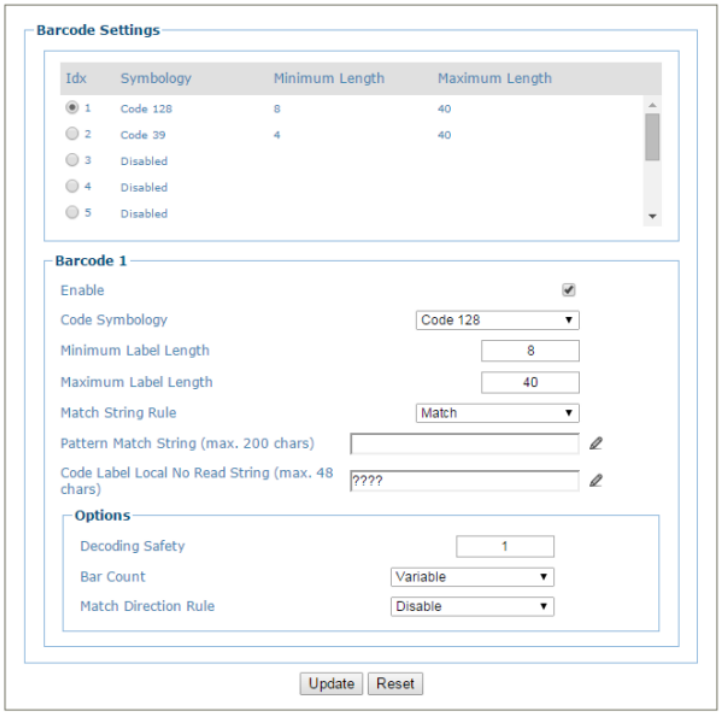

14. In **Modify Settings | Global Settings | Barcode Configuration** select single, multiple, or logical combination of labels, based on your application.

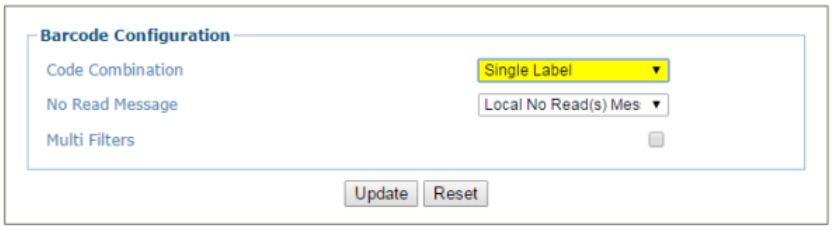

15. Move through the menu tree to configure **Serial Ports, Ethernet,** and **Messaging** settings based on your application requirements.

16. In **Global Settings | Messaging | Message Format** change the **Message Tx Selection** to **After Reading Phase OFF**.

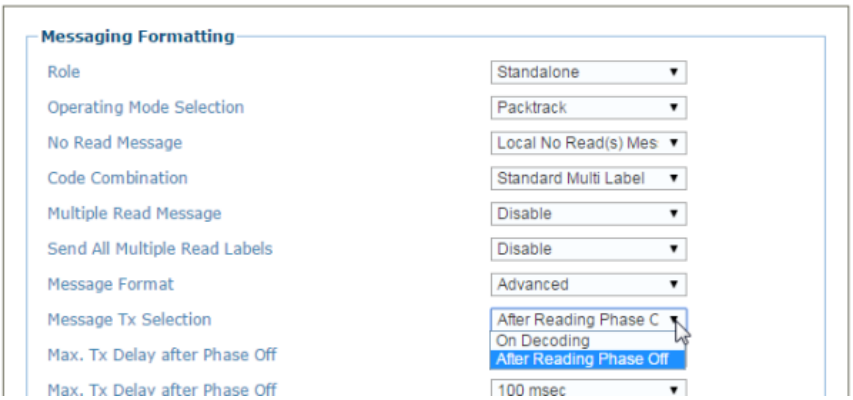

17. Run the **PackTrack** calibration procedure *(see section 5.6).*

18. When the scanner(s) has been configured and calibrated, backup the system congfiguration using **Utilities | Backup or Restore.** It is recommended to save the system paramaters to *Flash Memory* on the MSC 900 and to a *File* on your computer.

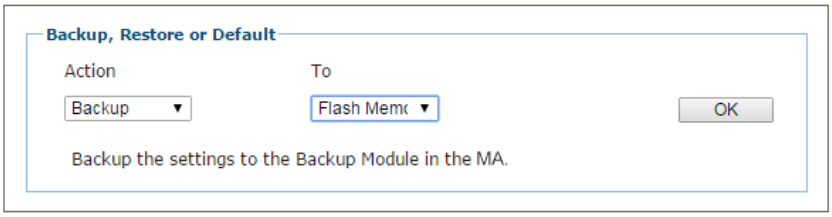

19. Select **Backup** from the **Action** drop-down list, and select **Flash Memory** from the **To** drop-down list.

20. Click **OK**. The following message will be displayed.

21. Next, select **Backup** from the **Action** drop-down list, and select **File** from the **To** drop-down list.

22. Click **OK** to download the configuration text file (param.txt) to your computer.

5.4 LED INDICATORS

The BCL 900i barcode scanners have several tube LEDs spanning the top and front panel.

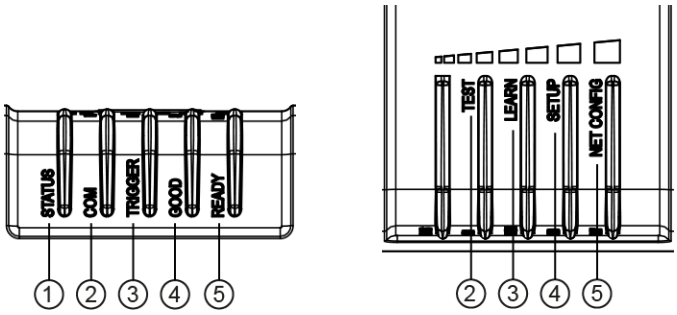

1. STATUS
2. COM/TEST
3. TRIGGER/LEARN
4. GOOD/SETUP
5. READY/NETCONFIG

Figure 32: LED Indicators Front and Top Views

The indicators have the following meanings:

LED	Description
STATUS	Flashes **RED** on a NO READ
COM / TEST	Flashes **YELLOW** to indicate data transmitting from main serial port. **NOTE:** When operation mode is set to PackTrack *(see section 4.5.1,* these LEDs are inactive on slave scanners.
TRIGGER / LEARN	Flashes **YELLOW** to indicate an active external presence sensor. **NOTE:** When operation mode is set to PackTrack *(see section 4.5.1),* these LEDs are inactive on slave scanners.
GOOD / SETUP	Flashes **GREEN** to indicate a barcode was successfully read.
READY / NETCONFIG	Solid **GREEN** indicates the device is ready to operate.

For alternate functions, *see 5.5.1 Human Machine Interface* below.

5.5 CONTROL PANEL BUTTONS

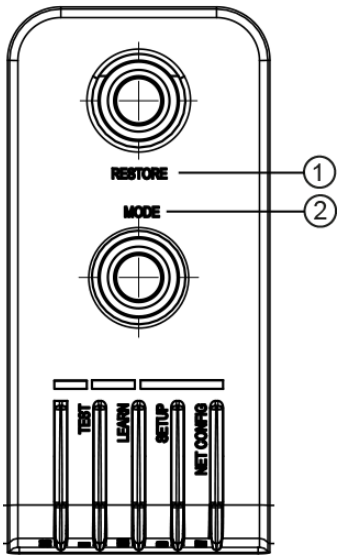

① RESTORE
② MODE

Figure 33: Control Panel Buttons

5.5.1 Human Machine Interface

The the intuitive Human Machine Interface is designed to improve ease of installation and maintenance.

Status information is clearly presented by means of the five colored LEDs, whereas the single push button gives immediate access to the following relevant functions:

- **TEST** with bar graph visualization to check static reading performance
- **LEARN** to self-detect and auto-configure for reading unknown codes
- **SETUP** (Not used at this time)
- **NETCONFIG** to locate and configure slave scanners in a array (tunnel)

HMI FUNCTIONS (MODE)

Quick access to the following functions is provided by an easy procedure using the push button MODE:

1. Press the button (the Status LED will give a visual feedback).
2. Hold the button until the specific function LED is on (**TEST, LEARN, SETUP,** or **NETCONFIG**).
3. Release the button to enter the specific function.

Once button is pressed and held, the cycle of LEDs activation is as follows:

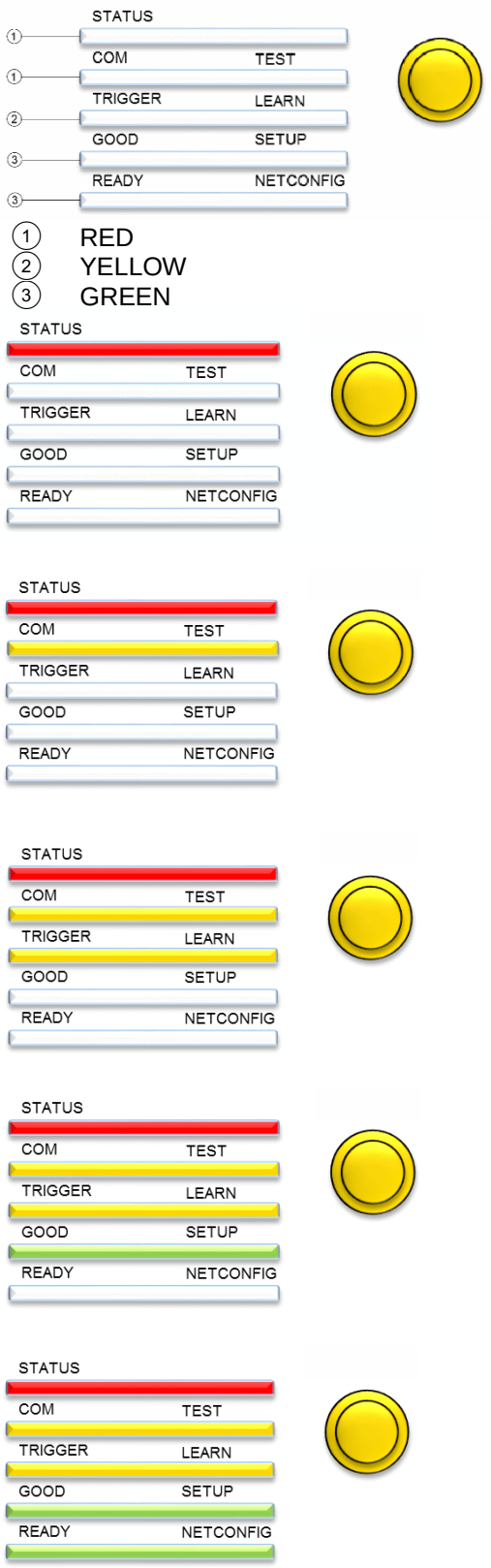

Figure 34: HMI LED modes

TEST MODE

Once entered, the five LEDs are activated and if the scanner starts reading barcodes. The LEDs indicate the read rate percentage. In case of a NO READ condition, only the Status LED is on and blinks.

The LEDs indicate the read rate percentage as follows:

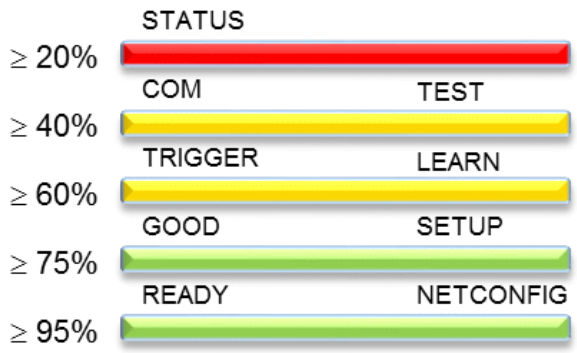

To exit the **Test Mode**, press the **MODE** push button once.

NOTE: By default, the Test exits automatically after two minutes.

LEARN

Once entered, the **LEARN** LED blinks and scanner starts a procedure to automatically detect and recognize barcodes, which are presented to it.

Place a barcode into the scan line and the **LEARN** LED goes solid for a short time as Processing and Decoding parameters are successfully saved.

If the calibration cannot be reached after a timeout of about 3 (three) minutes, the scanner will exit Learn Mode without saving the parameters.

SETUP

Not used at this time.

NETCONFIG

Once entered from a Master scanner in a multi-scanner array (tunnel), the system detects and identifies Slave scanners in the array. The Slave scanners (and the Master) will then be available in the User Interface *(see chapter **4**).*

Press the MODE button once again to exit.

5.5.2 Restore Button and Other Functions

Function	Description
Scanner Replacement	Hold down **RESTORE** button until all LEDs turn on. After all LEDs go off, then READY LED comes back on. Parameters stored in the MA 900 are now being used in the scanner.
Software Recovery Mode	Hold down **MODE** button while scanner is powered up.
Reset Scanner to Factory Defaults	Hold down **MODE** and **RESTORE** buttons while scanner powers. When default is successful, all LEDs will flash 3 times.

5.6 PACKTRACK™

PackTrack is a patented operating mode for Omni-Directional Reading Stations used to read and correctly assign codes read on different packs when placed in the scanner Reading Area at the same time.

In fact, in the following example, the codes of two or more consecutive packs are found at the same time in the scanner reading area. Therefore, the condition occurs where, in the sequence of the two packs, the code of the second pack is read first, just before the code of the previous pack. A system without **PackTrack** would assign the code of the second pack to the first pack and vice versa, thus causing a gross error in sortation.

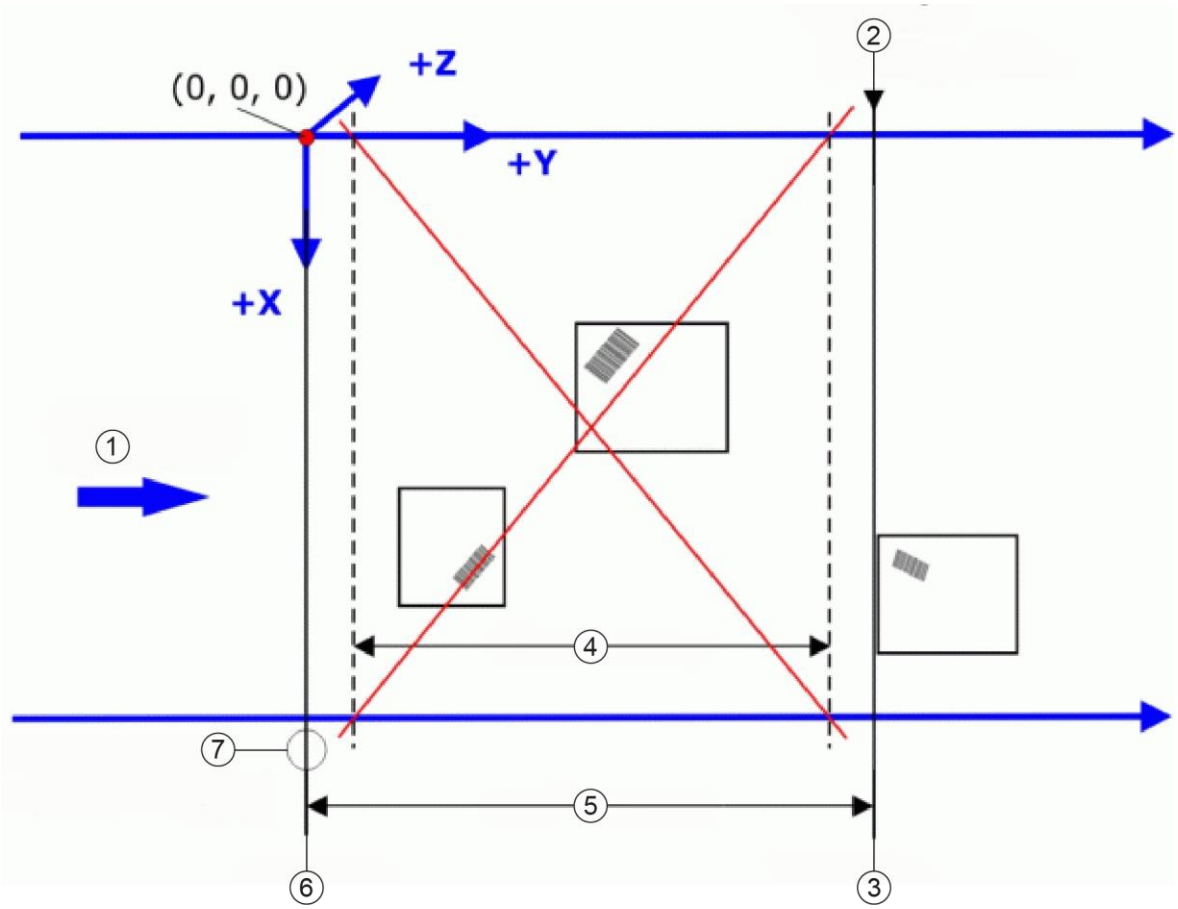

1. Conveyor Direction
2. End of Tracking Area
3. Tx Line
4. Reading Area
5. Tracking Area
6. PS Line
7. Photocess or equivalent signal

Figure 35: Tracking Problem

PackTrack uses a right-handed reference system where the **X** axis coincides with the Photoelectric Sensor line, the **Y** axis coincides with the conveyor direction, and the **Z** axis is oriented upwards from the conveyor (see figure below). The arrows point in the positive direction. The coordinate point of origin (0,0,0) is on the left edge of the conveyor as illustrated.

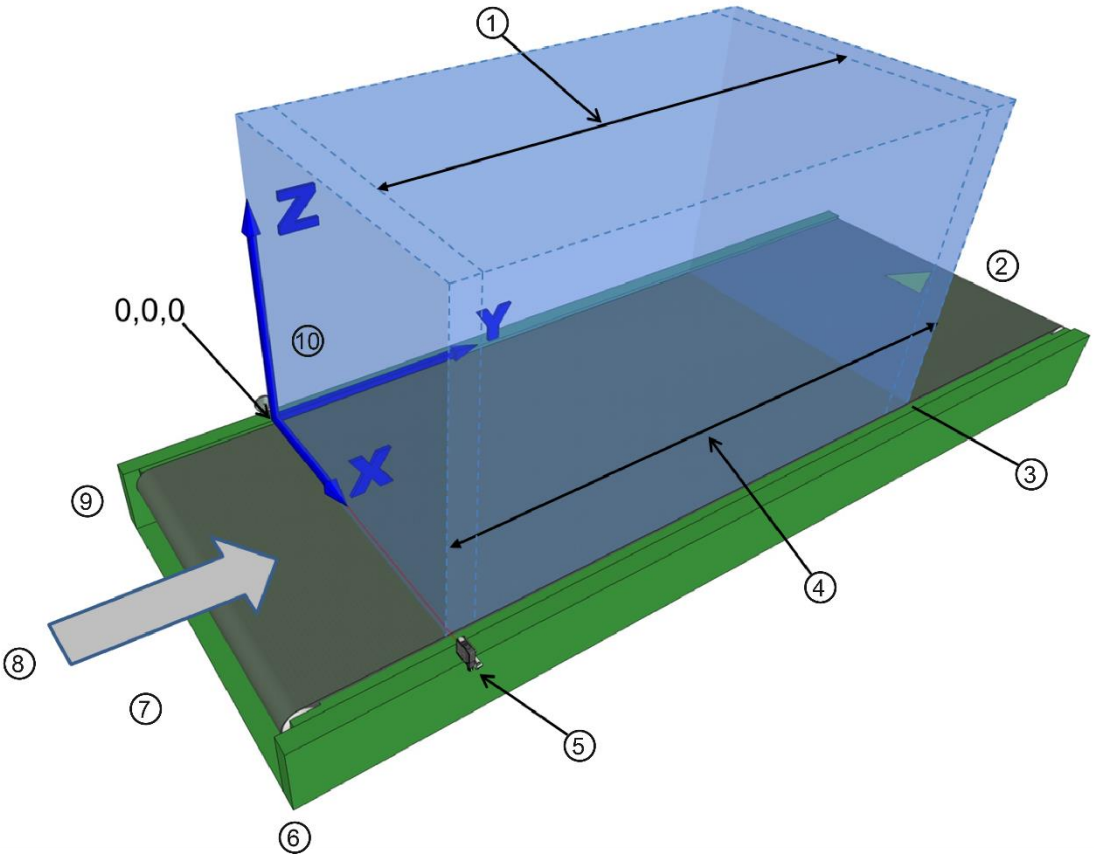

1. Reading Area
2. Downstream
3. Transmit (Tx) Point End of Tracking
4. Tracking Area
5. Photoelectric Sensor or equivalent trigger signal (X-coordinate)
6. Right Side
7. Upstream
8. Conveyor Direction
9. Left Side
10. XYZ Coordinate Orientation

Figure 36: Tracking Area

This coordinate system is absolute for the reading station, i.e. valid for all the scanners independently from their position or orientation with respect to the conveyor. For this reason, after the **PackTrack** configuration (and calibration) has been correctly performed, when a barcode is under the beam to be read by the scanners, its position is defined by the coordinates of its central point, independently from which scanner is reading it.
Step-by-step procedures for calibrating Top-Mounted *(see 5.6.2)* and Side-Mounted *(see 5.6.3)* barcode scanners are described below.

5.6.1 Using the PackTrack Wizard

Before you begin calibration:

1. In **Modify Settings | Global Settings | Barcode Settings**, select and configure a system barcode.

2. In **Modify Settings | Global Settings | Barcode Configuration**, create a **Global No Read message** you can easily recognize, such as **NO READ**.

3. In **Modify Settings | Global Settings | Operating Mode**, select **PackTrack** as your **Operating Mode Selection**. Make sure the mode settings and encoder settings match your system parameters.

4. Navigate to **Diagnostics | Read Test**.

5. Place a system barcode in the scan line of the barcode scanner.

6. Click **Start Test**. The scanner should successfully read the barcode. If it doesn't, read successfully or registers a low read rate, check the system specifications for mounting distance and barcode specifications. Then make adjustments as necessary and repeat the test. If the scanner continues to have problems reading the barcode, contact Leuze electronic (www.leuze.de).

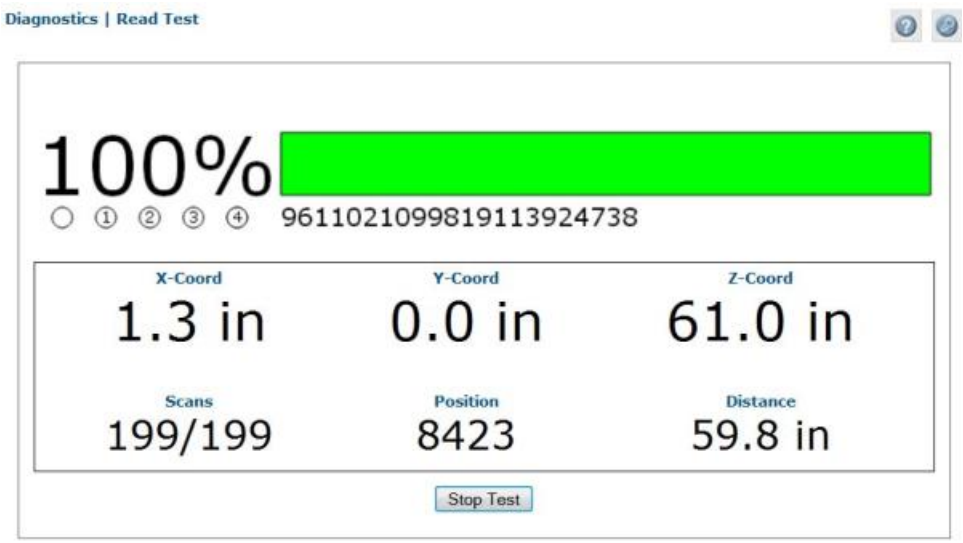

7. Click **Stop Test**.

To access the PackTrack Wizard:

1. In the tree menu under **Modify Settings**, navigate to **Device Settings | Device Name (if applicable) | Mounting**. The **Mounting** window opens.

2. Select **PackTrack Calibration** from the Mounting Specifications drop-down list.

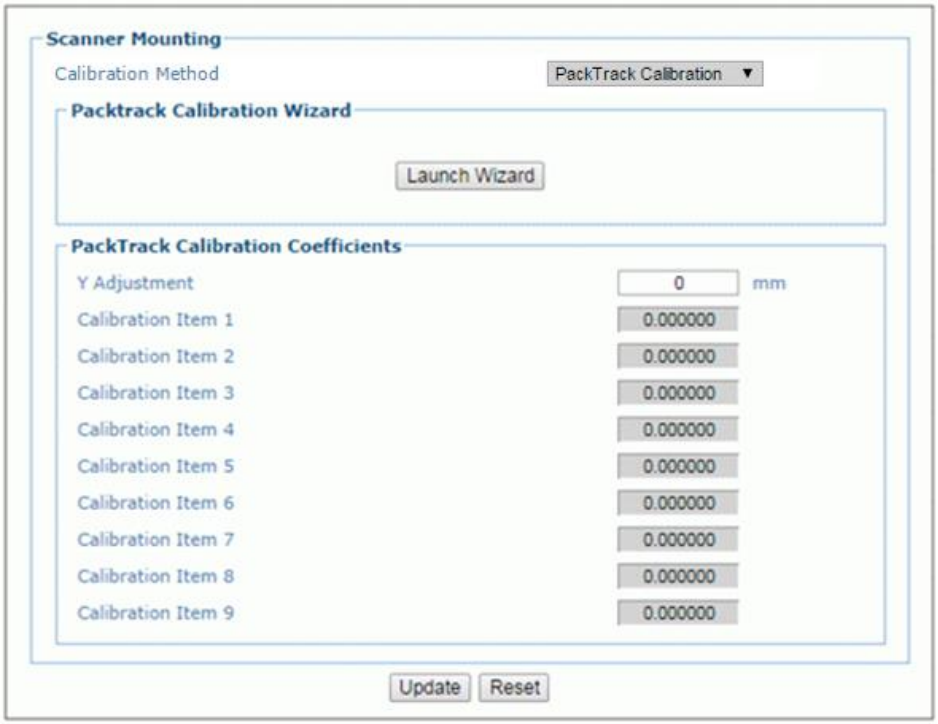

3. Click **Launch Wizard**. The **PackTrack Calibration Wizard** window opens.

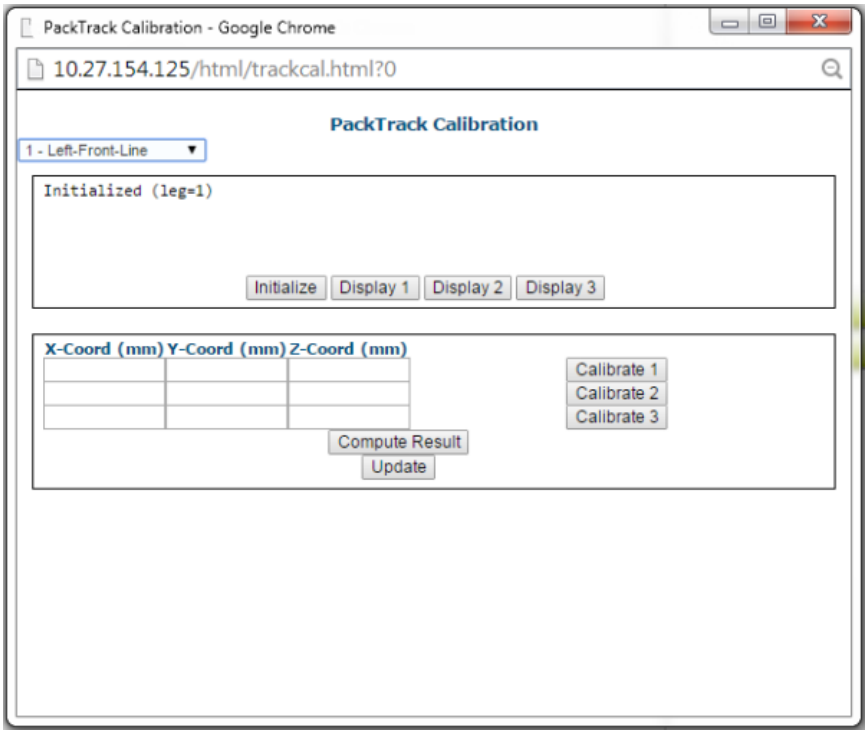

The **PackTrack Calibration Wizard** asks you to physically measure and enter barcode coordinates for the extremes of your barcode scanning system. You will measure and enter XYZ coordinates for barcodes in three different locations along the barcode scanners laser line(s) for each system scanner, as shown for **top-mounted** and **side-mounted** scanners in the illustrations below.

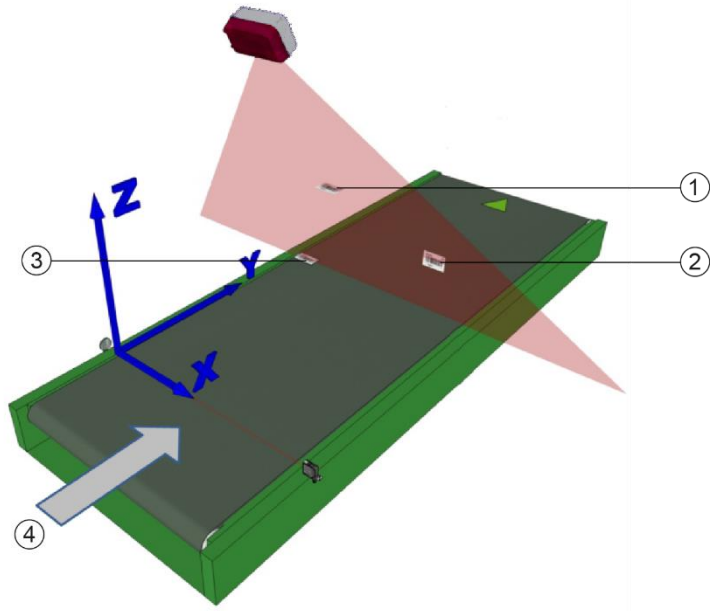

1. Centered above conveyor bed at top of tallest box
2. At mid-height on right edge of conveyor bed
3. Left side laying on conveyor bed
4. Conveyor Direction

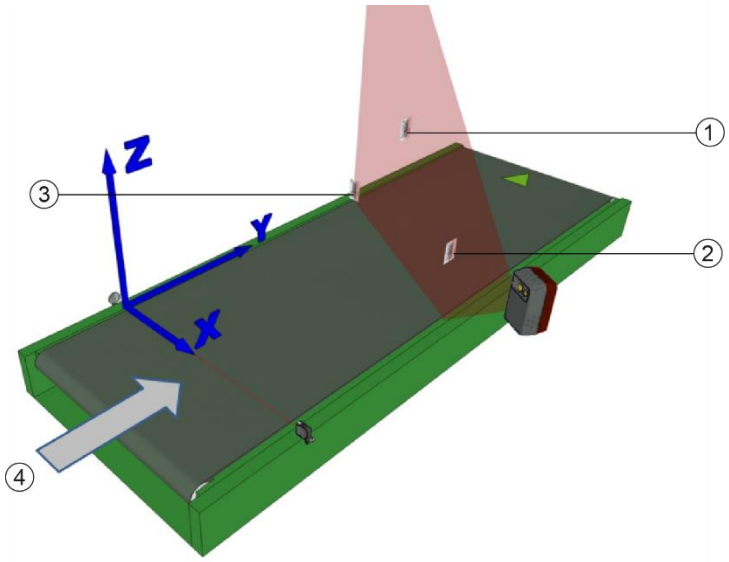

1. Centered above conveyor bed at top of tallest box
2. At mid-height on right edge of conveyor bed
3. Left side close to conveyor bed
4. Conveyor Direction

Figure 37: Barcode locations for Top Mount and Side Mount barcode scanners

NOTE: A barcode test chart is included in the box with each scanner, and a code from the chart can be used for the PackTrack calibration. You may also use a standard barcode from your specific application, however, test the code to make sure the scanner reads it at 100% using **Diagnostics | Read Test** in the User Interface *(see 4.7.2).*

5.6.2 Top-Mounted Barcode Scanner Calibration Using PackTrack

NOTE: It is not possible to illustrate every possible installation angle and scanner mounting position in this manual. Use the following steps as a general guide to calibrating each system scanner using barcodes in three positions. You will need to make adjustments to the label/box position based on your situation. It is, however, important to note the fixed XYZ coordinates of the conveyor.

With the belt stopped, measure and enter the barcode XYZ coordinate data for each scanner as follows:

1. Make sure that the intended scanner (in a multi-head system) has been selected from the drop-down lists at the top of the wizard window.

2. Start by laying a system barcode on the conveyor bed in the laser line as close to the left edge (X=0 edge) as possible. See illustration below.

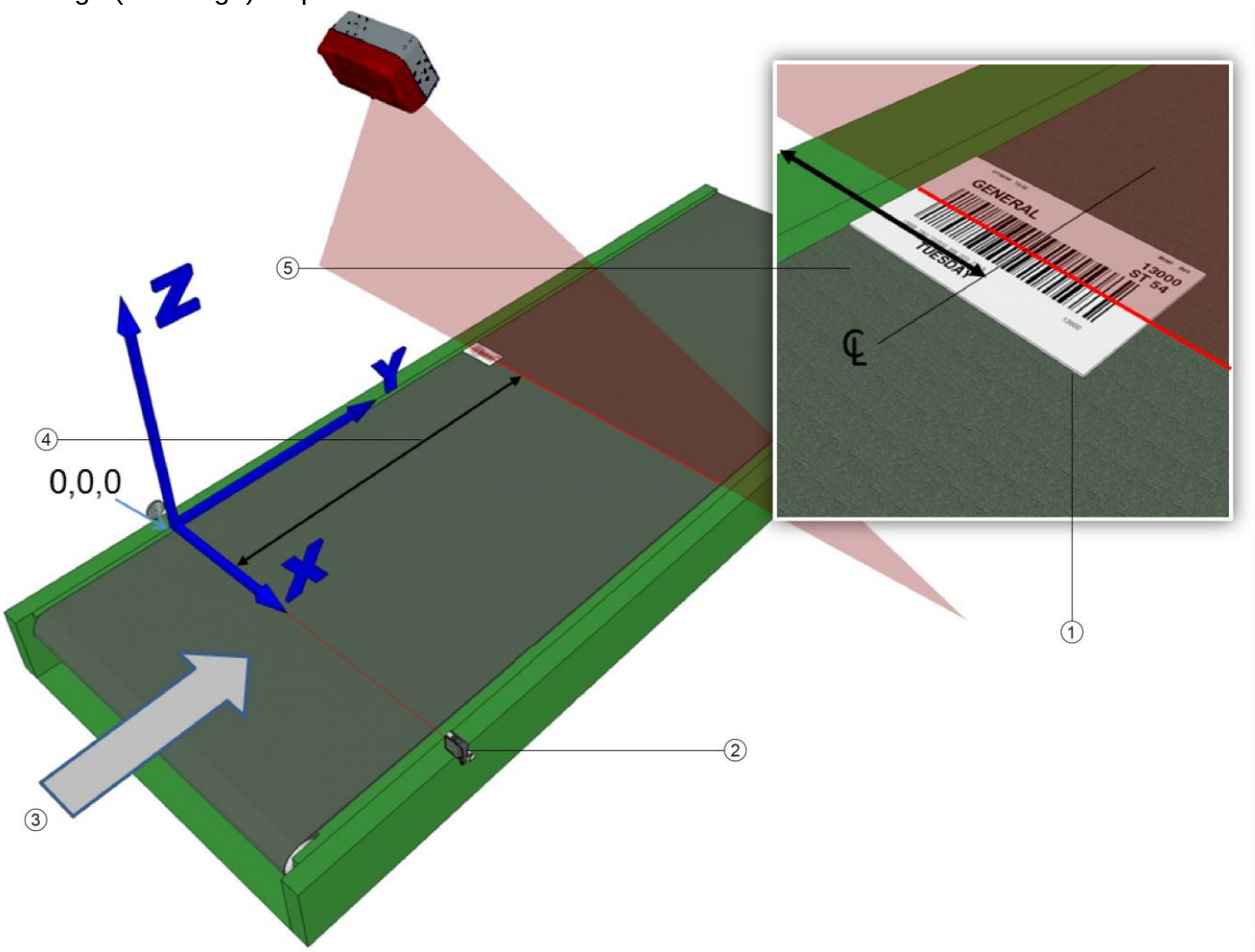

1. Z-distance – Conveyor bed surface to code (Z = 0 with code laid on conveyor)
2. Trigger
3. Conveyor Direction
4. Y-distance – Trigger to Scan Line
5. X-distance – Conveyor bed edge to center of barcode

Figure 38: Top-read 1st barcode placement

3. Measure the distance for **X** from the edge of the conveyor bed to the center of the barcode, and enter that distance in the first box under **X-Coord (mm)** in the **PackTrack Calibration Wizard**.

   Your measurements will likely differ from those shown below.

X-Coord (mm)	Y-Coord (mm)	Z-Coord (mm)
100		

4. Measure the distance for **Y** from the trigger (PS line) to the barcode scanner's laser line on the barcode, and enter that distance in the first box under **Y-Coord (mm)**.

   Your measurements will likely differ from those shown below.

X-Coord (mm)	Y-Coord (mm)	Z-Coord (mm)
100	70	

5. Measure the distance for **Z** from the conveyor bed to the barcode, and enter that distance in the first box under **Z-Coord (mm)**. Since the barcode is laying on the conveyor bed, the value should be "0."

   Your measurements will likely differ from those shown below.

X-Coord (mm)	Y-Coord (mm)	Z-Coord (mm)
100	70	0

6. Click **Calibrate 1**. PackTrack data is displayed for the first code.

```
Code 1 -  X/Y/Z:      100.000000 / 70.000000 / 0.000000
(Leg 1)   Dist/Angle: 1003.550000 / 0.118065
```

Initialize | Display 1 | Display 2 | Display 3

X-Coord (mm)	Y-Coord (mm)	Z-Coord (mm)
100	70	0

Calibrate 1
Calibrate 2
Calibrate 3

Compute Result
Update

7. Next, place a barcode overhanging the top corner of the tallest box specified for your scanning system as shown in the illustration below. Center one edge of the box on the conveyor and align the other edge with the laser line as shown.

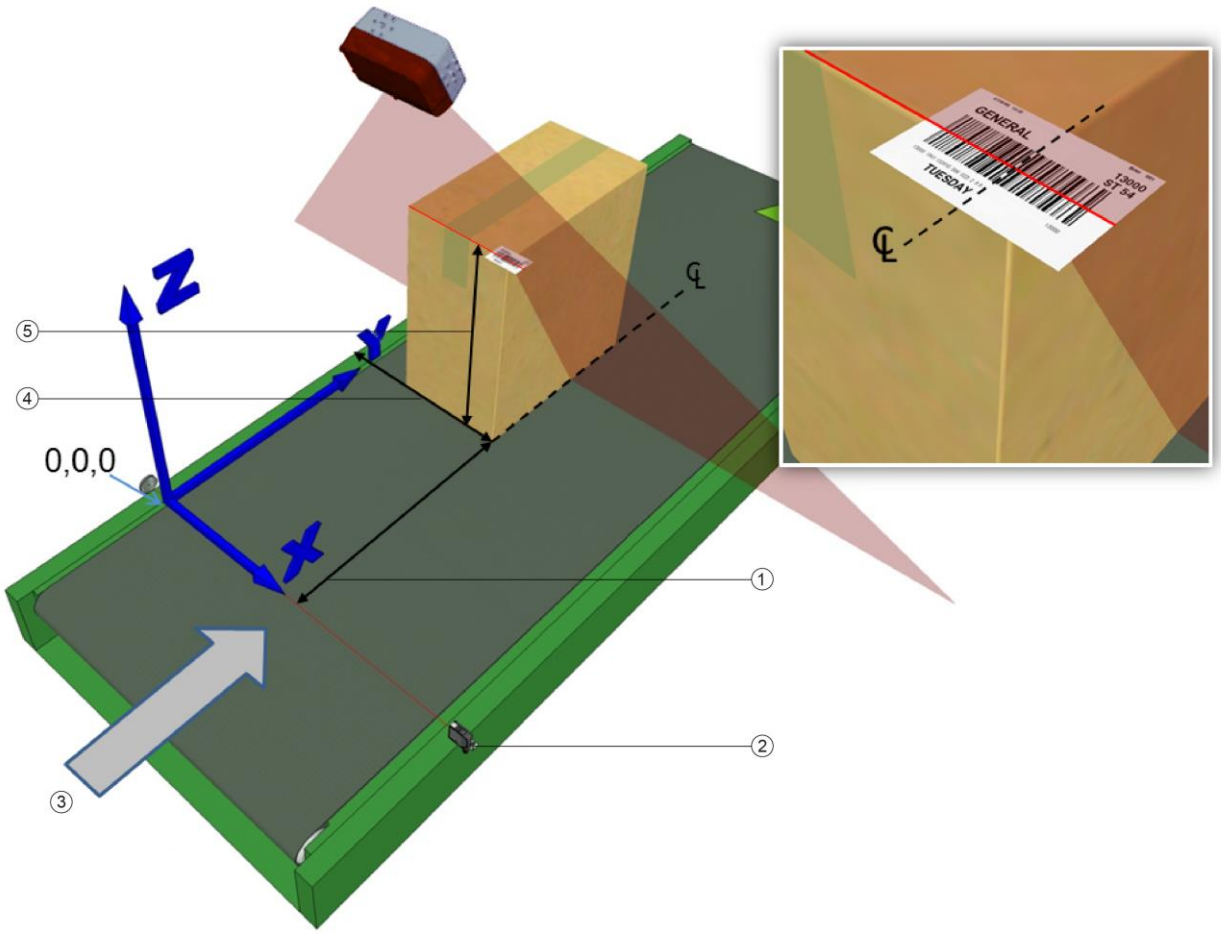

1. Y-distance – Trigger to scan line (box edge)
2. Trigger
3. Conveyor Direction
4. X-distance – Conveyor bed edge to center of barcode
5. Z-distance – Conveyor bed surface to scan line (top of box)

Figure 39: Top-read 2nd barcode placement

8. Measure the distance for **X** from the left edge of the conveyor bed to the center of the barcode (centered side edge of box), and enter that distance in the first box under **X-Coord (mm)**.

   Your measurements will likely differ from those shown below.

X-Coord (mm)	Y-Coord (mm)	Z-Coord (mm)
100	70	0
280		

9. Measure the distance for **Y** from the trigger (PS line) to the barcode scanner's laser line on the barcode (back edge of box), and enter that distance in the first box under **Y-Coord (mm)**.

Your measurements will likely differ from those shown below.

X-Coord (mm)	Y-Coord (mm)	Z-Coord (mm)
100	70	0
280	165	

10. Measure the distance for **Z** from the conveyor bed to the barcode (top of box), and enter that distance in the first box under **Z-Coord (mm)**.

Your measurements will likely differ from those shown below.

X-Coord (mm)	Y-Coord (mm)	Z-Coord (mm)
100	70	0
280	165	160

11. Click **Calibrate 2**. PackTrack data is displayed for the second code.

```
Code 2 -  X/Y/Z:       280.000000 / 165.000000 / 160.000000
(Leg 1)   Dist/Angle: 816.225000 / -0.073688
```

Initialize | Display 1 | Display 2 | Display 3

X-Coord (mm)	Y-Coord (mm)	Z-Coord (mm)
100	70	0
280	165	160

Calibrate 1
Calibrate 2
Calibrate 3

Compute Result
Update

12. Finally, place a system barcode on the back right edge of a box, about halfway up the scanner field of view as shown in the illustration below.

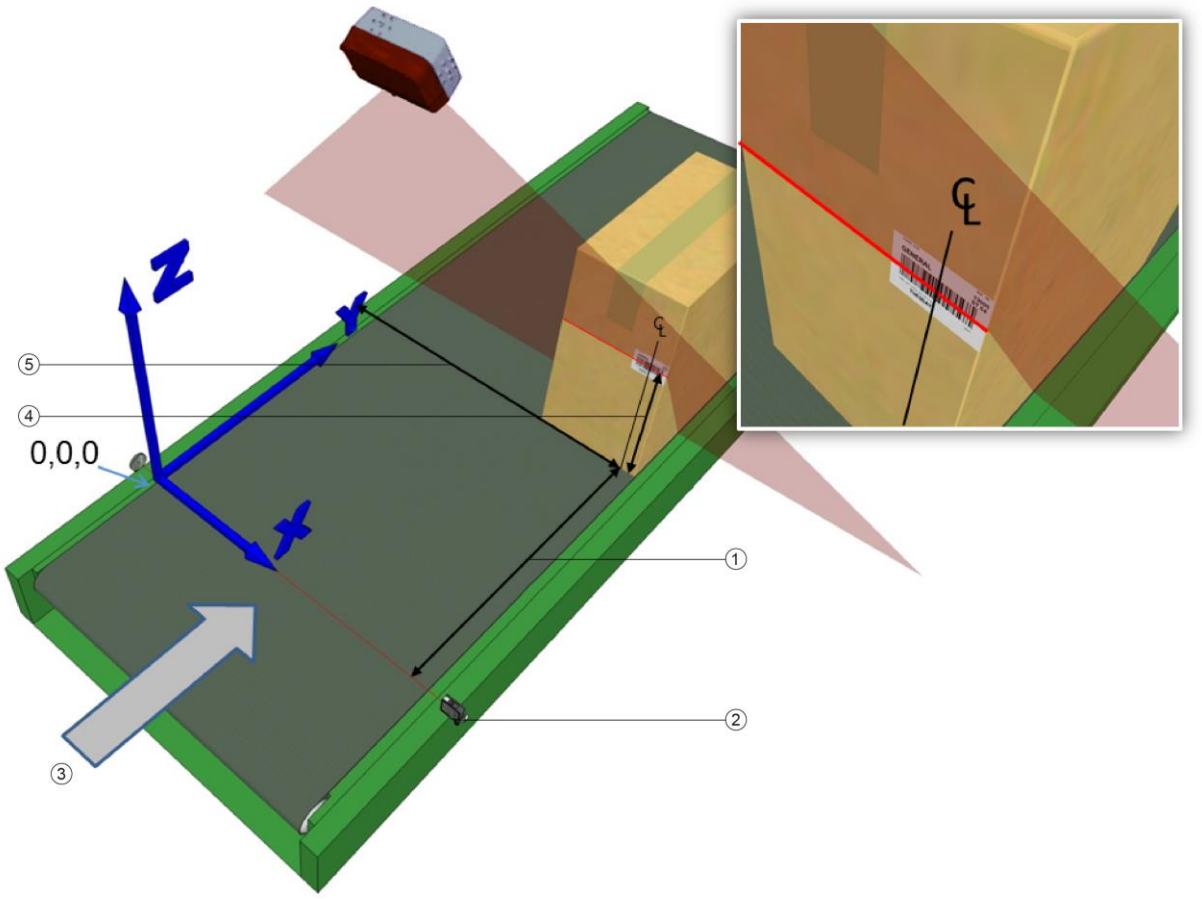

1. Y-distance – Trigger to scan line (box edge)
2. Trigger
3. Conveyor Direction
4. Z-distance – Conveyor bed surface to scan line
5. X-distance – Conveyor bed edge to center of code

Figure 40: Top-read 3rd barcode placement

13. Measure the distance for **X** from the left edge of the conveyor bed to the center of the barcode, and enter that distance in the first box under **X-Coord (mm)**.

    Your measurements will likely differ from those shown below.

X-Coord (mm)	Y-Coord (mm)	Z-Coord (mm)
100	70	0
280		

14. Measure the distance for **Y** from the trigger (PS line) to the barcode scanner's laser line on the barcode (back edge of box), and enter that distance in the first box under **Y-Coord (mm)**.

Your measurements will likely differ from those shown below.

X-Coord (mm)	Y-Coord (mm)	Z-Coord (mm)
100	70	0
280	165	

15. Measure the distance for **Z** from the conveyor bed to the laser line intersecting the barcode, and enter that distance in the first box under **Z-Coord (mm)**.

Your measurements will likely differ from those shown below.

X-Coord (mm)	Y-Coord (mm)	Z-Coord (mm)
100	70	0
280	165	160

16. Click **Calibrate 3**. PackTrack data is displayed for the third code.

```
Code 3 -  X/Y/Z:      400.000000 / 120.000000 / 80.000000
(Leg 1)   Dist/Angle: 930.525000 / -0.181289
```

Initialize | Display 1 | Display 2 | Display 3

X-Coord (mm)	Y-Coord (mm)	Z-Coord (mm)
100	70	0
280	165	160
400	120	80

Calibrate 1
Calibrate 2
Calibrate 3

Compute Result
Update

17. Click Compute Results. The results are displayed at the top of the **PackTrack Calibration** window.

```
Result:  -1.064197   0.053396 172.585510
         -0.037263  -0.484000 556.741272
         -0.042378  -0.835064 837.203674
```

Initialize | Display 1 | Display 2 | Display 3

X-Coord (mm)	Y-Coord (mm)	Z-Coord (mm)
100	70	0
280	165	160
400	120	80

Calibrate 1
Calibrate 2
Calibrate 3

Compute Result
Update

18. Click **Update**. "Update Successful" should be displayed in the **PackTrack Calibration** window.

19. Close the **PackTrack Calibration Wizard** window. **PackTrack Calibration Coefficients** have been populated on the Scanner Mounting window.

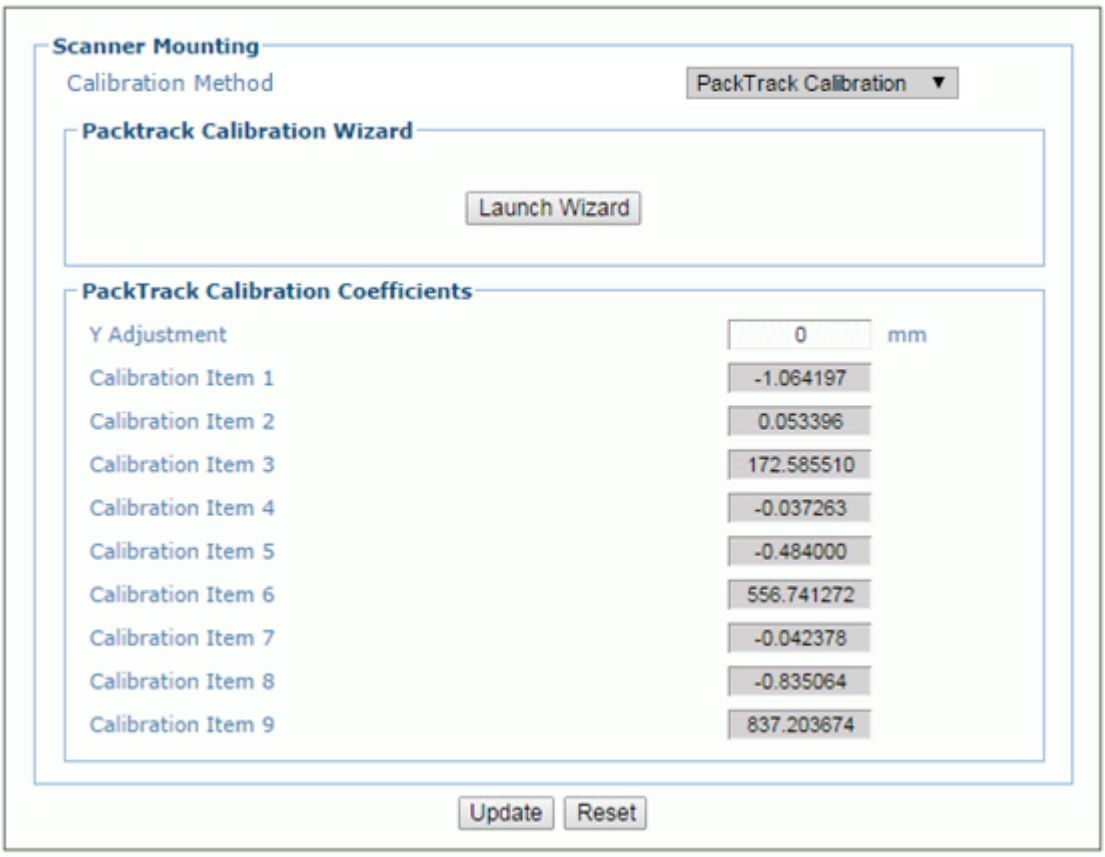

20. When you have finished making changes, click **Update** to save or click **Reset** to revert to the previously saved values.

21. See **Verifying PackTrack Calibration** below.

5.6.3 Side-Mounted Barcode Scanner Calibration Using PackTrack

NOTE: It is not possible to illustrate every possible installation angle and scanner mounting position in this manual. Use the following steps as a general guide to calibrating each system scanner using barcodes in three positions. You will need to make adjustments to the label/box position based on your situation. It is, however, important to note the fixed XYZ coordinates of the conveyor.

With the belt stopped, measure and enter the barcode XYZ coordinate data for each scanner as follows:

1. Start by placing a system barcode hanging halfway past the back lower left edge of a box, and then place the box along the edge of the conveyor belt as shown in the illustration below.

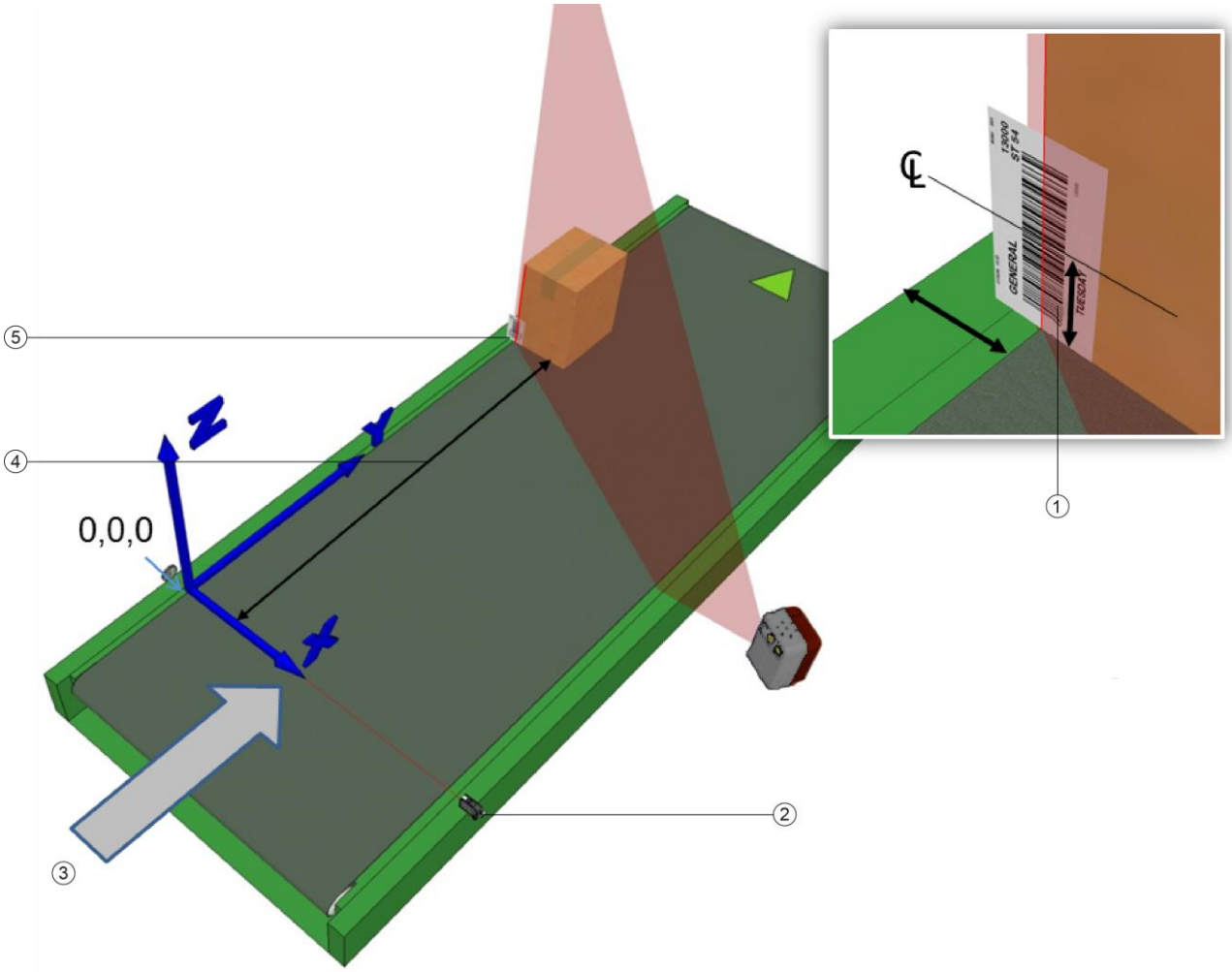

① Z-distance – Conveyor bed to center of barcode

② Trigger
③ Conveyor Direction
④ Y-distance – Trigger to Scan Line (Face of box)
⑤ X-distance – Conveyor bed edge to scan line

Figure 41: Side-read 1st barcode placement

2. Measure the distance for **X** from the edge of the conveyor bed to the laser line centered on the barcode, and enter that distance in the first box under **X-Coord (mm)** in the **PackTrack Calibration Wizard**.

   Your measurements will likely differ from those shown below.

X-Coord (mm)	Y-Coord (mm)	Z-Coord (mm)
100		

3. Measure the distance for **Y** from the trigger (PS line) to the back edge of the box, and enter that distance in the first box under **Y-Coord (mm)**.

   Your measurements will likely differ from those shown below.

X-Coord (mm)	Y-Coord (mm)	Z-Coord (mm)
100	70	

4. Measure the distance for **Z** from the conveyor bed to the center of the barcode, and enter that distance in the first box under **Z-Coord (mm)**.

   Your measurements will likely differ from those shown below.

X-Coord (mm)	Y-Coord (mm)	Z-Coord (mm)
100	70	50

5. Click **Calibrate 1**. PackTrack data is displayed for the first code.

```
Code 1 -   X/Y/Z:       100.000000 / 70.000000  50.000000
(Leg 1)    Dist/Angle: 1003.550000 / 0.118065
```

Initialize | Display 1 | Display 2 | Display 3

X-Coord (mm)	Y-Coord (mm)	Z-Coord (mm)
100	70	50

Calibrate 1
Calibrate 2
Calibrate 3

Compute Result
Update

6. Next, place a barcode overhanging the top corner of the tallest box specified for your scanning system as shown in the illustration below. Center the right edge of the box on the conveyor aligning the right back corner with the laser line as shown.

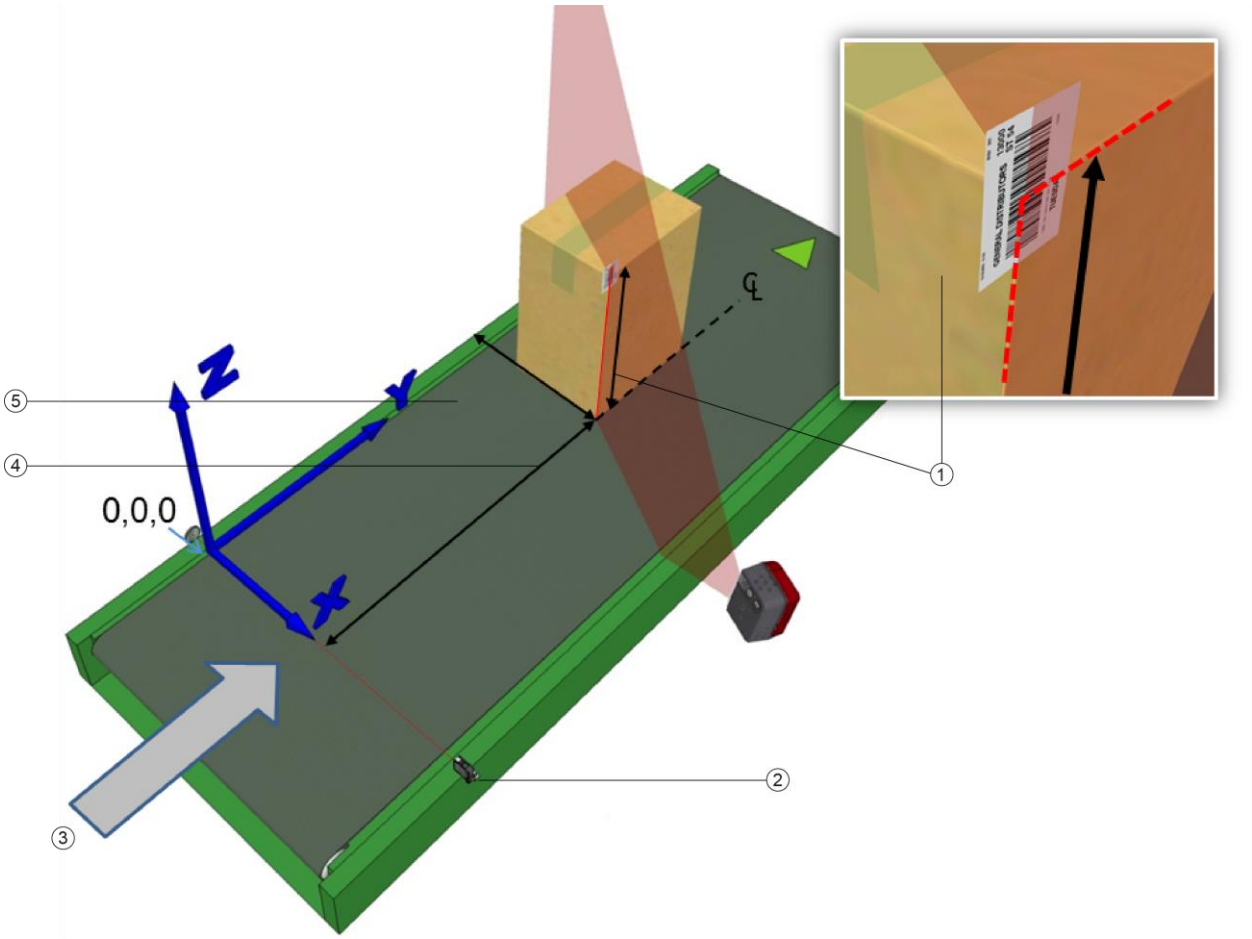

1. Z-distance – Conveyor bed to center of code (Top of box)
2. Trigger
3. Conveyor Direction
4. Y-distance – Trigger to Scan Line (Face of box)
5. X-distance – Conveyor bed edge to scan line

Figure 42: Side-read 2nd barcode placement

7. Measure the distance for **X** from the left edge of the conveyor bed to the center of the barcode (right edge of box), and enter that distance in the first box under **X-Coord (mm)**.

   Your measurements will likely differ from those shown below.

X-Coord (mm)	Y-Coord (mm)	Z-Coord (mm)
100	70	50
280		

8. Measure the distance for **Y** from the trigger (PS line) to the back edge of the box, and enter that distance in the first box under **Y-Coord (mm)**.

Your measurements will likely differ from those shown below.

X-Coord (mm)	Y-Coord (mm)	Z-Coord (mm)
100	70	50
280	165	

9. Measure the distance for **Z** from the conveyor bed to the center of the barcode (top of box), and enter that distance in the first box under **Z-Coord (mm)**.

Your measurements will likely differ from those shown below.

X-Coord (mm)	Y-Coord (mm)	Z-Coord (mm)
100	70	50
280	165	160

10. Click **Calibrate 2**. PackTrack data is displayed for the second code.

```
Code 2 -  X/Y/Z:       280.000000 / 165.000000 / 160.000000
(Leg 1)   Dist/Angle: 816.225000 / -0.073688
```

Initialize | Display 1 | Display 2 | Display 3

X-Coord (mm)	Y-Coord (mm)	Z-Coord (mm)
100	70	50
280	165	160

Calibrate 1
Calibrate 2
Calibrate 3

Compute Result
Update

11. Finally, place a system barcode on the back right edge of a box, about halfway up the scanner field of view as shown in the illustration below.

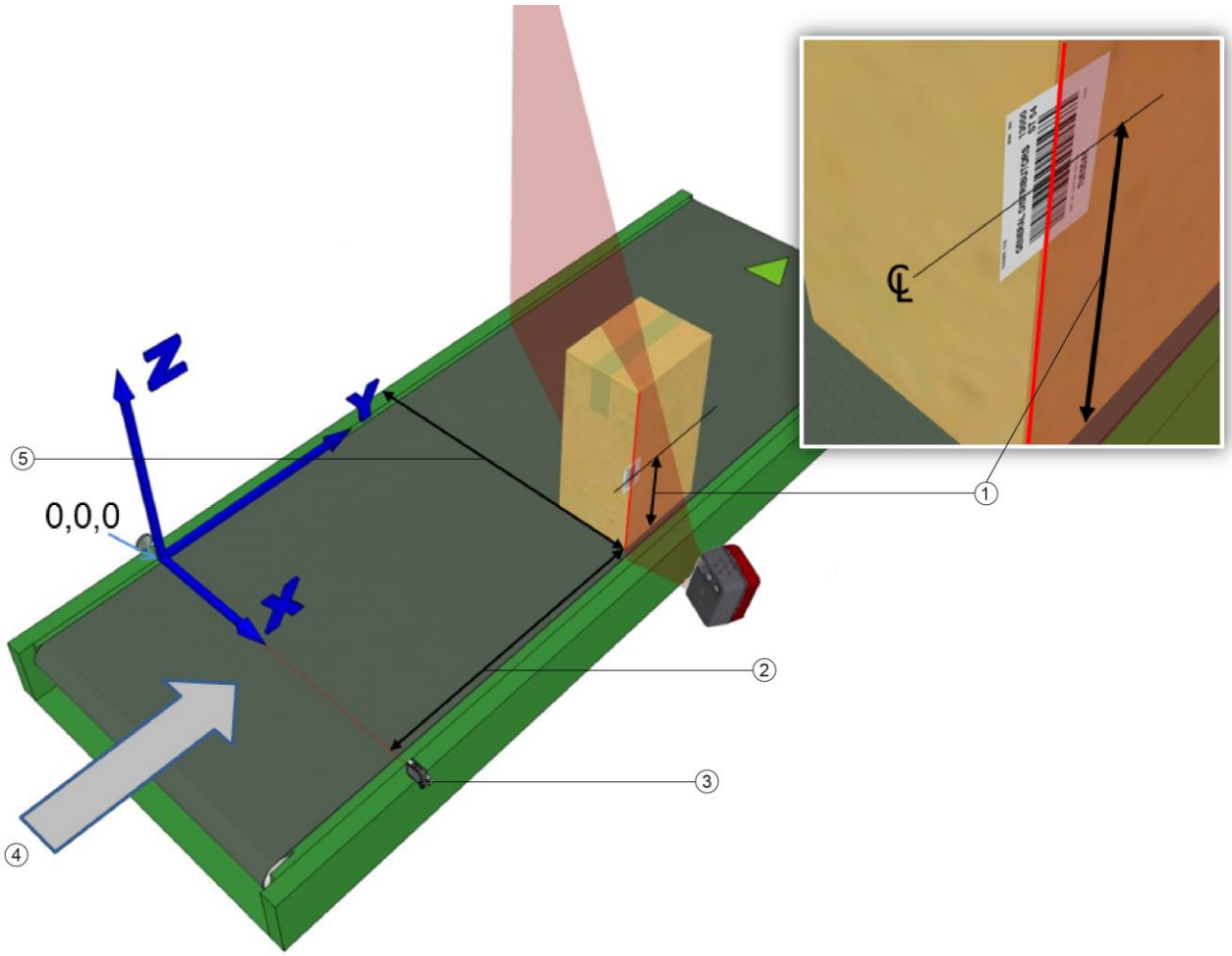

1. Z-distance – Conveyor bed to center of code (Top of box)
2. Y-distance – Trigger to Scan Line (Face of box)
3. Trigger
4. Conveyor Direction
5. X-distance – Conveyor bed edge to scan line

Figure 43: Side-read 3rd barcode placement

12. Measure the distance for **X** from the left edge of the conveyor bed to the center of the barcode, and enter that distance in the first box under **X-Coord (mm)**.

    Your measurements will likely differ from those shown below.

X-Coord (mm)	Y-Coord (mm)	Z-Coord (mm)
100	70	50
280	165	160
400		

13. Measure the distance for **Y** from the trigger (PS line) to the barcode scanner's laser line on the barcode (back edge of box), and enter that distance in the first box under **Y-Coord (mm)**.

Your measurements will likely differ from those shown below.

X-Coord (mm)	Y-Coord (mm)	Z-Coord (mm)
100	70	50
280	165	160
400	120	

14. Measure the distance for **Z** from the conveyor bed to the laser line intersecting the barcode, and enter that distance in the first box under **Z-Coord (mm)**.

Your measurements will likely differ from those shown below.

X-Coord (mm)	Y-Coord (mm)	Z-Coord (mm)
100	70	50
280	165	160
400	120	80

15. Click **Calibrate 3**. PackTrack data is displayed for the third code.

```
Code 3 -   X/Y/Z:       400.000000 / 120.000000 / 80.000000
(Leg 1)    Dist/Angle: 930.525000 / -0.181289
```

Initialize | Display 1 | Display 2 | Display 3

X-Coord (mm)	Y-Coord (mm)	Z-Coord (mm)
100	70	50
280	165	160
400	120	80

Calibrate 1
Calibrate 2
Calibrate 3
Compute Result
Update

16. Click Compute Results. The results are displayed at the top of the **PackTrack Calibration** window.

```
Result:  -1.064197   0.053396 172.585510
         -0.037263  -0.484000 556.741272
         -0.042378  -0.835064 837.203674
```

Initialize | Display 1 | Display 2 | Display 3

X-Coord (mm)	Y-Coord (mm)	Z-Coord (mm)
100	70	50
280	165	160
400	120	80

Calibrate 1
Calibrate 2
Calibrate 3
Compute Result
Update

17. Click **Update**. "Update Successful" should be displayed in the **PackTrack Calibration** window.

18. Close the PackTrack Calibration Wizard window. **PackTrack Calibration Coefficients** have been populated on the Scanner Mounting widow.

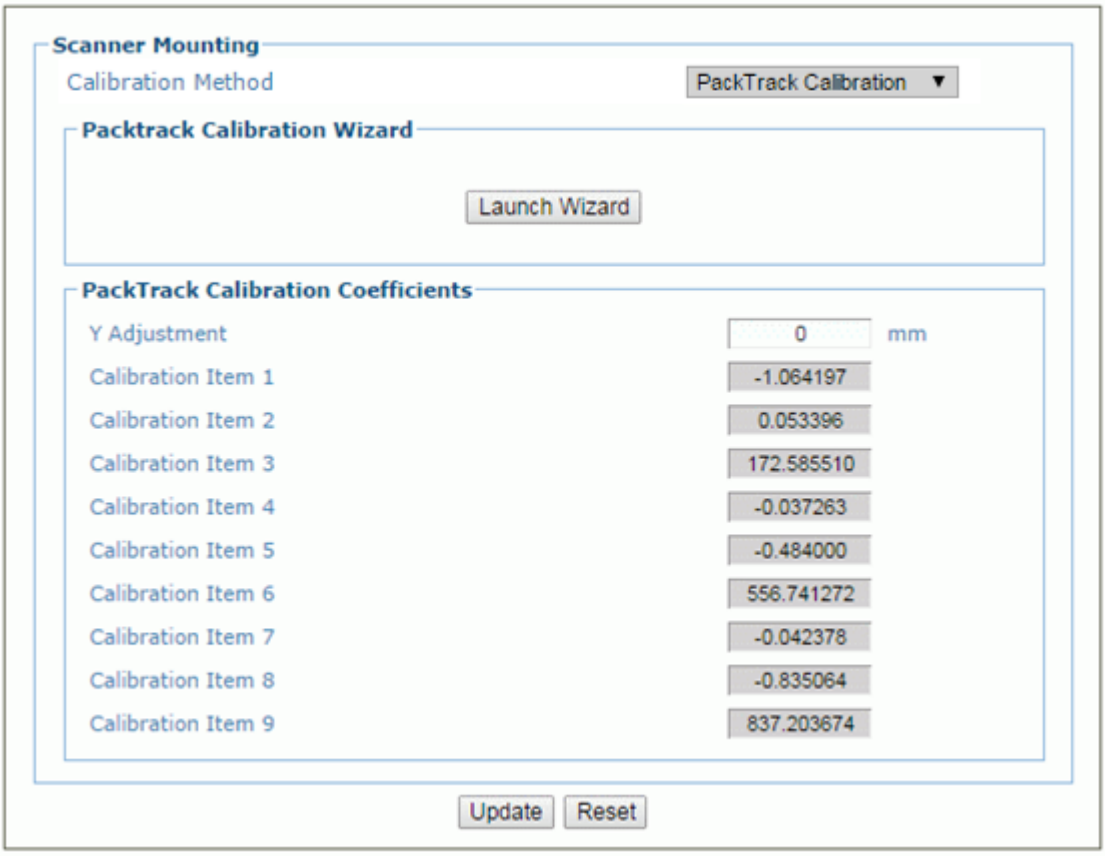

19. When you have finished making changes, click **Update** to save or click **Reset** to revert to the previously saved values.

20. See **Verifying PackTrack Calibration** below.

5.6.4 Bottom-Mounted Barcode Scanner Calibration Using PackTrack

When using the PackTrack wizard to calibrate a bottom read scanner, three barcode positions are still needed for accurate calibration. For the left and right sides of the conveyor, place a barcode label face-down, overhanging the corner of a typical box for your application, as shown below. Place another barcode label on the bottom of a box and place the code along the laser beam in the center of the conveyor bed, as shown in the illustration below.

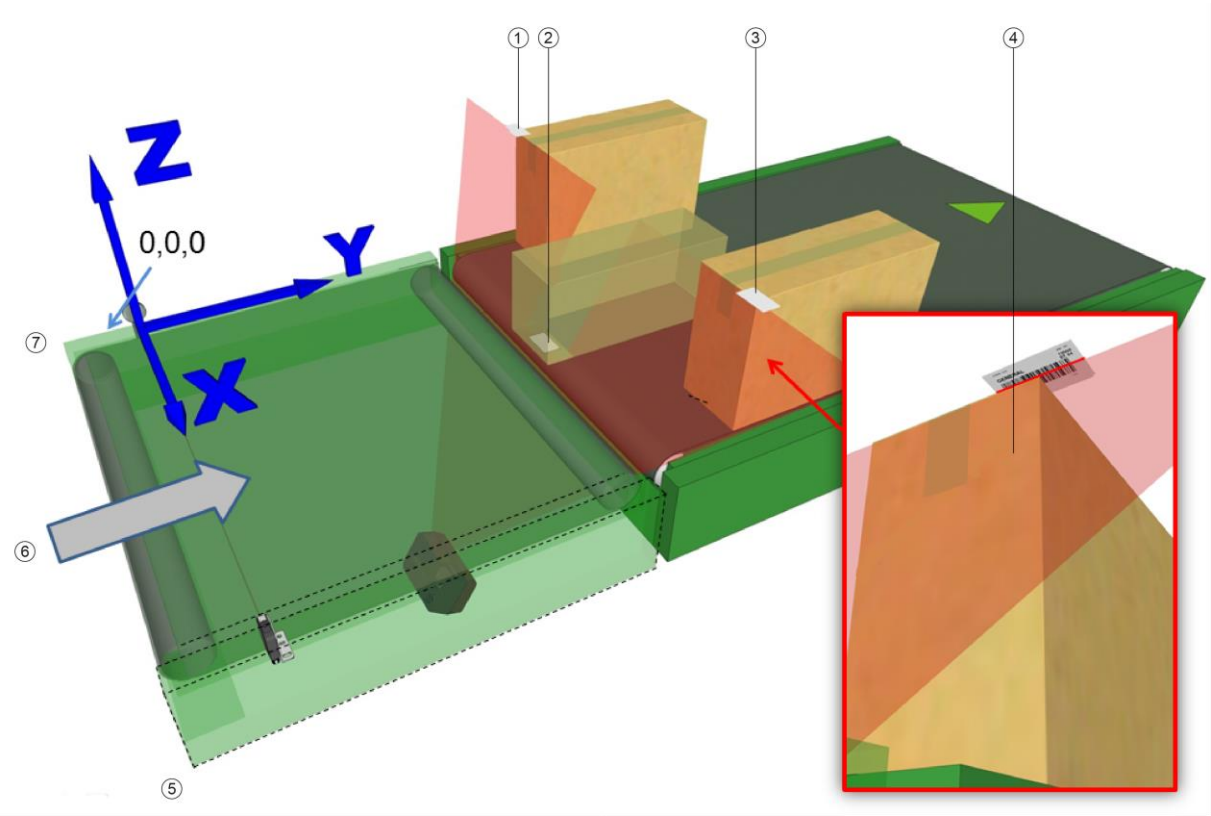

1. Left side, label face-down overhanging top of box
2. Centered on conveyor bed on bottom of box
3. Right side, label face-down overhanging top of box
4. Viewed from below
5. Right Side
6. Conveyor Direction
7. Left Side

As with the top and side-read examples in this section, input the X, Y, and Z coordinates for each code in the PackTrack wizard.

5.6.5 Verifying PackTrack Calibration

1. In the menu tree, navigate to **Diagnostics/Read Test**. The **Read Test** window opens.

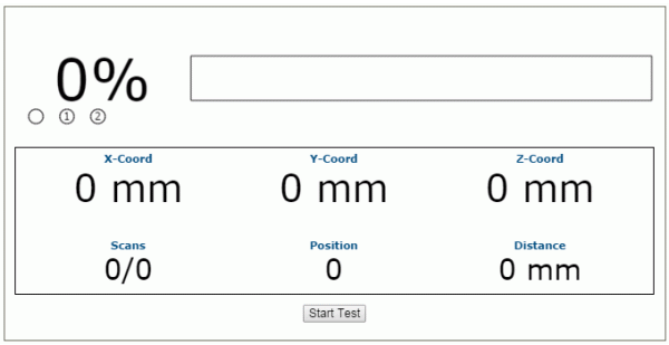

2. Place a barcode anywhere in the scanner's laser beam other than where you placed the labels for calibration.

3. Click **Start Test**. The system runs a test to identify the location of the barcode within the read area and displays the results in the Read Test window.

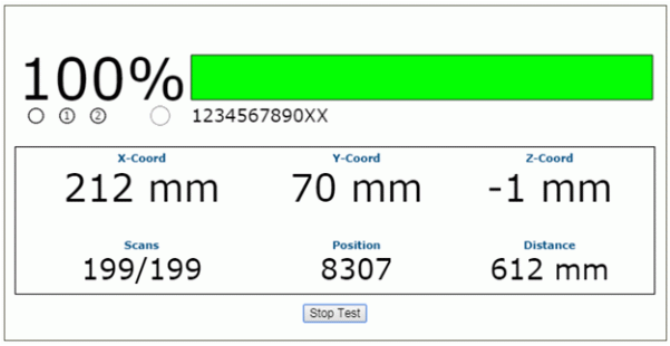

4. Physically Measure the X (from left edge), Y (From PS), and Z (code height) coordinates of your test barcode, and compare your measured results to the **Read Test** results. Your measured results and those displayed should be close (within a few millimeters) but do not need to be exact.

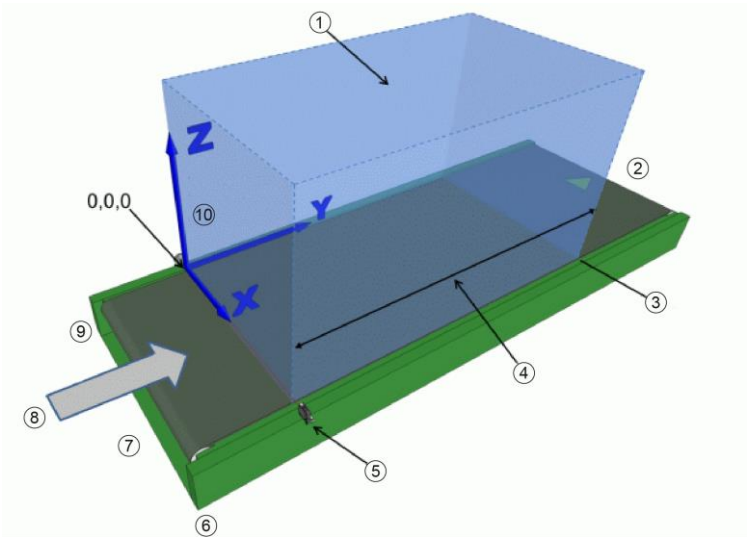

1. Reading Area
2. Downstream
3. Transmit (Tx) Point End of Tracking
4. Tracking Area
5. Photoelectric Sensor or equivalent trigger signal (X-coordinate)
6. Right Side
7. Upstream
8. Conveyor Direction
9. Left Side
10. XYZ Coordinate Orientation

Figure 44: Tracking Area

5. Next, in the menu tree, navigate to **Diagnostics/Monitor**.

6. Turn on conveyor, run a box with a readable barcode past the barcode scanner.

7. Check the **Monitor** to make sure the barcode on the box is being read. If you see a no read (the barcode doesn't read on the box), double check your physical measurements you entered in the **PackTrack Calibration Wizard,** and enter them again.

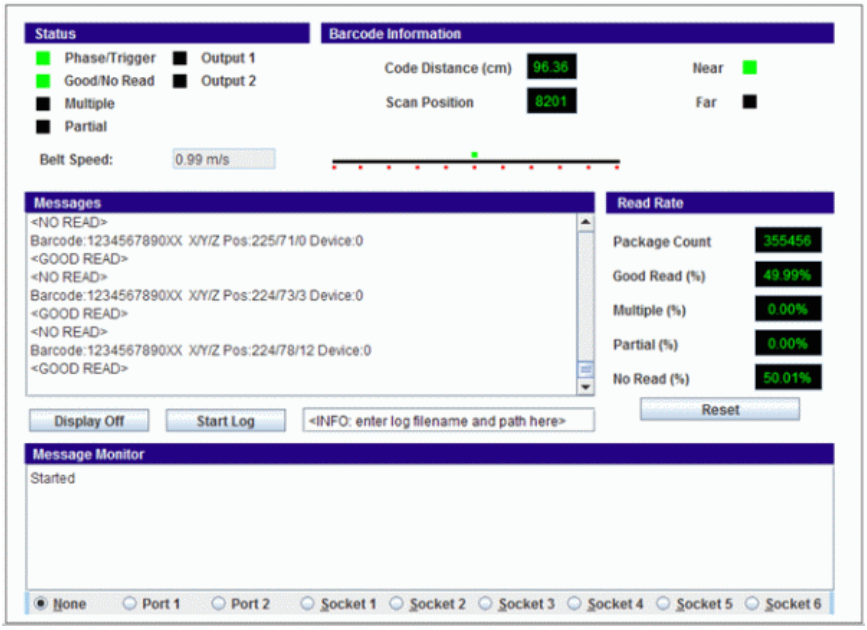
Status
Phase/Trigger
Output 1
Good/No Read
Output 2
Multiple
Partial
Belt Speed:
0.99 m/s
Barcode Information
Code Distance (cm)
96.36
Scan Position
8201
Near
Far
Messages
<NO READ>
Barcode:1234567890XX X/Y/Z Pos:225/71/0 Device:0
<GOOD READ>
<NO READ>
Barcode:1234567890XX X/Y/Z Pos:224/73/3 Device:0
<GOOD READ>
<NO READ>
Barcode:1234567890XX X/Y/Z Pos:224/78/12 Device:0
<GOOD READ>
Read Rate
Package Count
355456
Good Read (%)
49.99%
Multiple (%)
0.00%
Partial (%)
0.00%
No Read (%)
50.01%
Reset
Display Off
Start Log
<INFO: enter log filename and path here>
Message Monitor
Started
None
Port 1
Port 2
Socket 1
Socket 2
Socket 3
Socket 4
Socket 5
Socket 6

5.7 REPLACING AN INSTALLED BCL 900I

If for any reason, a scanner fails, it can be replaced quickly with a spare unit with parameters recovered from flash memory or a saved parameter file.

NOTE: This procedure assumes that system parameters have been properly saved as described in sections 4.8.1, 5.2 and 5.3.

NOTE: If you are not sure the replacement scanner has been defaulted to factory settings, it is a good idea to default the unit before installing it in a system. To do this:

1. Attach a power cable to the replacement scanner and apply power.
2. Simultaneously, press and hold down the yellow MODE and Restore buttons on the unit until the LEDs flash three times.
3. Release the buttons. The unit is now reset to the factory default.

5.7.1 Replacing a Standalone Scanner Using Restore

A standalone scanner (a single scanner not connected to an array/tunnel) can be replaced using the Restore button located near the LEDs on the side of the housing.

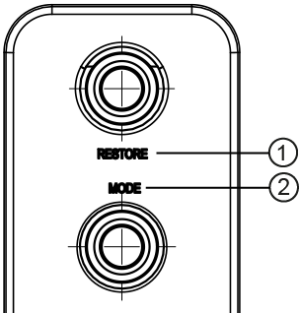

① RESTORE
② MODE

Figure 45: Restore Button

To replace the scanner using Restore:

1. Remove power from the existing scanner and remove the power and I/O cables.
2. Label the cables attached to ETH1 and/or ETH2 so you can easily identify where they were connected, then remove the cables.
3. Detach the existing scanner from its mounting bracket, leaving the bracket attached to the mounting structure.
4. Attach the replacement scanner to the mounting bracket.
5. Reattach the power, I/O, ETH1 and/or ETH2 cables.
6. Apply power to the system.

7. Once the scanner has booted up and the **READY** LED lights solid green, press and hold the **RESTORE** button until all of the LEDs turn on, indicating that the parameters are being restored from the MA 900's Backup Module.
8. Release the **RESTORE** button. The green **READY** LED should come back on.

5.7.2 Replacing a Slave Scanner in an Array/Tunnel Automatically

The User Interface provides an option for automatically replacing a slave scanner in a tunnel when the system is configured. To enable this option in the User Interface, select **Modify Setting/System Info** from the User Interface menu tree. The System Info window opens.

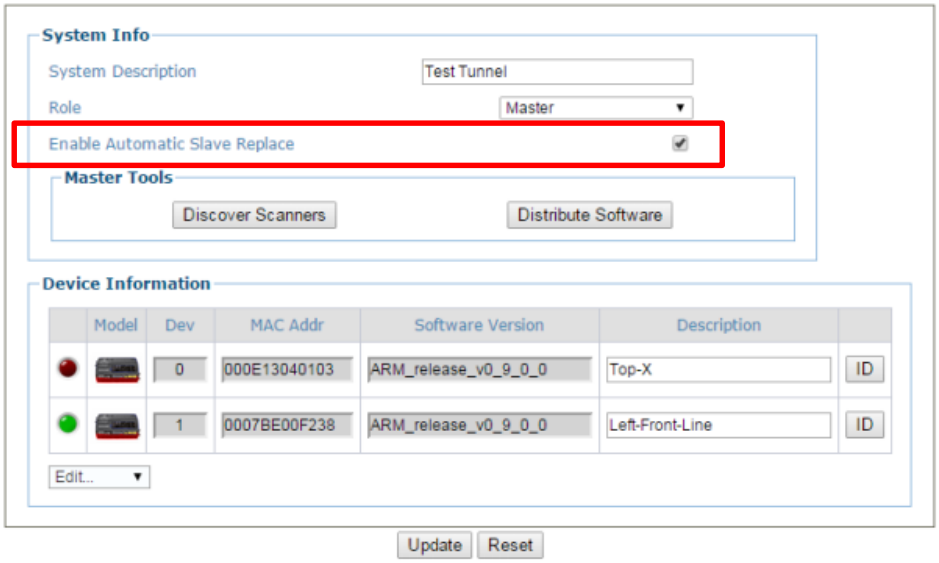

Select the **Enable Automatic Slave Replacement** check box, click **Update**, and save the system parameters as described in *sections 4.8.1, 5.2 and 5.3.*

If the **Enable Automatic Slave Replacement** check box has been selected and saved in the system parameters, use the following procedure to replace a slave scanner:

1. Remove power from the array.

2. Remove the power and I/O cables from the scanner being replaced.

3. Label the cables attached to ETH1 and/or ETH2 so you can easily identify where they were connected, then remove the cables.

4. Detach the existing scanner from its mounting bracket, leaving the bracket attached to the mounting structure.

5. Attach the replacement scanner to the mounting bracket.

6. Reattach the power, I/O, ETH1 and/or ETH2 cables.

7. Apply power to the array. The system will automatically find and download system parameters to the replacement scanner.

5.7.3 Replacing a Slave Scanner in an Array/Tunnel Using Restore

If the **Enable Automatic Slave Replacement** check box has NOT been selected and saved in the system parameters, use the following procedure to replace a slave scanner:

1. Remove power from the array.
2. Remove the power and I/O cables from the scanner being replaced.
3. Label the cables attached to ETH1 and/or ETH2 so you can easily identify where they were connected, then remove the cables.
4. Detach the existing scanner from its mounting bracket, leaving the bracket attached to the mounting structure.
5. Attach the replacement scanner to the mounting bracket.
6. Reattach the power, I/O, ETH1 and/or ETH2 cables.
7. Apply power to the array.
8. Once the scanner has booted up and the **READY** LED lights solid green, press and hold the **RESTORE** button until all of the LEDs turn on, indicating that the parameters are being restored from the MA 900's Backup Module or MSC 900 flash memory.
9. Release the **RESTORE** button.

5.7.4 Replacing a Master Scanner in an Array/Tunnel Using Restore

1. Remove power from the array.
2. Remove the power and I/O cables from the Master scanner being replaced.
3. Label the cables attached to ETH1 and/or ETH2 so you can easily identify where they were connected, then remove the cables.
4. Detach the existing scanner from its mounting bracket, leaving the bracket attached to the mounting structure.
5. Attach the replacement master scanner to the mounting bracket.
6. Reattach the power, I/O, ETH1 and/or ETH2 cables.
7. Apply power to the array.
8. Once the scanner has booted up and the **READY** LED lights solid green, press and hold the **RESTORE** button until all of the LEDs turn on, indicating that the parameters are being restored from the MA 900's Backup Module or MSC 900 flash memory.
9. Release the **RESTORE** button.

5.7.5 Checking the Operation of the Replacement

With the scanner replaced and your PC connected to the system, navigate to **Modify Setting/System Info** from the User Interface menu tree. The System Info window opens.

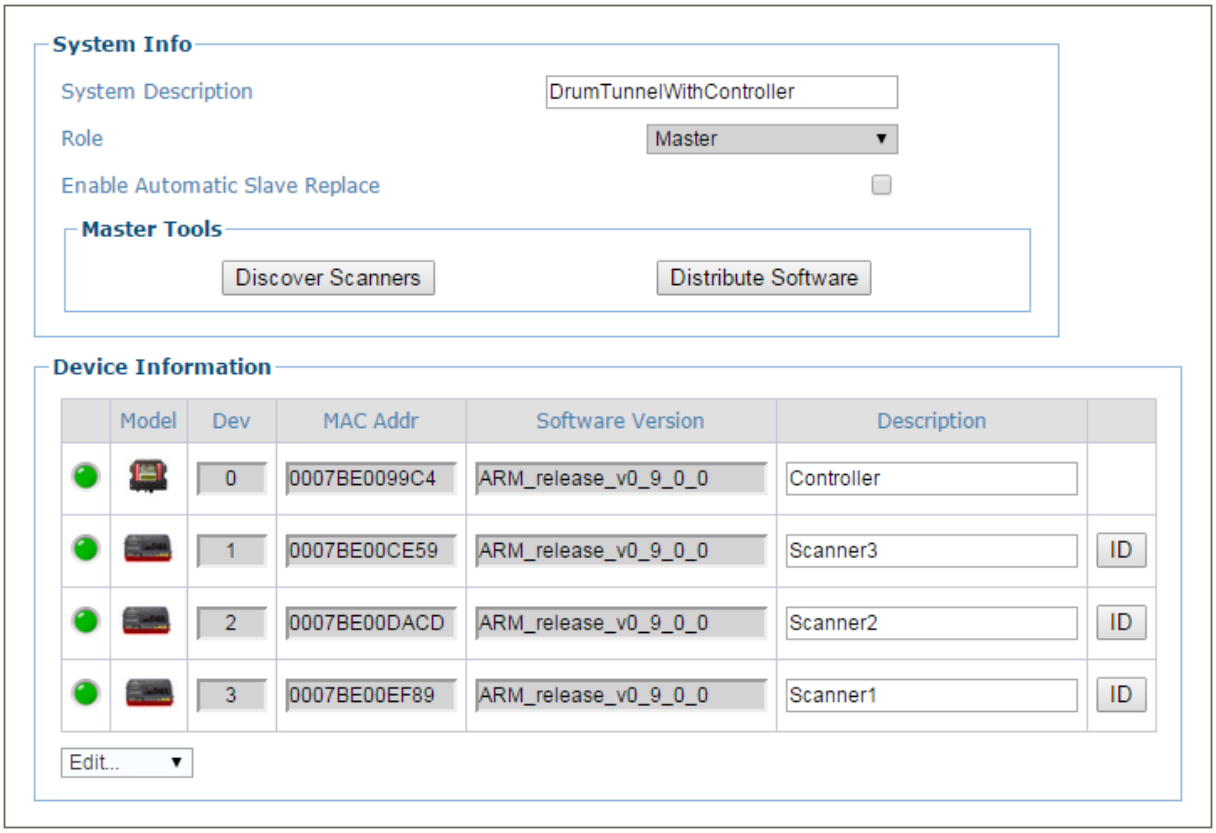

The **Device Information** section of the window should now list all of the scanners (and an MSC 900 Controller if used), including the scanner you just replaced.

5.8 TYPICAL LAYOUTS

The following typical layouts refer to system hardware configurations, but also require the correct setup of the software configuration parameters

Other layouts require the use of a specific MSC 900 Controller model.

The accessories and cables indicated in the following figures are Leuze electronic products. We suggest their use to guarantee the correct system functioning.

5.8.1 Large Synchronized Network Layout

When building a large local EBC (Ethernet Based Connectivity) network an MSC 900 Controller should be used. In this case the MSC 900 unit acts as the system master and is connected to the host through one of its interfaces.

- The MSC 900 can be connected to the Host in several different layouts depending on the controller model.

  The MSC 900 Standard models provide both Ethernet connections (direct or through a Hub/Switch) and point-to-point connections on the Main interface using either RS232 or RS422 full-duplex;

  Fieldbus models, additionally provide the model specific Fieldbus: Profibus, Profinet IO, etc.

- All scanners act as slaves and are connected to the MSC 900 through the EBC interface.

External devices such as a presence sensor and an encoder are all connected either to the MSC 900 through its M12 circular connectors, or to the MA 900 Connection Box (connected to the Controller), wiring the signals through the MA 900 compression connectors.

MSC 900: Basic Layout: Ethernet TCP/IP To Host

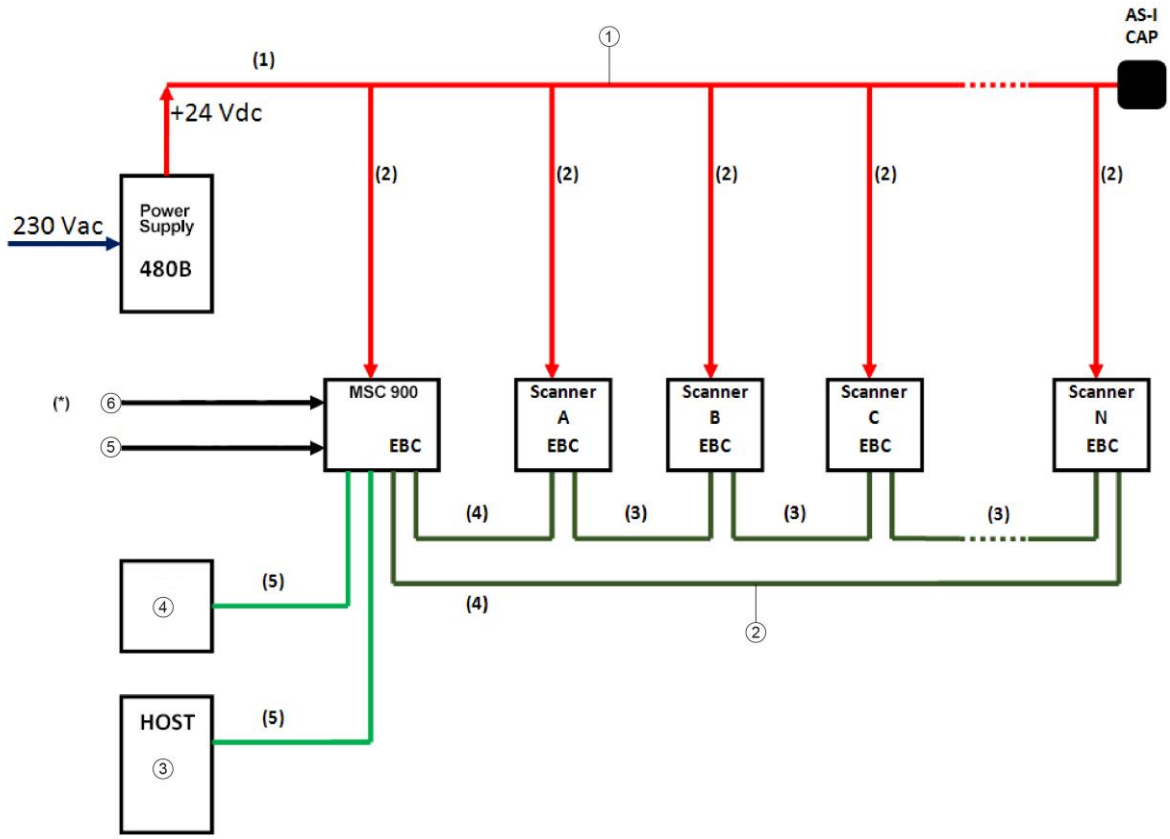

1. AS-Interface (AS-I) Power Backbone
2. EBC Ring layout
3. Ethernet
4. Laptop
5. Encoder (M12)
6. Trigger (M12)

(1) PWR Cable AS-I 10 m/25 m
(2) PWR Cable M12 – AS-I 1 m/2 m
(3) Ethernet Cable M12-M12 Straight-Straight 1 m/3 m/5 m
(4) Ethernet Cable M12-M12 Straight-90° 1 m/3 m/5 m
(5) Ethernet Cable M12-RJ45 Straight-90° 5 m

(*) If you prefer an alternative wiring connection, rather than the M12 connection type, use the MA 900 accessory, as shown below.

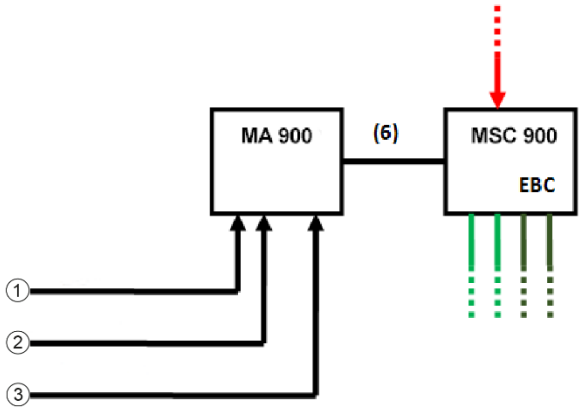

1 Trigger
2 Encoder
3 Other I/O

(6) KB 900 - 1000 MSC

Figure 46 – Large Synchronized Network with BCL 900i Scanners

MSC 900: Basic Layout: COM To Host

If the Host supports a COM communication type (RS232 or RS422) rather than the Ethernet one, use the MA 900 accessory, as shown below.

The remaining part of the layout (scanners, PWR etc.) does not change.

As already mentioned, the MA 900 can also be used to wire the Trigger and Encoder signals (and other I/O) as an alternative to the M12 connection.

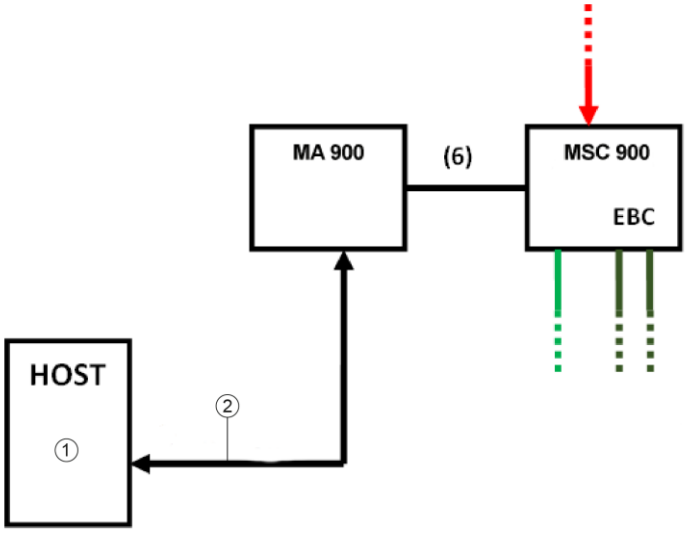

1 SERIAL
2 COM wires

(6) KB 900 - 1000 MSC

Figure 47 – Large Synchronized Network with COM to Host

5.9 CODE RECONSTRUCTION TECHNOLOGY (CRT)

The traditional way of barcode reading could be called “Linear Reading”. In this case, the laser beam crosses the barcode symbol from its beginning to its end as shown in the following figure:

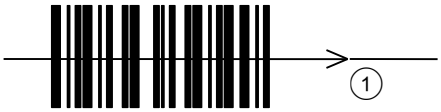

1 Laser Beam

Figure 48 – Linear Reading

In Code Reconstruction Technology mode it is no longer necessary for the laser beam to cross the label from the start to the end. With just a set of partial scans on the label (obtained using the motion of the label itself), the BCL 900i is able to “reconstruct” the barcode. A typical set of partial scans is shown in the figure below:

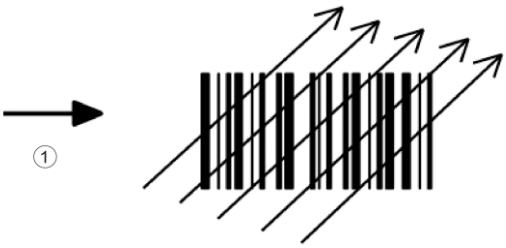

1 Code Direction

Figure 49 – Partial Scans

None of the partial scans contains the whole label. The decoder aligns each partial scan correctly and combines them in order to obtain the entire code.

The alignment is performed by calculating the time difference from one partial scan to another using a reference code element.

5.9.1 Tilt Angle for Code Reconstruction Technology

The most important parameter in Code Reconstruction Technology is the value of the maximum tilt angle (α maximum) under which the code reconstruction process is still possible.

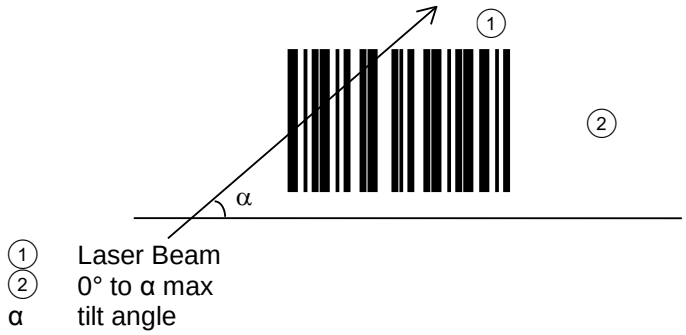

Figure 50 – Tilt Angle

The decoder will be able to read the label with a tilt angle between + α max and - α max as shown in the following figure:

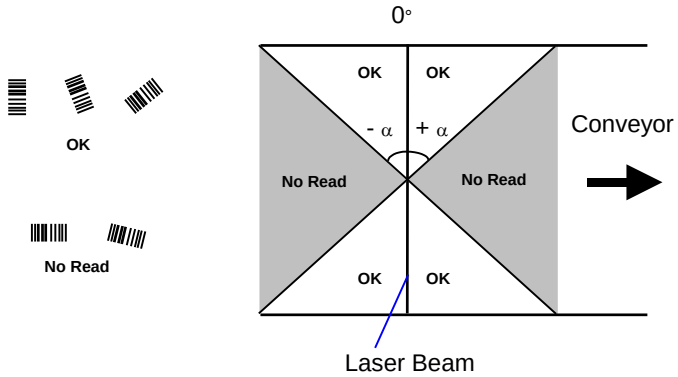

Figure 51 – Reading Zones with α Max

The formulas to calculate α maximum depend on various parameters such as: label height, number of scans per second, code motion speed, etc. Minimum label heights at different conveyor speeds are given in the tables in *section 5.9.2,* depending on standard α values of 45° and 30°.

5.9.2 Minimum Code Height For Code Reconstruction Technology

Based on the scanner read rate of 1000 scans/sec., minimum label heights at different conveyor speeds are given in the tables below.

Refer to the reading diagrams in *section 5.10* for further details on the reading features. These diagrams are taken on various resolution sample codes at a 25 °C ambient temperature depending on the conditions listed under each diagram.

- ANSI Grade B minimum
- 1000 scans/sec

The following tables describe the requirements for standard applications.

		Minimum Code Height for CRT Reading (mm)											
		45°						30°					
Conveyor Speed (m/s)		**0.5**	**1**	**1.5**	**2**	**2.5**	**3**	**0.5**	**1**	**1.5**	**2**	**2.5**	**3**
2/5 Interleaved Code Resolution (mm)	**0.25**	10	11	13	14	16	17	7	8	9	10	12	13
	0.30	12	13	14	16	17	19	8	9	10	11	12	14
	0.33	12	14	15	17	18	20	8	9	10	12	13	14
	0.38	14	15	16	18	19	21	9	10	11	12	14	15
	0.50	18	18	20	21	23	24	11	12	13	14	15	17
	0.72	24	25	26	27	28	30	15	16	16	18	19	20
	1.00	33	33	34	35	36	37	20	20	21	22	23	24

Ratio 3:1

Table 1

		Minimum Code Height for CRT Reading (mm)											
		45°						30°					
Conveyor Speed (m/s)		**0.5**	**1**	**1.5**	**2**	**2.5**	**3**	**0.5**	**1**	**1.5**	**2**	**2.5**	**3**
Code 39 Code Resolution (mm)	**0.25**	9	9	11	12	14	15	6	7	8	9	10	11
	0.30	10	11	12	13	15	16	7	7	8	10	11	12
	0.33	11	11	12	14	15	17	7	8	9	10	11	12
	0.38	12	13	13	15	16	18	8	8	9	10	12	13
	0.50	15	16	16	17	18	20	9	10	11	12	13	14
	0.72	20	21	22	22	23	24	13	13	14	14	15	16
	1.00	27	28	29	29	30	31	17	17	18	18	19	20

Ratio 3:1; Interdigit = Module Size

Table 2

		Minimum Code Height for CRT Reading (mm)											
		45°						30°					
Conveyor Speed (m/s)		0.5	1	1.5	2	2.5	3	0.5	1	1.5	2	2.5	3
Code 128 – GS1-128 Code Resolution (mm)	0.25	7	9	10	12	13	15	6	6	8	9	10	11
	0.30	8	9	11	12	14	15	6	7	8	9	10	12
	0.33	9	10	11	13	14	16	6	7	8	9	11	12
	0.38	10	11	12	14	15	17	6	8	9	10	11	12
	0.50	12	13	14	16	17	19	8	9	10	11	12	13
	0.72	16	17	18	19	21	22	10	11	12	13	14	15
	1.00	21	22	23	24	25	26	13	14	15	16	17	18

Table 3

		Minimum Code Height for CRT Reading (mm)											
		45°						30°					
Conveyor Speed (m/s)		0.5	1	1.5	2	2.5	3	0.5	1	1.5	2	2.5	3
Codabar Code Resolution (mm)	0.25	8	9	10	12	13	15	5	6	8	9	10	11
	0.30	9	9	11	12	14	15	6	7	8	9	10	12
	0.33	9	10	11	13	14	16	6	7	8	9	11	12
	0.38	10	11	12	14	15	17	7	8	9	10	11	12
	0.50	13	13	14	16	17	19	8	9	10	11	12	13
	0.72	17	18	18	19	21	22	11	11	12	13	14	15
	1.00	23	23	24	25	26	26	14	15	15	16	17	18

Ratio 3:1; Interdigit = Module Size

Table 4

		Minimum Code Height for CRT Reading (mm)											
		45°						30°					
Conveyor Speed (m/s)		0.5	1	1.5	2	2.5	3	0.5	1	1.5	2	2.5	3
EAN 8-13, UPC-A Code Resolution (mm)	0.25	7	8	9	11	12	14	5	6	7	8	9	11
	0.30	8	9	10	11	13	14	6	6	7	9	10	11
	0.33	9	10	10	12	13	15	6	7	8	9	10	11
	0.38	10	11	11	12	14	15	6	7	8	9	10	12
	0.50	12	13	14	14	15	17	8	8	9	10	11	12
	0.72	16	17	18	18	19	20	10	11	11	12	13	14
	1.00	21	22	23	24	24	25	13	14	15	15	16	16

Table 5

5.10 READING DIAGRAM

How to identify the scanner model:

The model type is shown on the serial label.

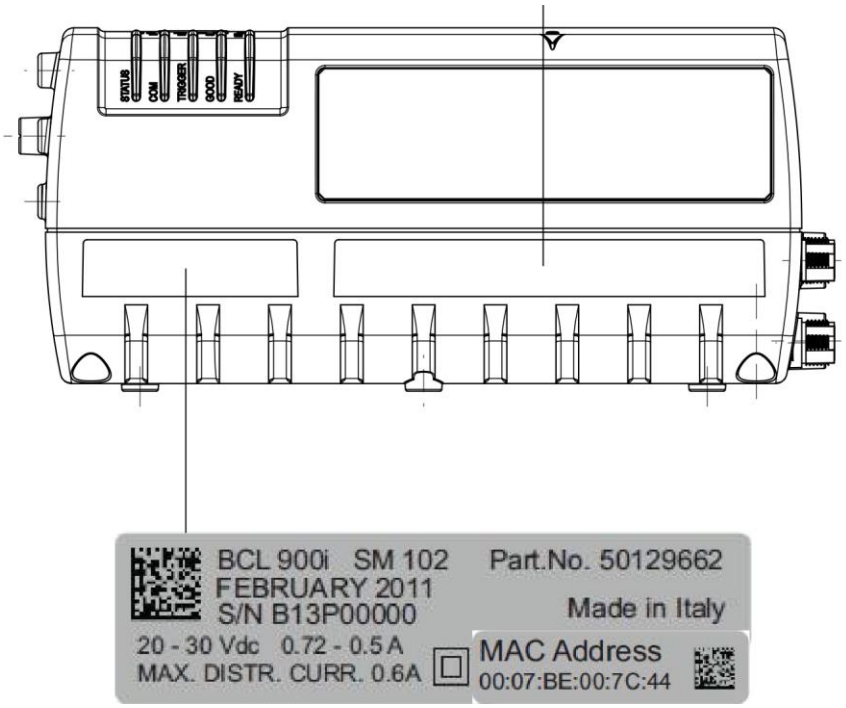

Figure 52 – Identifying the scanner model

- BCL 900i SN 102 is **High Density Resolution**
- BCL 900i SM 102 is **Medium Density Resolution**

BCL 900i SM 102

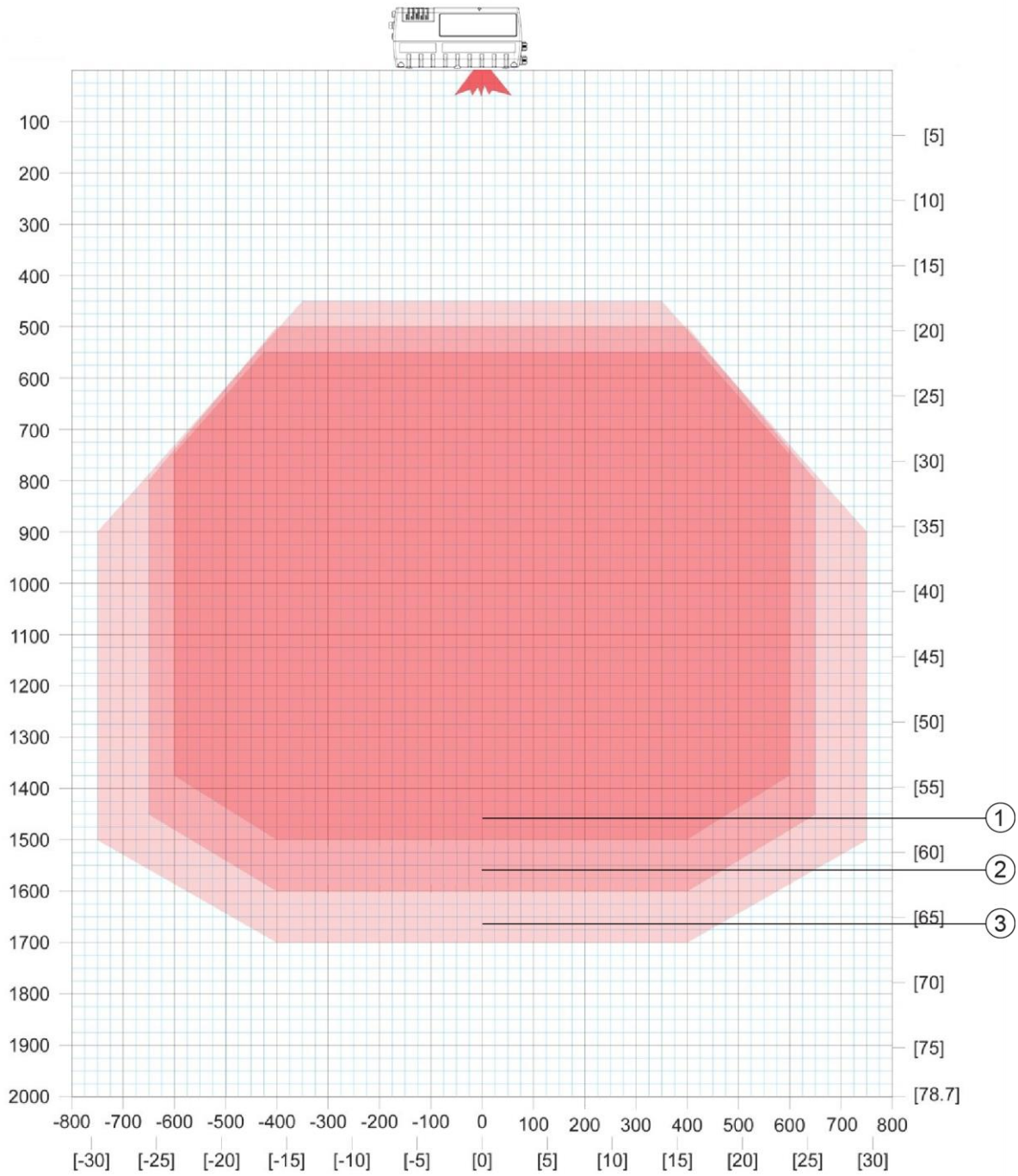

1,000 scans per second (standard) throughout DOF
ANSI Contrast Grade 84 % or greater
ANSI “Grade A” Print Quality

Pitch not greater than +/- 15°
Skew not greater than +/- 15°
Tilt not greater than +/- 45°

1. BCL 900i SM 102 0.33 mm/13 mil
2. BCL 900i SM 102 0.38 mm/15 mil
3. BCL 900i SM 102 0.50 mm/20 mil

Figure 53 – Reading Diagram, BCL 900i SM 102 Combined

BCL 900i SM 102 0.33 mm/13 mil

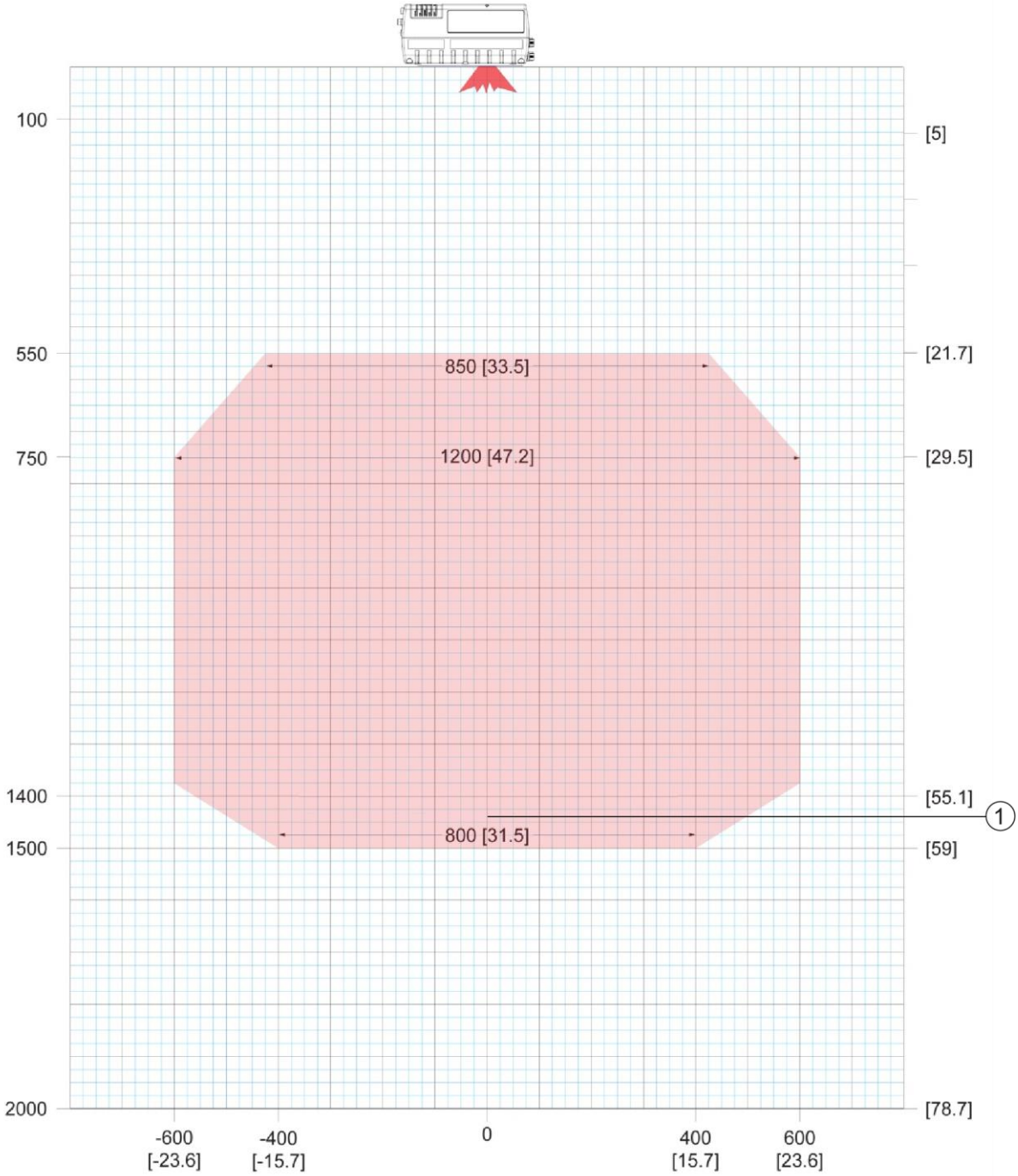

1,000 scans per second (standard) throughout DOF
ANSI Contrast Grade 84 % or greater
ANSI “Grade A” Print Quality

Pitch not greater than +/- 15°
Skew not greater than +/- 15°
Tilt not greater than +/- 45°

(1) BCL 900i SM 102 0.33 mm/13 mil

Figure 54 – Reading Diagram, BCL 900i SM 102 0.33 mm/13 mil

BCL 900i SM 102 0.38 mm/15 mil

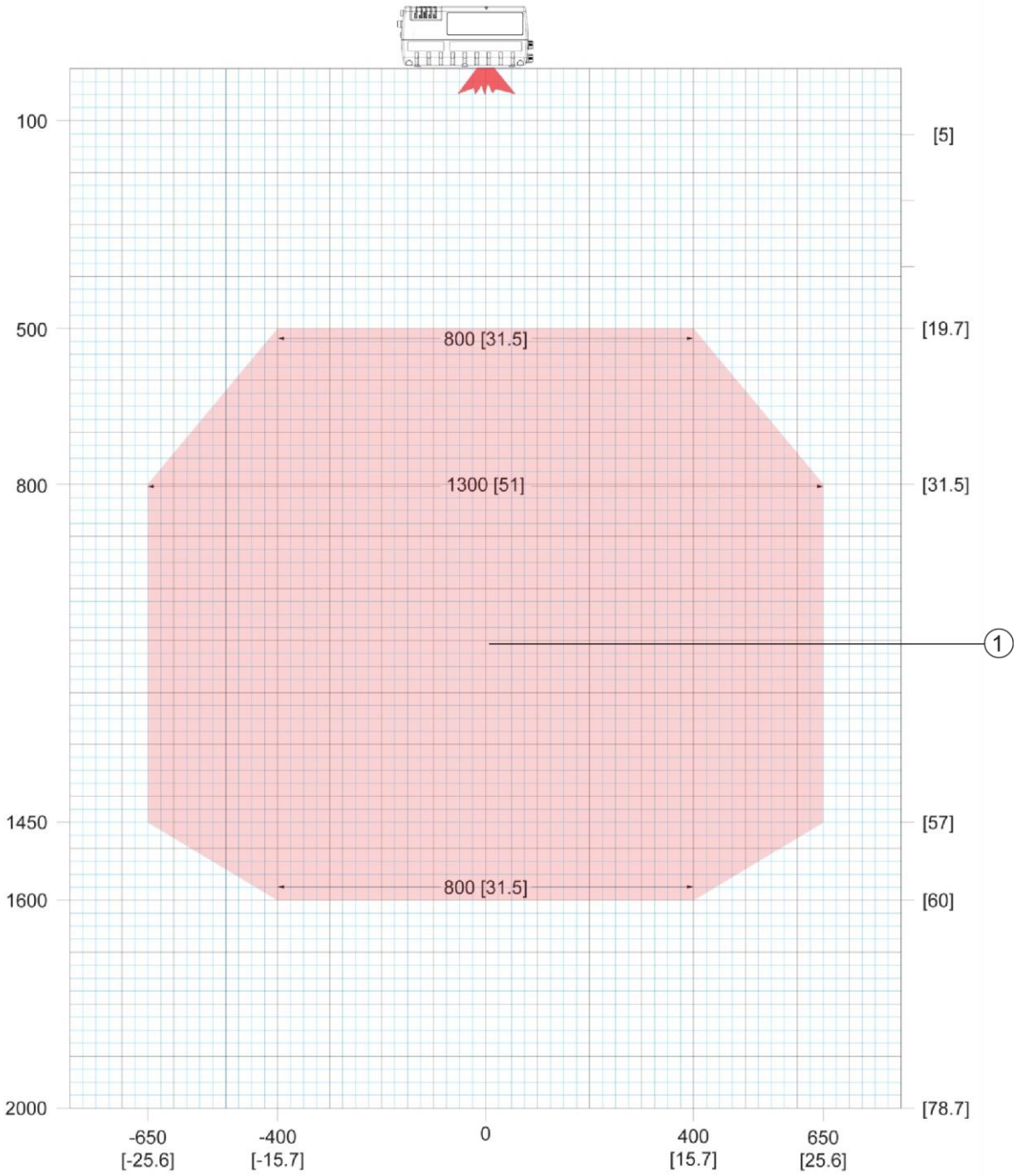

1,000 scans per second (standard) throughout DOF
ANSI Contrast Grade 84 % or greater
ANSI “Grade A” Print Quality

Pitch not greater than +/- 15°
Skew not greater than +/- 15°
Tilt not greater than +/- 45°

1 BCL 900i SM 102 0.38 mm/15 mil

Figure 55 – Read Chart: BCL 900i SM 102 0.38 mm/15 mil

BCL 900i SM 102 0.50 mm/20 mil

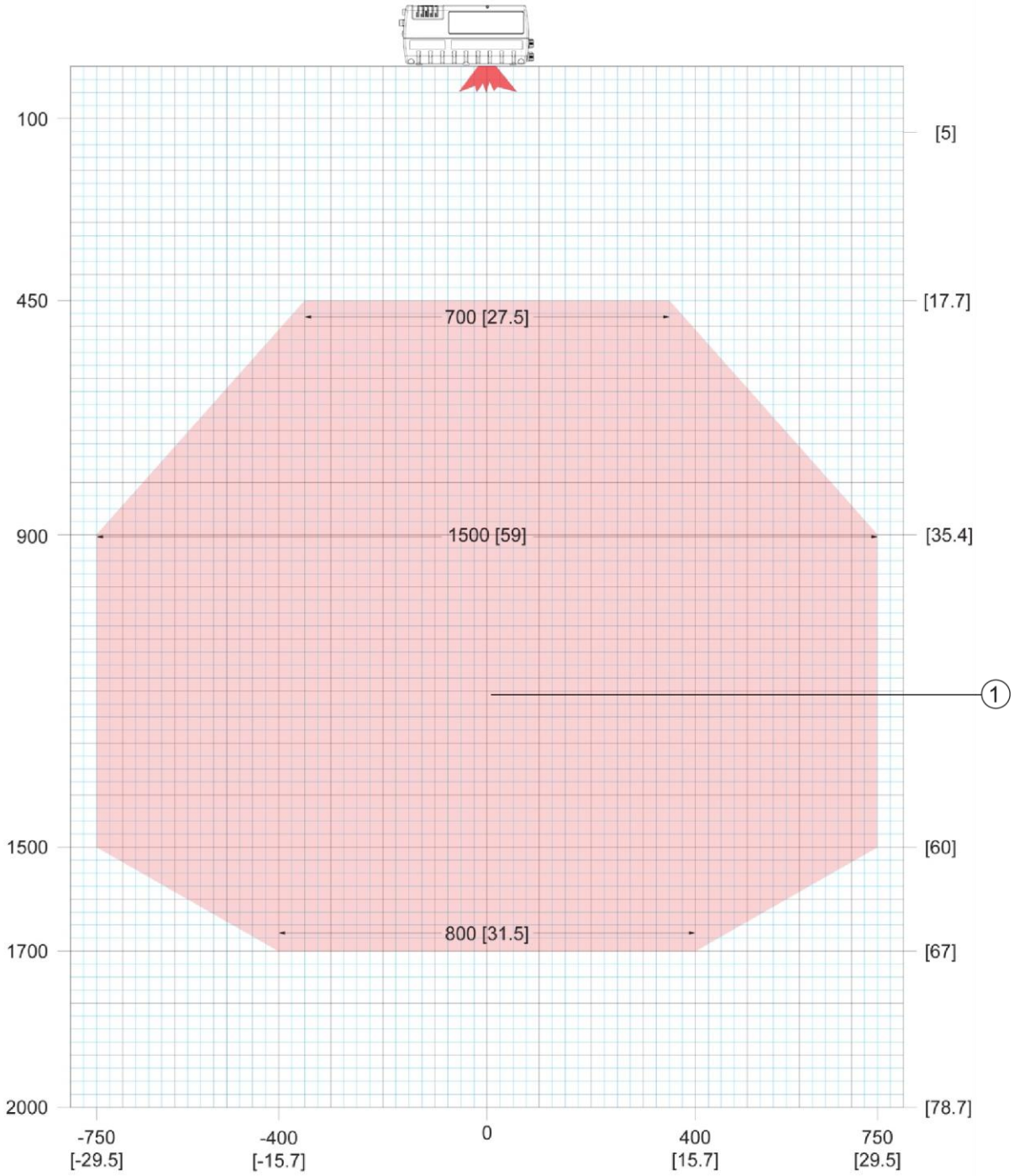

1,000 scans per second (standard) throughout DOF
ANSI Contrast Grade 84 % or greater
ANSI “Grade A” Print Quality

Pitch not greater than +/- 15°
Skew not greater than +/- 15°
Tilt not greater than +/- 45°

① BCL 900i SM 102 0.50 mm/20 mil

Figure 56 – Read Chart: BCL 900i SM 102 0.50 mm/20 mil

BCL 900i SN 102

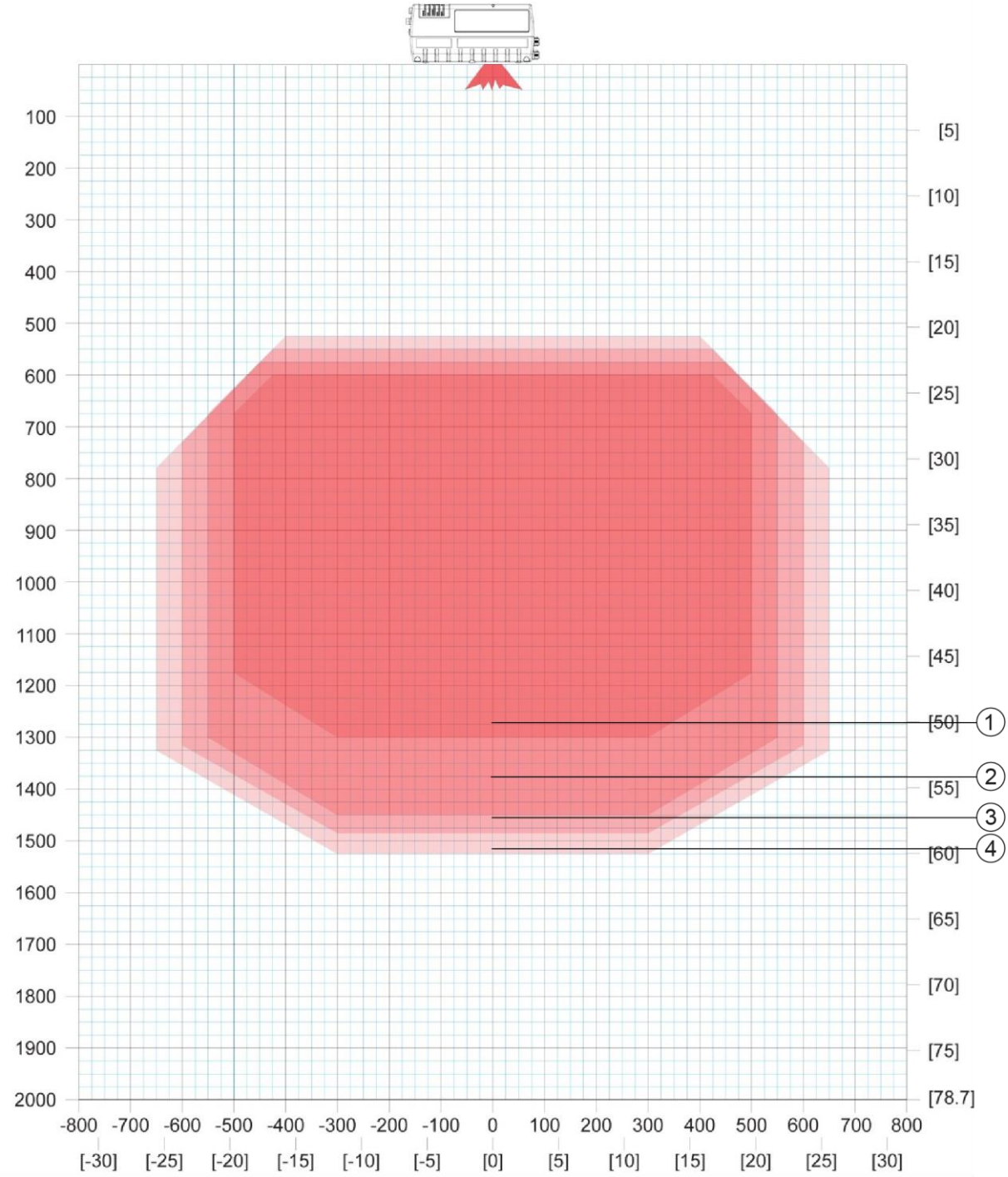

1,000 scans per second (standard) throughout DOF
ANSI Contrast Grade 84 % or greater
ANSI “Grade A” Print Quality

Pitch not greater than +/- 15°
Skew not greater than +/- 15°
Tilt not greater than +/- 45°

1. BCL 900i SN 102 0.25 mm/10 mil
2. BCL 900i SN 102 0.30 mm/12 mil
3. BCL 900i SN 102 0.33 mm/13 mil
4. BCL 900i SN 102 0.38 mm/15 mil

Figure 57 – Reading Diagram, BCL 900i SN 102 Combined

BCL 900i SN 102 0.25 mm/10 mil

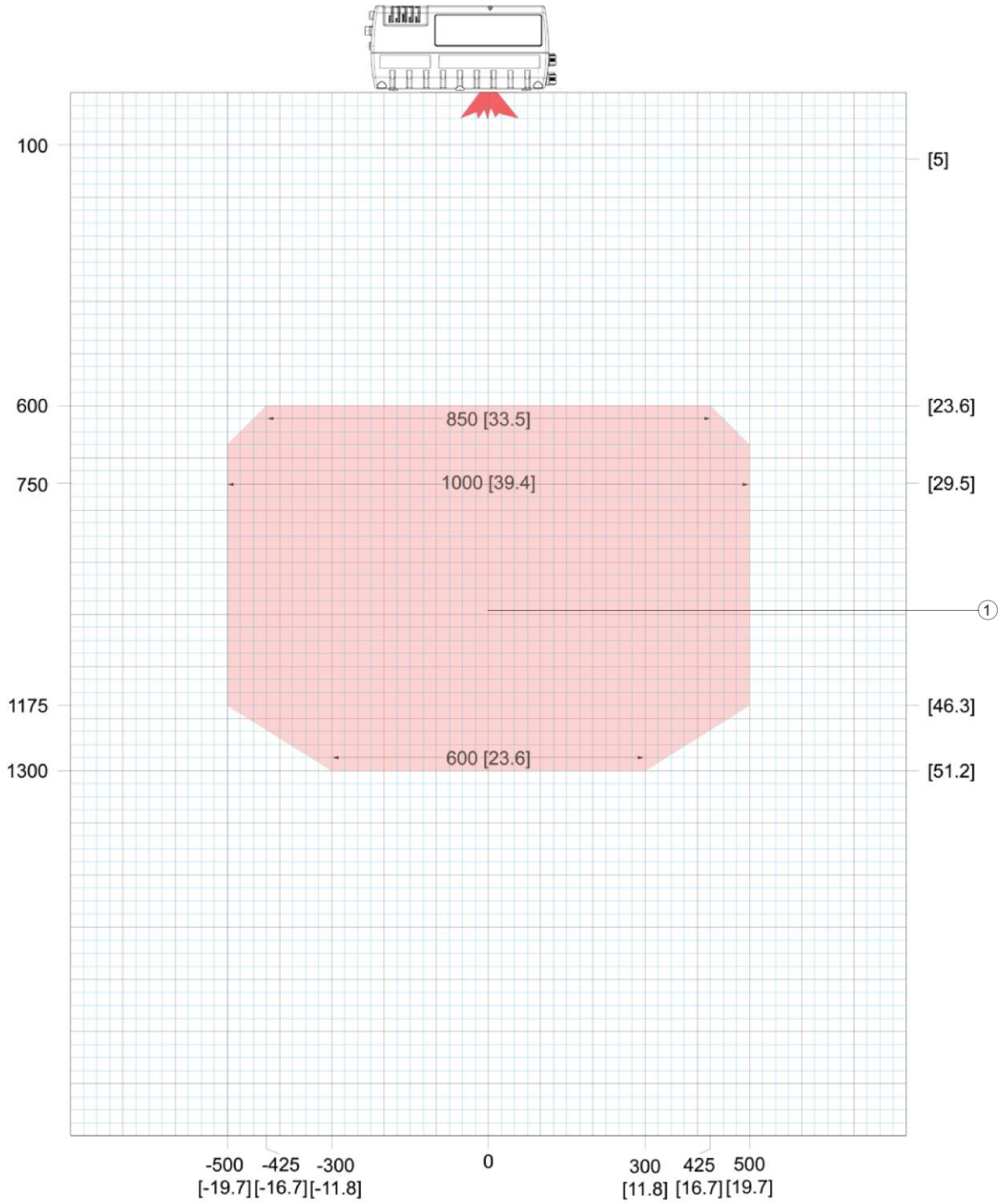

1,000 scans per second (standard) throughout DOF
ANSI Contrast Grade 84 % or greater
ANSI “Grade A” Print Quality

Pitch not greater than +/- 15°
Skew not greater than +/- 15°
Tilt not greater than +/- 45°

① BCL 900i SN 102 0.25 mm/10 mil

Figure 58 – Reading Diagram, BCL 900i SN 102 0.25 mm/10 mil

BCL 900i SN 102 0.30 mm/12 mil

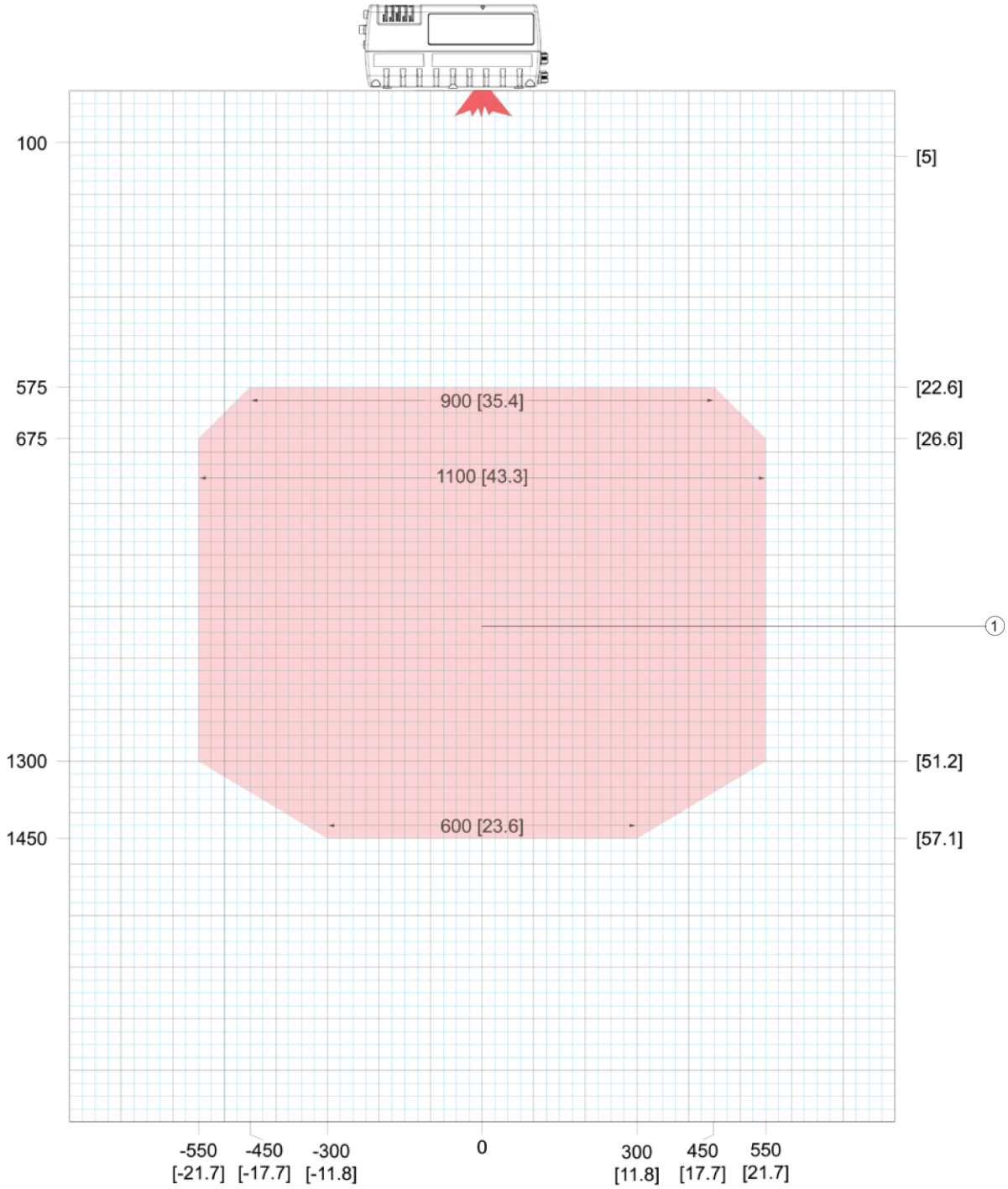

1,000 scans per second (standard) throughout DOF
ANSI Contrast Grade 84 % or greater
ANSI “Grade A” Print Quality

Pitch not greater than +/- 15°
Skew not greater than +/- 15°
Tilt not greater than +/- 45°

① BCL 900i SN 102 0.30 mm/12 mil

Figure 59 – Reading Diagram, BCL 900i SN 102 0.30 mm/12 mil

BCL 900i SN 102 0.33 mm/13 mil

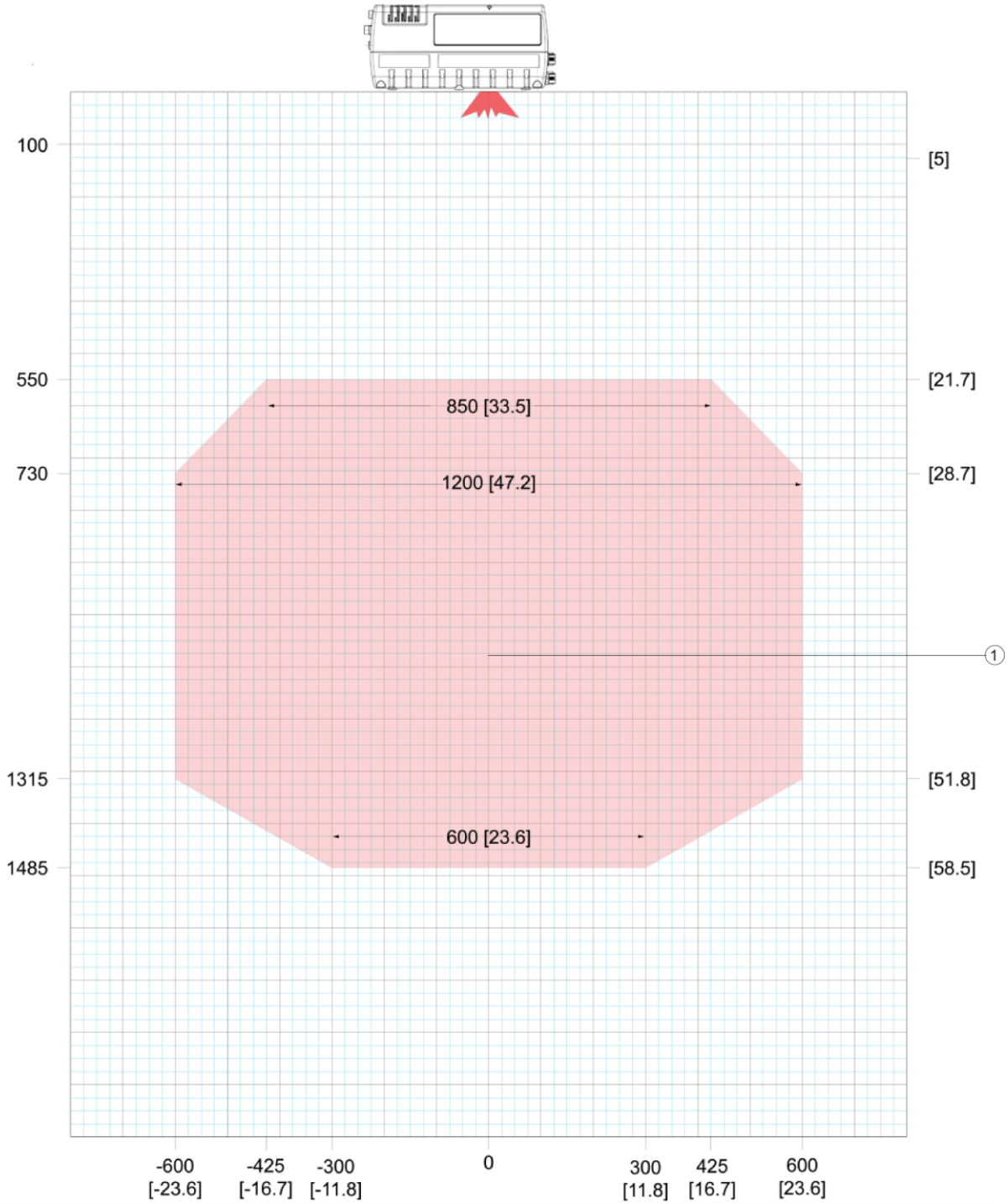

1,000 scans per second (standard) throughout DOF
ANSI Contrast Grade 84 % or greater
ANSI “Grade A” Print Quality

Pitch not greater than +/- 15°
Skew not greater than +/- 15°
Tilt not greater than +/- 45°

① BCL 900i SN 102 0.33 mm/13 mil

Figure 60 – Reading Diagram, BCL 900i SN 102 0.33 mm/13 mil

BCL 900i SN 102 0.38 mm/15 mil

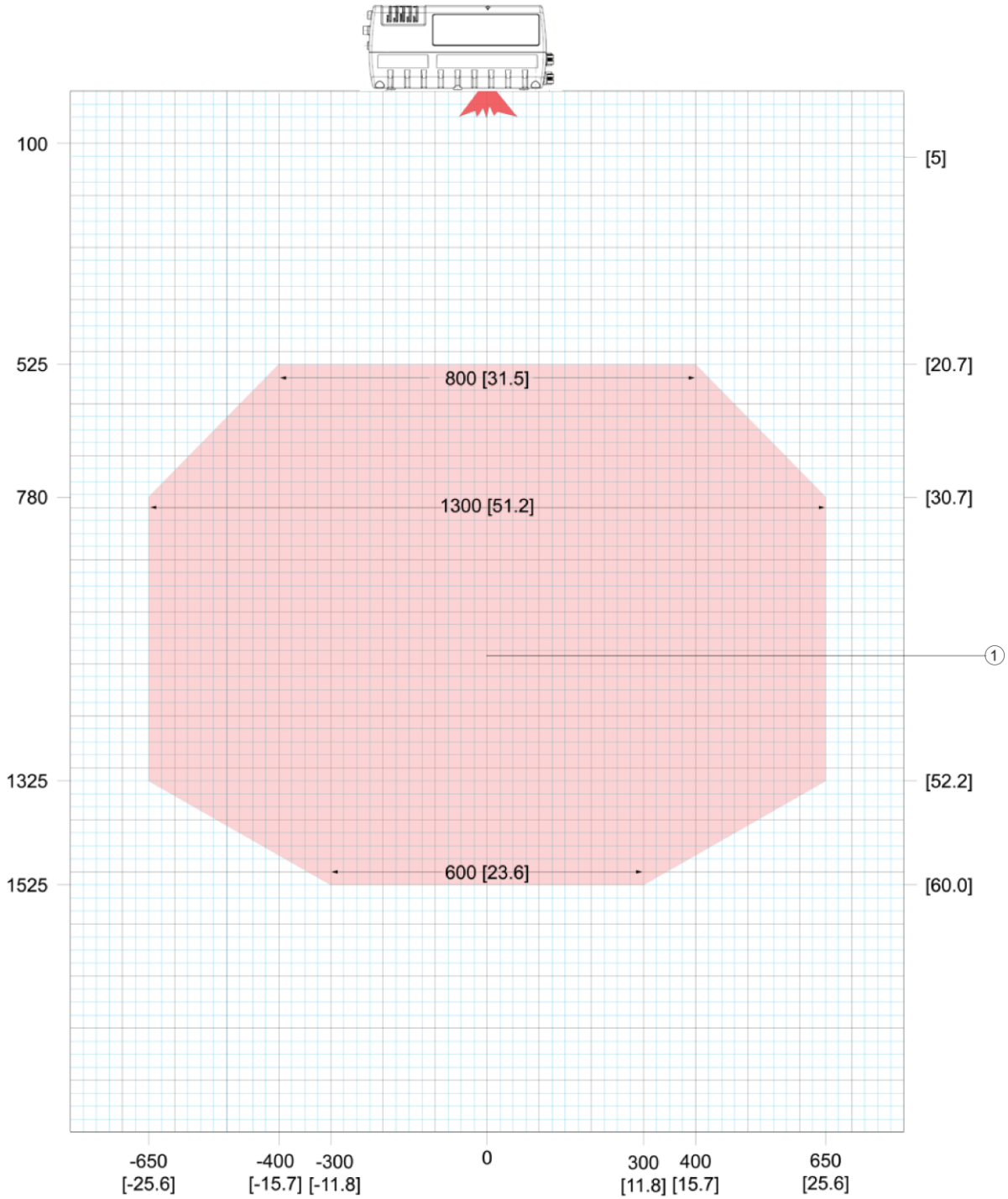

1,000 scans per second (standard) throughout DOF
ANSI Contrast Grade 84 % or greater
ANSI “Grade A” Print Quality

Pitch not greater than +/- 15°
Skew not greater than +/- 15°
Tilt not greater than +/- 45°

① BCL 900i SN 102 0.38 mm/15 mil

Figure 61 – Reading Diagram, BCL 900i SN 102 0.38 mm/15 mil

6 MAINTENANCE

6.1 OVERVIEW

This chapter provides instructions for maintaining optimum performance and life for your BCL 900i barcode scanners. It provides specific information on:

- Maintenance Procedures
- Exterior Cleaning
- Mounting Hardware Checks
- Wiring Connection Checks

Item	Description
Soft-bristle brush	For cleaning the unit's exterior
Clean, soft cloths	For cleaning the unit's exterior
Cleaning solutions	Mild detergent solution for cleaning the unit's exterior.
	70% denatured alcohol, 30% de-ionized water solution for cleaning exit window
Soft cotton swabs or lint-free cloth	Use to clean barcode scanner's exit window

IMPORTANT: Due to the complex and application-specific nature of these installations, the barcode scanner must be setup and serviced by authorized technicians trained by Leuze electronic.

THE MAINTENANCE PROCEDURES IN THIS CHAPTER MAY BE PERFORMED BY AN END USER TECHNICIAN. TRAINING IS RECOMMENDED **IF THE END USER INTENDS TO DO MORE THAN THE MAINTENANCE PROCEDURES PROVIDED IN THIS CHAPTER.**

THERE ARE NO USER SERVICEABLE PARTS WITHIN THE BARCODE SCANNER.

DO NOT OPEN THE UNIT. **OPENING THE** barcode scanner **MAY VOID ITS WARRANTY.**

CAUTION: **PROCEEDING WITH ANY SETUP, CALIBRATION, OR SERVICE PROCEDURES WITHOUT PROPER TRAINING MAY VOID THE WARRANTY.**

FOR FURTHER INFORMATION ON TRAINING, CONTACT US THROUGH OUR WEBSITE AT www.leuze.de**.**

6.2 MAINTENANCE TASKS

Perform the maintenance tasks on an “as needed” basis to assure proper operation of the barcode scanner. Task schedule frequency depends upon the application environment conditions. It only requires a few minutes to complete each maintenance task.

Exterior Cleaning

WARNING: Shut down the scanner before performing this maintenance task. Do not stare into the scanner’s exit window at the laser light. Avoid direct eye exposure. The laser light level does not constitute a health hazard, however staring at the laser light for prolonged periods could result in eye damage.

CAUTION: Do not use any chemical on the scanner that is unsafe for plastics, such as benzene, acetone, or similar products. Before performing this maintenance task, be sure to shutdown the unit.

The exterior cleaning procedure may be performed without removing the reader from the mounting structure.

1. Turn off the barcode scanner by disconnecting the power source.
2. Clean the exterior (except the exit window) with a clean, soft-bristle brush. Be sure not to brush any dust, dirt, or debris onto the exit window.
3. Carefully remove any debris in or around the exit window.
4. Wipe the exterior (except the exit window) with a clean, soft cloth dampened slightly with a mild detergent solution.
5. The exit window should be cleaned after this task is completed.

6.2.1 Cleaning the Exit Window

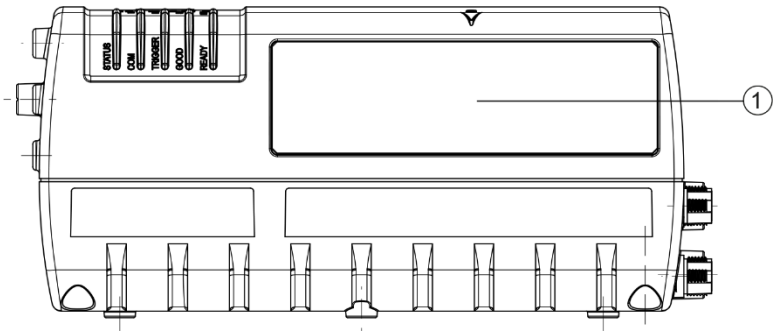

① Exit window

Figure 62: Exit window locations

WARNING: Shut down the scanner before performing this maintenance task. Do not stare into the scanner's exit window at the laser light. Avoid direct eye exposure. The laser light level does not constitute a health hazard, however staring at the laser light for prolonged periods could result in eye damage.

CAUTION: Never apply cleaning solution directly to the exit window. Always apply the solution to a cloth, and then the cloth to the window. Do not use any chemical on the barcode scanner that is unsafe for plastics, such as benzene, acetone, or similar products.

The exit window cleaning procedure may be performed without removing the reader from the mounting structure if it is possible to do so.

1. Turn off the scanner by disconnecting the power source.
2. Follow the exterior cleaning procedure before cleaning the exit window
3. Check the exit window surface for any dust, dirt, or smudges. If the window needs to be cleaned, proceed to Step 4.
4. Make a solution of seven parts denatured alcohol and three parts water.
5. Apply the cleaning solution to a cotton swab or lint-free cloth.
6. Apply the cleaning solution to the exit window.
7. Remove any streaks or remaining moisture from the exit window with a dry, soft, lint-free cloth or lens paper.
8. Verify scanner operation.

6.2.2 Cleaning the Photoelectric Sensor

If your application uses the photoelectric sensor option as a hardware trigger, be sure to clean the photoelectric sensor periodically as outlined below.

1. Turn off the product transport.
2. Turn off the scanner by disconnecting the power source.
3. Clean the photoelectric sensor's lens using the denatured alcohol solution and a cotton swab or lens paper.
4. Clean the reflector using the denatured alcohol solution and a cotton swab or lens paper.
5. Verify photoelectric sensor operation.

6.2.3 Cleaning the Tachometer

If your application uses the tachometer option for tracking purposes, be sure to clean the tachometer wheels periodically as outlined below.

1. Turn off the product transport.
2. Turn off the scanner by disconnecting the power source.
3. Using a clean, soft cloth, wipe the wheels of the tachometer clean using a mild detergent solution.
4. Before restarting the system, be sure the tachometer is making good contact with the product transport.
5. Verify tachometer operation.

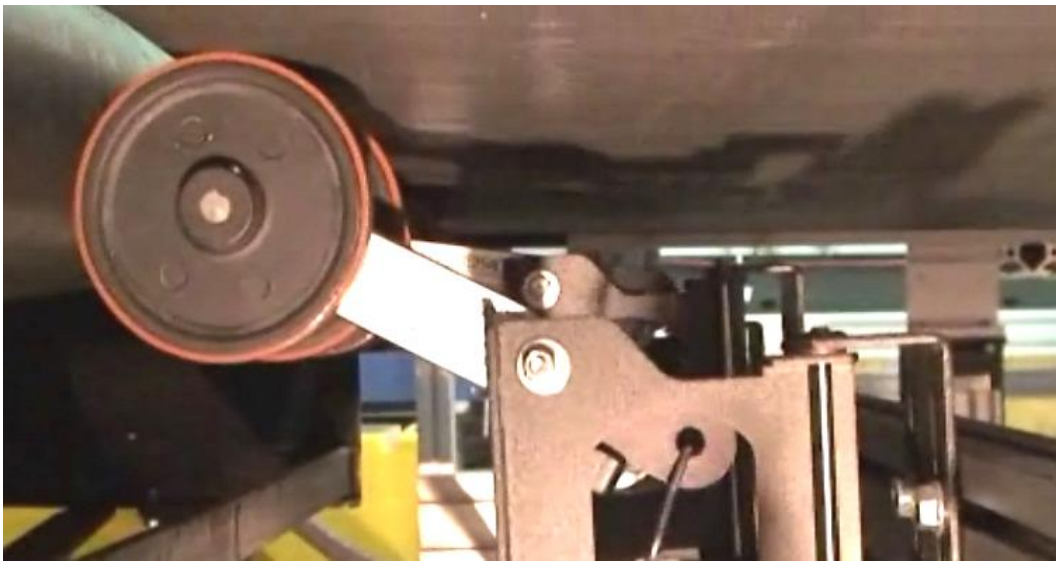

Figure 63: Tachometer Wheel

6.2.4 Tighten Mounting Hardware

1. Check all barcode scanner, MA Connection Box (if applicable), MSC 900 Controller (if applicable), and power supply mounting hardware as applicable. Tighten as necessary. Do not over-tighten. Be sure not to disturb the equipment's alignment as it relates to the product transport.

2. Check the mounting hardware of the Photoelectric Sensor (if this option is being used). Tighten as necessary. Do not over-tighten.

3. Check the mounting hardware of the tachometer (if this option is being used). Tighten as necessary. Do not over-tighten.

6.2.5 Checking Barcode Scanning System Connections

Wiring connections to the barcode scanners are made between the connector panel and MA Connection Box and/or MSC 900 Controller.
(See Chapter 3, Electrical Installation.)

1. Check all wiring connections to the connector panel. Tighten any loose connections as necessary. Do not over-tighten.

2. Check all wiring connections to the MA Connection Box and/or MSC 900 Controller. Tighten any loose connections as necessary. Do not over-tighten.

3. Check all cabling/conduit for signs of wear/damage. Repair/replace any damaged cable connections as necessary.

6.2.6 Verify Barcode Scanner Operation

If after performing maintenance, the barcode scanning system continues to perform below the normal operations experienced with the system under normal daily conditions, contact Leuze electronic through our website at www.leuze.de.

6.2.7 Verify Photoelectric Sensor Operation

1. Block the Photoelectric Sensor emitter beam to confirm it is aligned properly with the reflector.

2. Verify that the TRIGGER LED on barcode scanner lights YELLOW when photoelectric sensor beam is blocked.

   If the photoelectric sensor's LED does not change status, adjust the photoelectric sensor so that it is properly aligned with the reflector.

   If the TRIGGER LED on the barcode scanner is not green when the photoelectric sensor's beam is blocked, check the cabling between the photoelectric sensor and MA 900 or MSC 900 for damage.

6.2.8 Verify Tachometer Operation

Rotate the tachometer wheel slowly.

The **ENC/TACH** LED in the MA 900 or the **TACH** LED on the MSC 900 should flash indicating the tachometer is operational. Also, you can view the belt speed by navigating to **Diagnostics | Monitor** in the User Interface *(see section 4.7.1).*

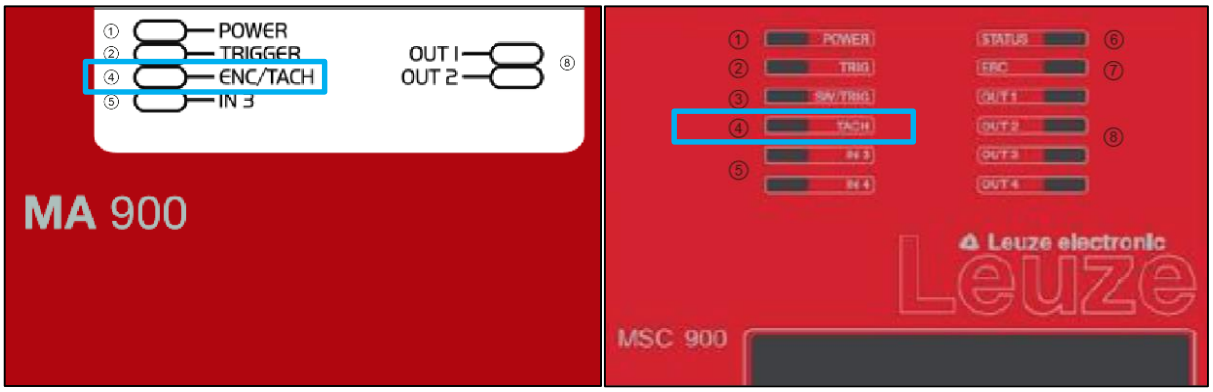

1. POWER
2. TRIGGER/TRIG
3. SW/TRIG
4. ENC/TACH
5. IN 3 - IN 4
6. STATUS
7. EBC
8. OUT1 – OUT 4

Figure 64: ENC/TACH LED indicators in MA 900 and MSC 900

If these indicators do not register feedback when the tachometer wheel is rotated, check the cabling between the tachometer and the MA 900 for damage.

7 TROUBLESHOOTING

IMPORTANT: Due to the complex and application-specific nature of these installations, operational deficiencies of the barcode scanner must be diagnosed and serviced by a trained and authorized Leuze electronic technician.

There are no user serviceable components or field replaceable units (FRUs) inside the barcode scanner.

For further information on training, contact us through the Leuze electronic website at www.leuze.de.

NOTE: When contacting Leuze electronic for help with a scanner, please be ready to share the unit serial number with the Leuze electronic technician. The unit's serial number tag is located on the device, where shown below. Help desk contact information is available at www.leuze.de

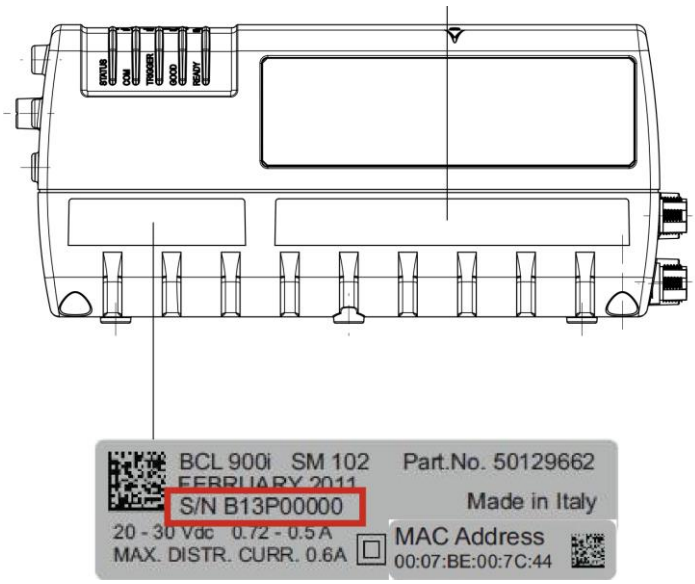

Figure 65: Serial tag location

7.1 ERROR CODES AND RESOLUTIONS

Error Code	Description	Severity	Explanation	Symptom	Troubleshooting	Action required
1	Node not responding	Error	In a Master/Slave configuration, the Master monitors the status of the Slaves in its network. If a slave unit fails to be identified, the Master will post this message.	- The scanning tunnel's no-read rate increases. - More than one slave unit may be shown as not responding.	- In a tunnel configuration, the cabling that connects the system into to a network must be intact or a scanner will be reported as not responding. - Make sure all the slave units are powered on.	- Make sure cables are connected. - Check scanners power source. - Replace scanner.
80	Node Reset	Error	In a Master/Slave configuration, the Master monitors the status of the Slaves in its network. If a Slave resets, it sends a reset message to the Master. The Master then posts this error condition on the diagnostic screen.	- The scanning tunnel's no-read rate may increase during the Slave scanner's reconnection.	- This condition is related to a slave scanner. Make sure the power source of the slave is not faulty.	- If condition persists, replace the scanner.
81	Motor Failure	Error	The scanner's mirror wheel motor has failed.	- The scanner will be powered up but will not emit laser light from its exit window. - The scanners motor will not be spinning.	- Hold your hand in front of the scanner to determine if the laser is on.	This is an internal failure and is not field serviceable - Replace scanner.
83	Laser Failure	Error	Scanner has a laser failure.	- There is no laser light emitted from the scanner - The mirror wheel motor may still be spinning, however, the motor speed may be out of range at which time the scanner will turn off the laser light.	- Hold your hand in front of the scanner to determine if the laser is on.	This is an internal failure and is not field serviceable. - Replace scanner.

Error Code	Description	Severity	Explanation	Symptom	Troubleshooting	Action required
130	Encoder Timeout	Warning	No encoder (tachometer) is detected in specified time. The Encoder signal provides the scanner with belt speed and other tracking information. This error will only occur when the scanner is in the PackTrack mode.	- The scanner may experience an increase in no-reads. - The scanner may start missing the transmit point.	- Confirm that the belt is running. - Make sure the encoder (tachometer) wheel is making a firm contact with the conveyor. - Check the **Global Settings | Diagnostics | Encoder Timeout** setting to confirm that it is not set too low *(See section 4.5.8).*	- Adjust the encoder (tachometer) mounting. - Adjust the **Encoder Timeout** setting *(See section 4.5.8).*
131	Input 1 Failure	Error	The Primary PS (photoelectric sensor) Input is stuck in the active state (PackTrack Mode).	- The scanner will not go into trigger. - No data will be transmitted to the Host.	- Check the alignment of the photoelectric sensor. - Check the functionality of the photoelectric sensor.	- Realign the photoelectric sensor. - Replace the photoelectric sensor.
132	No Phase Error	Error	No Phase "timeout" is exceeded (On-Line and PackTrack Mode). - Trigger must be identified within a specified time.			
133	Input 2 Failure	Error	Secondary PS (photoelectric sensor) Input Failure Stuck Active (PackTrack Mode).	- The scanner will not go into trigger. - No data will be transmitted to the Host.	- Check the alignment of the photoelectric sensor. - Check the functionality of the photoelectric sensor.	- Realign the photoelectric sensor. - Replace the photoelectric sensor.

Error Code	Description	Severity	Explanation	Symptom	Troubleshooting	Action required
135	Encoder Failure	Error	Phase input (trigger source) is activated while encoder (tachometer) is stopped (PackTrack Mode).	- No data will be transmitted to the host. - Scanner(s) will not read any barcodes. - System receives trigger cycle when no encoder signal is present.	- Check D**iagnostics | Monitor** to see if the scanner is reporting a conveyor speed *(See section 4.7.1).* - Make sure the encoder (tachometer) wheel is making a firm contact with the conveyor.	- Adjust, realign, or replace the encoder (tachometer).
157	SD Card Failure	Error	MSC 900 - SD card cannot be accessed. The SD card contains the backup files. It also contains a copy of the scanners application software. This failure is only in the MSC 900.	- Unit will not backup or restore the parameters.	Try to save the parameters from the **MSC 900** to the SD card *(see MSC 900 System Controller Reference Manual).*	- Confirm that the SD card is seated properly in the MSC 900. - Replace SD card *(see MSC 900 System Controller Reference Manual)*.
169	Main Serial Port Error	Error	Protocol Index message not received on Main Serial Port.			
176	Aux Serial Port Error	Error	Protocol Index message not received on Aux Serial Port.			
178	Ethernet Socket 1 Error	Error	Protocol Index message not received on User Socket 1.			
179	Ethernet Socket 2 Error	Error	Protocol Index message not received on User Socket 2.			
180	Ethernet Socket 3 Error	Error	Protocol Index message not received on User Socket 3.			
181	Ethernet Socket 4 Error	Error	Protocol Index message not received on User Socket 4.			

Error Code	Description	Severity	Explanation	Symptom	Troubleshooting	Action required
182	Ethernet Socket 5 Error	Error	Protocol Index message not received on User Socket 5.			
183	Ethernet Socket 6 Error	Error	Protocol Index message not received on User Socket 6.			
191	Fieldbus Mismatch	Error	Fieldbus module type does not match specified model. - Module selection incorrect compared to the actual module installed.			
193	Fieldbus Config Error	Error	Error configuring fieldbus module.	- Unable to communicate to the module.	- Confirm that the unit is not communicating to the host. - Confirm that the fieldbus parameters are configured properly *(see section 4.5.7)*.	- Replace fieldbus module.
195	Fieldbus DHCP Error	Error	Profinet module had a DHCP error.	- Unable to acquire an IP address.	- Confirm that the unit is not communicating to the host. - Confirm that the fieldbus parameters are configured properly *(see section 4.5.7)*.	- Replace fieldbus module.
205	APD Temperature Error	Error	APD Temperature sensor is not working. A fluctuation in the scanner's temperature can have an adverse effect on several internal functions of the scanner. The scanner monitors the temperature, and if it is erratic, this error is posted.	- The scanner may experience an increase in no-reads. - The scanner may start missing the transmit point.	1. Cycle power on the scanner; 2. Wait until the unit has time to cool down. 3. Restart the scanner and monitor it to determine whether the error reoccurs.	This is an internal failure and is not field serviceable. - Replace scanner.

Error Code	Description	Severity	Explanation	Symptom	Troubleshooting	Action required
207	In Beam Sensor Error	Error	The scanner has an in-the-beam sensor, which provides timing for the decoding of barcodes. The scanner monitors this signal, and posts this error if the signal is sporadic or missing.	- The scanner stops reading barcodes.	- Put the scanner in the test mode to test its ability to read the barcode *(see section 4.7.2)*.	This is an internal failure and is not field serviceable. - Replace scanner.
211	PTP Error	Error	Cannot synchronize the internal clock using the PTP (precision time protocol) protocol. This clock sync pulse is generated by the controller unit. It is used to sync the read data of all the scanners in the network with the master unit.	LEDs flashing.	- Confirm that all the scanners are connected in the chain. - Use the scanner test mode to confirm that the scanner can statically reading a barcode *(see section 4.7.2)*. - Position a barcode on a box so it faces the questionable scanner, and dynamically test the scanner.	- Replace faulty scanner.
219	Fieldbus Comm Error	Error	Cannot communicate with the fieldbus module.	- The host loses communication with the scanner.	- Confirm that the unit is not communicating with the Host. - Confirm that the fieldbus parameters are configured properly *(see section 4.5.7)*.	- Replace fieldbus module.

Error Code	Description	Severity	Explanation	Symptom	Troubleshooting	Action required
220	Network Ring Open	Error	When the MSC 900 is used, the scanner internal network is connected in a chain configuration. If the MSC 900 detects that network chain is not complete, it will post this error.	- The system experiences a higher no-read rate. - One or more scanners may not appear on the System Info page *(see section 4.4).*	- Confirm that all the scanners are connected in the chain. - Use the scanner test mode to confirm that the scanner can statically reading a barcode *(see section 4.7.2)***.** - Position a barcode on a box so it faces the questionable scanner, and dynamically test the scanner.	- Replace faulty scanner.

8 TECHNICAL FEATURES

This chapter provides detailed specifications for the BCL 900i Barcode Scanning Systems. It provides specific information on:

- Electrical Features
- Optical Features
- Reading Features
- Human Machine Interface
- Software Features
- Environmental Features
- Physical Features

8.1 TECHNICAL SPECIFICATIONS

ELECTRICAL FEATURES		
Supply Voltage	**20-30VDC**	
Power Consumption	0.72-0.5A (note: 1.3A max peak at motor start-up) 20 W typical	
Common Communication Interfaces	Main	Baud Rate
	RS232/RS422 up to 115.2 Kbit/s	1200 to 115200
	Auxiliary	
	RS232 up to 115.2 Kbit/s	1200 to 115200
	Ethernet	2 x Ethernet TCP/IP
Digital Inputs	3 x Inputs (2 + 1 x “Encoder”), optocoupled, NPN/PNP	
Digital Outputs	2 x Outputs SW programmable, optocoupled, event driven, NPN	
Internal Communication System	EBC Technology	
Embedded Fieldbus	Ethernet TCP/IP and UDP, Ethernet/IP, Profibus and PROFINET are supported	

OPTICAL FEATURES	
Wavelength	630 to 680 nm
Safety Class	Class 2 - EN60825-1; Class II – CDRH
Light Source	Visible laser diode
Laser Control	Security system to turn laser off in case of motor slow down
Focusing System	Fixed focus position

READING FEATURES	
Scan Rate	Typ.:1000 scans/s/ Max.
Maximum Resolution	Min:0.25 mm (10 mils)/Max: 0.50 mm (20 mils)
Max. Reading Distance	See 5.10 reading diagrams
Max. Reading Width	See 5.10 reading diagrams
Max. Depth of Field	See 5.10 reading diagrams
Aperture Angle	60 degrees
Scan Pattern Type	Linear

HUMAN MACHINE INTERFACE	
Keypad	2 Keys
LED Indicators	Status, Com,Trigger, Good, Ready; Test, Learn, Setup, Netconfig

SOFTWARE FEATURES	
Device Programming	multilinguage, browser-based, on board HTML web server interface
Readable Barcodes	22 symbologies including 2/5 family, Code39, Code93, Code128, EAN/UPC, EAN128, ISBN128
Multilabel Reading	Up to 10 different symbologies during the same reading phase
Headers and Terminators	Up to 128-byte headers and 128-byte terminators
Operating Modes	On Line, Test, PackTrack™, Continuous
Barcode Assignment Technology	PackTrack
Reconstruction Code Technology	CRT
Parameter Storage	Non-volatile internal FLASH

ENVIRONMENTAL FEATURES	
Temperature	Operating: 0 to 50 °C (32 to 122 °F) Storage: -20 to 70 °C (-4 to 158 °F)
Relative Humidity	10-90% non-condensing
Ambient light immunity	>30,000 LUX
Vibration Resistance ①	• SINE vibration as per EN60068-2-6 • 2-10Hz: 14mm / 13-55Hz: 1.5mm / 70-500Hz: 2g • 2h per axis / 3 axes
Shock Resistance	As per EN60068-2-27, 30g / 11ms / 3 times up and 3 times down on each axis / 3 axes
Protection Class	IP65

PHYSICAL FEATURES	
Dimensions	216 x 96 x 127 mm [8.5 x 3.8 x 5 in]
Weight	2.0 kg (4.4 lb)
Enclosure	Aluminum Alloy
Connections	I/O, POWER, ETH1, ETH2; Other connections through MA 900

OTHER	
Service Options	Installation services and on-site training
Warranty	2-year limited, parts and labor

① Product not installed on provided bracket.

INDEX

Accessories 4
Applications 1
Backup 159
Barcode Configuration
  Code Collection 94
  Logical Combination 85
  Single Label 76
  Standard Multi Label 80
Barcode Configuration 75
Barcode Scanning Features 164
Barcode Settings Table 69
CE COMPLIANCE x
Compliance viii
Connecting 21
Connecting a Laptop 28
Connection
  Typical 22
Connector Panel
  BCL 900i 27
Control Panel Buttons 174
Conventions viii
CRT 209
Device Settings
  Device Info 146
  Mounting 148
  Options 150
Device Settings 145
Diagnostics 136
Diagnostics 152
Diagnostics
  Monitor 153
Diagnostics
  Read Test 155
Diagnostics
  Status Viewer 156
Digital I/O 133
Electrical
  disconnect device, readily accessible 29
  high-voltage precautions 29
  installation sequence recommended 28, 183, 184, 191, 202, 230
  safety ground 29
Electrical Installation 20
  Guidlines 26
ELECTRICAL SAFETY viii
Energy Saving 138
ESD CAUTION viii
Ethernet
  Ethernet IP 108
  Line Settings 104
  User Sockets 106
  WebSentinel 110
Ethernet 103
External Function Buttons 3
FCC Compliance xi
General View xii
Global Settings 53
HIGH VOLTAGE CAUTION viii
HMI 143
HMI 3
HMI 174
Human Machine Interface 143
Human Machine Interface 3
Human Machine Interface 174
Installation
  Checking 43
  sequence recommended 28, 183, 184, 191, 202, 230
Installation Sequence 11
Introduction 1
Laptop
  Connecting 28
LASER CAUTION viii
LASER SAFETY viii
LED Indicators 173
MA 900
  Photoelectric Sensor Connection 32
  Relay Configuration 39
MA 900 Connections 30
MA Connection Box
  Tachometer Wiring 35
Maintenance 223
Mechanical Installation 9
Messaging
  Message Builder 120
  Message Format 111
  Pass Thru 129
  Protocol Index 126
  Statistics 124
Messaging 111
Model Description 2
Modify Settings 49
Monitor 153
Mounting Specifications 178
MSC 900 Connections 42
NOTES viii
Operating Mode 54
PackTrack
  Side-Mounted Scanner 191
  Top-Mounted Scanner 184
  Verifying Calibration 199
Packtrack Calibration Wizard 178
PackTrack Calibration Wizard 149
PackTrack Wizard 178, 180
Pass Thru 129
Patents vii
Performance 211
Power Connections 29
Power Connector Pin-Out Table 28
Power supply
  disconnect device, readily accessible 29
  requirements 29
Power Supply x
Read Charts 213
Read Test 155
Reboot 161

References vii
Restore 159
Serial Ports
  Aux Port 101
  Main Port 99
Serial Ports 99
Specifications 237
Standard Regulations viii
Startup
  First Time 164
Status Viewer 156
System Info 50
Tachometer
  NPN Output, Wiring 35
  PNP Output, Wiring 37
  Wiring 35
Technical Features 237
Text Entry Tool 47
Troubleshooting 230
Typical Layouts 206
UL Listing x
Update Firmware 162
User Interface Basics 47
Utilities 159
Versions 2
Warning Labels ix
WARNINGS or CAUTIONS viii
Website vii
Wiring
  safety ground 29
  Tachometer 35