Leuze electronic

the sensor people

# BCL300i and BCL301i

## Bar code Readers

TECHNICAL DESCRIPTION

en 01-10/2011 50117107

ПРОМЭЛЕКТРОНИКА / sales@prom-elec.com

Leuze electronic

Leuze electronic GmbH + Co. KG
P.O. Box 1111, D-73277 Owen
Tel. +49(0)7021/573-0,
Fax +49(0)7021/573-199
info@leuze.de • www.leuze.com

# Sales and Service

**Germany**

**Sales Region North**
Phone 07021/573-306
Fax 07021/9850950

Postal code areas
20000-38999
40000-65999
97000-97999

**Sales Region South**
Phone 07021/573-307
Fax 07021/9850911

Postal code areas
66000-96999

**Sales Region East**
Phone 035027/629-106
Fax 035027/629-107

Postal code areas
01000-19999
39000-39999
98000-99999

**Worldwide**

**AR (Argentina)**
Condelectric S.A.
Tel. Int. + 54 1148 361053
Fax Int. + 54 1148 361053

**AT (Austria)**
Schmachtl GmbH
Tel. Int. + 43 732 7646-0
Fax Int. + 43 732 7646-785

**AU + NZ (Australia + New Zealand)**
Balluff-Leuze Pty. Ltd.
Tel. Int. + 61 3 9720 4100
Fax Int. + 61 3 9738 2677

**BE (Belgium)**
Leuze electronic nv/sa
Tel. Int. + 32 2253 16-00
Fax Int. + 32 2253 15-36

**BG (Bulgaria)**
ATICS
Tel. Int. + 359 2 847 6244
Fax Int. + 359 2 847 6244

**BR (Brasil)**
Leuze electronic Ltda.
Tel. Int. + 55 11 5180-6130
Fax Int. + 55 11 5180-6141

**CH (Switzerland)**
Leuze electronic AG
Tel. Int. + 41 41 784 5656
Fax Int. + 41 41 784 5657

**CL (Chile)**
Imp. Tec. Vignola S.A.I.C.
Tel. Int. + 56 3235 11-11
Fax Int. + 56 3235 11-28

**CN (China)**
Leuze electronic Trading
(Shenzhen) Co. Ltd.
Tel. Int. + 86 755 862 64909
Fax Int. + 86 755 862 64901

**CO (Colombia)**
Componentes Electronicas Ltda.
Tel. Int. + 57 4 3511049
Fax Int. + 57 4 3511019

**CZ (Czech Republic)**
Schmachtl CZ s.r.o.
Tel. Int. + 420 244 0015-00
Fax Int. + 420 244 9107-00

**DK (Denmark)**
Leuze electronic Scandinavia ApS
Tel. Int. + 45 48 173200

**ES (Spain)**
Leuze electronic S.A.
Tel. Int. + 34 93 4097900
Fax Int. + 34 93 49035820

**FI (Finland)**
SKS-automaatio Oy
Tel. Int. + 358 20 764-61
Fax Int. + 358 20 764-6820

**FR (France)**
Leuze electronic Sarl.
Tel. Int. + 33 160 0512-20
Fax Int. + 33 160 0503-65

**GB (United Kingdom)**
Leuze electronic Ltd.
Tel. Int. + 44 14 8040 85-00
Fax Int. + 44 14 8040 38-08

**GR (Greece)**
UTECO A.B.E.E.
Tel. Int. + 30 211 1206 900
Fax Int. + 30 211 1206 999

**HK (Hong Kong)**
Sensortech Company
Tel. Int. + 852 26510188
Fax Int. + 852 26510388

**HR (Croatia)**
Tipteh Zagreb d.o.o.
Tel. Int. + 385 1 381 6574
Fax Int. + 385 1 381 6577

**HU (Hungary)**
Kvalix Automatika Kft.
Tel. Int. + 36 1 272 2242
Fax Int. + 36 1 272 2244

**ID (Indonesia)**
P.T. Yabestindo Mitra Utama
Tel. Int. + 62 21 92861859
Fax Int. + 62 21 6451044

**IL (Israel)**
Galoz electronics Ltd.
Tel. Int. + 972 3 9023456
Fax Int. + 972 3 9021990

**IN (India)**
M + V Marketing Sales Pvt Ltd.
Tel. Int. + 91 124 4121623
Fax Int. + 91 124 434233

**IT (Italy)**
Leuze electronic S.r.l.
Tel. Int. + 39 02 26 1106-43
Fax Int. + 39 02 26 1106-40

**JP (Japan)**
C. Ilies & Co., Ltd.
Tel. Int. + 81 3 3443 4143
Fax Int. + 81 3 3443 4118

**KE (Kenia)**
Profa-Tech Ltd.
Tel. Int. + 254 20 828095/6
Fax Int. + 254 20 828129

**KR (South Korea)**
Leuze electronic Co., Ltd.
Tel. Int. + 82 31 3828228
Fax Int. + 82 31 3828522

**MK (Macedonia)**
Tipteh d.o.o. Skopje
Tel. Int. + 389 70 399 474
Fax Int. + 389 23 174 197

**MX (Mexico)**
Movitren S.A.
Tel. Int. + 52 81 8371 8616
Fax Int. + 52 81 8371 8588

**MY (Malaysia)**
Ingermark (M) SDN.BHD
Tel. Int. + 60 360 3427-88
Fax Int. + 60 360 3421-88

**NG (Nigeria)**
SABROW HI-TECH E. & A. LTD.
Tel. Int. + 234 80333 86366
Fax Int. + 234 80333 84463518

**NL (Netherlands)**
Leuze electronic BV
Tel. Int. + 31 418 65 35-44
Fax Int. + 31 418 65 38-08

**NO (Norway)**
Elteco A/S
Tel. Int. + 47 35 56 20-70
Fax Int. + 47 35 56 20-99

**PL (Poland)**
Balluff Sp. z o. o.
Tel. Int. + 48 71 338 49 29
Fax Int. + 48 71 338 49 30

**PT (Portugal)**
LA2P, Lda.
Tel. Int. + 351 21 4 447070
Fax Int. + 351 21 4 447075

**RO (Romania)**
O BOYLE s.r.l
Tel. Int. + 40 2 56201346
Fax Int. + 40 2 56221036

**RS (Republic of Serbia)**
Tipteh d.o.o. Beograd
Tel. Int. + 381 11 3131 057
Fax Int. + 381 11 3018 326

**RU (Russian Federation)**
ALL IMPEX 2001
Tel. Int. + 7 495 9213012
Fax Int. + 7 495 6462092

**SE (Sweden)**
Leuze electronic Scandinavia ApS
Tel. Int. +46 380-490951

**SG + PH (Singapore + Philippines)**
Balluff Asia Pte Ltd
Tel. Int. + 65 6252 43-84
Fax Int. + 65 6252 90-60

**SI (Slovenia)**
Tipteh d.o.o.
Tel. Int. + 386 1200 51-50
Fax Int. + 386 1200 51-51

**SK (Slowakia)**
Schmachtl SK s.r.o.
Tel. Int. + 421 2 58275600
Fax Int. + 421 2 58275601

**TH (Thailand)**
Industrial Electrical Co. Ltd.
Tel. Int. + 66 2 642 6700
Fax Int. + 66 2 642 4250

**TR (Turkey)**
Leuze electronic San.ve Tic.Ltd.Sti.
Tel. Int. + 90 216 456 6704
Fax Int. + 90 216 456 3650

**TW (Taiwan)**
Great Cofue Technology Co., Ltd.
Tel. Int. + 886 2 2983 80-77
Fax Int. + 886 2 2985 33-73

**UA (Ukraine)**
SV Altera OOO
Tel. Int. + 38 044 4961888
Fax Int. + 38 044 4961818

**US + CA (United States + Canada)**
Leuze electronic, Inc.
Tel. Int. + 1 248 486-4466
Fax Int. + 1 248 486-6699

**ZA (South Africa)**
Countapulse Controls (PTY.) Ltd.
Tel. Int. + 27 116 1575-56
Fax Int. + 27 116 1575-13

11/2011

© All rights reserved, especially the right of reproduction, distribution and translation. Copying or reproductions in any form require the written consent of the manufacturer.
Product names used without guarantee of free usability.
Changes reflecting technical improvements may be made.

1 General information ..... 9
1.1 Explanation of symbols ..... 9
1.2 Declaration of conformity ..... 9

2 Safety notices ..... 10
2.1 General safety notices ..... 10
2.2 Safety standards ..... 10
2.3 Approved purpose ..... 10
2.4 Working safely ..... 11

3 Fast commissioning / operating principle ..... 13
3.1 Mounting the BCL 300*i* \ BCL 301*i* ..... 13
3.2 Device arrangement and selection of the mounting location ..... 13
3.3 Electrical connection BCL 300*i* ..... 14
3.4 Electrical connection BCL 301*i* ..... 18
3.5 Starting the device ..... 22
3.6 Bar code reading ..... 24

4 Device description ..... 25
4.1 About the bar code readers of the BCL 300*i* series ..... 25
4.2 Characteristics of the bar code readers of the BCL 300*i* series ..... 26
4.3 Device construction ..... 28
4.4 Reading techniques ..... 32
4.4.1 Line scanner (single line) ..... 32
4.4.2 Line scanner with oscillating mirror ..... 33
4.4.3 Raster scanner (Raster Line) ..... 34
4.5 Standalone connectionBCL 300*i* ..... 35
4.6 Networking - Leuze multiNet plusBCL 301*i* ..... 36
4.7 Leuze multiScan ..... 36
4.8 Heater ..... 38
4.9 External parameter memory ..... 38
4.10 autoReflAct ..... 39
4.11 Reference codes ..... 39
4.12 autoConfig ..... 40

**5 Specifications ..... 41**

**5.1 General specifications of the bar code readers ..... 41**
5.1.1 Line scanner / raster scanner ..... 41
5.1.2 Oscillating-mirror scanner ..... 43
5.1.3 Line scanner / raster scanner with deflection mirror ..... 43

**5.2 Heating models of the bar code readers ..... 44**
5.2.1 Line scanner / raster scanner with heater ..... 45
5.2.2 Oscillating-mirror scanner with heating ..... 45
5.2.3 Line scanner / raster scanner with deflection mirror and heating ..... 46

**5.3 Dimensioned drawings ..... 47**
5.3.1 Dimensioned drawing of complete overview of the BCL 300*i* \ BCL 301*i* with MS 3xx / MK 3xx ..... 47
5.3.2 Dimensioned drawing of complete overview of the BCL 300*i* \ BCL 301*i* with KB 301-3000 ..... 47
5.3.3 Dimensioned drawing of line scanner with / without heating ..... 48
5.3.4 Dimensioned drawing of deflection mirror scanner with / without heating ..... 49
5.3.5 Dimensioned drawing of oscillating-mirror scanner with / without heating ..... 50
5.3.6 Dimensioned drawing of MS 3xx hood with integrated connectors / MK 3xx terminal hood51
5.3.7 Dimensioned drawing of KB 301-3000 cable hood ..... 52
5.3.8 Dimensioned drawing of MA 100 terminal box ..... 53

**5.4 Reading field curves / optical data ..... 54**
5.4.1 Bar code characteristics ..... 54
5.4.2 Raster scanner ..... 55

**5.5 Reading field curves ..... 56**
5.5.1 High Density (N) - optics: BCL 300*i* \ BCL 301*i* S/R1 N 102 (H) ..... 57
5.5.2 High Density (N) - optics: BCL 300*i* \ BCL 301*i* S/R1 N 100 (H) ..... 57
5.5.3 High Density (N) - optics: BCL 300*i* \ BCL 301*i* ON 100 (H) ..... 58
5.5.4 Medium Density (M) - optics: BCL 300*i* \ BCL 301*i* S/R1 M 102 (H) ..... 59
5.5.5 Medium Density (M) - optics: BCL 300*i* \ BCL 301*i* S/R1 M 100 (H) ..... 59
5.5.6 Medium Density (M) - optics: BCL 300*i* \ BCL 301*i* OM 100 (H) ..... 60
5.5.7 Low Density (F) - optics: BCL 300*i* \ BCL 301*i* S/R1 F 102 (H) ..... 61
5.5.8 Low Density (F) - optics: BCL 300*i* \ BCL 301*i* S/R1 F 100 (H) ..... 61
5.5.9 Low Density (F) - optics: BCL 300*i* \ BCL 301*i* OF 100 (H) ..... 62
5.5.10 Ultra Low Density (L) - optics: BCL 300*i* \ BCL 301*i* S/R1 L 102 (H) ..... 63
5.5.11 Ultra Low Density (L) - optics: BCL 300*i* \ BCL 301*i* S/R1 L 100 (H) ..... 63
5.5.12 Ultra Low Density (L) - optics: BCL 300*i* \ BCL 301*i* OL 100 (H) ..... 64

**6 Installation and mounting ... 65**

**6.1 Storage, transportation ... 65**

**6.2 Mounting the BCL 300*i* \ BCL 301*i* ... 66**
6.2.1 Fastening with M4 x 5 screws ... 66
6.2.2 BT 56 mounting device ... 67
6.2.3 BT 59 mounting device ... 69

**6.3 Device arrangement ... 70**
6.3.1 Selecting a mounting location ... 70
6.3.2 Avoiding total reflection – Line scanner ... 71
6.3.3 Avoiding total reflection – deflection mirror scanner ... 71
6.3.4 Avoiding total reflection – oscillating-mirror scanner ... 72
6.3.5 Mounting location ... 72
6.3.6 Devices with integrated heating ... 73
6.3.7 Possible reading angles between BCL 300*i* \ BCL 301*i* and bar code. ... 73

**6.4 Cleaning ... 74**

**7 Electrical connection ... 75**

**7.1 Safety notices for the electrical connection ... 77**

**7.2 Electrical connection BCL 300*i* ... 78**
7.2.1 MS 300 hood with 2 integrated M12 connectors ... 78
7.2.2 MK 300 terminal hood with spring-loaded terminals ... 79
7.2.3 MA 100 terminal box and corresponding KB 301-3000 cable hood ... 81
7.2.4 KB 301-3000 cable hood ... 82
7.2.5 Standalone operationBCL 300*i* ... 82

**7.3 Electrical connection BCL 301*i* ... 83**
7.3.1 MS 301 hood with 3 integrated M12 connectors ... 83
7.3.2 MK 301 terminal hood with spring-loaded terminals ... 84
7.3.3 MA 100 terminal box and corresponding KB 301-3000 cable hood ... 86
7.3.4 Network operation BCL 301*i* in the Leuze multiNet plus ... 87

**7.4 Detailed description of the connections ... 88**
7.4.1 PWR / SW IN/OUT - Voltage supply and switching input/outputs 1 and 2 ... 88
7.4.2 SERVICE – USB interface (Mini-B type) ... 90
7.4.3 HOST / BUS IN for BCL 300*i* ... 91
7.4.4 HOST / BUS IN for BCL 301*i* ... 93
7.4.5 BUS OUT for the BCL 301*i* ... 94

**7.5 Leuze multiNet plus ... 95**
7.5.1 Wiring the multiNet plus ... 96
7.5.2 The BCL 301*i* as network slave ... 97

**7.6 Cable lengths and shielding ... 97**

**8 Display elements and display ... 98**
**8.1 LED indicators BCL 300*i* \ BCL 301*i* ... 98**
**8.2 Display BCL 300*i* \ BCL 301*i* ... 100**

**9 Leuze webConfig tool ... 102**
**9.1 Connecting the SERVICE USB interface ... 102**
**9.2 Installing the required software ... 103**
9.2.1 System requirements ... 103
9.2.2 Installing the USB driver ... 103
**9.3 Starting the webConfig tool ... 104**
**9.4 Short description of the webConfig tool ... 105**
9.4.1 Module overview in the Configuration menu ... 105

**10 Commissioning and configuration ... 107**
**10.1 BCL 300*i* ... 108**
10.1.1 Measures to be performed prior to the initial commissioning ... 108
10.1.2 Starting the device ... 108
**10.2 BCL 301*i* - multiNet plus Slave ... 109**
10.2.1 Measures to be performed prior to the initial commissioning ... 109
10.2.2 Starting the device ... 109
**10.3 Additional settings for the BCL 300*i* and the BCL 301*i* ... 110**
10.3.1 Decoding and processing the read data ... 110
10.3.2 Control of the decoding ... 112
10.3.3 Control of the switching outputs ... 113
**10.4 Transmitting configuration data ... 114**
10.4.1 Via the webConfig tool ... 114
10.4.2 Replacing a defective BCL 300*i* \ BCL 301*i* ... 114

**11 Online commands ... 115**
**11.1 Overview of commands and parameters ... 115**
11.1.1 General 'online' commands ... 116
11.1.2 'Online' commands for system control ... 123
11.1.3 'Online' commands for configuration of switching inputs/outputs ... 124
11.1.4 'Online' commands for the parameter set operations ... 127

**12 Diagnostics and troubleshooting ... 134**
**12.1 General causes of errors ... 134**
**12.2 Interface errors ... 134**

**13 Type overview and accessories ... 136**
**13.1 Part number code ... 136**
**13.2 BCL 300*i* ... 137**
**13.3 BCL 301*i* ... 138**
**13.4 Connection hood / terminal box accessories ... 139**
**13.5 Accessory terminating resistor ... 139**
**13.6 Accessory connectors ... 139**
**13.7 Accessory USB cable ... 139**
**13.8 Accessory mounting device ... 139**
**13.9 Reflector accessories for autoReflAct ... 139**
**13.10 Accessory ready-made cables for voltage supply ... 140**
13.10.1 Contact assignment of PWR connection cable ... 140
13.10.2 Specifications of the cables for voltage supply ... 140
13.10.3 Order codes of the cables for voltage supply ... 140
**13.11 Accessory ready-made cables for bus connection ... 141**
13.11.1 General information ... 141
13.11.2 Contact assignment RS 485, connection cable KB PB… for multiNet plus ... 141
13.11.3 Contact assignment RS 232, connection cable KB SSI/IBS… ... 142
13.11.4 Technical data of interface connection cables ... 142
13.11.5 Order code interface connection cable ... 142

**14 Maintenance ... 144**
**14.1 General maintenance information ... 144**
**14.2 Repairs, servicing ... 144**
**14.3 Disassembling, packing, disposing ... 144**

**15 Appendix ... 145**
**15.1 Declaration of Conformity ... 145**
**15.2 ASCII character set ... 147**
**15.3 Bar code samples ... 151**
15.3.1 Module 0.3 ... 151
15.3.2 Module 0.5 ... 152

Figure 2.1: Attachment of the stick-on labels with warning notices at the BCL 300*i* \ BCL 301*i* ... 12
Figure 3.1: BCL 300*i* - MS 300 hood with integrated M12 connectors ... 14
Figure 3.2: BCL 300*i* - MK 300 terminal hood with spring-loaded terminals ... 15
Figure 3.3: Cable fabrication for MK 300 terminal hood ... 15
Figure 3.4: BCL 300*i* - MA 100 terminal box with KB 301-3000 cable hood ... 16
Figure 3.5: BCL 300*i* - KB 301-3000 cable hood ... 17
Figure 3.6: BCL 301*i* - MS 301 hood with integrated M12 connectors ... 18
Figure 3.7: BCL 301*i* - MK 301 terminal hood with spring-loaded terminals ... 19
Figure 3.8: Cable fabrication for MK 301 terminal hood ... 19
Figure 3.9: BCL 301*i* - MA 100 terminal box with KB 301-3000 cable hood ... 20
Figure 4.1: Line scanner, line scanner with deflection mirror and oscillating-mirror scanner ... 25
Figure 4.2: Possible bar code orientation ... 27
Figure 4.3: BCL 300*i* \ BCL 301*i* device construction - line scanner ... 28
Figure 4.4: BCL 300*i* \ BCL 301*i* device construction -line scanner with deflection mirror ... 28
Figure 4.5: BCL 300*i* \ BCL 301*i* device construction - oscillating-mirror scanner ... 29
Figure 4.6: Device construction MS 300/MS 301 hood with integrated connectors ... 30
Figure 4.7: Device construction MK 300/MK 301 hood with integrated connectors ... 30
Figure 4.8: KB 301/3000 cable hood device construction ... 31
Figure 4.9: MA 100 terminal box device construction ... 31
Figure 4.10: Deflection principle for the line scanner ... 32
Figure 4.11: Deflection principle for the line scanner with oscillating mirror add-on ... 33
Figure 4.12: Deflection principle for the raster scanner ... 34
Figure 4.13: Standalone connectionBCL 300*i* ... 35
Figure 4.14: Networking possibilities using the multiNet plus ... 36
Figure 4.15: Scanner arrangement with the multiScan function ... 37
Figure 4.16: Reflector arrangement for autoReflAct ... 39
Table 5.1: Specifications of the BCL 301*i* and BCL 300*i* line/raster scanners without heating ... 41
Table 5.2: Specifications of the BCL 301*i* and BCL 300*i* oscillating-mirror scanners without heating ... 43
Table 5.3: Specifications of the BCL 301*i* and BCL 300*i* deflection-mirror scanners without heating ... 43
Table 5.4: Specifications of the BCL 301*i* and BCL 300*i* line/raster scanners with heating ... 45
Table 5.5: Specifications of the BCL 301*i* and BCL 300*i* oscillating-mirror scanners with heating ... 46
Table 5.6: Specifications of the BCL 301*i* and BCL 300*i* deflection-mirror scanners with heating ... 46
Figure 5.1: Dimensioned drawing of complete overview of the BCL 300*i* \ BCL 301*i* with MS 3xx / MK 3xx ... 47
Figure 5.2: Dimensioned drawing of complete overview of the BCL 300*i* \ BCL 301*i* with KB 301-3000 ... 47
Figure 5.3: Dimensioned drawing BCL 300*i* \ BCL 301*i* line scanner S…102 ... 48
Figure 5.4: Dimensioned drawing BCL 300*i* \ BCL 301*i* deflection mirror scanner S…100 ... 49
Figure 5.5: Dimensioned drawing BCL 300*i* \ BCL 301*i* oscillating mirror scanner O…100 ... 50
Figure 5.6: Dimensioned drawing of MS 3xx hood with integrated connectors / MK 3xx terminal hood ... 51
Figure 5.7: Dimensioned drawing of KB 301-3000 cable hood ... 52
Figure 5.8: Dimensioned drawing of MA 100 terminal box ... 53
Figure 5.9: The most important characteristics of a bar code ... 54
Table 5.7: Raster line cover as a function of the distance ... 55
Figure 5.10: Zero position of the reading distance ... 56
Table 5.8: Reading conditions ... 56
Figure 5.11: "High Density" reading field curve for line scanner without deflection mirror ... 57
Figure 5.12: "High Density" reading field curve for line scanner with deflection mirror ... 57
Figure 5.13: "High Density" reading field curve for oscillating-mirror scanners ... 58
Figure 5.14: Lateral "High Density" reading field curve for oscillating-mirror scanners ... 58

Figure 5.15: "Medium Density" reading field curve for line scanner without deflection mirror ..... 59
Figure 5.16: "Medium Density" reading field curve for line scanner with deflection mirror ..... 59
Figure 5.17: "Medium Density" reading field curve for oscillating-mirror scanners ..... 60
Figure 5.18: Lateral "Medium Density" reading field curve for oscillating-mirror scanners ..... 60
Figure 5.19: "Low Density" reading field curve for line scanner without deflection mirror ..... 61
Figure 5.20: "Low Density" reading field curve for line scanner with deflection mirror ..... 61
Figure 5.21: "Low Density" reading field curve for oscillating-mirror scanners ..... 62
Figure 5.22: Lateral "Low Density" reading field curve for oscillating-mirror scanners ..... 62
Figure 5.23: "Ultra Low Density" reading field curve for line scanner without deflection mirror ..... 63
Figure 5.24: "Ultra Low Density" reading field curve for line scanner with deflection mirror ..... 63
Figure 5.25: "Ultra Low Density" reading field curve for oscillating-mirror scanners ..... 64
Figure 5.26: Lateral "Ultra Low Density" reading field curve for oscillating-mirror scanners ..... 64
Figure 6.1: Device name plate BCL 300*i* \ BCL 301*i* ..... 65
Figure 6.2: Fastening options using M4x5 threaded holes ..... 66
Figure 6.3: BT 56 mounting device ..... 67
Figure 6.4: Mounting example of BCL 300*i* \ BCL 301*i* with BT 56 ..... 68
Figure 6.5: BT 59 mounting device ..... 69
Figure 6.6: Total reflection – line scanner ..... 71
Figure 6.7: Total reflection – line scanner ..... 71
Figure 6.8: Total reflection – BCL 300*i* \ BCL 301*i* with oscillating mirror ..... 72
Figure 6.9: Reading angle for the line scanner ..... 73
Figure 7.1: Location of the electrical connections ..... 76
Figure 7.2: BCL 300*i* - MS 300 hood with integrated M12 connectors ..... 78
Figure 7.3: BCL 300*i* - MK 300 terminal hood with spring-loaded terminals ..... 79
Figure 7.4: Cable fabrication for MK 300 terminal hood ..... 79
Figure 7.5: BCL 300*i* - MA 100 terminal box with KB 301-3000 cable hood ..... 81
Figure 7.6: BCL 300*i* - KB 301-3000 cable hood ..... 82
Figure 7.7: BCL 301*i* - MS 301 hood with integrated M12 connectors ..... 83
Figure 7.8: BCL 301*i* - MK 301 terminal hood with spring-loaded terminals ..... 84
Figure 7.9: Cable fabrication for MK 301 terminal hood ..... 85
Figure 7.10: BCL 301*i* - MA 100 terminal box with KB 301-3000 cable hood ..... 86
Table 7.1: Pin assignment PWR / SW IN/OUT ..... 88
Figure 7.1: Switching input connection diagram SWIO_1 and SWIO_2 ..... 89
Figure 7.2: Switching output connection diagram SWIO_1 / SWIO_2 ..... 90
Table 7.2: Pin assignment SERVICE – Mini-B type USB interface ..... 90
Table 7.3: Pin assignment HOST / BUS IN BCL 300*i* ..... 91
Figure 7.3: BCL 300*i* - Pin assignments - HOST / BUS IN as RS 232 ..... 92
Figure 7.4: BCL 300*i* - Pin assignments - HOST / BUS IN as RS 422 ..... 92
Table 7.4: Pin assignment HOST / BUS IN BCL 301*i* ..... 93
Table 7.5: Pin assignment BUS OUTBCL 301*i* ..... 94
Figure 7.5: Leuze multiNet plus system topology ..... 95
Figure 7.6: Leuze multiNet plus system topology ..... 96
Table 7.6: Cable lengths and shielding ..... 97
Figure 8.1: BCL 300*i* \ BCL 301*i* - LED indicators ..... 98
Figure 8.2: BCL 300*i* \ BCL 301*i* - Display ..... 100
Figure 9.1: Connecting the SERVICE USB interface ..... 102
Figure 9.2: The start page of the webConfig tool ..... 104
Figure 9.3: Module overview in the webConfig tool ..... 105

Figure 10.1: Storing configuration data in the webConfig tool ..... 114
Table 12.1: General causes of errors ..... 134
Table 12.2: Interface error ..... 134
Table 13.2: Type overview BCL 300*i* ..... 137
Table 13.3: Type overview BCL 301*i* ..... 138
Table 13.4: Connection hoods / terminal boxes for the BCL 300*i* \ BCL 301*i* ..... 139
Table 13.5: Terminating resistor for the BCL 301*i* ..... 139
Table 13.6: Connectors for the BCL 300*i* \ BCL 301*i* ..... 139
Table 13.7: Service cable for the BCL 300*i* \ BCL 301*i* ..... 139
Table 13.8: Mounting devices for the BCL 300*i* \ BCL 301*i* ..... 139
Table 13.9: Reflector for autoReflAct operation ..... 139
Table 13.10: PWR cables for the BCL 300*i* \ BCL 301*i* ..... 140
Figure 13.11: Cable configuration multiNet plus connection cables ..... 141
Table 13.12: Interface connection cable for the BCL 300*i* \ BCL 301*i* ..... 142
Figure 15.1: Declaration of conformity BCL 300*i* \ BCL 301*i* ..... 145
Figure 15.2: Connection hood / connector unit declaration of conformity ..... 146
Figure 15.3: Bar code sample labels (module 0.3) ..... 151
Figure 15.4: Bar code sample labels (module 0.5) ..... 152

# 1 General information

## 1.1 Explanation of symbols

The symbols used in this technical description are explained below.

***Attention!***

*This symbol precedes text messages which must strictly be observed. Failure to comply with this information results in injuries to personnel or damage to the equipment.*

***Attention Laser!***

*This symbol warns of possible danger caused by hazardous laser radiation.*

***Notice!***

*This symbol indicates text passages containing important information.*

## 1.2 Declaration of conformity

The bar code readers of the BCL 300*i* series have been developed and manufactured in accordance with the applicable European standards and directives.

***Notice!***

*You can find the Declaration of Conformity of the devices in the appendix of the manual on page 145.*

The manufacturer of the product, Leuze electronic GmbH & Co KG in D-73277 Owen, possesses a certified quality assurance system in accordance with ISO 9001.

# 2 Safety notices

## 2.1 General safety notices

### *Documentation*

All entries in this technical description must be heeded, in particular the present chapter "Safety notices". Keep this technical description in a safe place. It should be available at all times.

### *Safety regulations*

Observe the locally applicable regulations and the rules of the employer's liability insurance association.

### *Repair*

Repairs must only be carried out by the manufacturer or an authorized representative.

## 2.2 Safety standards

The bar code readers of the BCL 300*i* series were developed, manufactured and tested in accordance with the applicable safety standards. They correspond to the state of the art.

## 2.3 Approved purpose

### *Attention!*

*The protection of personnel and the device cannot be guaranteed if the device is operated in a manner not corresponding to its intended use.*

Bar code readers of the BCL 300*i* series are conceived as stationary, high-speed scanners with integrated decoders for all current bar codes used for automatic object detection.

In particular, unauthorized uses include:

- in rooms with explosive atmospheres
- operation for medical purposes

### *Areas of application*

The bar code readers of the BCL 300*i* series are especially designed for the following areas of application:

- Storage technology and materials handling, in particular for object identification on fast-moving transport systems
- Pallet transport systems
- Automobile sector
- Omnidirectional reading

## 2.4 Working safely

***Attention!***

*Access and changes to the device, except where expressly described in this operating manual, are not authorized.*

### *Safety regulations*

Observe the locally applicable legal regulations and the rules of the employer's liability insurance association.

### *Qualified personnel*

Mounting, commissioning and maintenance of the device must only be carried out by qualified personnel.
Electrical work must be carried out by a certified electrician.

***Attention, laser radiation!***

***If you look into the beam path over a longer time period, the retina of your eye may be damaged!***

***Never look directly into the beam path!***

***Do not point the laser beam of the BCL 300i \ BCL 301i at persons!***

***When mounting and aligning the BCL 300i \ BCL 301i, avoid reflections of the laser beam off reflective surfaces!***

***The BCL 300i \ BCL 301i bar code readers correspond to the EN 60825-1 safety standard for a class 2 laser systems. They also comply with the U.S. 21 CFR 1040.10 regulations for a class II laser product except for deviations pursuant to Laser Notice No. 50, dated July 26, 2001.***

***Radiant Energy: The BCL 300i \ BCL 301i uses a low power visible laser diode. The emitted wavelength is 655nm. The average laser power is less than 1mW in accordance with the definition of laser class 2.***

***Adjustments: Do not attempt any adjustments to or alterations of this product.***

***Do not remove the protective housing of the bar code reader. There are no user-serviceable parts inside.***

***The glass optics cover is the only aperture through which laser radiation may be observed on this product. A failure of the scanner motor, while the laser diode continues to emit a laser beam, may cause emission levels to exceed those for safe operation. The bar code reader has protective devices to prevent this occurrence. If, however, a stationary beam is emitted, the failing bar code reader should be disconnected from the voltage supply immediately.***

***CAUTION: Use of controls or adjustments or performance of procedures other than specified herein may result in hazardous light exposure.***

***The use of optical instruments or devices in combination with the device increases the danger of eye damage!***

***The housing of the BCL 300i \ BCL 301i is provided with warning notices A and B above and next to the reading window as shown in the following figure:***

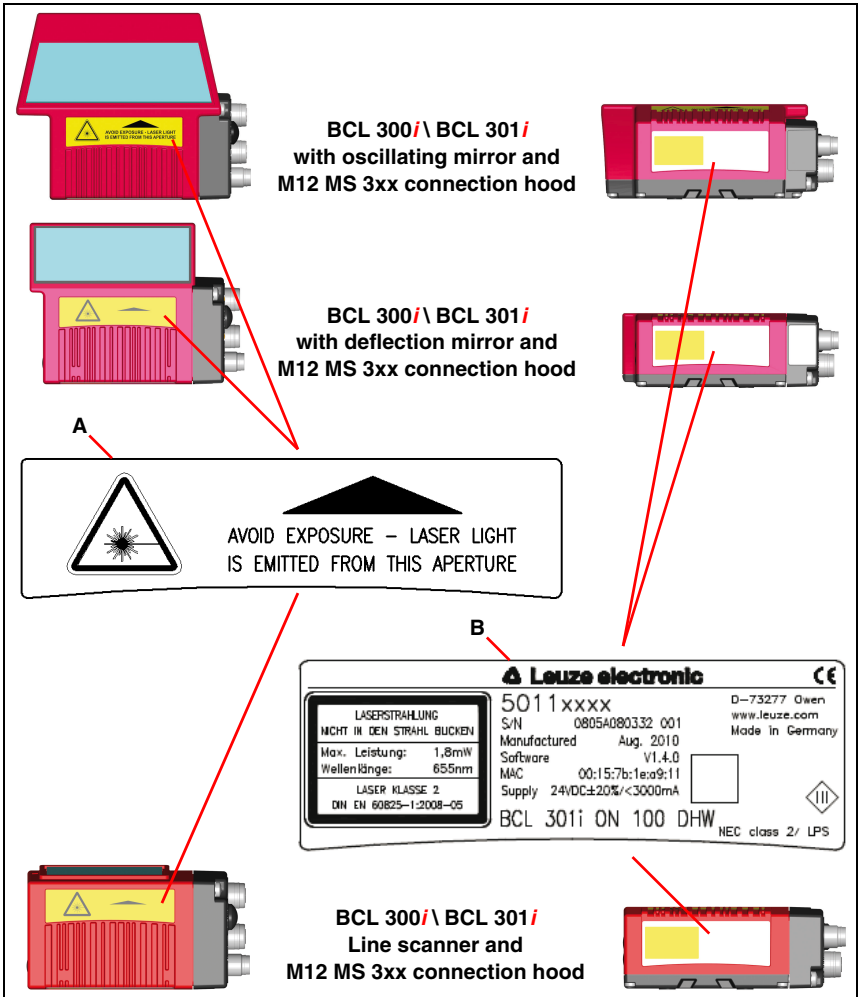


| | |
|---|---|
| **A** | Warning: laser aperture |
| **B** | Name plate |

Figure 2.1: Attachment of the stick-on labels with warning notices at the BCL 300*i* \ BCL 301*i*

# 3 Fast commissioning / operating principle

Below you will find a short description for the initial commissioning of the BCL 300*i* \ BCL 301*i*. Detailed explanations for all listed points can be found throughout this technical description.

## 3.1 Mounting the BCL 300*i* \ BCL 301*i*

The BCL 300*i* \ BCL 301*i* bar code readers can be mounted in two different ways:

- Via four M4x6 screws on the bottom of the device.
- Via a BT 56 mounting device in the fastening groove on the bottom of the housing.

## 3.2 Device arrangement and selection of the mounting location

In order to select the right mounting location, several factors must be considered:

- Size, orientation, and position tolerance of the bar codes on the objects to be scanned.
- The reading field of the BCL 300*i* \ BCL 301*i* in relation to the bar code module width.
- The resulting minimum and maximum reading distance from the respective reading field.
- The permissible cable lengths between the BCL 300*i* \ BCL 301*i* and the host system depending on which interface is used.
- The correct time for data output. The BCL 300*i* \ BCL 301*i* should be positioned in such a way that, taking into consideration the time required for data processing and the conveyor belt speed, there is sufficient time to e.g. initiate sorting operations on the basis of the read data.
- The display and control panel should be very visible and accessible.
- For configuring and commissioning with the webConfig tool, the USB interface should be easily accessible.

For specific information, please refer to chapter 6 and chapter 7.

***Notice!***

*The beam exits the BCL 300i \ BCL 301i as follows for the respective devices:*
*- line scanner **parallel** to the **housing base***
*- deflection mirror **105 degrees** to the **housing base***
*- oscillating mirror **perpendicular** to the **housing base.***
*The black areas in figure 6.2 are the housing base. The best read results are obtained when:*

- *The BCL 300i \ BCL 301i is mounted in such a way that the scanning beam is incident on the bar code at an angle of inclination greater than ±10° … 15° to vertical.*
- *The reading distance lies in the middle area of the reading field.*
- *The bar code labels are of good print quality and have good contrast ratios.*
- *You do not use high-gloss labels.*
- *There is no direct sunlight.*

## 3.3 Electrical connection BCL 300*i*

For the electrical connection of the BCL 300*i*, 4 connection variants are available.

The **voltage supply** (18 … 30 VDC) is connected acc. to the connection type selected.

**2 freely programmable switching inputs/outputs** for individual adaptation to the respective application are also available here. Detailed information on this topic can be found in chapter 7.4.1 and chapter 7.4.3.

### *MS 300 hood with 2 integrated M12 connectors*

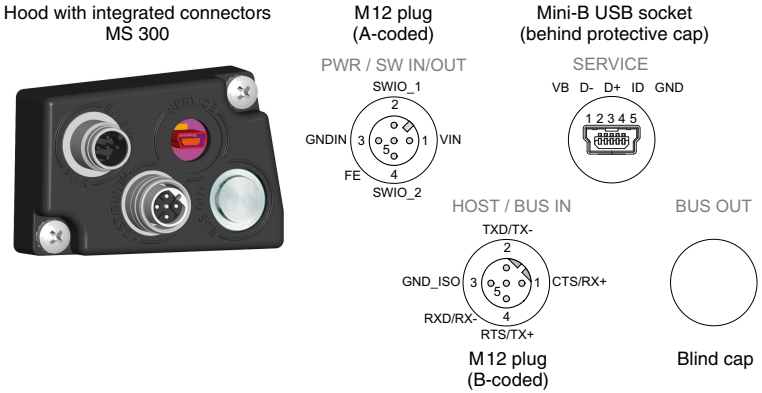


Figure 3.1: BCL 300*i* - MS 300 hood with integrated M12 connectors

***Notice!***

*The shielding connection is done via the M12 connector housing.*

***Notice!***

*The integrated parameter memory for the simple replacement of the BCL 300i is located in the MS 300.*

***MK 300 terminal hood with spring-loaded terminals***

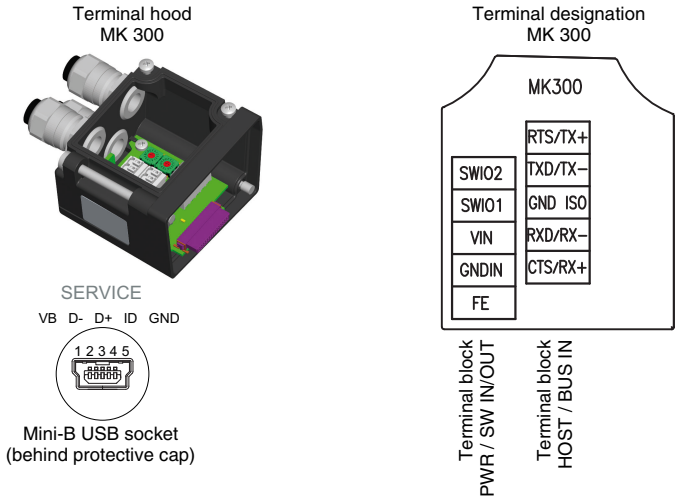


Figure 3.2: BCL 300*i* - MK 300 terminal hood with spring-loaded terminals

***Notice!***

*The integrated parameter memory for simple exchange of the BCL 300i is located in the MK 300.*

**Cable fabrication and shielding connection**

Remove approx. 78mm of the connection cable sheathing. 15mm of sheath of the shielded line must be freely accessible.

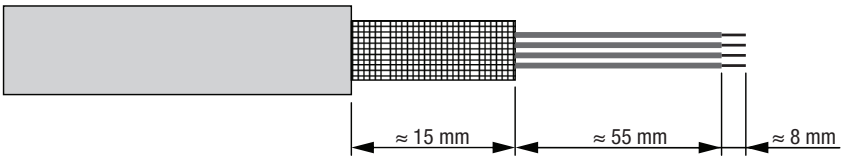


Figure 3.3: Cable fabrication for MK 300 terminal hood

The shield is automatically contacted when the cable is lead into the metal screw fitting and fastened when the cord grip is closed. Then lead the individual wires into the terminals according to the diagram. Wire end sleeves are not necessary.

***MA 100 terminal box and corresponding KB 301-3000 cable hood***

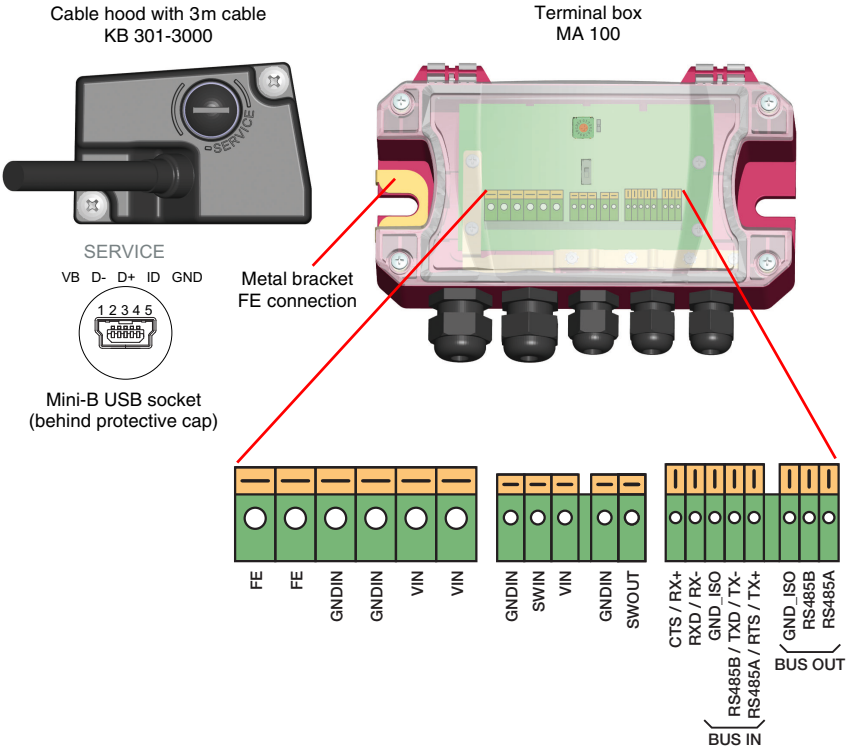


Figure 3.4: BCL 300*i* - MA 100 terminal box with KB 301-3000 cable hood

***Notice!***

*The left side of the housing of the MA 100 features a metal bracket for connecting functional earth FE to the installation surface (e.g. metallic equipment).*

*The MA 100 contains a shielding terminal for the shielding connection of the KB 301-3000.*

### *KB 301-3000 cable hood*

Cable hood with 3m cable
KB 301-3000

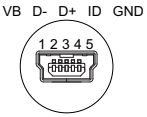


Mini-B USB socket
(behind protective cap)

**Assignment**

| Core color | Signal |
|---|---|
| white | FE |
| white - black | GNDIN |
| black | VIN |
| white - green | SWIO2 |
| gray | SWIO1 |
| white - yellow | RXD / RX- |
| white - red | TXD / TX- |
| yellow | CTS / RX+ |
| red | RTS / TX+ |
| violet | GND_RS232/422 |
| white - brown | Reserved |
| brown | Reserved |
| white - orange | Reserved |
| orange | Reserved |
| green | Reserved |
| blue | Reserved |

Figure 3.5: BCL 300*i* - KB 301-3000 cable hood

***Notice!***

*A contact surface for the shielding connection is located on the cable end of the KB 301-3000.*

### *Standalone operation BCL 300i*

During standalone operation of the BCL 300*i*, the host interface of the superior system is connected to HOST/BUS IN. Please make certain that the correct interface is used on the superior system. The standard setting of the BCL 300*i* for the host interface is RS 232.

## 3.4 Electrical connection BCL 301*i*

For the electrical connection of the BCL 301*i*, 3 connection variants are available.

The **voltage supply** (18 … 30 V DC) is connected acc. to the connection type selected.

**2 freely programmable switching inputs/outputs** for individual adaptation to the respective application are also available here. Detailed information on this topic can be found in chapter 7.4.1 and chapter 7.4.3.

### *MS 301 hood with 3 integrated M12 connectors*

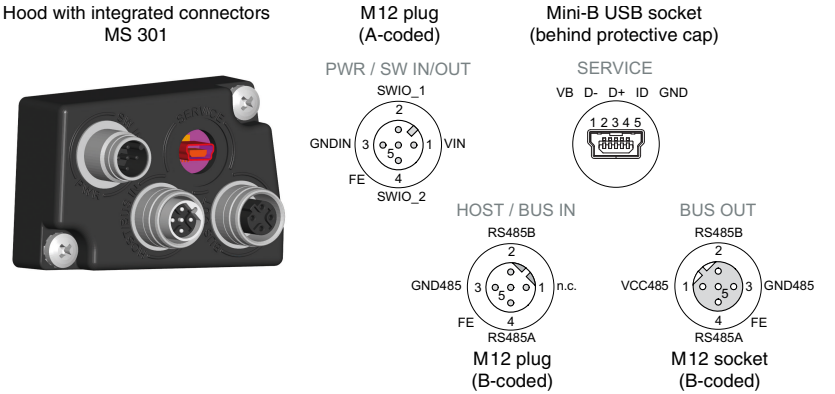


Figure 3.6: BCL 301*i* - MS 301 hood with integrated M12 connectors

***Notice!***

*The shielding connection is done via the M12 connector housing.*

***Notice!***

*The integrated parameter memory for the simple replacement of the BCL 301i is located in the MS 301.*

***Notice!***

*The bus is looped through the MS 301, i.e. the bus is not interrupted when the BCL 301i is removed from the MS 301.*
*The bus is terminated at BUS OUT via an external mounted terminating resistor (see chapter 13.5 "Accessory terminating resistor").*

### *MK 301 terminal hood with spring-loaded terminals*

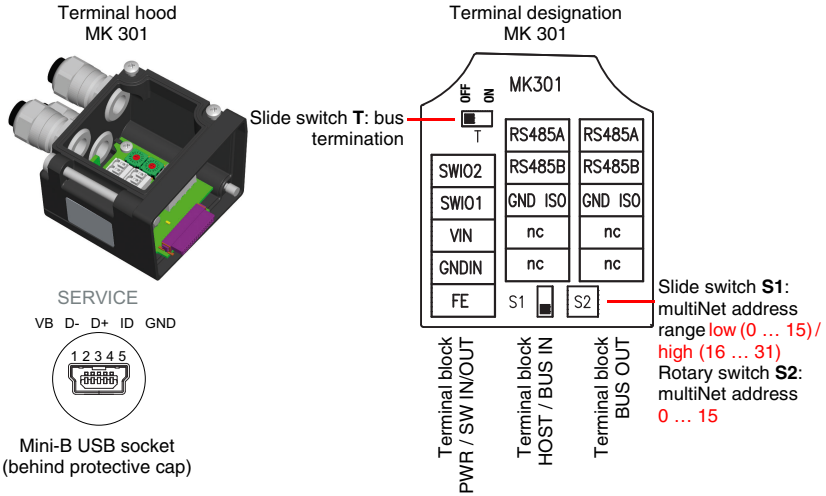


Figure 3.7: BCL 301*i* - MK 301 terminal hood with spring-loaded terminals

***Notice!***

*The integrated parameter memory for simple exchange of the BCL 301i is located in the MK 301.*

***Notice!***

*The bus is looped through the MK 301, i.e. the bus is not interrupted when the BCL 301i is removed from the MK 301. The bus is terminated via slide switch **T** in the MK 301. If the termination is activated (slide switch **T** in the **ON** position), the downstream bus is disconnected.*

**Cable fabrication and shielding connection**

Remove approx. 78mm of the connection cable sheathing. 15mm of sheath of the shielded line must be freely accessible.

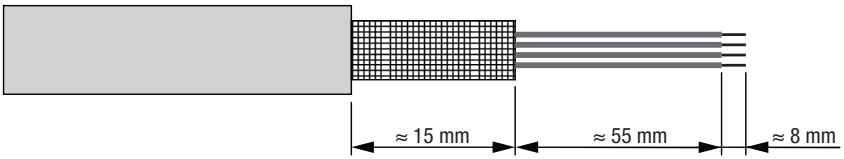


Figure 3.8: Cable fabrication for MK 301 terminal hood

The shield is automatically contacted when the cable is lead into the metal screw fitting and fastened when the cord grip is closed. Then lead the individual wires into the terminals according to the diagram. Wire end sleeves are not necessary.

***MA 100 terminal box and corresponding KB 301-3000 cable hood***

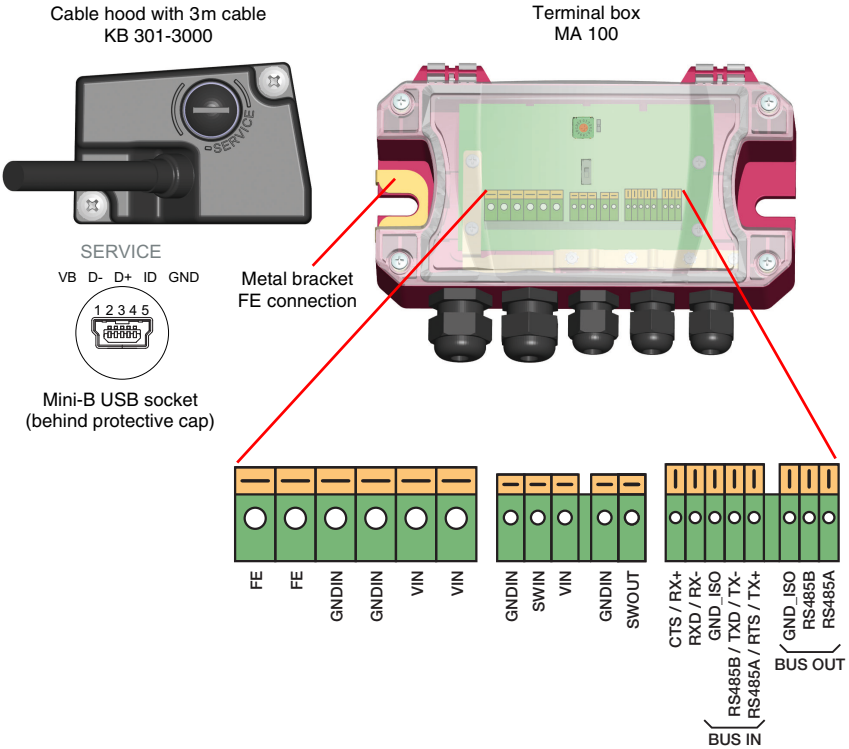


Figure 3.9: BCL 301*i* - MA 100 terminal box with KB 301-3000 cable hood

***Notice!***

*The left side of the housing of the MA 100 features a metal bracket for connecting functional earth FE to the installation surface (e.g. metallic equipment).*

*The MA 100 contains a shielding terminal for the shielding connection of the KB 301-3000.*

***Notice!***

*The bus is looped through the MA 100, i.e. the bus is not interrupted when the BCL 301i is removed from the KB 301-3000. The bus is terminated via slide switch **T** in the MA 100. If the termination is activated (slide switch **T** in the **ON** position), the downstream bus is disconnected.*

***Notice!***

*Due to the lack of the address switch, the KB 301-3000 cable hood connection variant is not possible on the BCL 301**i*** ***without*** *the MA 100 terminal box, in contrast to the BCL 300**i**.*

### *Network operation BCL 301i in the Leuze multiNet plus*

In Leuze multiNet plus network operation, the incoming bus is connected to **BUS IN** and the outgoing bus to **BUS OUT**. If the network address of the BCL 301*i* is not 0, the device starts up in multiNet slave mode and attempts to make contact with a multiNet master.

If **BUS OUT** is not used for the continuing connection to the next participant, **BUS OUT** must be terminated with a terminating resistor. For this reason, a terminator plug is available for the MS 301 (see chapter 13.5 "Accessory terminating resistor"); in the MA 100 and the MK 301, termination is activated by a switch.

The device address is set in multiNet via the slide or rotary switch provided for this in the MA 100, MK 301 or MS 301.

## 3.5 Starting the device

*Connect the +18 … 30 VDC supply voltage (typ. +24 VDC); the BCL 300i \ BCL 301i starts up.*

The **PWR** and **BUS** LEDs display the device status.

### *PWR LED*

| | | |
|---|---|---|
| PWR | **flashes green** | **Device ok, initialization phase** |
| PWR | **green continuous light** | **Power On, device ok** |
| PWR | **green, briefly off - on** | **Good read, successful reading** |
| PWR | **green, briefly off - briefly red - on** | **No read, reading not successful** |
| PWR | **orange continuous light** | **Service mode** |
| PWR | **flashes red** | **Warning set** |
| PWR | **red continuous light** | **Error, device error** |

### *BUS LED*

| | | |
|---|---|---|
| BUS | **flashes green** | **Initialization** |
| BUS | **green continuous light** | **Bus operation ok** |
| BUS | **flashes red** | **Communication error** |
| BUS | **red continuous light** | **Bus error** |

If a display is available, the following information appears successively during startup:

- Startup
- Device designation e.g. BCL 301i SM 102 D
- Reading Result

If Reading Result is displayed, the device is ready.

### *Standalone operation BCL 300i*

After voltage (18 … 30VDC) has been connected to the switching input, a read process is activated. In the standard setting, all common code types for decoding are released; only the **2/5 interleaved** code type is limited to 10 digits of code content.

If a code is lead through the reading field, the code content is decoded and output via the connected interface.

The standard protocol for this is: **9600 Baud, 8 data bits, no parity, 1 stop bit**.

### *MultiNet operation BCL 301i*

If the BCL 301*i* detects an address larger than **0** after connecting the supply voltage, it registers itself with the **multiNet** master via the **multiNet**. If the device is detected in the network, the **BUS** LED turns green and the BCL 301*i* is ready.

By connecting voltage (18 … 30VDC) on the switching input, a read process is activated. In the standard setting, all common code types for decoding are released; only the **2/5 interleaved** code type is limited to 10 digits of code content.

If a code is lead through the reading field, the code content is decoded and passed to the master via the **multiNet**.

***Notice!***

*The configuration of the device can be changed or the functions can be tested via the USB service interface. To do this, connecting the supply voltage to the device and establishing a USB connection between the BCL and PC is sufficient.*

*At www.leuze.com, you can find a USB driver for **webConfig** under **Download -> identify -> Stationary bar code readers** BCL 300i \ BCL 301i. Install this USB driver and please follow the instructions when doing so. Then, you can open the connection to the BCL through your Internet browser and perform the desired settings or tests.*

## 3.6 Bar code reading

To test, you can use the following bar code in the 2/5 Interleaved format. The bar code module here is 0.5:

Modul 0,5

6677889900

Provided your BCL 300*i* \ BCL 301*i* model has a display, the read information appears on this display. The **PWR** LED goes off briefly and then turns green again. Simultaneously, the read information is forwarded to the superior system (PLC/PC).

Please check the incoming data of the bar code information there.

Alternatively, you can use a switching input for read activation (switching signal of a photoelectric sensor or 24 V DC switching signal).

# 4 Device description

## 4.1 About the bar code readers of the BCL 300*i* series

Bar code readers of the BCL 300*i* series are high-speed scanners with integrated decoder for all commonly used bar codes, e.g. 2/5 Interleaved, Code 39, Code 128, EAN 8/13 etc., as well as codes from the GS1 DataBar family.

Bar code readers of the BCL 300*i* series are available in various optics models as well as line scanners, line scanners with deflection mirrors, oscillating mirrors and also optionally as heated models.

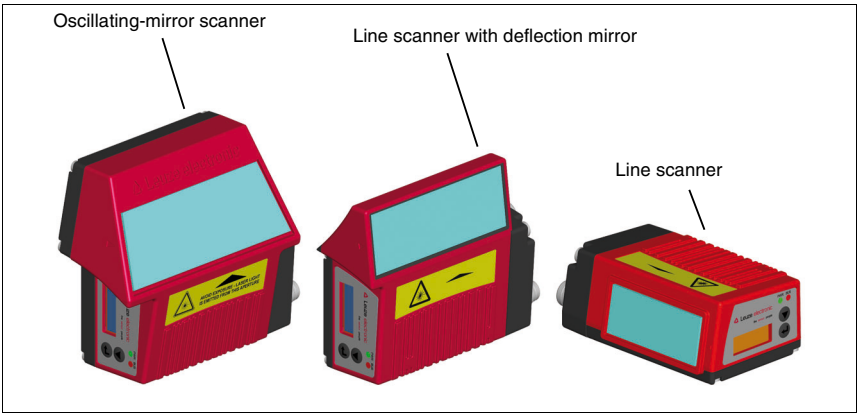


Figure 4.1: Line scanner, line scanner with deflection mirror and oscillating-mirror scanner

The extensive options for device configuration enable adaptation to a multitude of reading tasks. Due to the large reading distance combined with the great depth of field, a large opening angle and a very compact construction, the device is ideally suited for the conveyor and storage technology market.

The interfaces (**RS 232**, **RS 485** and **RS 422**) integrated in the various device models and the fieldbus systems (**PROFIBUS DP**, **PROFINET-IO** and **Ethernet**) offer optimum connection to the superior host system.

## 4.2 Characteristics of the bar code readers of the BCL 300*i* series

Performance characteristics:

- Integrated fieldbus connectivity = *i* -> Plug-and-Play fieldbus coupling and easy networking
- Numerous interface variants facilitate connection to the superior systems
  - RS 232, RS 422
  - RS 485 and multiNet plus slave

  alternatively, various fieldbus systems, such as
  - PROFIBUS DP
  - PROFINET-IO
  - EtherNet
- Integrated code fragment technology (**CRT**) enables the identification of soiled or damaged bar codes
- Maximum depth of field and reading distances from 30 mm to 700 mm
- Large optical opening angle and, thus, large reading field width
- High scanning rate of 1000 scans/s for fast reading tasks
- On request with display to easily detect and activate functions and status messages.
- Integrated USB service interface, Mini-B type
- Adjustment of all device parameters with a web browser
- Easy alignment- and diagnostics functions
- Up to four possible connection technologies
- Two freely programmable switching inputs/outputs for the activation or signaling of states
- Automatic monitoring of the read quality with **autoControl**
- Automatic recognition and setting of the bar code type using **autoConfig**
- Reference code comparison
- Optional heating models to -35 °C
- Heavy-duty housing of protection class IP 65

***Notice!***

*Information on technical data and characteristics can be found in Kapitel 5.*

### *General information*

The integrated fieldbus connectivity = *i* contained in the bar code readers of the BCL 300*i* series facilitates the use of identification systems which function without connector unit or gateways. The integrated fieldbus interface considerably simplifies handling. The Plug-and-Play concept enables easy networking and very simple commissioning: Directly connect the respective fieldbus and all configuration is performed with no additional software.

For decoding bar codes, the bar code readers of the BCL 300*i* series make available the proven **CRT decoder** with code fragment technology:

The proven code fragment technology (**CRT**) enables bar code readers of the BCL 300*i* series to read bar codes with a small bar height, as well as bar codes with a damaged or soiled print image.

With the aid of the **CRT decoder**, bar codes can also be read without problem in other demanding situations, such as with a large tilt angle (azimuth angle or even twist angle).

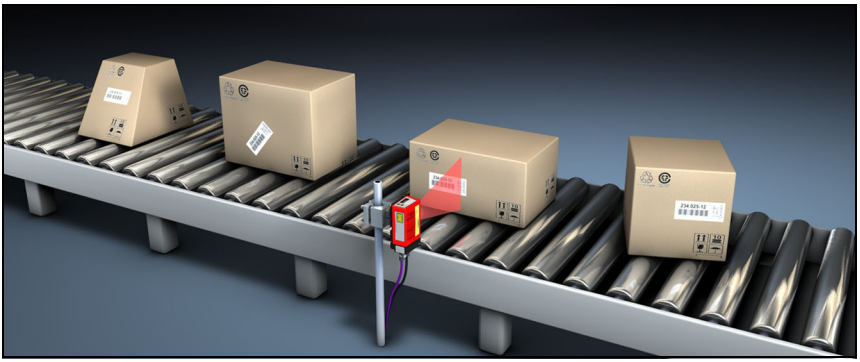

Figure 4.2: Possible bar code orientation

The BCL 300*i* \ BCL 301*i* can be operated and configured using the integrated webConfig tool via the USB service interface; alternatively, the bar code readers can be adjusted using configuration commands via the host/service interface.

The BCL 300*i* \ BCL 301*i* needs a suitable activation to start a read process as soon as an object is in the reading field. This opens a time window ("reading gate") in the BCL 300*i* \ BCL 301*i* for the read process during which the bar code reader has time to detect and decode a bar code.

In the basic setting, triggering takes place through an external reading cycle signal. Alternative activation options include online commands via the host interface and the **autoReflAct** function.

Through the read operation, the BCL 300*i* \ BCL 301*i* collects additional useful pieces of data for diagnosis which can also be transmitted to the host. The quality of the read operation can be inspected using the **alignment mode** which is integrated in the webConfig tool.

An optional display in English with buttons is used to operate the BCL 300*i* \ BCL 301*i* as well as for visualization purposes. Two LEDs provide additional optical information on the current operating state of the device.

The two freely configurable switching inputs/outputs **SWIO1** and **SWIO2** can be assigned various functions and control e.g. activation of the BCL 300*i* \ BCL 301*i* or external devices, such as a PLC.

System, warning and error messages provide assistance in setup/troubleshooting during commissioning and read operation.

## 4.3 Device construction

***BCL 300i \ BCL 301i bar code readers***

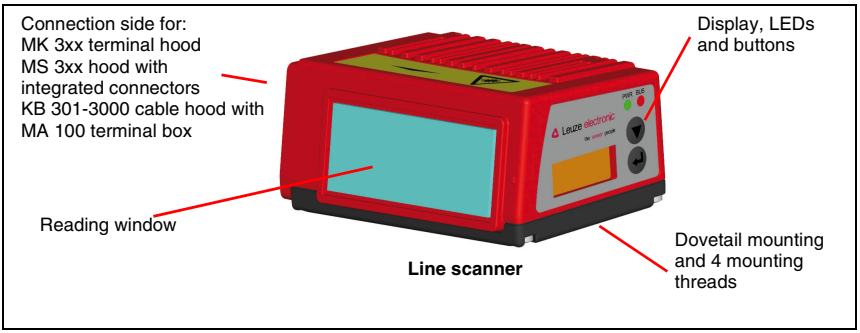


Figure 4.3: BCL 300*i* \ BCL 301*i* device construction - line scanner

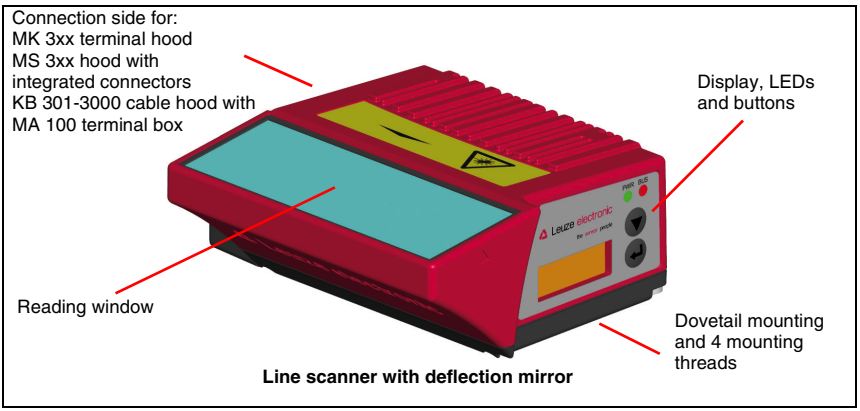


Figure 4.4: BCL 300*i* \ BCL 301*i* device construction -line scanner with deflection mirror

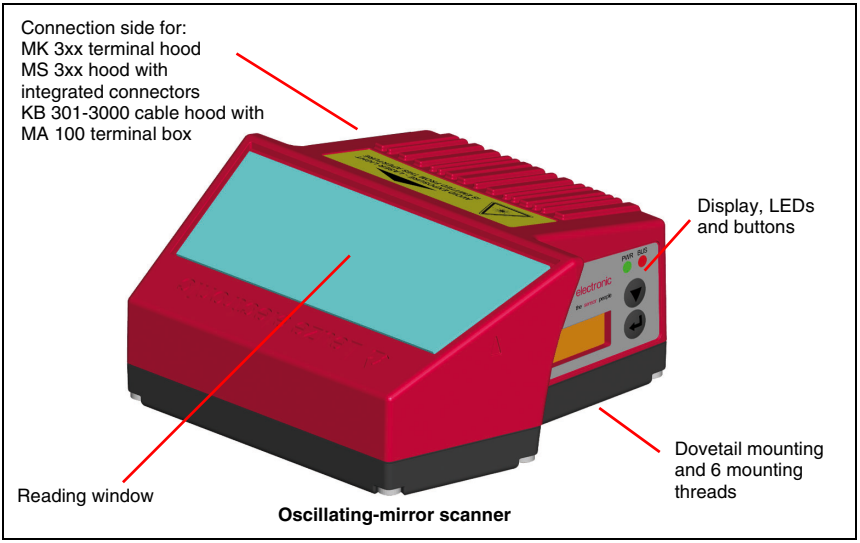


Figure 4.5: BCL 300*i* \ BCL 301*i* device construction - oscillating-mirror scanner

### *MS 300/MS 301 hood with integrated connectors with parameter memory*

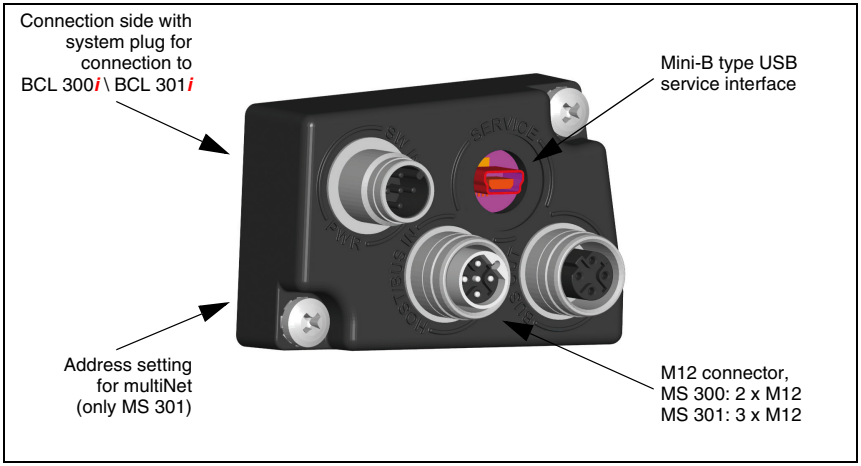


Figure 4.6: Device construction MS 300/MS 301 hood with integrated connectors

### *MK 300/MK 301 terminal hood with parameter memory*

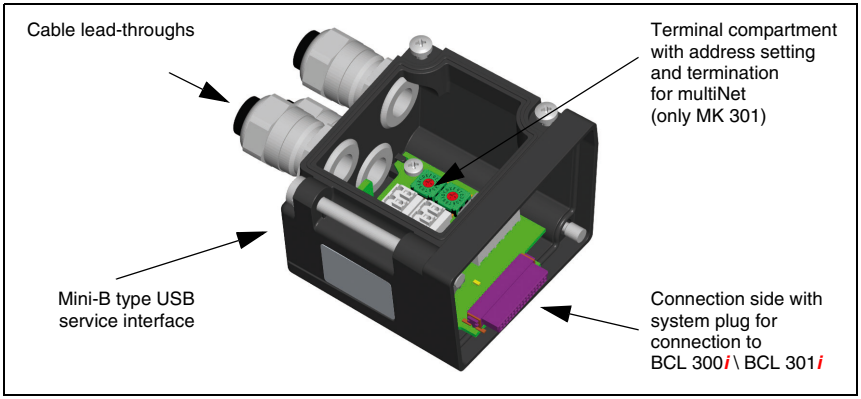


Figure 4.7: Device construction MK 300/MK 301 hood with integrated connectors

### *KB 301/3000 cable hood with 3m cable*

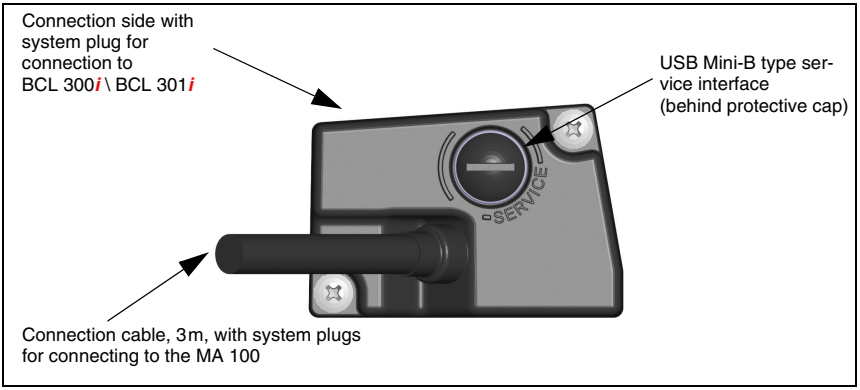


Figure 4.8: KB 301/3000 cable hood device construction

### *MA 100 terminal box*

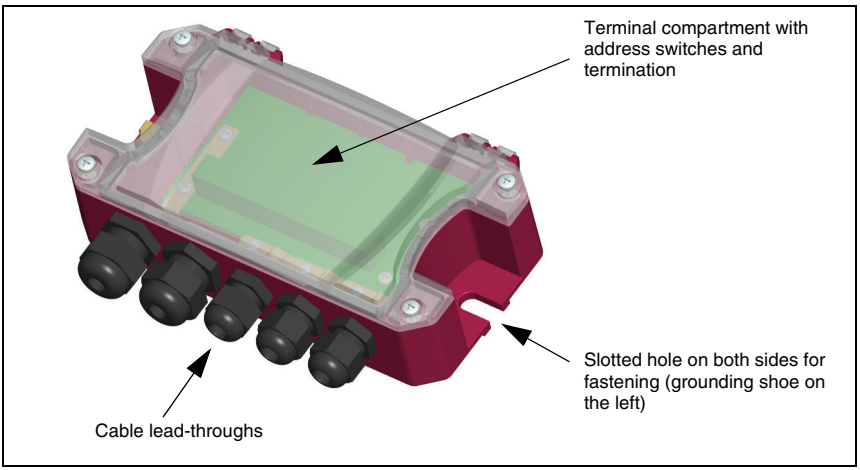


Figure 4.9: MA 100 terminal box device construction

## 4.4 Reading techniques

### 4.4.1 Line scanner (single line)

A line (scan line) scans the label. Due to the opt. opening angle, the reading field width is dependent on the read distance. Through the movement of the object, the entire bar code is automatically transported through the scan line.

The integrated code fragment technology permits twisting of the bar code (tilt angle) within certain limits. These are dependent on the transport speed, the scanning rate of the scanner and the bar code properties.

#### *Areas of application of the line scanner*

The line scanner is used:

- when the bars of the bar code are printed in the conveying direction ('ladder arrangement').
- with bar codes having very short bar lengths.
- when the ladder code is turned out of the vertical position (tilt angle).
- when the reading distance is large.

Figure 4.10: Deflection principle for the line scanner

### 4.4.2 Line scanner with oscillating mirror

The oscillating mirror deflects the scan line additionally to both sides across the scan direction at a randomly adjustable oscillation frequency. In this way, the BCL 300*i* \ BCL 301*i* can also scan larger areas or spaces for bar codes. The reading field height (and the scan line length useful for evaluation) depends on the reading distance due to the optical opening angle of the oscillating mirror.

#### *Areas of application of the line scanner with oscillating mirror*

For line scanners with oscillating mirror, oscillation frequency, start/stop position etc. are adjustable. It is used:

- when the position of the label is not fixed, e.g. on pallets – various labels can, thus, be detected at various positions.
- when the bars of the bar code are printed perpendicular to the conveying direction ('picket fence arrangement').
- when reading stationary objects.
- when a large reading field (reading window) has to be covered.

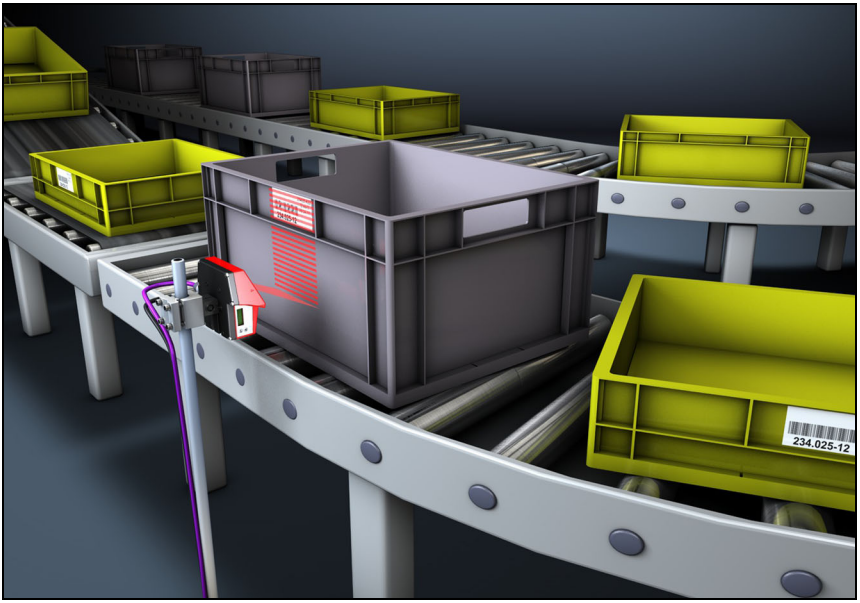


Figure 4.11: Deflection principle for the line scanner with oscillating mirror add-on

### 4.4.3 Raster scanner (Raster Line)

Multiple scan lines scan the label. Due to the optical opening angle, the reading field width is dependent on the reading distance. Provided the code is located in the reading field, it can be read during standstill. If the code moves through the reading field, it is scanned by multiple scan lines.

The integrated code fragment technology permits twisting of the bar code (tilt angle) within certain limits. These are dependent on the transport speed, the scanning rate of the scanner and the bar code properties. In most cases, everywhere a line scanner is used, a raster scanner can be used.

***Areas of application of the raster scanner:***

The raster scanner is used:

- when the bars of the bar code are perpendicular to the conveying direction ('picket fence arrangement')
- with bar codes with low height displacement
- with very glossy bar codes

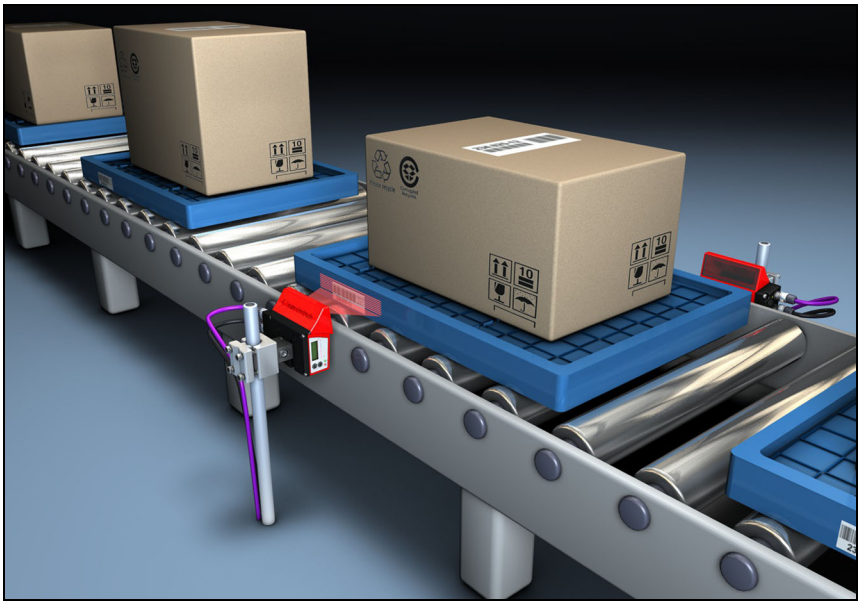

Figure 4.12: Deflection principle for the raster scanner

## 4.5 Standalone connectionBCL 300*i*

The BCL 300*i* bar code reader is operated as a "standalone" single device.

For the electrical connection of the supply voltage, the interface and the switching inputs/ outputs, either the MS 300 hood with integrated connectors, the MK 300 terminal hood or the KB 301-3000 cable hood together with the MA 100 terminal box are available.

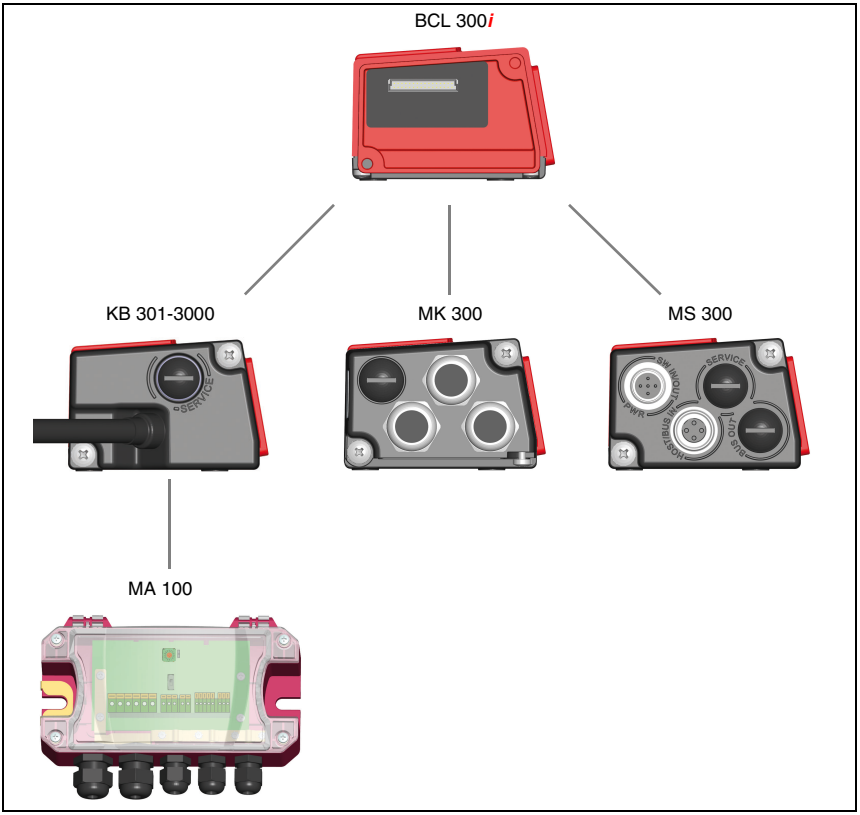


Figure 4.13: Standalone connectionBCL 300*i*

## 4.6 Networking - Leuze multiNet plusBCL 301*i*

In the Leuze **multiNet plus** network, up to 32 BCL 301*i* bar code readers can be networked together. The respective network devices transmit the read data when requested to by the MA 31 or BCL 500**i** network master. For this purpose, each BCL 301*i* is assigned its own station address, which is set using the address switch in the MS 301, MK 301 or MA 100.

The master then transmits the data of all network devices via its host interface to a superior PLC control system or a computer, i.e. it "collects" the scanner data in the network and transmits it to an interface on the host computer. This reduces interface costs (CPs) and time spent programming the software.

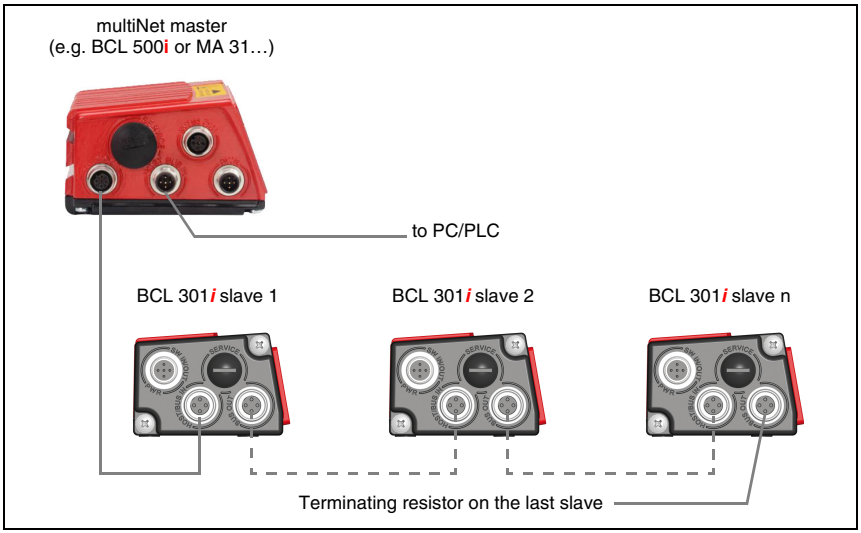


Figure 4.14: Networking possibilities using the multiNet plus

### *Two-wire RS 485*

The **Leuze multiNet plus** is optimized for fast transmission of scanner data to a superior host computer. The multiNet plus consists physically of a two-wire RS 485 interface through which the **Leuze multiNet plus software protocol** is controlled. This makes wiring the network easy and inexpensive as slaves are looped through to one another in parallel.

In principle, networking occurs via a parallel connection of the individual RS 485 interfaces of the respective bar code scanners. Shielded, twisted pair conductors should be used for the **Leuze multiNet plus**. This allows a total network length of up to 1200 m.

## 4.7 Leuze multiScan

The **multiScan** operating mode is based on **Leuze multiNet plus** and links individual bar code readings from multiple bar code scanners into a single decoding result. This is used, for example, on a packet conveyor system on which the label can be affixed on either the right or left side, thereby requiring two read stations. To prevent the host from having to always process two readings for a single packet, i.e. a decoding result and a No Read, a multiScan arrangement is used which transmits only one reading from the two read stations to the host; this single reading is transmitted by the multiScan master.

***Notice!***

*Thus, from the perspective of the host, the scanner network appears to be just a single bar code reader!*

For this purpose one **multiScan** master and one or more **multiScan** slaves are connected together via the RS 485 interface.

***Notice!***

*The MA 31 or the BCL 500i is available as a multiNet master.*

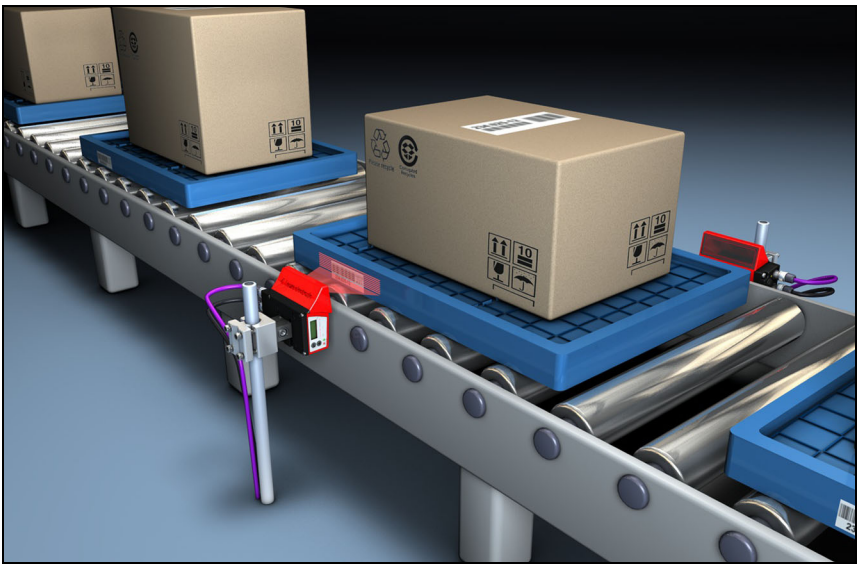

Figure 4.15: Scanner arrangement with the **multiScan** function

***Notice!***

*The **multiScan** function on the RS 485 interface is possible for minimum of 2 and a maximum of 32 devices!*

The protocol set on the RS 485 interface is the multiNet protocol. As a result, during **multiScan** operation on the RS 485 interface, the multiNet master also functions as the **multiScan** master and the multiNet slaves function as **multiScan** slaves (thus, all multiNet slave are included in **multiScan** operation).

## 4.8 Heater

For low-temperature applications to min. -35°C (e.g. in cold storage), the bar code readers of the BCL 300*i* \ BCL 301*i* series can optionally be permanently fitted with a built-in heating and these bar code readers purchased as separate device models.

## 4.9 External parameter memory

If the BCL 300*i* \ BCL 301*i* is used together with an MS 300/MS 301 hood with integrated connectors or MK 300/MK 301 terminal hood, the device settings are also saved in an external parameter memory in the hood with integrated connectors or terminal hood.

If the BCL is replaced with a new device, the new device takes on the settings of the old BCL from the hood with integrated connectors or terminal hood. This makes renewed configuration of the BCL unnecessary when it is replaced.

## 4.10 autoReflAct

**AutoReflAct** stands for **Auto**matic **Refl**ector **Act**ivation and permits an activation without additional sensors. This is achieved by directing the scanner with reduced scanning beam towards a reflector mounted behind the conveyor path.

***Notice!***

*Compatible reflectors are available on request.*

As long as the scanner is targeted at the reflector, the reading gate remains closed. If, however, the reflector is blocked by an object such as a container with a bar code label, the scanner activates the read procedure, and the label on the container is read. When the path from the scanner to the reflector has cleared, the read procedure has completed and the scanning beam is reduced and again directed onto the reflector. The reading gate is closed.

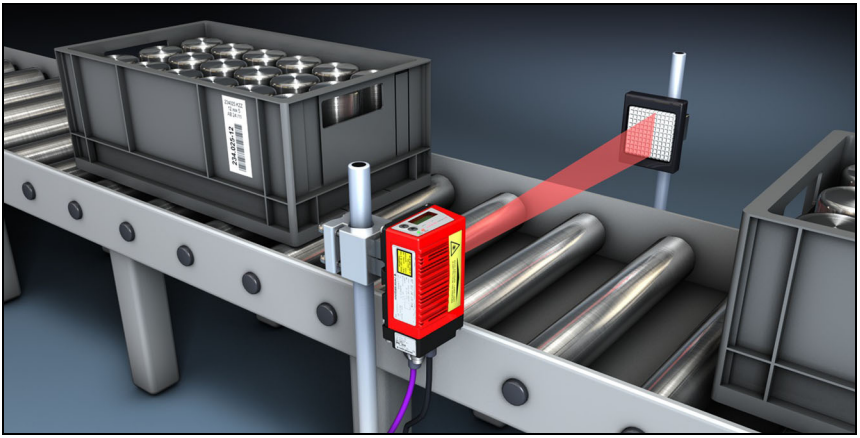

Figure 4.16: Reflector arrangement for autoReflAct

The **autoReflAct** function uses the scanning beam to simulate a photoelectric sensor and thus permits an activation without additional sensor system.

## 4.11 Reference codes

The BCL 300*i* \ BCL 301*i* offers the possibility of storing one or two reference codes.

It is possible to store the reference codes by means of teach-in (via SWIO_1 or SWIO_2), via the webConfig tool or via online commands.

The BCL 300*i* \ BCL 301*i* can compare read bar codes with one and/or both reference codes and execute user-configurable functions depending on the comparison result.

## 4.12 autoConfig

With the autoConfig function, the BCL 300*i* \ BCL 301*i* offers the user who only wishes to simultaneously read one code type (symbology) with one number of digits an extremely simple and convenient configuration option.

After starting the autoConfig function via the switching input or from a superior control, it is sufficient to position a bar code label with the desired code type and number of digits in the reading field of the BCL 300*i* \ BCL 301*i*.

Afterward, bar codes with the same code type and number of digits are recognized and decoded.

# 5 Specifications

## 5.1 General specifications of the bar code readers

### 5.1.1 Line scanner / raster scanner

| Type | BCL 300*i*<br>Stand-alone | BCL 301*i*<br>multiNet plus slave |
|---|---|---|
| **Type** | **Line scanner without heating** | |
| **Optical data** | | |
| Light source | Laser diode λ = 655 nm (red light) | |
| Beam exit | Front | |
| Scanning rate | 1000 scans/s | |
| Beam deflection | bB means of rotating polygon wheel | |
| Useful opening angle | max. 60° | |
| Optics models / resolution | High Density (**N**): 0.127 … 0.20 mm<br>Medium Density (**M**): 0.20 … 0.5 mm<br>Low Density (**F**): 0.30 … 0.5 mm<br>Ultra Low Density (**L**): 0.35 … 0.8 mm | |
| Reading distance | see reading field curves | |
| Laser class | 2 (acc. to EN 60825-1 and 21 CFR 1040.10 with Laser Notice No. 50) | |
| **Bar code data** | | |
| Code types | 2/5 Interleaved, Code 39, Code 128, EAN 128, EAN / UPC,<br>Codabar, Code 93, GS1 DataBar, EAN Addendum | |
| Bar code contrast (PCS) | >= 60 % | |
| External light tolerance | 2000 lx (on the bar code) | |
| Number of bar codes per scan | 3 | |
| **Electrical data** | | |
| Interface type | 1x RS 232/422 | 1x RS 485 |
| Protocols | Leuze Standard | Leuze Standard, Leuze multiNet plus |
| Baud rate | 4800 … 115200 Baud | |
| Data formats | Data bits: 7.8<br>Parity: None, Even, Odd<br>Stop bits: 1.2 | |
| Service interface | Mini-B type USB 2.0 socket | |
| Switching input /<br>Switching output | 2 switching inputs/outputs, freely programmable functions<br>- Switching input: 18 … 30 VDC depending on supply voltage, I max. = 8 mA<br>- Switching output: 18 … 30 VDC, depending on supply voltage, I max. = 60 mA<br>(short-circuit proof)<br>Switching inputs/outputs protected against polarity reversal! | |
| Operating voltage | 18 … 30 VDC (Class 2, safety class III) | |
| Power consumption | max. 2.5 W | |
| **Operating and display elements** | | |
| Display (optional) | Monochromatic graphical display, 128 x 32 pixel, with background lighting | |
| Keyboard (optional) | 2 buttons | |
| LEDs | 2 LEDs for power (PWR) and bus state (BUS), two-colored (red/green) | |

Table 5.1: Specifications of the BCL 301*i* and BCL 300*i* line/raster scanners without heating

| Type | BCL 300*i*<br>Stand-alone | BCL 301*i*<br>multiNet plus slave |
|---|---|---|
| **Type** | **Line scanner without heating** | |
| **Mechanical data** | | |
| Protection class | IP 65 [1] | |
| Weight | 270 g (without connection hood) | |
| Dimensions (WxHxD) | 44 x 95 x 68 mm (without connection hood) | |
| Housing | Diecast aluminum | |
| **Environmental data** | | |
| Operating temperature range | 0 °C … +40 °C | |
| Storage temperature range | -20 °C … +70 °C | |
| Air humidity | Max. 90% rel. humidity, non-condensing | |
| Vibration | IEC 60068-2-6, test FC | |
| Shock | IEC 60068-2-27, test Ea | |
| Continuous shock | IEC 60068-2-29, test Eb | |
| Electromagnetic compatibility | EN 55022;<br>IEC 61000-6-2 (contains IEC 61000-4-2, -3, -4, -5 and -6) [2] | |

Table 5.1: Specifications of the BCL 301*i* and BCL 300*i* line/raster scanners without heating

1) Only with the MS 300/MS 301, MK 300/MK 301 or KB 301-3000 connection hood and screwed-on M12 connector or cable lead-throughs and mounted caps. Minimum tightening torque of the housing connection screws on the connection hood 1.4 Nm!

2) This is a Class A product. In a domestic environment this product may cause radio interference, in which case the operator may be required to take adequate measures.

***Attention!***

*For UL applications, use is permitted exclusively in Class 2 circuits according to NEC (National Electric Code).*

*The BCL 300i \ BCL 301i bar code readers are designed in accordance with safety class III for supply by PELV (protective extra-low voltage).*

### 5.1.2 Oscillating-mirror scanner

Technical data same as for line scanner without heating with the following differences:

| Type | BCL 300*i*<br>Stand-alone | BCL 301*i*<br>multiNet plus slave |
|---|---|---|
| **Type** | **Oscillating-mirror scanner without heating** | |
| **Optical data** | | |
| Beam exit | Lateral zero position at an angle of 90° | |
| Beam deflection | Via rotating polygon wheel (horizontal) and stepping motor with mirror (vertical) | |
| Oscillation frequency | 0 … 10 Hz<br>(adjustable, max. frequency is dependent on set swivel angle) | |
| Max. swivel angle | ±20° (adjustable) | |
| Reading field height | See reading field curves | |
| **Electrical data** | | |
| Power consumption | max. 4 W | |
| **Mechanical data** | | |
| Weight | 580 g (without connection hood) | |
| Dimensions (WxHxD) | 58 x 125 x 110 mm (without connection hood) | |

Table 5.2: Specifications of the BCL 301*i* and BCL 300*i* oscillating-mirror scanners without heating

### 5.1.3 Line scanner / raster scanner with deflection mirror

Technical data same as for line scanner without heating with the following differences:

| Type | BCL 300*i*<br>Stand-alone | BCL 301*i*<br>multiNet plus slave |
|---|---|---|
| **Type** | **Line scanner with deflection mirror without heating** | |
| **Optical data** | | |
| Beam exit | Lateral zero position at an angle of 105° | |
| Beam deflection | Via rotating polygon wheel (horizontal) and deflection mirror (vertical) | |
| **Electrical data** | | |
| Power consumption | Max. 2.5 W | |
| **Mechanical data** | | |
| Weight | 350 g (without connection hood) | |
| Dimensions (WxHxD) | 44 x 103 x 96 mm (without connection hood) | |

Table 5.3: Specifications of the BCL 301*i* and BCL 300*i* deflection-mirror scanners without heating

## 5.2 Heating models of the bar code readers

The BCL 300*i* \ BCL 301*i* bar code readers are optionally available as models with integrated heating. In this case, heating is permanently installed ex works. Self-installation on-site by the user is not possible!

### *Features*

- Integrated heating (permanently installed)
- Extends the application range of the BCL 300*i* \ BCL 301*i* to -35°C
- Supply voltage 24VDC ±20%
- BCL 300*i* \ BCL 301*i* enabling through an internal temperature switch (switch-on delay about 30min for 24VDC and minimum ambient temperature of -35°C)
- Necessary conductor cross-section for the voltage supply: at least 0.75mm²; the use of ready-made cables is, thus, not possible

### *Construction*

The heating consists of two parts:

- The front cover heater
- The housing heater

### *Function*

When the 24VDC supply voltage is applied to the BCL 300*i* \ BCL 301*i*, a temperature switch initially only connects the heating to current (front cover heater and housing heater). During the heating phase (around 30min), when the inside temperature rises above 15°C, the temperature switch connects the BCL 300*i* \ BCL 301*i* to the supply voltage. This is followed by the self test and the changeover to read operation. The "**PWR**" LED lights up, showing overall readiness for operation.

When the inside temperature reaches approximately 18 °C, another temperature switch turns the housing heater off and, if necessary, back on again (if the inside temperature drops below 15°C). This does not interrupt the read operation. The front cover heater remains activated until an inside temperature of 25°C is reached. At temperatures above this, the front cover heater switches off and, with a switching hysteresis of 3°C, back on again at an inside temperature below 22°C.

### *Mounting location*

***Notice!***

*The mounting location is to be selected such that it does not expose the BCL 300i \ BCL 301i with heating directly to a cold air stream. To achieve an optimal heating effect, the BCL 300i \ BCL 301i should be mounted so that it is thermally isolated.*

### *Electrical connection*

The required core cross section of the connection cable for the voltage supply must be at least 0.75 mm².

***Attention!***

*The voltage supply must not be looped through from one device to the next.*

***Attention!***

*The **BCL 300i** \ BCL 301**i** **with oscillating mirror and heating must not be connected to the MA 100**!*

***Power consumption***

The energy requirement depends on the model:

- the line/raster scanner with heating typically consumes a maximum of 17W power.
- the line scanner with oscillating mirror and heating typically consumes a maximum of 26W power.
- the line/raster scanner with deflection mirror and heating typically consumes a maximum of 19W power.

These values are based on operation with unconnected switching outputs.

### 5.2.1 Line scanner / raster scanner with heater

Technical data same as for line scanner without heating with the following differences:

| **Type** | **BCL 300*i***<br>Stand-alone | **BCL 301*i***<br>multiNet plus slave |
|---|---|---|
| **Type** | **Line scanner with heater** | |
| **Electrical data** | | |
| Operating voltage | 24VDC ±20% | |
| Power consumption | max. 17W | |
| Structure of the heating | Housing heating and separate heating of the optics glass | |
| Warmup time | Min. 30min at +24VDC and an ambient temperature of -35°C | |
| Min. conductor cross section | Conductor cross section of at least 0.75mm² for the supply voltage supply line.<br>Wiring through of the voltage supply to multiple heating devices is **not** permissible.<br>Standard, M12 ready-made cable **not** usable<br>(insufficient cable cross-section) | |
| **Environmental data** | | |
| Operating temperature range | -35°C … +40°C | |
| Storage temperature range | -20°C … +70°C | |

Table 5.4: Specifications of the BCL 301*i* and BCL 300*i* line/raster scanners with heating

### 5.2.2 Oscillating-mirror scanner with heating

Technical data same as for line scanner without heating with the following differences:

| Type | BCL 300*i*<br>Stand-alone | BCL 301*i*<br>multiNet plus slave |
|---|---|---|
| **Type** | **Oscillating-mirror scanner with heating** | |
| **Optical data** | | |
| Useful opening angle | Max. 60° | |
| Max. swivel angle | ± 20°(adjustable) | |
| **Electrical data** | | |
| Operating voltage | 24VDC ±20% | |
| Power consumption | Max. 26W | |
| Structure of the heating | Housing heating and separate heating of the optics glass | |
| Warmup time | Min. 30min at +24VDC and an ambient temperature of -35°C | |
| Min. conductor cross section | Conductor cross section of at least 0.75mm² for the supply voltage supply line.<br>Wiring through of the voltage supply to multiple heating devices is **not** permissible.<br>Standard, M12 ready-made cable **not** usable<br>(insufficient cable cross-section) | |
| **Environmental data** | | |
| Operating temperature range | -35°C … +40°C | |
| Storage temperature range | -20°C … +70°C | |

Table 5.5: Specifications of the BCL 301*i* and BCL 300*i* oscillating-mirror scanners with heating

### 5.2.3 Line scanner / raster scanner with deflection mirror and heating

Technical data same as for line scanner without heating with the following differences:

| Type | BCL 300*i*<br>Stand-alone | BCL 301*i*<br>multiNet plus slave |
|---|---|---|
| **Type** | **Deflection mirror scanner with heating** | |
| **Optical data** | | |
| Useful opening angle | Max. 60° | |
| **Electrical data** | | |
| Operating voltage | 24VDC ±20% | |
| Power consumption | Max. 19W | |
| Structure of the heating | Housing heating and separate heating of the optics glass | |
| Warmup time | Min. 30min at +24VDC and an ambient temperature of -35°C | |
| Min. conductor cross section | Conductor cross section of at least 0.75mm² for the supply voltage supply line.<br>Wiring through of the voltage supply to multiple heating devices is **not** permissible.<br>Standard, M12 ready-made cable **not** usable<br>(insufficient cable cross-section) | |
| **Environmental data** | | |
| Operating temperature range | -35°C … +40°C | |
| Storage temperature range | -20°C … +70°C | |

Table 5.6: Specifications of the BCL 301*i* and BCL 300*i* deflection-mirror scanners with heating

## 5.3 Dimensioned drawings

### 5.3.1 Dimensioned drawing of complete overview of the BCL 300*i* \ BCL 301*i* with MS 3xx / MK 3xx

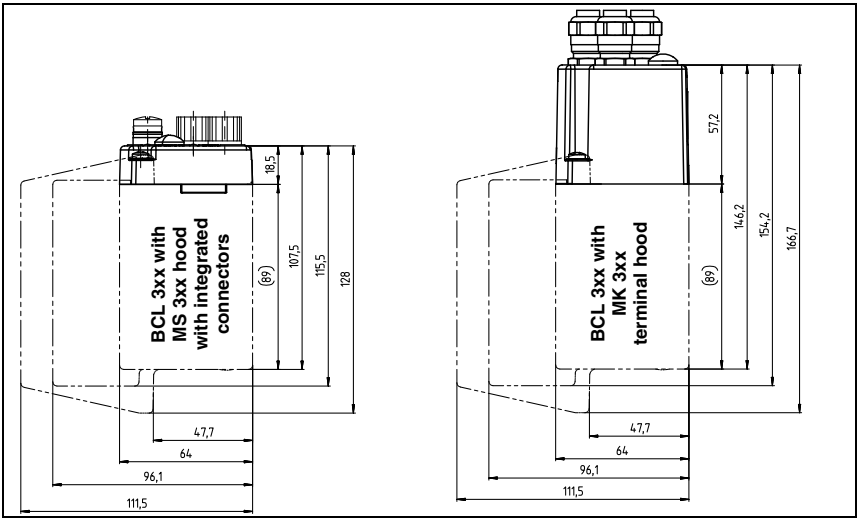


Figure 5.1: Dimensioned drawing of complete overview of the BCL 300*i* \ BCL 301*i* with MS 3xx / MK 3xx

### 5.3.2 Dimensioned drawing of complete overview of the BCL 300*i* \ BCL 301*i* with KB 301-3000

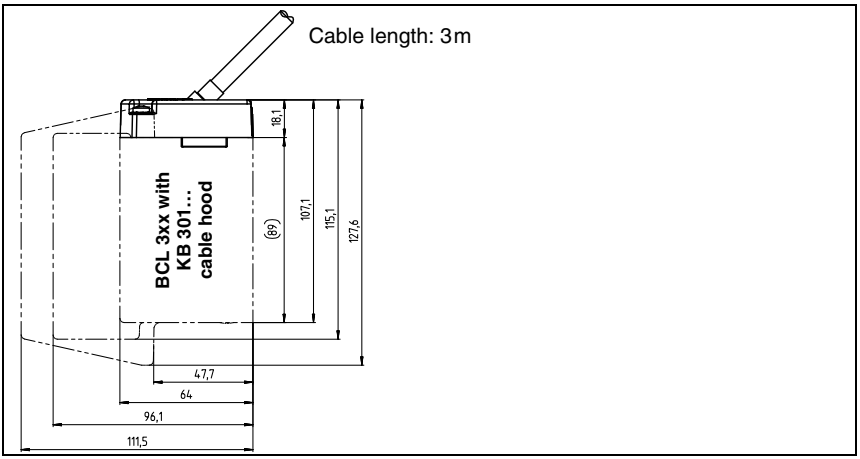


Figure 5.2: Dimensioned drawing of complete overview of the BCL 300*i* \ BCL 301*i* with KB 301-3000

### 5.3.3 Dimensioned drawing of line scanner with / without heating

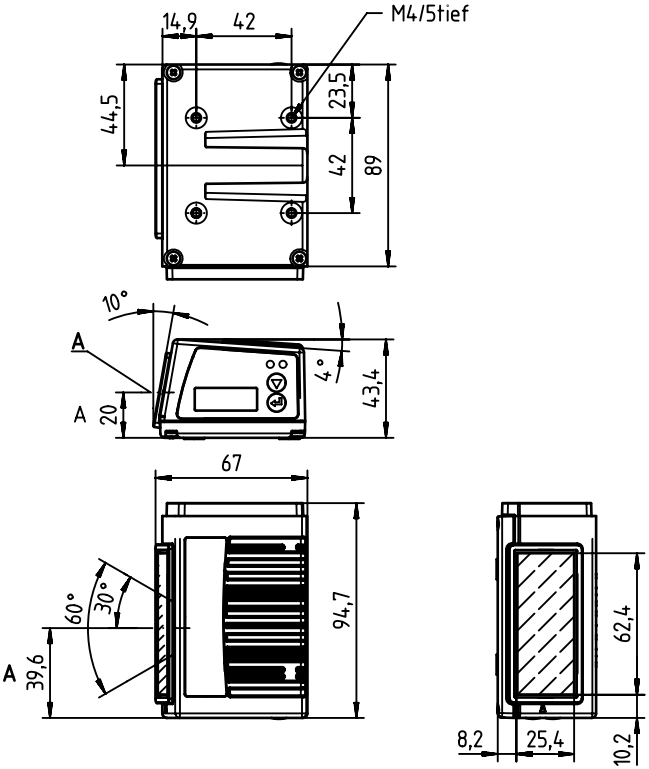


**A** Optical axis

Figure 5.3: Dimensioned drawing BCL 300*i* \ BCL 301*i* line scanner S…102

### 5.3.4 Dimensioned drawing of deflection mirror scanner with / without heating

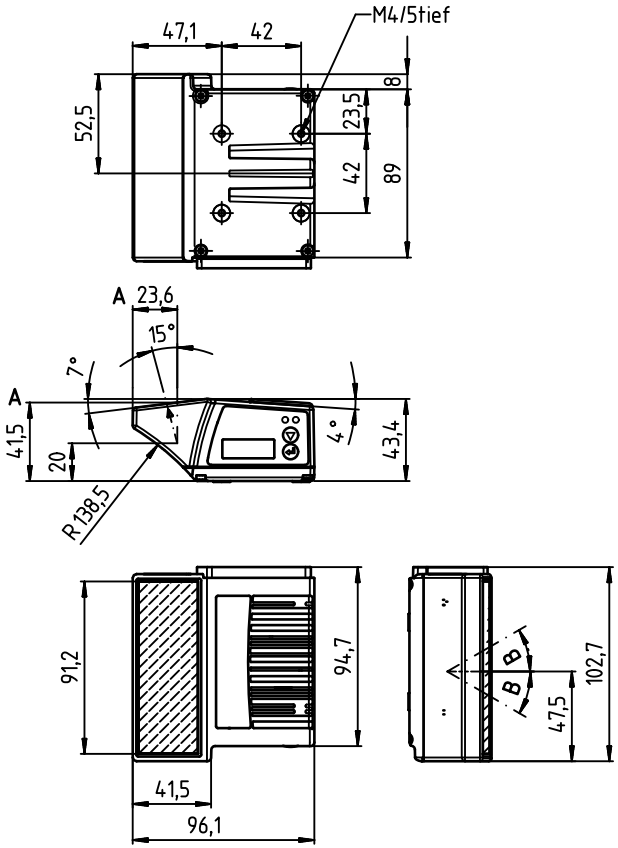


**A** Optical axis
**B** Deflection angle of the laser beam: ± 30°

Figure 5.4: Dimensioned drawing BCL 300*i* \ BCL 301*i* deflection mirror scanner S…100

### 5.3.5 Dimensioned drawing of oscillating-mirror scanner with / without heating

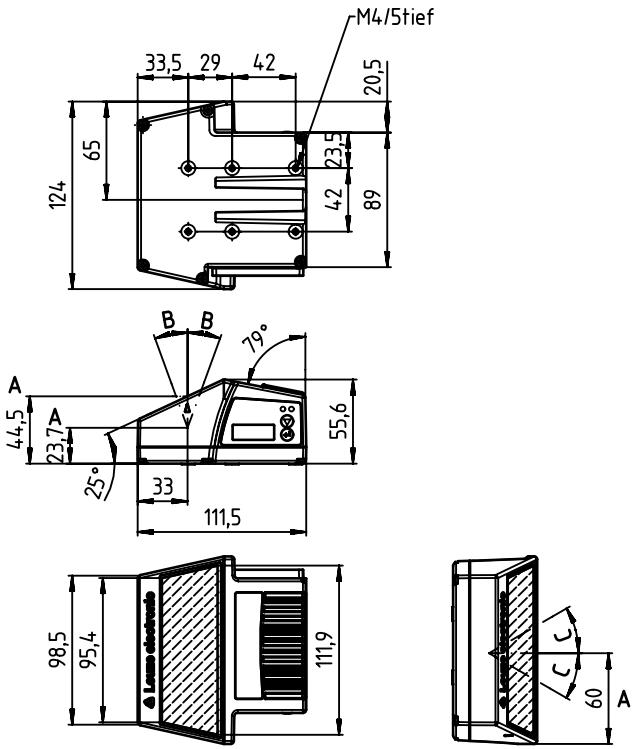


**A** Optical axis
**B** Swivel angle of the laser beam: ± 20°
**C** Deflection angle of the laser beam: ± 30°

Figure 5.5: Dimensioned drawing BCL 300*i* \ BCL 301*i* oscillating mirror scanner O…100

### 5.3.6 Dimensioned drawing of MS 3xx hood with integrated connectors / MK 3xx terminal hood

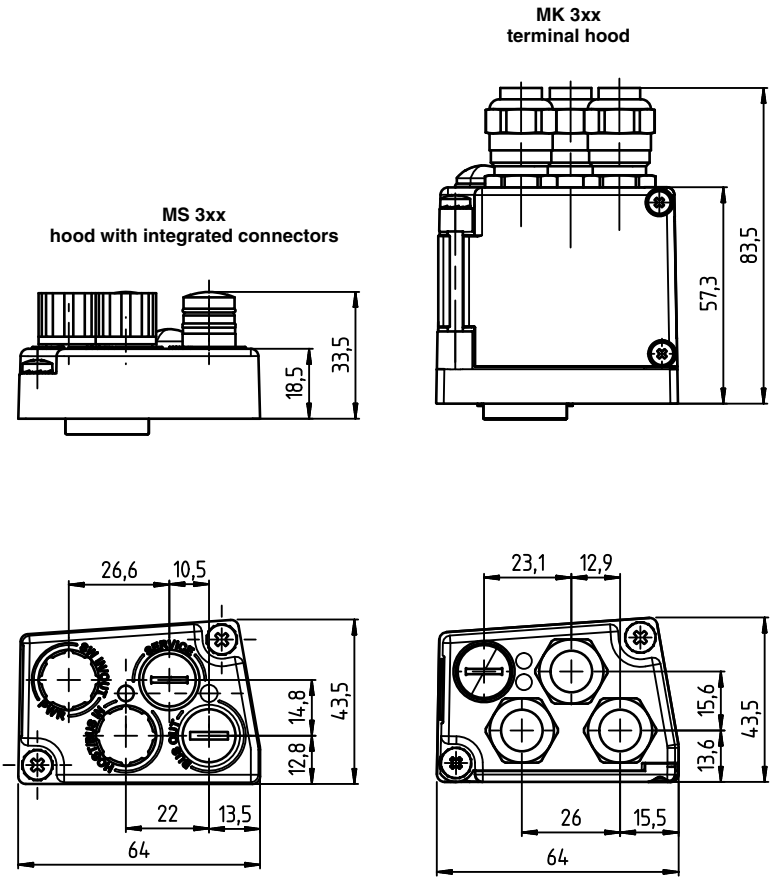


***Attention!***

*To ensure protection class IP 65 is fulfilled, the screws of the connection hood are tightened with a tightening torque of 1.4Nm for connecting to the BCL.*

Figure 5.6: Dimensioned drawing of MS 3xx hood with integrated connectors / MK 3xx terminal hood

### 5.3.7 Dimensioned drawing of KB 301-3000 cable hood

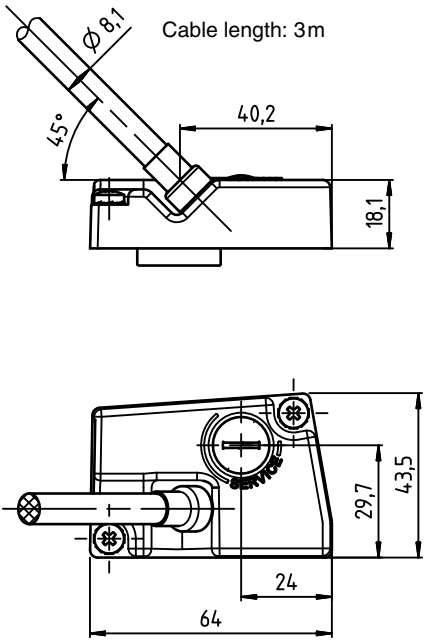


***Attention!***

*To ensure protection class IP 65 is fulfilled, the screws of the connection hood are tightened with a tightening torque of 1.4Nm for connecting to the BCL.*

Figure 5.7: Dimensioned drawing of KB 301-3000 cable hood

### 5.3.8 Dimensioned drawing of MA 100 terminal box

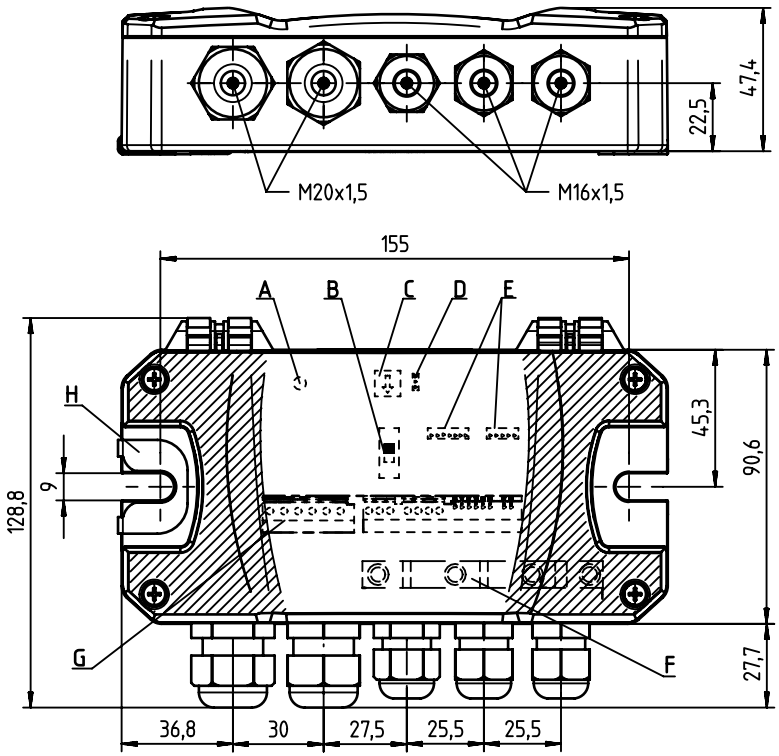


**A** Green indicator diode (SW I/O)
**B** S2 switch, termination ON/OFF
**C** S1 switch, address setting via multiNet
**D** JP8 jumper, address range 0 … 15 / 16 … 31
**E** BCL connection
**F** Shielding connection
**G** Terminal strip for the electrical connection
**H** Contact surface for FE

Figure 5.8: Dimensioned drawing of MA 100 terminal box

## 5.4 Reading field curves / optical data

### 5.4.1 Bar code characteristics

***Notice!***

*Please note that the size of the bar code module influences the maximum reading distance and the width of the reading field. Therefore, when selecting a mounting location and/or the bar code label, take into account the different reading characteristics of the scanner with various bar code modules.*

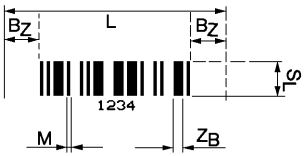


M = Module: The narrowest line or space of a bar code in mm.

$Z_B$ = Wide character: Wide bars and gaps are a multiple (ratio) of the module.
Module x Ratio = $Z_B$ (Normal Ratio 1 : 2.5).

$B_Z$ = Quiet zone: The quiet zone should be at least 10 times the module, but not less than 2.5 mm.

L = Code length: The length of the bar code in mm including the start and stop characters. The quiet zone is included depending on the code definition.

$S_L$ = Bar length: Height of the elements in mm.

Figure 5.9: The most important characteristics of a bar code

The range in which the bar code can be read by the BCL 300*i* \ BCL 301*i* (the so-called reading field) depends on the quality of the printed bar code and its dimensions.

Therefore, above all, the module of a bar code is decisive for the size of the reading field.

***Notice!***

*A rule of thumb: The smaller the module of the bar code is, the smaller the maximum reading distance and reading field width will be.*

### 5.4.2 Raster scanner

A raster variant is also available in the BCL 300*i* series. The BCL 300*i* as a raster scanner projects 8 scan lines which vary depending on the reading distance from the raster aperture.

| | | Distance [mm] starting at the zero position | | | | | | |
|---|---|---|---|---|---|---|---|---|
| | | 50 | 100 | 200 | 300 | 400 | 450 | 700 |
| **Raster line cover [mm] all raster lines** | Front scanner | **8** | **14** | **24** | **35** | **45** | **50** | **77** |
| | Deflection mirror scanner | **12** | **17** | **27** | **38** | **48** | **54** | **80** |

Table 5.7: Raster line cover as a function of the distance

## 5.5 Reading field curves

***Notice!***

*Please notice that the real reading fields are also influenced by factors such as labeling material, printing quality, reading angle, printing contrast etc., and may thus deviate from the reading fields specified here.*

*The reading field curves also apply for the variants with heating.*

The zero position of the reading distance always refers the front edge of the housing of the beam exit and is shown in figure 5.10 for the three housing types of the BCL 300*i* \ BCL 301*i*.

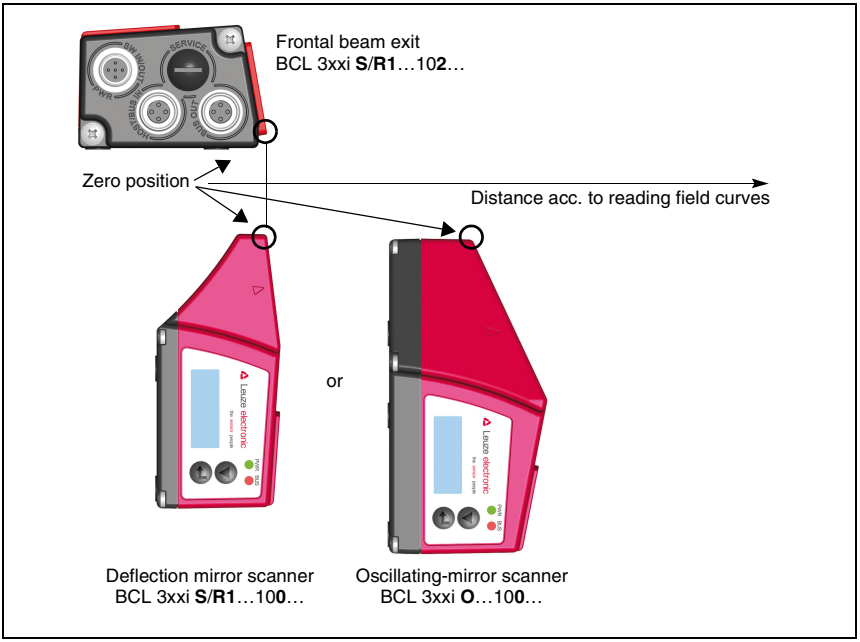


Figure 5.10: Zero position of the reading distance

***Reading conditions for the reading field curves***

| | |
|---|---|
| **Bar code type** | 2/5 Interleaved |
| **Ratio** | 1:2.5 |
| **ANSI specification** | class A |
| **Reading rate** | > 75% |

Table 5.8: Reading conditions

### 5.5.1 High Density (N) - optics: BCL 300*i* \ BCL 301*i* S/R1 N 102 (H)

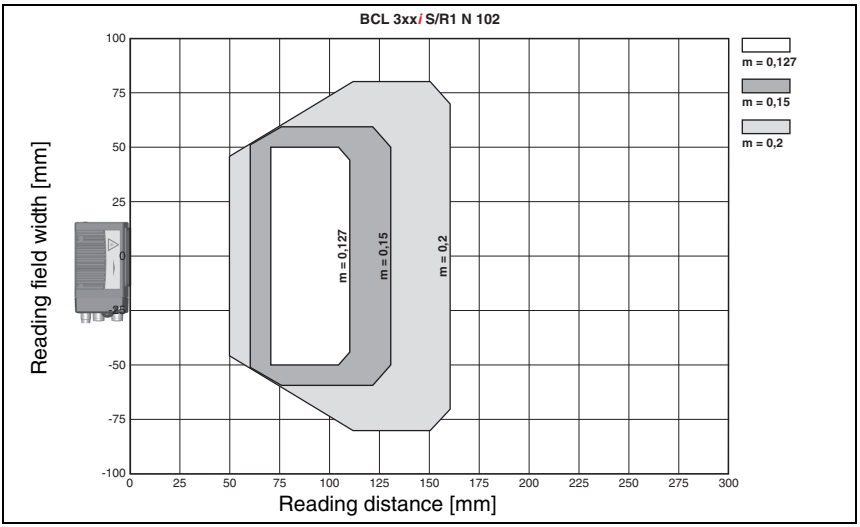


Figure 5.11: "High Density" reading field curve for line scanner without deflection mirror

### 5.5.2 High Density (N) - optics: BCL 300*i* \ BCL 301*i* S/R1 N 100 (H)

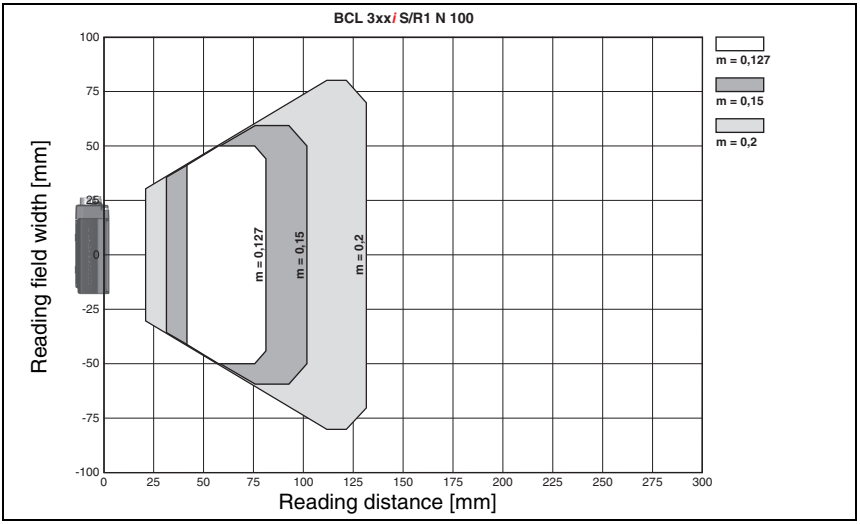


Figure 5.12: "High Density" reading field curve for line scanner with deflection mirror

The reading field curve applies for the reading conditions stated in table 5.8.

### 5.5.3 High Density (N) - optics: BCL 300*i* \ BCL 301*i* ON 100 (H)

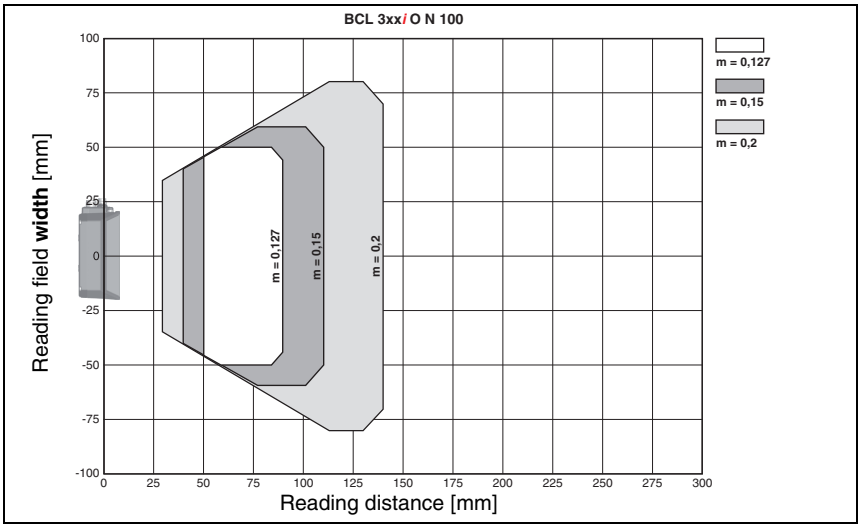


Figure 5.13: "High Density" reading field curve for oscillating-mirror scanners

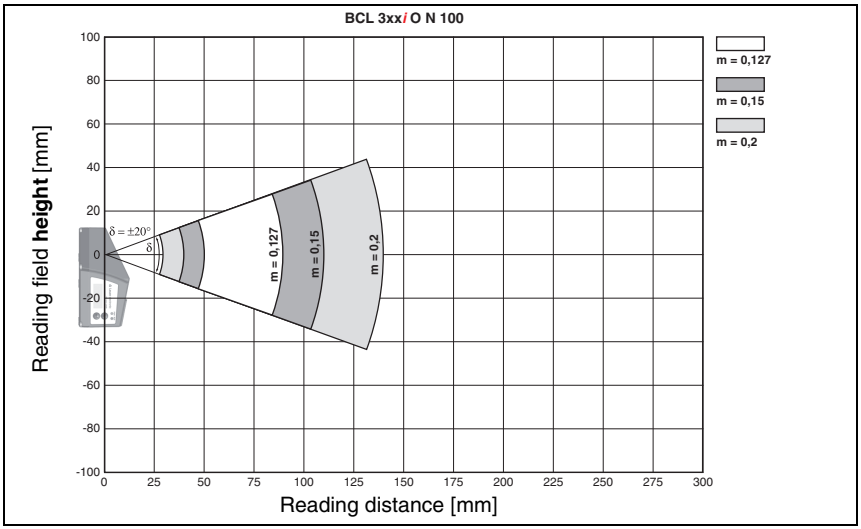


Figure 5.14: Lateral "High Density" reading field curve for oscillating-mirror scanners

The reading field curves apply for the reading conditions stated in table 5.8.

### 5.5.4 Medium Density (M) - optics: BCL 300*i* \ BCL 301*i* S/R1 M 102 (H)

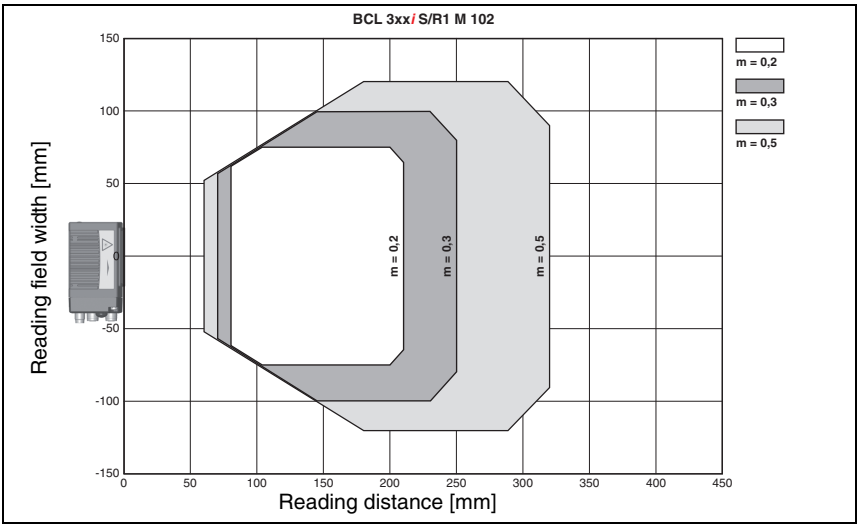


Figure 5.15: "Medium Density" reading field curve for line scanner without deflection mirror

### 5.5.5 Medium Density (M) - optics: BCL 300*i* \ BCL 301*i* S/R1 M 100 (H)

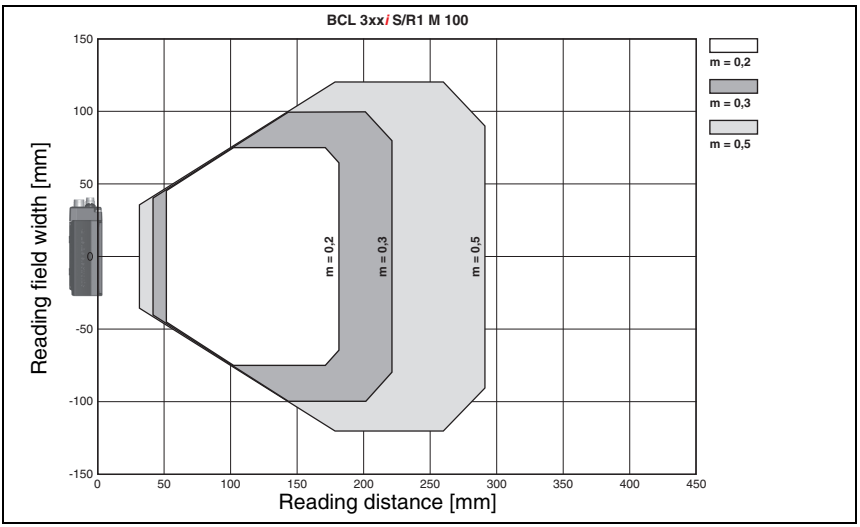


Figure 5.16: "Medium Density" reading field curve for line scanner with deflection mirror

The reading field curves apply for the reading conditions stated in table 5.8.

### 5.5.6 Medium Density (M) - optics: BCL 300*i* \ BCL 301*i* OM 100 (H)

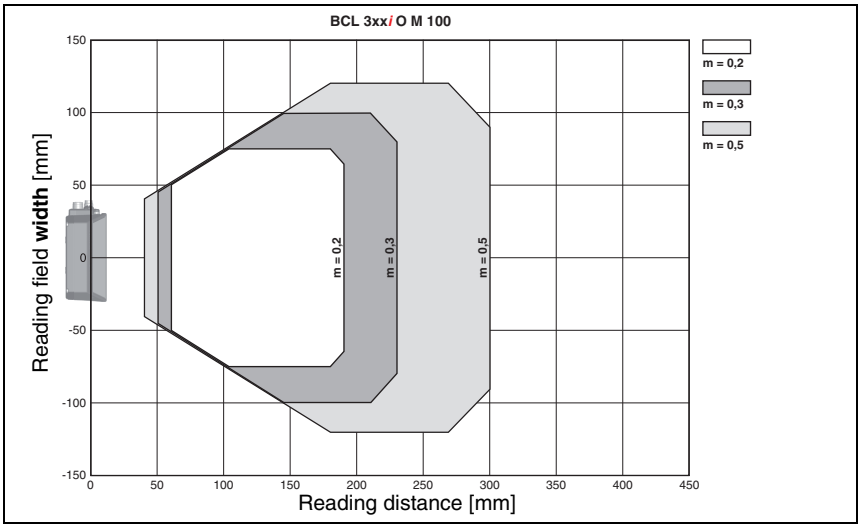


Figure 5.17: "Medium Density" reading field curve for oscillating-mirror scanners

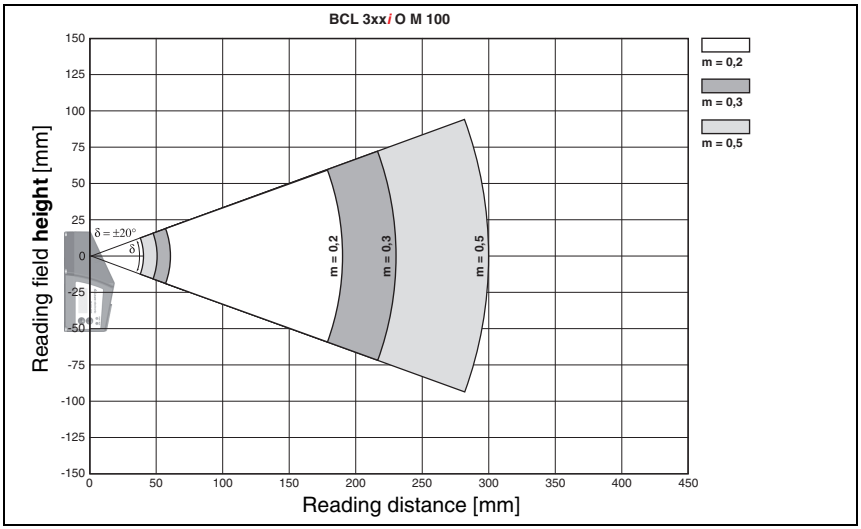


Figure 5.18: Lateral "Medium Density" reading field curve for oscillating-mirror scanners

The reading field curves apply for the reading conditions stated in table 5.8.

### 5.5.7 Low Density (F) - optics: BCL 300*i* \ BCL 301*i* S/R1 F 102 (H)

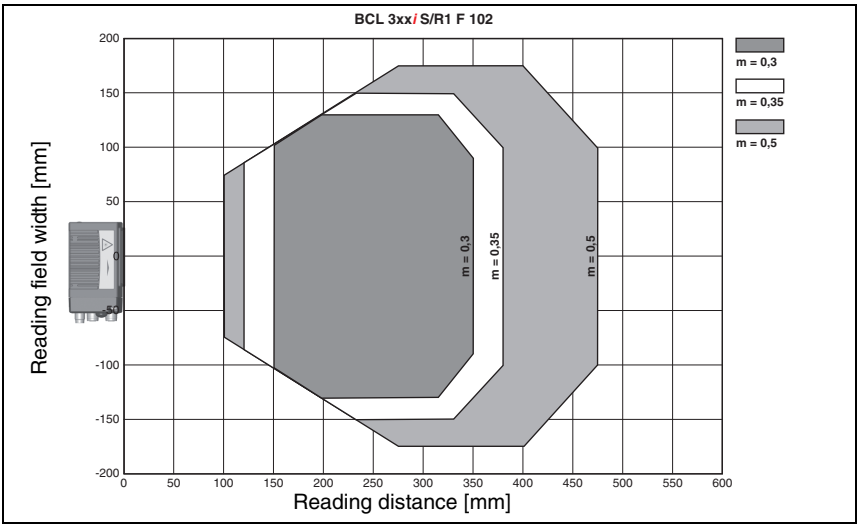


Figure 5.19: "Low Density" reading field curve for line scanner without deflection mirror

### 5.5.8 Low Density (F) - optics: BCL 300*i* \ BCL 301*i* S/R1 F 100 (H)

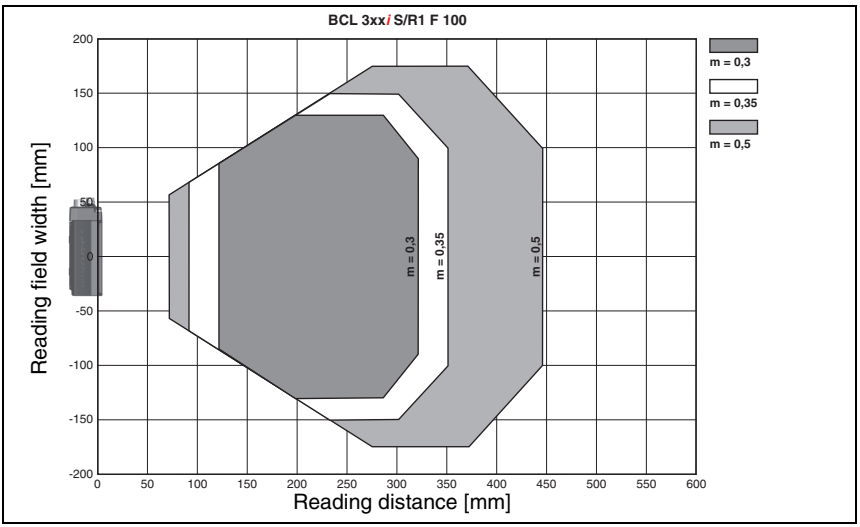


Figure 5.20: "Low Density" reading field curve for line scanner with deflection mirror

The reading field curves apply for the reading conditions stated in table 5.8.

### 5.5.9 Low Density (F) - optics: BCL 300*i* \ BCL 301*i* OF 100 (H)

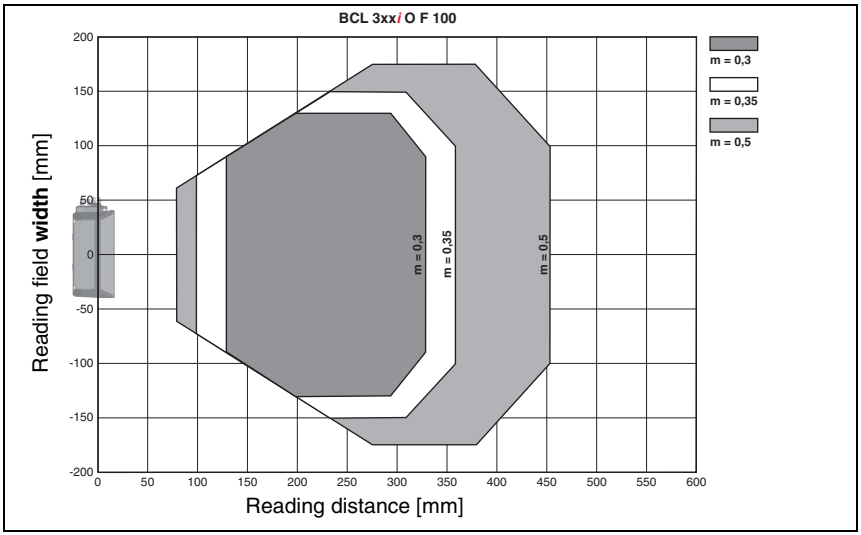


Figure 5.21: "Low Density" reading field curve for oscillating-mirror scanners

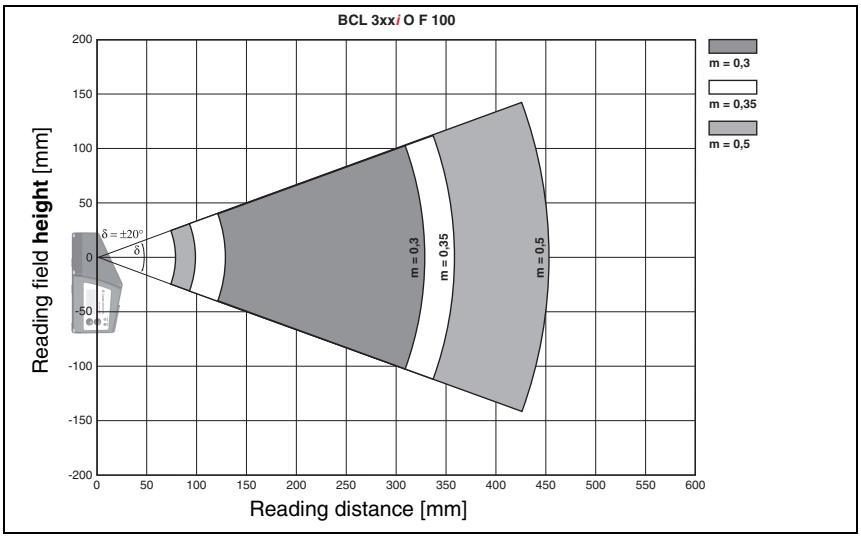


Figure 5.22: Lateral "Low Density" reading field curve for oscillating-mirror scanners

The reading field curves apply for the reading conditions stated in table 5.8.

### 5.5.10 Ultra Low Density (L) - optics: BCL 300*i* \ BCL 301*i* S/R1 L 102 (H)

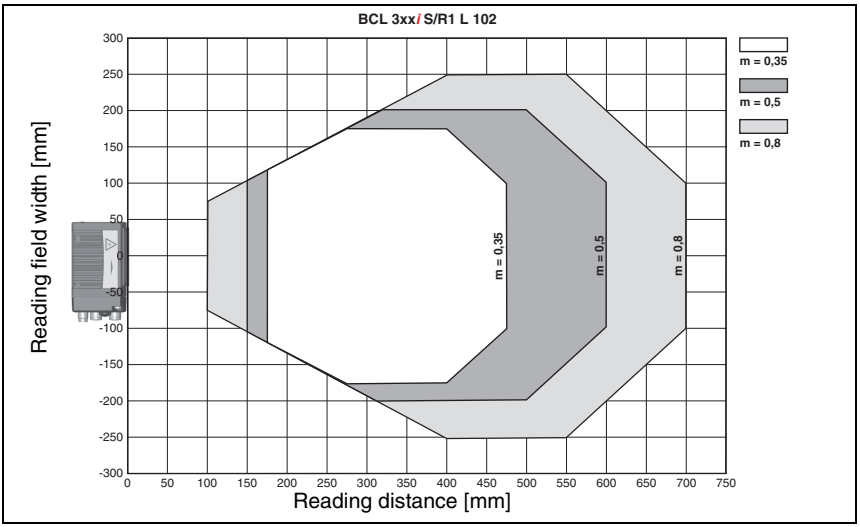


Figure 5.23: "Ultra Low Density" reading field curve for line scanner without deflection mirror

### 5.5.11 Ultra Low Density (L) - optics: BCL 300*i* \ BCL 301*i* S/R1 L 100 (H)

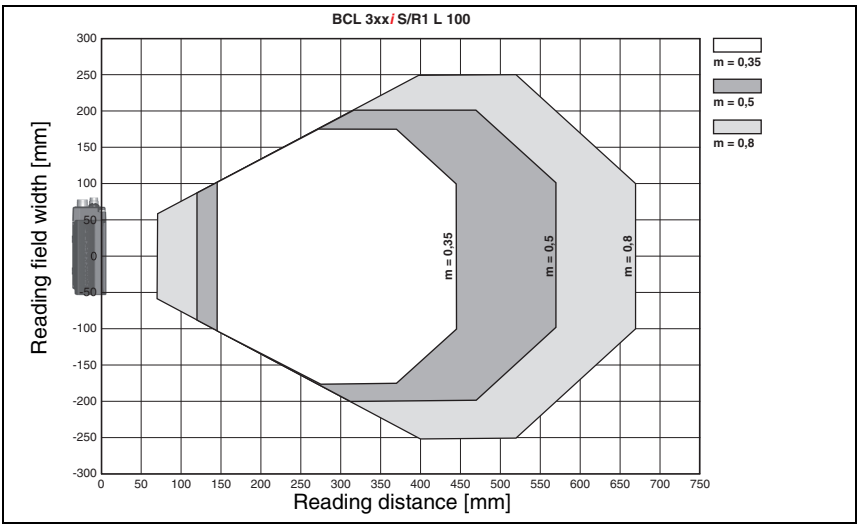


Figure 5.24: "Ultra Low Density" reading field curve for line scanner with deflection mirror

The reading field curves apply for the reading conditions stated in table 5.8.

### 5.5.12 Ultra Low Density (L) - optics: BCL 300*i* \ BCL 301*i* OL 100 (H)

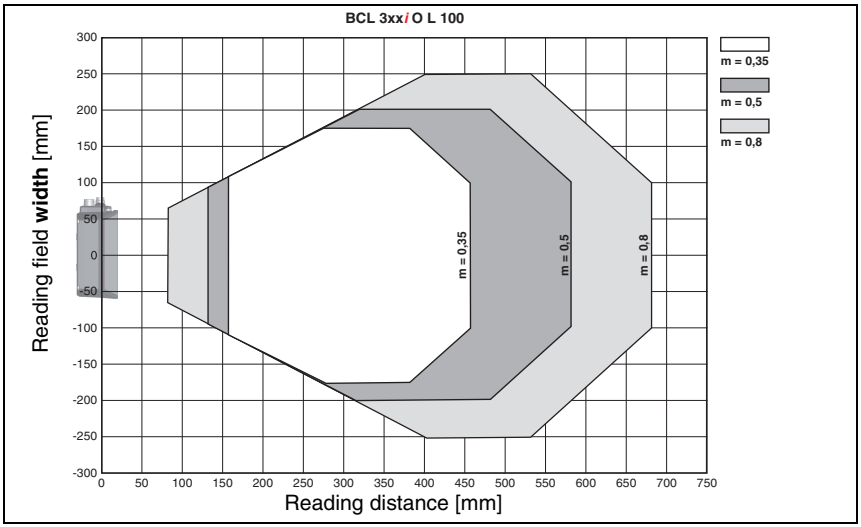


Figure 5.25: "Ultra Low Density" reading field curve for oscillating-mirror scanners

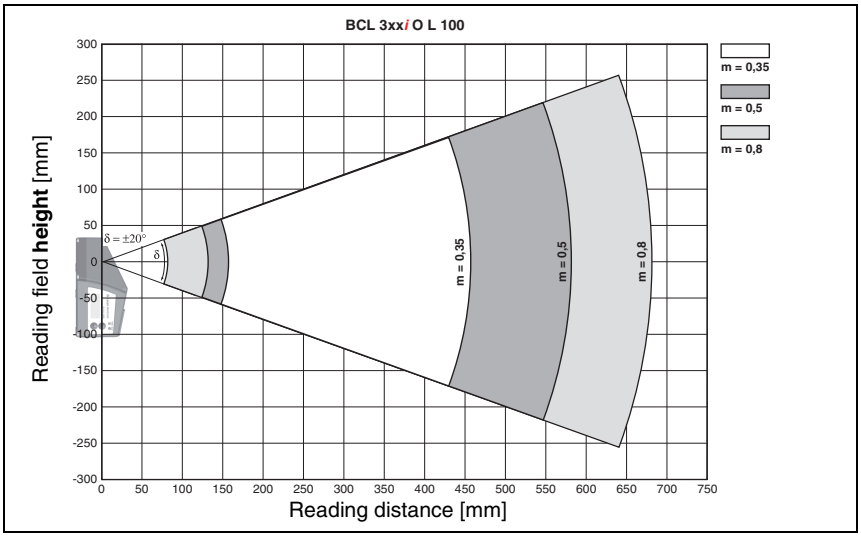


Figure 5.26: Lateral "Ultra Low Density" reading field curve for oscillating-mirror scanners

The reading field curves apply for the reading conditions stated in table 5.8.

# 6 Installation and mounting

## 6.1 Storage, transportation

***Attention!***

*When transporting or storing, package the device so that it is protected against collision and humidity. Optimum protection is achieved when using the original packaging. Heed the required environmental conditions specified in the technical data.*

***Unpacking***

- *Check the packaging for any damage. If damage is found, notify the post office or shipping agent as well as the supplier.*
- *Check the delivery contents using your order and the delivery papers:*
  - Delivered quantity
  - Device type and model as indicated on the name plate
  - Laser warning signs
  - Brief manual

The name plate provides information as to what BCL type your device is. For specific information, please refer to chapter 5.

***Name plates of the bar code readers of the BCL 300i \ BCL 301i series***

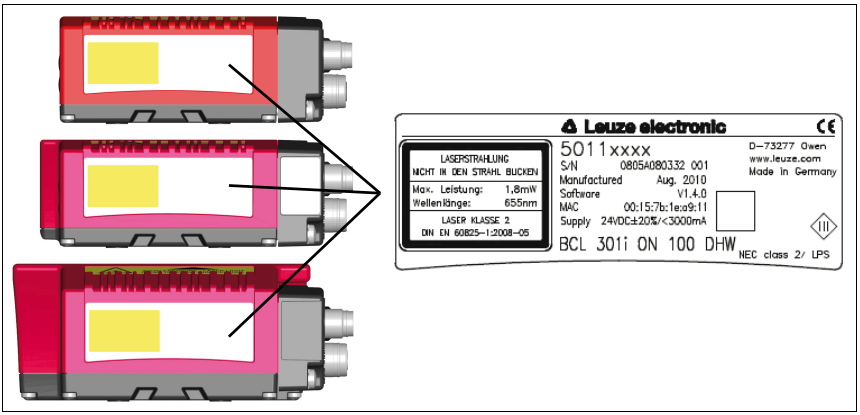


Figure 6.1: Device name plate BCL 300*i* \ BCL 301*i*

- *Save the original packaging for later storage or shipping.*

***Notice!***

*All BCL 300i \ BCL 301i are delivered with a protective cover on the connection side which must be removed before attaching a connection hood.*

If you have any questions concerning your shipment, please contact your supplier or your local Leuze electronic sales office.

↳ *Observe the applicable local regulations when disposing of the packaging materials.*

## 6.2 Mounting the BCL 300*i* \ BCL 301*i*

The BCL 300*i* \ BCL 301*i* bar code readers can be mounted in two different ways:

- Via four or six M4x5 screws on the bottom of the device.
- Via a BT 56 mounting device in the two fastening grooves on the bottom of the device.

***Attention!***

*The BCL 300i does not fulfill protection class IP 65 until the connection hood has been screwed on. Minimum tightening torque of the housing connection screws on the connection hood 1.4 Nm!*

### 6.2.1 Fastening with M4 x 5 screws

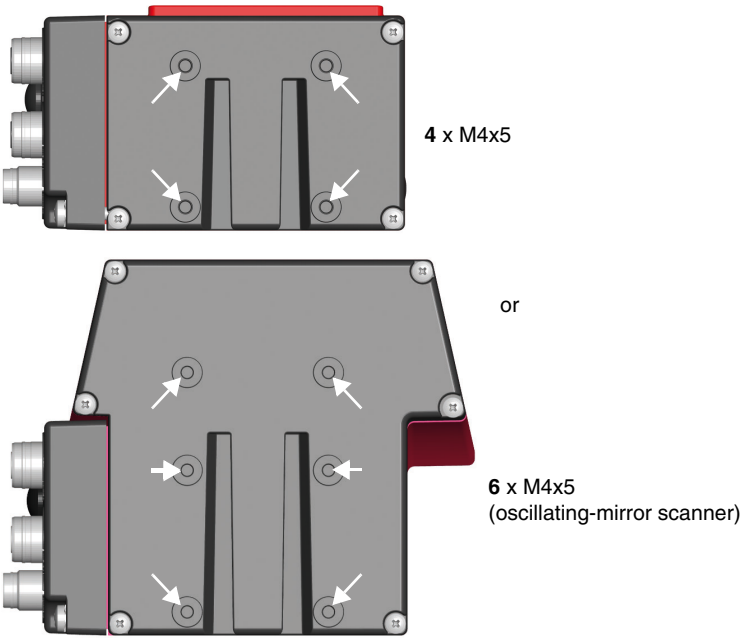


Figure 6.2: Fastening options using M4x5 threaded holes

### 6.2.2 BT 56 mounting device

The BT 56 mounting device is available for mounting the BCL 300*i* \ BCL 301*i* using the fastening grooves. It is designed for rod mounting (Ø 16mm to 20mm). For ordering instructions, please refer to chapter "Type overview and accessories" on page 136.

***BT 56 mounting device***

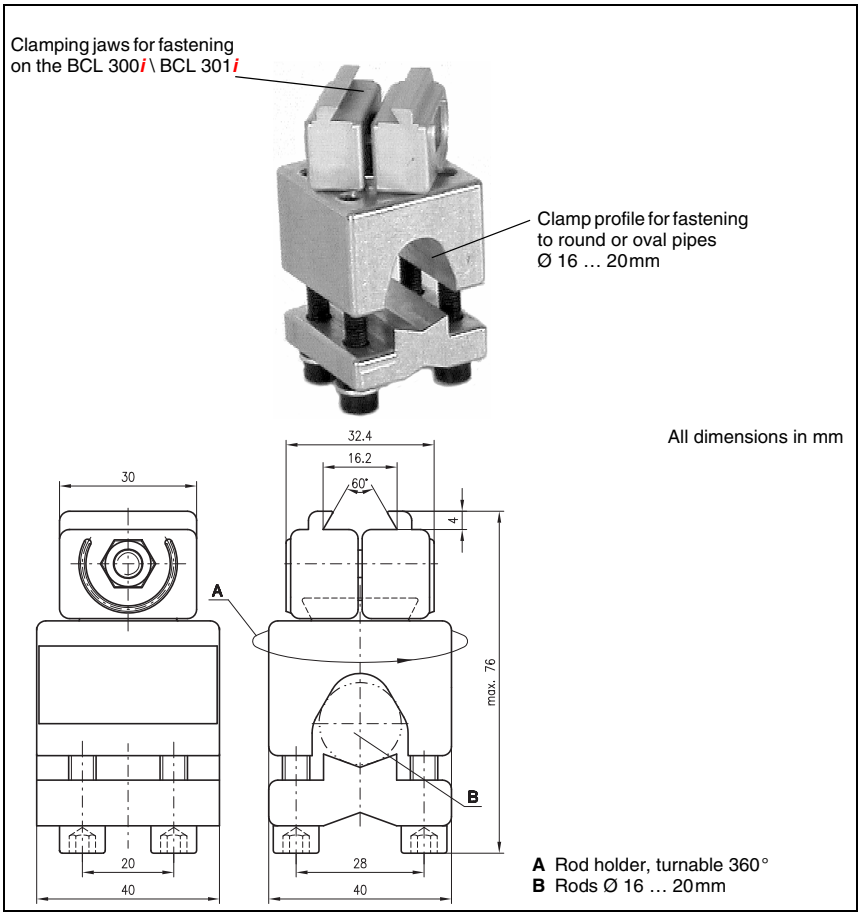


Figure 6.3: BT 56 mounting device

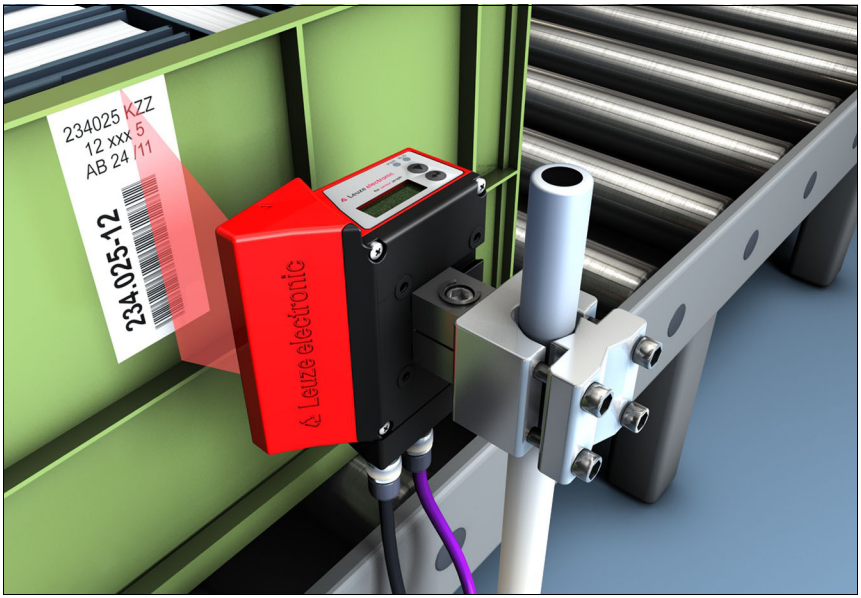


Figure 6.4: Mounting example of BCL 300*i* \ BCL 301*i* with BT 56

### 6.2.3 BT 59 mounting device

The BT 59 mounting device offers you an additional fastening option. For ordering instructions, please refer to chapter "Type overview and accessories" on page 136.

***BT 59 mounting device***

Clamping jaws for fastening on the BCL 300*i* \ BCL 301*i*

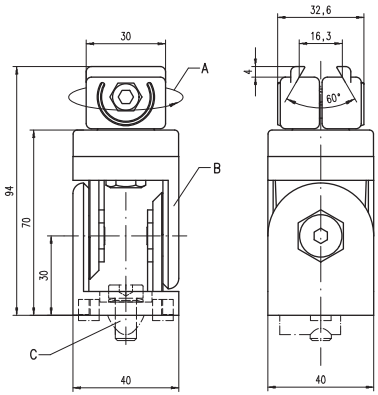


All dimensions in mm

**A** Holder, turnable 360°
**B** ITEM joint, angle adjustable ±90°
**C** M 8x16 screw cylinder, M 8 wave washer, M 8 sliding block, connectors for ITEM profile (2x)

Figure 6.5: BT 59 mounting device

***Notice!***

*When mounting, ensure that the scanning beam is not reflected directly back to the scanner by the label which is being read. For further information, see the notices in chapter 6.3! Please refer to chapter 5.4 for the permissible minimum and maximum distances between the BCL 300i \ BCL 301i and the labels to be read.*

## 6.3 Device arrangement

### 6.3.1 Selecting a mounting location

In order to select the right mounting location, several factors must be considered:

- Size, orientation, and position tolerance of the bar codes on the objects to be scanned.
- The reading field of the BCL 300*i* \ BCL 301*i* in relation to the bar code module width.
- The resulting minimum and maximum reading distance from the respective reading field (see chapter 5.4 "Reading field curves / optical data").
- The permissible cable lengths between the BCL 300*i* \ BCL 301*i* and the host system depending on which interface is used.
- The correct time for data output. The BCL 300*i* \ BCL 301*i* should be positioned in such a way that, taking into consideration the time required for data processing and the conveyor belt speed, there is sufficient time to e.g. initiate sorting operations on the basis of the read data.
- The display elements such as LEDs or the display should be highly visible.
- For configuring and commissioning with the webConfig tool, the USB interface should be easily accessible.

For specific information, please refer to chapter 6 and chapter 7.

***Notice!***

*The beam of the BCL 300i \ BCL 301i exits:*

- **parallel** to the **housing base** in the case of the line scanner
- at **105 degrees** from the **housing base** in the case of the deflection mirror
- **perpendicular** to the **housing base** in the case of the oscillating mirror

In each case, the housing base is the black area in figure 6.2. The best read results are obtained when:

- *The BCL 300i \ BCL 301i is mounted in such a way that the scanning beam is incident on the bar code at an angle of inclination greater than ±10° … 15° to vertical.*
- *The reading distance lies in the middle area of the reading field.*
- *The bar code labels are of good print quality and have good contrast ratios.*
- *You do not use high-gloss labels.*
- *There is no direct sunlight.*

### 6.3.2 Avoiding total reflection – Line scanner

The bar code label must be positioned at an angle of inclination greater than ±10° … 15° from vertical in order to avoid total reflection of the laser beam (see figure 6.6)!

Total reflection occurs whenever the laser light of the bar code reader is directly incident on the surface of the bar code at an angle of 90°. The light directly reflected by the bar code may overload the bar code reader and thereby cause non-readings!

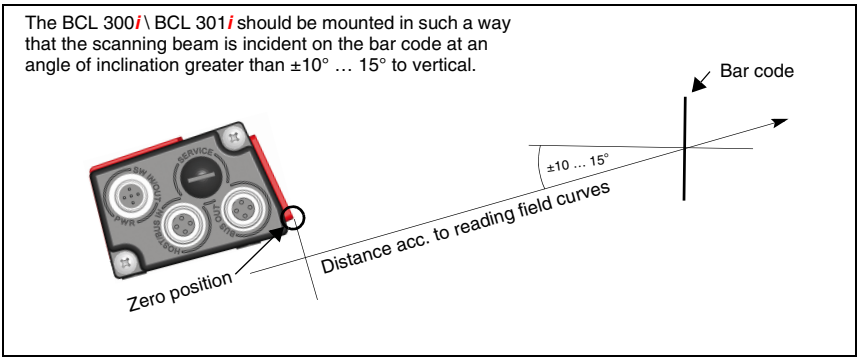


Figure 6.6: Total reflection – line scanner

### 6.3.3 Avoiding total reflection – deflection mirror scanner

For the BCL 300*i* \ BCL 301*i* with **deflection mirror**, the laser beam exits at an angle of 105° to the rear housing wall.

An angle of incidence of 15° of the laser to the label has already been integrated in the deflection mirror so that the BCL 300*i* \ BCL 301*i* can be installed parallel to the bar code (rear housing wall).

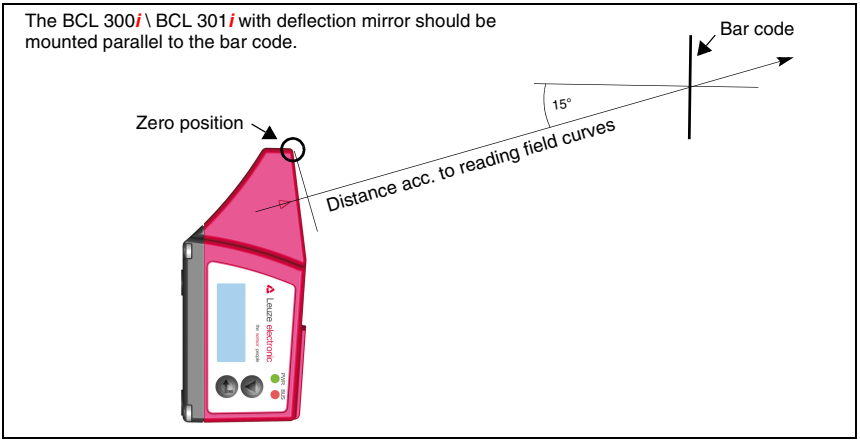


Figure 6.7: Total reflection – line scanner

### 6.3.4 Avoiding total reflection – oscillating-mirror scanner

For the BCL 300*i* \ BCL 301*i* with **oscillating mirror**, the laser beam exits at an angle of **90° to vertical**.

For the BCL 300*i* \ BCL 301*i* with **oscillating mirror**, the **swivel range of ±20°** (±12° for devices with heating) **is to be taken into account**.

This means that in order to be on the safe side and to avoid total reflection, the BCL 300*i* \ BCL 301*i* with oscillating mirror must be inclined upward or downward 20° … 30°!

***Notice!***

*Mount the BCL 300i \ BCL 301i with oscillating mirror in such a way that the outlet window of the bar code reader is parallel to the object. This will result in an angle of inclination of approx. 25°.*

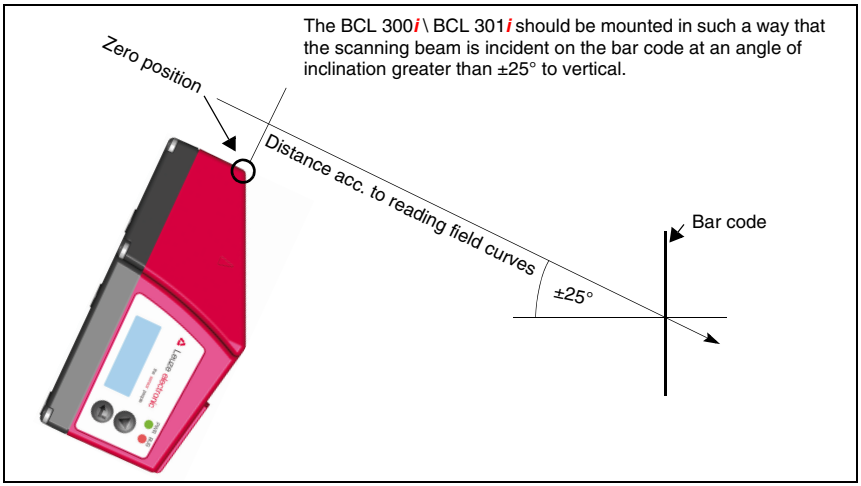


Figure 6.8: Total reflection – BCL 300*i* \ BCL 301*i* with oscillating mirror

### 6.3.5 Mounting location

*When selecting a mounting location, pay attention to:*

- *Maintaining the required environmental conditions (temperature, humidity).*
- *Possible soiling of the reading window due to liquids, abrasion by boxes, or packaging material residues.*
- *Lowest possible chance of damage to the BCL 300i \ BCL 301i by mechanical collision or jammed parts.*
- *Possible extraneous light (no direct sunlight or sunlight reflected by the bar code).*

### 6.3.6 Devices with integrated heating

*For devices with integrated heating, also observe the following points:*

- Mount the BCL 300*i* \ BCL 301*i* in a way which provides maximum thermal isolation, e.g. using rubber-bonded metal.
- Mount in such a way that the device is protected from draft and wind; mount additional shields if necessary.

***Notice!***

*When installing the BCL 300i \ BCL 301i in a protective housing, it must be ensured that the scanning beam can exit the protective housing without obstruction.*

### 6.3.7 Possible reading angles between BCL 300*i* \ BCL 301*i* and bar code.

The optimum alignment of the BCL 300*i* \ BCL 301*i* is accomplished when the scan line scans the code bars almost at a right angle (90°). All reading angles that are possible between the scan line and bar code must be taken account (figure 6.9).

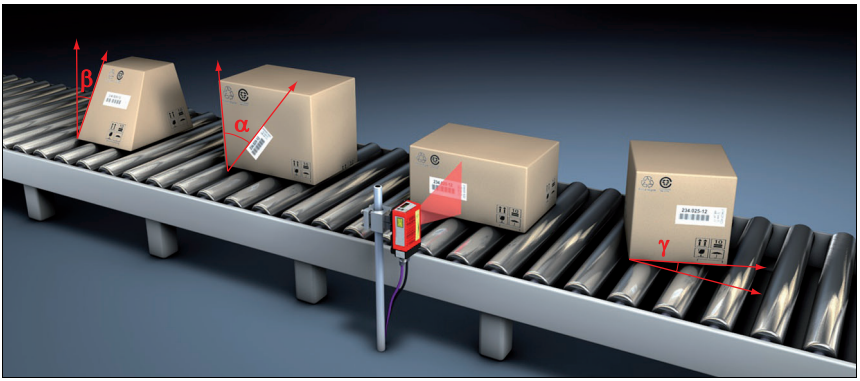


Figure 6.9: Reading angle for the line scanner

α Tilt

β Angle of inclination (Pitch)

γ Skew

In order to avoid total reflection, the skew γ should be greater than 10°.

## 6.4 Cleaning

↳ *Clean the glass pane of the BCL 300i \ BCL 301i with a soft cloth after mounting. Remove all packaging remains, e.g. carton fibers or Styrofoam balls. In doing so, avoid leaving fingerprints on the front cover of the BCL 300i \ BCL 301i.*

***Attention!***

*Do not use aggressive cleaning agents such as thinner or acetone for cleaning the device.*

# 7 Electrical connection

The bar code readers of the BCL 300*i* series feature a modular connection concept with replaceable connection hoods and an external terminal box that covers all connection variants (M12 connectors, terminals, 3m connection cables).

The additional Mini-B type USB interface is used for configuring the device.

The two product series BCL 300*i* and BCL 301*i* differ in their interfaces and in their function as standalone device or multiNet **slave**.

| | HOST / BUS IN | BUS OUT |
|---|---|---|
| BCL 300*i*<br>(standalone scanner)) | RS 232 / RS 422 | – |
| BCL 301*i*<br>(multiNet plus **slave**) | RS 485 | RS 485 |

Figure 7.1 shows the different connection variants.

***Notice!***

*On delivery, the products are provided with a plastic protective cap on the side of the system plug or the system socket.*

*Additional connection accessories can be found in chapter 13.*

***Attention!***

*The BCL 300i does not fulfill protection class IP 65 until the connection hood has been screwed on. Minimum tightening torque of the housing connection screws on the connection hood 1.4 Nm!*

### *Location of the electrical connections*

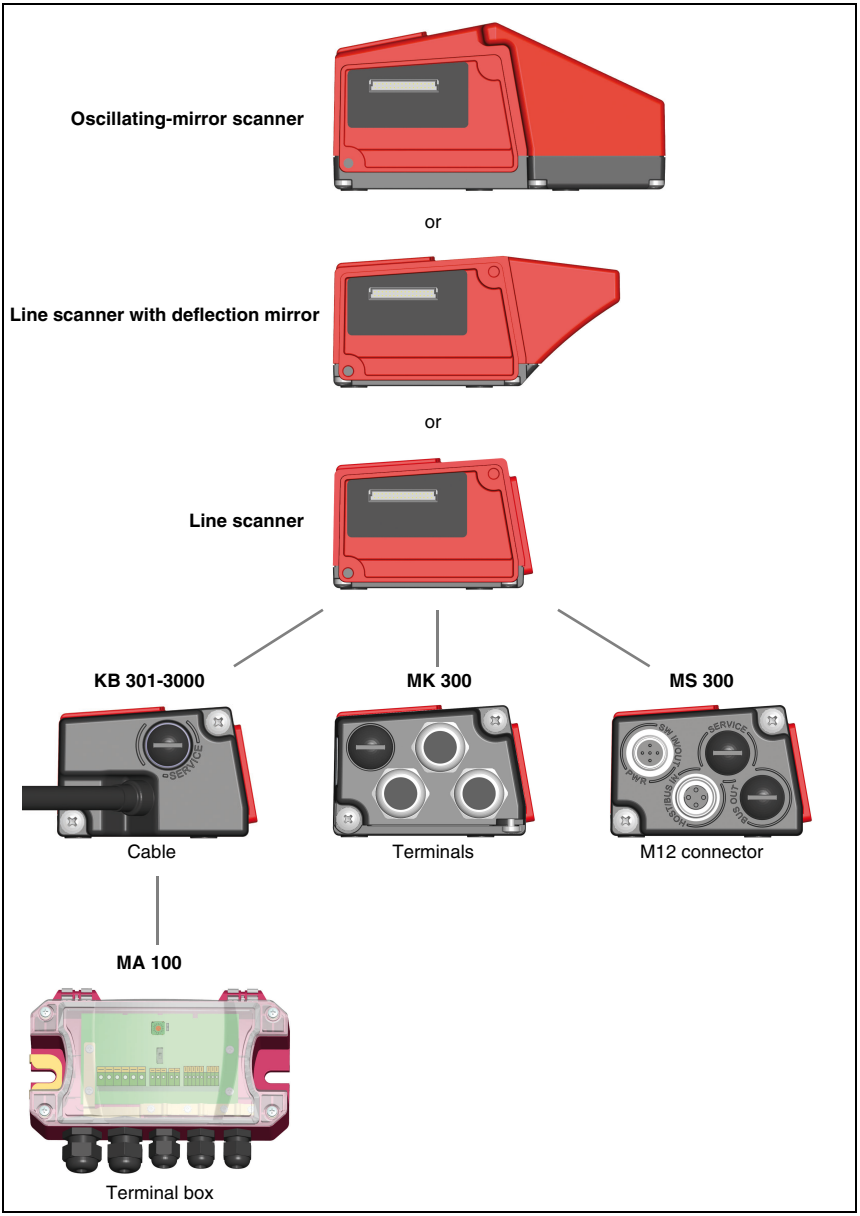


Figure 7.1: Location of the electrical connections

## 7.1 Safety notices for the electrical connection

***Attention!***

*Do not open the device yourself under any circumstances! There is otherwise a risk of uncontrolled emission of laser radiation from the device. The housing of the BCL 300i \ BCL 301i contains no parts that need to be adjusted or maintained by the user.*

*Before connecting the device, be sure that the supply voltage agrees with the value printed on the name plate.*

*Connection of the device and cleaning must only be carried out by a qualified electrician.*

*Ensure that the functional earth (FE) is connected correctly. Unimpaired operation is only guaranteed when the functional earth is connected properly.*

*If faults cannot be corrected, the device should be removed from operation and protected against possible commissioning.*

***Attention!***

*For UL applications, use is permitted exclusively in Class 2 circuits according to NEC (National Electric Code).*

*The bar code readers of the BCL 300i series are designed in accordance with safety class III for supply by PELV (protective extra-low voltage).*

***Notice!***

*Protection class IP 65 is not fulfilled until connectors or cable lead-throughs are screwed on and caps are installed!*

***Attention!***

*To ensure protection class IP 65 is fulfilled, the screws of the connection hood are tightened with a tightening torque of 1.4 Nm for connecting to the BCL.*

## 7.2 Electrical connection BCL 300*i*

For the electrical connection of the BCL 300*i*, 4 connection variants are available.

The **voltage supply** (18 … 30 VDC) is connected acc. to the connection type selected.

**2 freely programmable switching inputs/outputs** for individual adaptation to the respective application are also available here. Detailed information on this topic can be found in chapter 7.4.1 and chapter 7.4.3.

### 7.2.1 MS 300 hood with 2 integrated M12 connectors

The MS 300 hood with integrated connectors features two M12 connector plugs and a Mini-B type USB socket as a service interface. Parameter memory is integrated into the MS 300 which temporarily stores the settings of the BCL 300*i* in the case of replacement and transmits them to a new device.

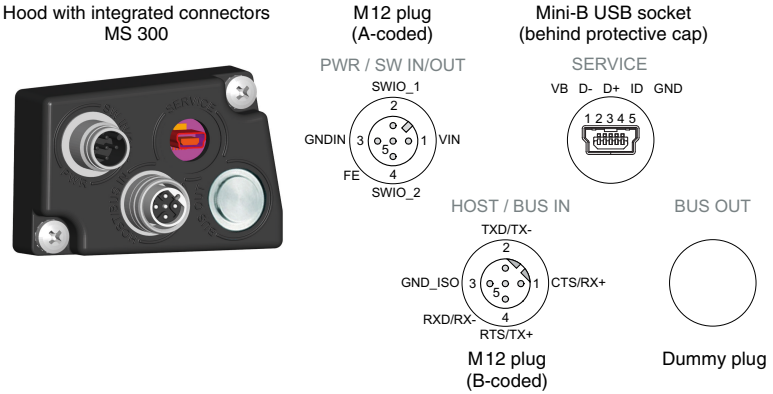


Figure 7.2: BCL 300*i* - MS 300 hood with integrated M12 connectors

***Notice!***

*The shielding connection is done via the M12 connector housing.*

***Notice!***

*The integrated parameter memory for the simple replacement of the BCL 300i is located in the MS 300.*

***Notice!***

*See chapter 5.3.6 "Dimensioned drawing of MS 3xx hood with integrated connectors / MK 3xx terminal hood" dimensioned drawing on page 51.*

### 7.2.2 MK 300 terminal hood with spring-loaded terminals

The MK 300 terminal hood makes it possible to connect the BCL 300*i* directly and without additional connectors. The MK 300 features three cable lead-throughs in which the shielding connection for the interface cable is also located. The BCL 300*i* is also to be configured when the MK 300 is in a closed state via a Mini-B type USB socket functioning as the service interface. Parameter memory is integrated into the MK 300 which temporarily stores the settings of the BCL 300*i* in the case of replacement and transmits them to a new device.

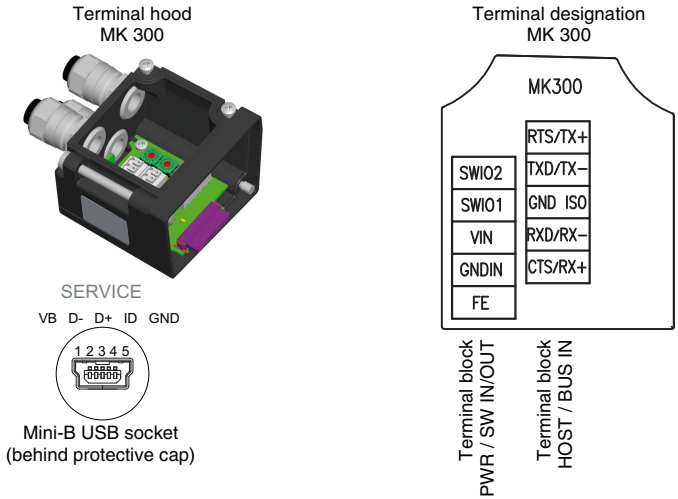


Figure 7.3: BCL 300*i* - MK 300 terminal hood with spring-loaded terminals

***Notice!***

*The integrated parameter memory for simple exchange of the BCL 300i is located in the MK 300.*

**Cable fabrication and shielding connection**

Remove approx. 78 mm of the connection cable sheathing. 15 mm of sheath of the shielded line must be freely accessible.

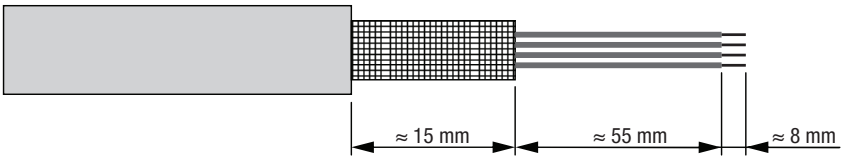


Figure 7.4: Cable fabrication for MK 300 terminal hood

The shield is automatically contacted when the cable is lead into the metal screw fitting and fastened when the cord grip is closed. Then lead the individual wires into the terminals according to the diagram. Wire end sleeves are not necessary.

***Notice!***

*See chapter 5.3.6 "Dimensioned drawing of MS 3xx hood with integrated connectors / MK 3xx terminal hood" dimensioned drawing on page 52.*

### 7.2.3 MA 100 terminal box and corresponding KB 301-3000 cable hood

The BCL 300*i* is connected to the MA 100 external terminal box via the KB 301-3000 cable hood. If need be, this allows the connection of the BCL 300*i* to be repositioned to a highly-accessible place. The USB service interface (Mini-B type socket) can be accessed through the KB 301-3000 cable hood.

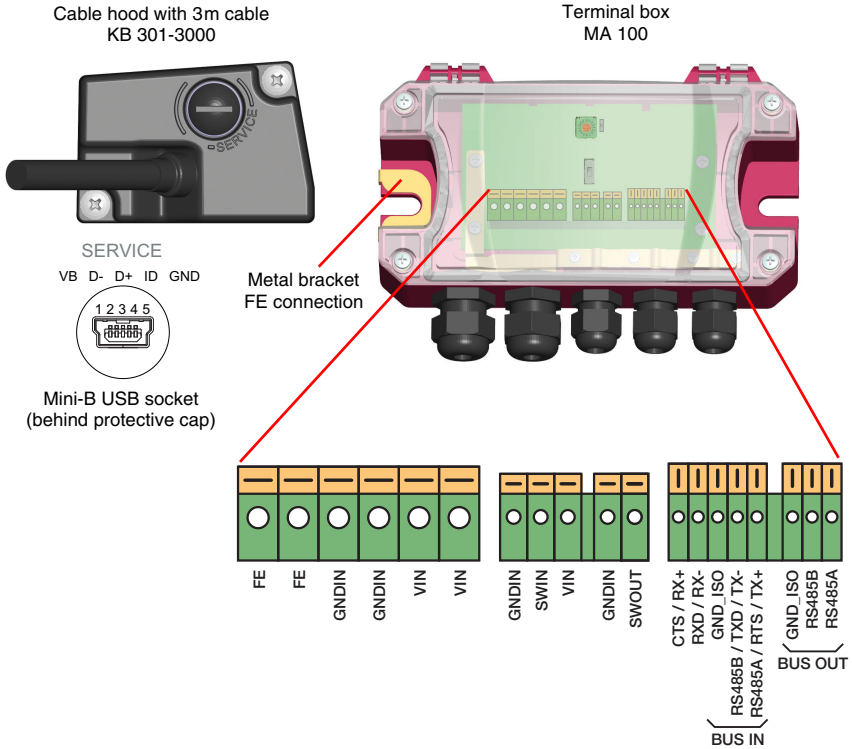


Figure 7.5: BCL 300*i* - MA 100 terminal box with KB 301-3000 cable hood

***Notice!***

*The left side of the housing of the MA 100 features a metal bracket for connecting functional earth FE to the installation surface (e.g. metallic equipment).*

*The MA 100 contains a shielding terminal for the shielding connection of the KB 301-3000.*

***Notice!***

*See chapter 5.3.8 "Dimensioned drawing of MA 100 terminal box" dimensioned drawing on page 53.*

### 7.2.4 KB 301-3000 cable hood

With the KB 301-3000 cable hood, it is possible to directly connect the BCL 300*i*. To do this, remove both system plugs (JST) at the end of the cable. The length of the connection cable is 3m.

Cable hood with 3m cable
KB 301-3000

SERVICE

VB D- D+ ID GND

Mini-B USB socket
(behind protective cap)

**Assignment**

| Core color | Signal |
|---|---|
| white | FE |
| white - black | GNDIN |
| black | VIN |
| white - green | SWIO2 |
| gray | SWIO1 |
| white - yellow | RXD / RX- |
| white - red | TXD / TX- |
| yellow | CTS / RX+ |
| red | RTS / TX+ |
| violet | GND_RS232/422 |
| white - brown | Reserved |
| brown | Reserved |
| white - orange | Reserved |
| orange | Reserved |
| green | Reserved |
| blue | Reserved |

Figure 7.6: BCL 300*i* - KB 301-3000 cable hood

***Notice!***

*A contact surface for the shielding connection is located on the cable end of the KB 301-3000.*

***Notice!***

*See chapter 5.3.7 "Dimensioned drawing of KB 301-3000 cable hood" dimensioned drawing on page 52.*

### 7.2.5 Standalone operationBCL 300*i*

During standalone operation of the BCL 300*i*, the host interface of the superior system is connected to HOST/BUS IN. Please make certain that the correct interface is used on the superior system. The standard setting of the BCL 300*i* for the host interface is RS 232.

## 7.3 Electrical connection BCL 301*i*

For the electrical connection of the BCL 301*i*, 3 connection variants are available.

The **voltage supply** (18 … 30 VDC) is connected acc. to the connection type selected.

**2 freely programmable switching inputs/outputs** for individual adaptation to the respective application are also available here. Detailed information on this topic can be found in chapter 7.4.1.

### 7.3.1 MS 301 hood with 3 integrated M12 connectors

The MS 301 hood with integrated connectors features three M12 connector plugs and a Mini-B type USB socket as a service interface. Parameter memory is integrated into the MS 301 which temporarily stores the settings of the BCL 301*i* in the case of replacement and transmits them to a new device.

The address switch located in the MS 301 is used to set the multiNet address of the BCL 301*i*. If the BCL 301*i* is the last participant on the multiNet bus cable, the BUS OUT socket on the MS 301 must be fitted with a terminator plug (accessories).

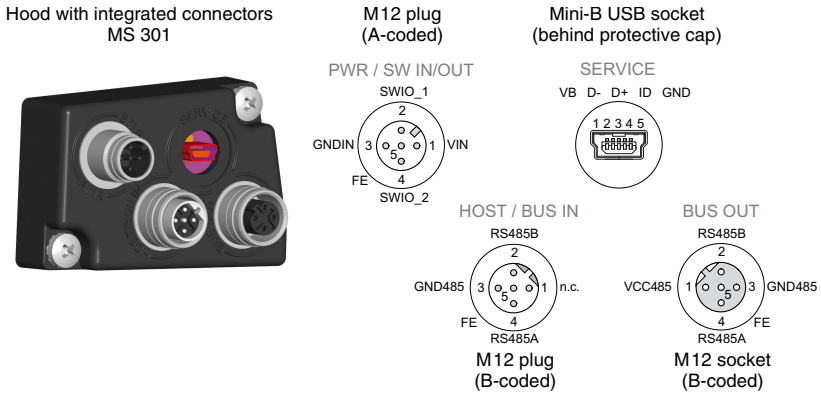


Figure 7.7: BCL 301*i* - MS 301 hood with integrated M12 connectors

***Notice!***

*The shielding connection is done via the M12 connector housing.*

***Notice!***

*The integrated parameter memory for the simple replacement of the BCL 301i is located in the MS 301.*

***Notice!***

*The bus is looped through the MS 301, i.e. the bus is not interrupted when the BCL 301i is removed from the MS 301.*
*The bus is terminated at BUS OUT via an external mounted terminating resistor (See chapter 13.5 "Accessory terminating resistor").*

***Notice!***

*See chapter 5.3.6 "Dimensioned drawing of MS 3xx hood with integrated connectors / MK 3xx terminal hood" dimensioned drawing on page 51.*

## 7.3.2 MK 301 terminal hood with spring-loaded terminals

The MK 301 terminal hood makes it possible to connect the BCL 301*i* directly and without additional connectors. The MK 301 features three cable lead-throughs in which the shielding connection for the interface cable is also located. The BCL 301*i* is also to be configured when the MK 301 is in a closed state via a Mini-B type USB socket functioning as the service interface. Parameter memory is integrated into the MK 301 which temporarily stores the settings of the BCL 301*i* in the case of replacement and transmits them to a new device. Address setting as well as termination of the multiNet is done in the interior of the MK 301

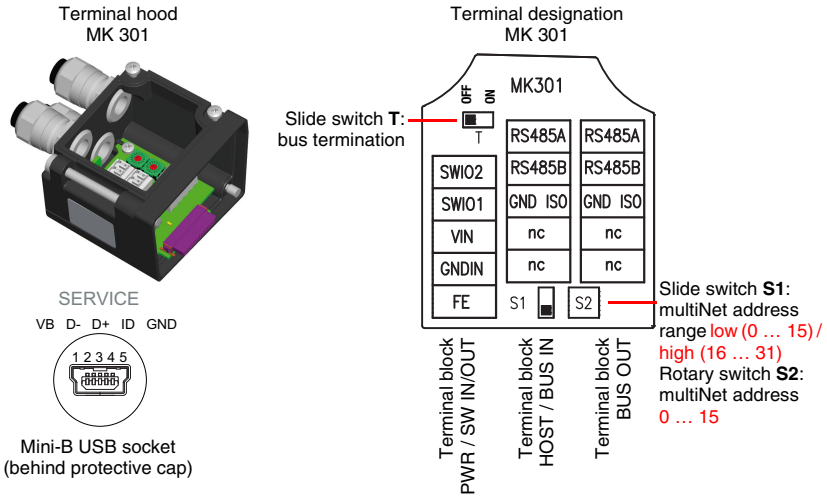


Figure 7.8: BCL 301*i* - MK 301 terminal hood with spring-loaded terminals

***Notice!***

*The integrated parameter memory for simple exchange of the BCL 301i is located in the MK 301.*

***Notice!***

*The bus is looped through the MK 301, i.e. the bus is not interrupted when the BCL 301i is removed from the MK 301. The bus is terminated via slide switch **T** in the MK 301. If the termination is activated (slide switch **T** in the **ON** position), the downstream bus is disconnected.*

**Cable fabrication and shielding connection**

Remove approx. 78 mm of the connection cable sheathing. 15 mm of sheath of the shielded line must be freely accessible.

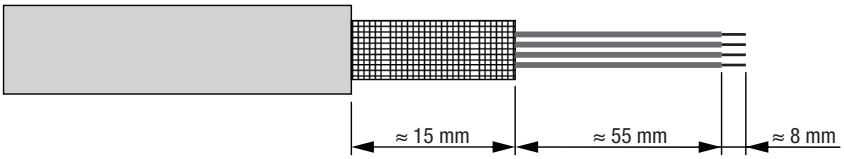


Figure 7.9: Cable fabrication for MK 301 terminal hood

The shield is automatically contacted when the cable is lead into the metal screw fitting and fastened when the cord grip is closed. Then lead the individual wires into the terminals according to the diagram. Wire end sleeves are not necessary.

***Notice!***

*See chapter 5.3.6 "Dimensioned drawing of MS 3xx hood with integrated connectors / MK 3xx terminal hood" dimensioned drawing on page 52.*

### 7.3.3 MA 100 terminal box and corresponding KB 301-3000 cable hood

The BCL 301*i* is connected to the MA 100 external terminal box via the KB 301-3000 cable hood. If need be, this allows the connection of the BCL 301*i* to be repositioned to a highly-accessible place. The USB service interface (Mini-B type socket) can be accessed through the KB 301-3000 cable hood.

The switches for setting the address and for multiNet termination are located in the terminal compartment of the MA 100.

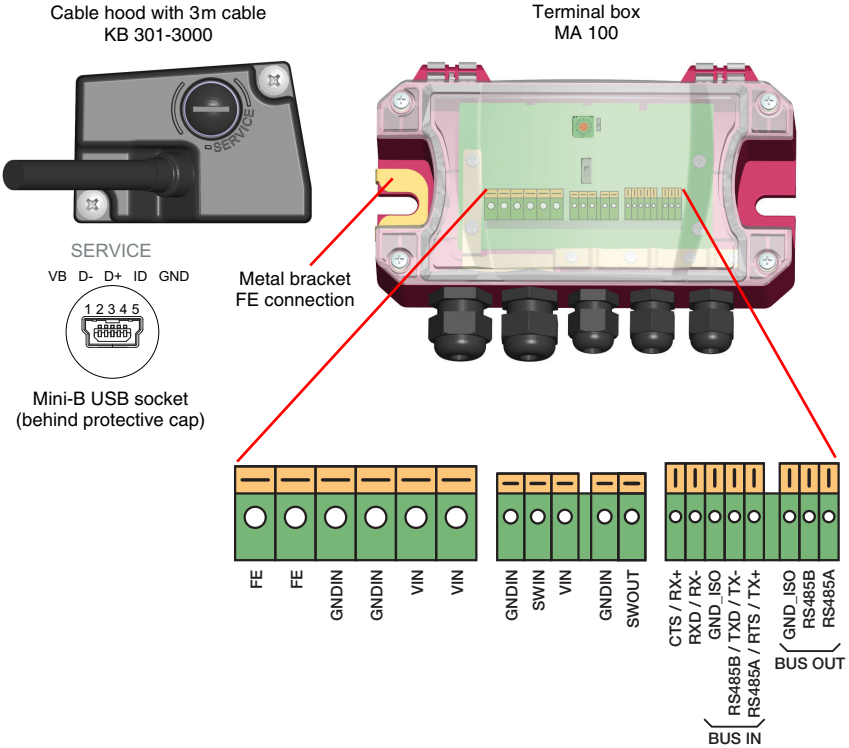


Figure 7.10: BCL 301*i* - MA 100 terminal box with KB 301-3000 cable hood

***Notice!***

*The left side of the housing of the MA 100 features a metal bracket for connecting functional earth FE to the installation surface (e.g. metallic equipment).*

*The MA 100 contains a shielding terminal for the shielding connection of the KB 301-3000.*

***Notice!***

*The bus is looped through the MA 100, i.e. the bus is not interrupted when the BCL 301i is removed from the KB 301-3000. The bus is terminated via slide switch **T** in the MA 100. If the termination is activated (slide switch **T** in the **ON** position), the downstream bus is disconnected.*

***Notice!***

*See chapter 5.3.8 "Dimensioned drawing of MA 100 terminal box" dimensioned drawing on page 53.*

***Notice!***

*Due to the lack of the address switch, the KB 301-3000 cable hood connection variant is not possible on the BCL 301i **without** the MA 100 terminal box, in contrast to the BCL 300i.*

### 7.3.4 Network operation BCL 301*i* in the Leuze multiNet plus

In Leuze multiNet plus network operation, the incoming bus is connected to **BUS IN** and the outgoing bus to **BUS OUT**. If the network address of the BCL 301*i* is not 0, the device starts up in multiNet slave mode and attempts to make contact with a multiNet master. If **BUS OUT** is not used for the continuing connection to the next participant, **BUS OUT** must be terminated with a terminating resistor. For this reason, a terminator plug is available for the MS 301 (See chapter 13.5 "Accessory terminating resistor"); in the MA 100 and the MK 301, termination is activated by a switch.

The device address is set in multiNet via the slide or rotary switch provided for this in the MA 100, MK 301 or MS 301.

## 7.4 Detailed description of the connections

Described in detail in the following are the individual connections and pin assignments.

### 7.4.1 PWR / SW IN/OUT - Voltage supply and switching input/outputs 1 and 2

| PWR / SW IN/OUT | | | | |
|---|---|---|---|---|
| **MS 300 / MS 301**<br>PWR / SW IN/OUT<br> 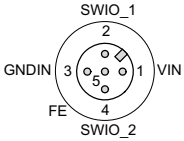 <br><br>**M12 plug (A-coded)**<br>**MK 300 / MK 301**<br> 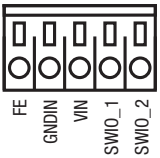 <br><br>**Spring-loaded terminals** | **Pin (M12)** | **Name (terminal)** | **Core color[1)]** | **Remark** |
| | 1 | VIN | black | Positive supply voltage +18 … +30VDC |
| | 2 | SWIO_1 | gray | Configurable switching input / output 1 |
| | 3 | GNDIN | white - black | Negative supply voltage 0VDC |
| | 4 | SWIO_2 | white - green | Configurable switching input / output 2 |
| | 5 | FE | white | Functional earth |
| | Thread | FE | | Functional earth (housing) |

Table 7.1: Pin assignment PWR / SW IN/OUT

1) on the KB 301-3000

#### *Supply voltage*

***Attention!***

*For UL applications, use is permitted exclusively in Class 2 circuits according to NEC (National Electric Code).*

*The bar code readers of the BCL 300i … series are designed in accordance with safety class III for supply by PELV (protective extra-low voltage).*

#### *Connecting functional earth FE*

↳ *Ensure that the functional earth (FE) is connected correctly. Unimpaired operation is only guaranteed when the functional earth is connected properly. All electrical disturbances (EMC couplings) are discharged via the functional earth connection.*

### *Switching input / output*

The bar code readers of the BCL 300*i* series are equipped with two freely programmable, opto-decoupled switching inputs and outputs, **SWIO_1** and **SWIO_2**.

The switching inputs can be used to activate various internal functions of the BCL 300*i* \ BCL 301*i* (decoding, autoConfig, …). The switching outputs can be used to signal the state of the BCL 300*i* \ BCL 301*i* and to implement external functions independent of the superior control.

***Notice!***

*The respective function as input or output can be set with the aid of the webConfig configuration tool!*

Described in the following is the external wiring for use as a switching input or output; the respective function assignments to the switching inputs/outputs can be found in chapter 10.

### *Function as switching input*

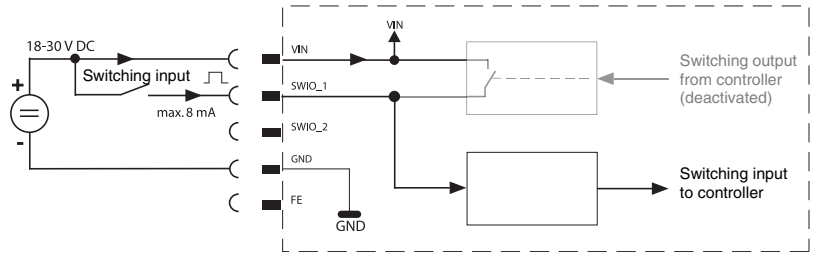


Figure 7.1: Switching input connection diagram SWIO_1 and SWIO_2

↳ *If you use a sensor with a standard M12 connector, please note the following:*

- Pins 2 and 4 must not be operated as switching outputs if sensors which function as inputs are also connected to these pins.

If, for example, the inverted sensor output is connected to pin 2, and pin 2 of the bar code reader is, at the same time, configured as an output (and not as an input), the switching output malfunctions.

***Attention!***

*The maximum input current must not exceed 8 mA!*

***Function as switching output***

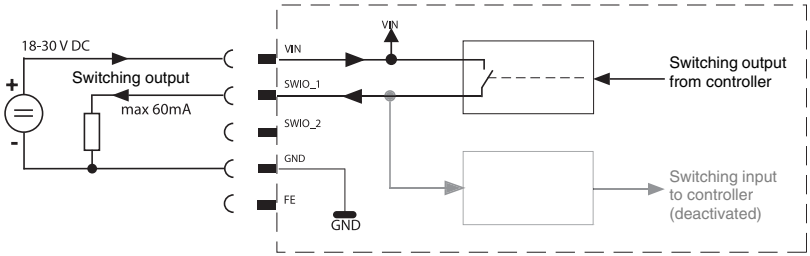


Figure 7.2: Switching output connection diagram SWIO_1 / SWIO_2

***Attention!***

*Each configured switching output is short-circuit proof! Do not load the respective switching output of the BCL 300i \ BCL 301i with more than 60 mA at +18 … +30 VDC in normal operation!*

***Notice!***

*Both switching inputs/outputs SWIO_1 and SWIO_2 are configured by default in such a way that:*

- Switching input SWIO_1 activates the reading gate.
- Switching output SWIO_2 switches by default on "No Read."

## 7.4.2 SERVICE – USB interface (Mini-B type)

| SERVICE – USB interface (Mini-B type) | | | |
|---|---|---|---|
| SERVICE<br>VB D- D+ ID GND<br>1 2 3 4 5 | **Pin (USB Mini-B)** | **Name** | **Remark** |
| | 1 | VB | Sense input |
| | 2 | D- | Data - |
| | 3 | D+ | Data + |
| | 4 | ID | not connected |
| | 5 | GND | Ground |

Table 7.2: Pin assignment SERVICE – Mini-B type USB interface

↳ *Ensure adequate shielding.*

The entire connection cable must absolutely be shielded acc. to the USB specifications. Cable length must not exceed 3 m.

↳ *Use the Leuze-specific **USB service cable** (See chapter 13 "Type overview and accessories") for the connection and use a service PC to configure.*

***Notice!***

*IP 65 is achieved only if the connectors and caps are screwed into place.*

### 7.4.3 HOST / BUS IN for BCL 300*i*

The BCL 300*i* makes either the RS 232 or RS 422 interface available as host interface. This is selected via the "webConfig" configuration software. The pin assignments change depending on the selected interface type, see table 7.3 and Figure 7.3/Figure 7.4.

| HOST / BUS IN (RS 232 / RS 422) | | | | |
|---|---|---|---|---|
| **MS 300**<br>HOST / BUS IN<br> 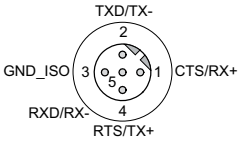 <br><br>**M12 connector (B-coded)**<br>**MK 300**<br> 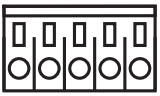 <br>CTS / RX+<br>RXD / RX-<br>GND_ISO<br>TXD / TX-<br>RTS / TX+<br>**Spring-loaded terminals** | **Pin (M12)** | **Name (terminal)** | **Core color[1)]** | **Remark** |
| | 1 | CTS / RX+ | yellow | CTS signal (RS 232) / RX+ (RS 422) |
| | 2 | TXD / TX- | white - red | TXD signal (RS 232) / TX- (RS 422) |
| | 3 | GND_ISO | Violet | Reference potential 0V for RS 232 |
| | 4 | RTS/TX+ | red | RTS signal (RS 232) / TX+ (RS 422) |
| | 5 | RXD/RX- | white - yellow | RXD signal (RS 232) / RX- (RS 422) |
| | FE via thread | FE via screw fitting | | Functional earth (housing) |

Table 7.3: Pin assignment HOST / BUS IN BCL 300*i*

1) on the KB 301-3000

### *RS 232 interface*

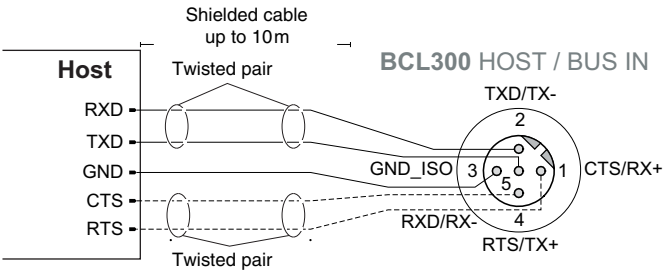


Figure 7.3: BCL 300*i* - Pin assignments - HOST / BUS IN as RS 232

***Notice for connecting the RS 232 interface!***

*Ensure adequate shielding. The entire connection cable must be shielded and earthed. Apply the shield on both sides.*
*The cables for RTS and CTS must only be connected if RTS/CTS hardware handshake is used.*

### *RS 422 interface*

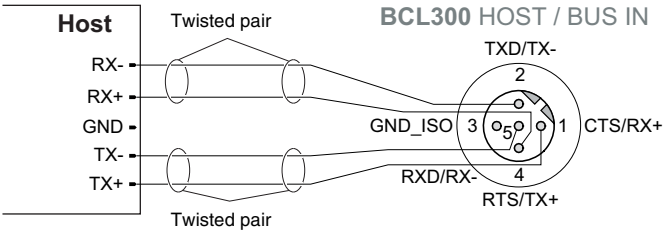


Figure 7.4: BCL 300*i* - Pin assignments - HOST / BUS IN as RS 422

***Notice for connecting the RS 422 interface!***

*Ensure adequate shielding. The entire connection cable must be shielded and earthed. The Rx+/Rx- and Tx+/Tx- wires must be stranded in pairs (Twisted Pair).*

### 7.4.4 HOST / BUS IN for BCL 301*i*

The BCL 301*i* makes available an RS 485 as HOST / BUS IN interface for the connection to the host system. This interface is looped through to the socket or the BUS OUT terminals to connect additional participants.

With its RS 485 interface, the BCL 301*i* is suitable for use in the Leuze multiNet plus scanner network.

| HOST / BUS IN RS 485 (5-pin connector, B-coded) | | | |
|---|---|---|---|
| **MS 301**<br>HOST / BUS IN<br> 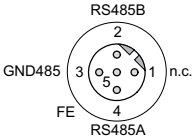 <br><br>**M12 connector (B-coded)**<br>**MK 301**<br> 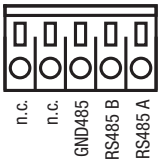 <br><br>**Spring-loaded terminals** | **Pin (M12)** | **Name (terminal)** | **Remark** |
| | 1 | n.c. | Not connected |
| | 2 | RS485 B | RS 485 B - signal line |
| | 3 | GND485 | Reference ground RS 485 - potential equalization |
| | 4 | RS485 A | RS 485 A - signal line |
| | 5 | FE | Functional earth / shield |
| | FE via thread | FE via screw fitting | Functional earth (housing) |

Table 7.4: Pin assignment HOST / BUS IN BCL 301*i*

### 7.4.5 BUS OUT for the BCL 301*i*

The RS 485 interface on the BCL 301*i* is looped through to the socket or the BUS OUT terminals to configure the Leuze multiNet plus network with additional participants.

| BUS OUT RS 485 (5-pin socket, B-coded) | | | |
|---|---|---|---|
| **MS 301**<br>BUS OUT<br> 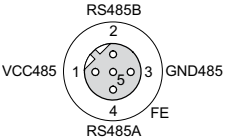 <br><br>**M12 socket (B-coded)**<br>**MK 301**<br> 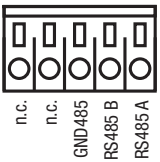 <br><br>**Spring-loaded terminals** | **Pin (M12)** | **Name (terminal)** | **Remark** |
| | 1 | VCC485 | +5 V DC for bus termination |
| | 2 | RS485 B | RS 485 B - signal line |
| | 3 | GND485 | Reference ground RS 485 - potential equalization |
| | 4 | RS485 A | RS 485 A - signal line |
| | 5 | FE | Functional earth / shield |
| | FE via thread | FE via screw fitting | Functional earth (housing) |

Table 7.5: Pin assignment BUS OUTBCL 301*i*

***Notice!***

*Ensure adequate shielding. The entire connection cable must be shielded and earthed. The signal lines must be stranded in pairs.*

#### *Termination of the RS 485 interface on the slave*

On the last network device, the Leuze multiNet plus network (RS 485 interface) must be terminated via a terminating resistor network (See chapter 13 "Type overview and accessories") on the BUS OUT socket or via the activation of the termination via a slide switch in the MK 301 or the MA 100.

***Notice!***

*The bus front on the bus master (MA 31 or BCL 500i) is automatically terminated.*

## 7.5 Leuze multiNet plus

The Leuze multiNet plus is optimized for fast transmission of scanner data to a superior host computer. The multiNet plus consists physically of a two-wire RS 485 interface through which the multiNet plus software protocol is controlled.

This makes wiring the network easy and inexpensive as slaves are looped through to one another in parallel.

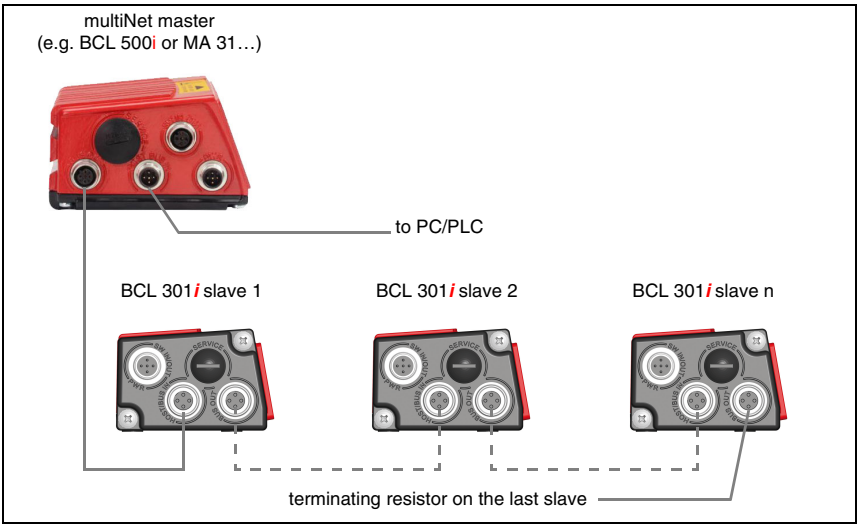


Figure 7.5: Leuze multiNet plus system topology

With the aid of a network master (e.g. BCL 500*i*), up to 31 bar code readers can be networked. For this purpose, the corresponding station address is assigned to every participating BCL 301*i* via the address switch in the MS 301, MK 301 or MA 100. The devices are networked by connecting the individual RS 485 interfaces in parallel.

In the Leuze multiNet plus network, the individual network devices sequentially transfer their data to the network master when requested.

The master then transmits the data of all network devices via its host interface (either an RS 232 or RS 422) to a superior PLC control or to a computer, i.e. it "collects" the scanner data in the network and transmits it to an interface on the host computer. This reduces interface costs (CPs) and time spent programming the software.

### 7.5.1 Wiring the multiNet plus

***Leuze multiNet plus connection hints***

Shielded, twisted pair conductors should be used for the Leuze multiNet plus. This allows a total network length of up to 1200 m.

Recommended network cable (e.g. LiYCY 2x0.2 mm²):

- Twisted pairs, shielded
- Cross section: min. 0.2 mm²
- Copper resistance <100 Ω/km

*When wiring the network, note the following points:*

- The RS 485A and RS 485B cables are looped through in the network and must not in any case be misconnected; the Leuze multiNet plus network is otherwise not functional.
- Connect the shielding to the slaves on both sides with FE and loop it through.
- The maximum cable length in the network is 1200 m.
- The termination is to be switched on at the last participant (MK 301/MA 100) or an external terminator plug is to be mounted (MS 301).

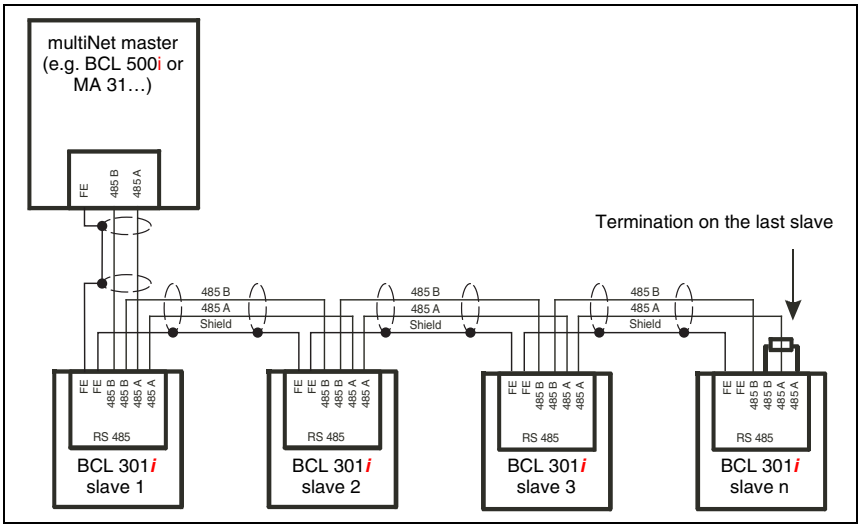


Figure 7.6: Leuze multiNet plus system topology

***Notice!***

Use the recommended connectors / sockets or the ready-made cables and terminating resistors (See chapter 13 "Type overview and accessories").

### 7.5.2 The BCL 301*i* as network slave

The BCL 301*i* bar code readers are specially designed for slave operation in a network. They transmit data to the multiNet master only after the master prompts it to do so and establish the continuing connection via the BUS OUT socket/terminal to the slaves which follow. Only a few parameters need to be set for slave operation (See chapter 10 "Commissioning and configuration"). Network commissioning can thus be performed in very little time.

The connection is performed as shown in chapter 7.4.4 and chapter 7.4.5.

#### *Slave address*

With the BCL 301*i*, the network address, i.e. the corresponding station number of the slave, is set via the address switch in the MS 301, MK 301 or MA 100. The address which is set must be > 0 since the master always has address 0 (**Adr.00**).

Each network device with an address > 0 is thereby automatically informed that it is a slave in the Leuze multiNet plus with this address and that it is initialized and queried by the network master. No other settings are necessary for commissioning in the Leuze multiNet plus.

#### *Other settings*

The parameters necessary for the reading task, such as the code types to be read and the number of digits of the code, must be set. This is done with the help of the webConfig tool.

## 7.6 Cable lengths and shielding

↳ *Observe the following maximum cable lengths and shielding types:*

| Connection | Interface | Max. cable length | Shielding |
|---|---|---|---|
| **BCL – service** | USB | 3m | Shielding absolutely necessary acc. to USB specifications |
| **BCL – host** | RS 232<br>RS 422<br>RS 485 | 10m<br>1200m<br>1200m | Absolutely required, shielded<br>RS 422/485 conductors, stranded in pairs |
| **Network from the first BCL to the last BCL** | RS 485 | 1200m | Absolutely required, shielded<br>RS 485 conductors, stranded in pairs |
| **BCL – power supply unit** | | 30m | Not necessary |
| **Switching input** | | 10m | Not necessary |
| **Switching output** | | 10m | Not necessary |

Table 7.6: Cable lengths and shielding

# 8 Display elements and display

The BCL 300*i* \ BCL 301*i* is available optionally with display, two control buttons and LEDs or with only two LEDs as display elements.

## 8.1 LED indicators BCL 300*i* \ BCL 301*i*

Figure 8.1: BCL 300*i* \ BCL 301*i* - LED indicators

Two multicolor LEDs are used as the primary display instrument. LED functions:

***PWR LED***

| | | |
|---|---|---|
| PWR | **off** | **Device OFF**<br>- no supply voltage |
| PWR | **flashes green** | **Device ok, initialization phase**<br>- no bar code reading possible<br>- voltage connected<br>- self test running<br>- initialization running |
| PWR | **green continuous light** | **Device ok**<br>- bar code reading possible<br>- self test successfully finished<br>- device monitoring active |
| PWR | **green, briefly off - on** | **Good read, successful reading**<br>- bar code(s) successfully read |

| | | |
|---|---|---|
| PWR | **green, briefly off - briefly red - on** | **No read, reading not successful**<br>- bar code(s) not read |
| PWR | **orange continuous light** | **Service mode**<br>- bar code reading possible<br>- configuration via the USB service interface<br>- no data on the host interface |
| PWR | **flashes red** | **Warning set**<br>- bar code reading possible<br>- temporary operating fault |
| PWR | **red continuous light** | **Device error / parameter enable**<br>- no bar code reading possible |

### *BUS LED*

| | | |
|---|---|---|
| BUS | **off** | **No supply voltage**<br>- no communication possible |
| BUS | **flashes green** | **Initialization**<br>- of interfaces (BCL 300*i* standalone)<br>- of the network, slaves waiting for initialization by the master (BCL 301*i* slave) |
| BUS | **green continuous light** | **Operation ok**<br>- interfaces (BCL 300*i* standalone)<br>- network, slaves were initialized by the master (BCL 301*i* slave) |
| BUS | **flashes red** | **Communication error**<br>- network error after initialization by the master (BCL 301*i* slave) |
| BUS | **red continuous light** | **Network error**<br>- slave cannot transmit any more data to the master (BCL 301*i* slave). |

## 8.2 Display BCL 300*i* \ BCL 301*i*

Figure 8.2: BCL 300*i* \ BCL 301*i* - Display

***Notice!***

*The function of the LEDs is identical for the devices with and without display.*

The optional display of the BCL 300*i* \ BCL 301*i* has the following features:

- Monochromatic with background lighting (blue/white)
- Double line, 128 x 32 pixels
- Display language: English

The display is only used as a **display element**. Two buttons can control which values are displayed. In doing so, the upper line displays the selected function and the lower line displays the result.

The background lighting is activated by the push of any button and automatically deactivated after a defined point in time:

### *Display functions*

The following functions can be displayed and activated:

- `Reading result` = result of reading process
- `Decodequality` = quality of decoding process
- `BCL Info` = device status/error code
- `I/O Status` = status of the in/output
- `BCL Address` = bus address of the BCL 301*i*
- `Adjustmode` = alignment mode
- `Version` = software and hardware version

After the voltage is switched off/on, `reading result` is always displayed.

The display is controlled via the two control buttons:

| | | |
|---|---|---|
| ↵ | **ENTER** | **Activate/deactivate the display change function** |
| ▼ | **Down** | **Scroll through functions (downwards)** |

**Example**:

Representation of the `BUS status` on the display:

1. Press button ↵: display flashes
2. Press button ▼: display changes from read result to decoding quality
3. Press button ▼: display changes from decoding quality to device status
4. Press button ▼: display changes from device status to BUS status
5. Press button ↵: bus status is displayed, display stops flashing.

### *Description of the display functions*

```
Reading result
88776655
```

- 1st line: **read result** display function
- 2nd line: code content of the bar code, e.g. **88776655**

```
Decoding quality
84
```

- 1st line: **decoding quality** display function
- 2nd line: decoding quality in percent, e.g. **84**%

```
BCL info
Error code 3201
```

- 1st line: **device status** display function
- 2nd line: error code, e.g. **Error code 3201**

```
I/O status
In = 0 Out = 1
```

- 1st line: input/output **state** display function
- 2nd line: state: 0 =inactive, 1 = active, e.g. **In=0, Out=1**

```
BCL address
25
```

- 1st line: **bus address** display function
- 2nd line: set address, e.g. **25**

```
Adjust mode
73
```

- 1st line: **alignment mode** display function
- 2nd line: decoding quality in percent, e.g. **73**%

```
Version
SW:xxxxx HW:xxx
```

- 1st line: **version** display function
- 2nd line: software and hardware version of the device

# 9 Leuze webConfig tool

With the **Leuze webConfig tool**, an operating system independent, web-technology based, graphical user interface is available for configuring bar code readers of the **BCL 300*i*** series.

Through the use of HTTP as communication protocol and by using only standard technologies on the client side (HTML, JavaScript and AJAX), which are supported by all commonly used, modern browsers (e.g. **Mozilla Firefox** beginning with Version 3.0 or **Internet Explorer** beginning with Version 8.0), it is possible to operate the **Leuze webConfig tool** on any internet-ready PC.

***Notice!***

*The webConfig tool is offered in 5 languages:*

- *German*
- *English*
- *French*
- *Italian*
- *Spanish*

## 9.1 Connecting the SERVICE USB interface

The SERVICE USB interface of the BCL 300*i* \ BCL 301*i* is connected via the PC -side USB interface by means of a standard USB cable, with 1 type A connector and 1 Mini-B type connector.

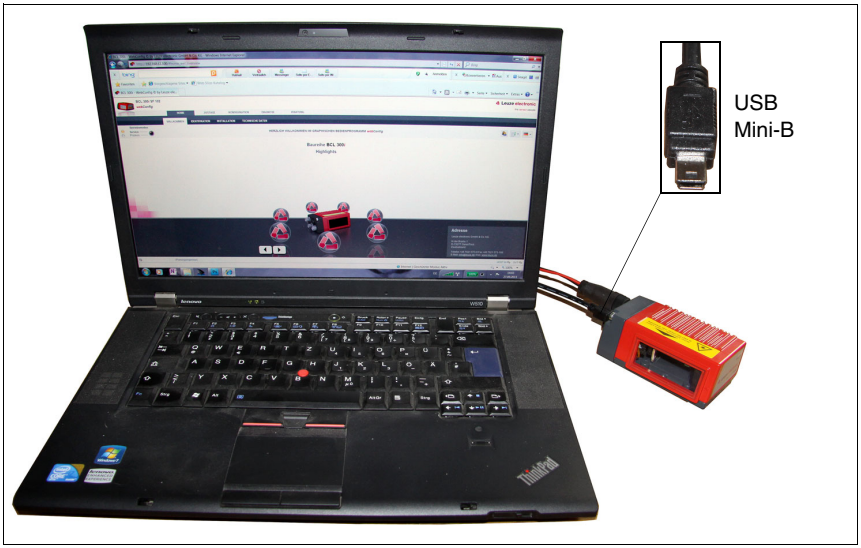


Figure 9.1: Connecting the SERVICE USB interface

## 9.2 Installing the required software

### 9.2.1 System requirements

| | |
|---|---|
| Operating system: | Windows 2000<br>Windows XP (Home Edition, Professional)<br>Windows Vista<br>Windows 7 |
| Computer: | PC with USB interface version 1.1 or higher |
| Graphics card: | min. 1024 x 768 pixels or higher resolution |
| Required hard-disk capacity: | approx. 10MB |

***Notice!***

*Updating the operating system and the browser regularly and installing the current Windows service packs is recommended.*

### 9.2.2 Installing the USB driver

***Notice!***

*If you have already installed a USB driver for a BCL 5xx**i** on your computer, you don't have to install the USB driver for the BCL 300**i** \ BCL 301**i**. In this case, you can also start the webConfig tool of the BCL 300**i** \ BCL 301**i** by double-clicking on the BCL 5xx**i** icon.*

In order for the BCL 300*i* \ BCL 301*i* to be automatically detected by the connected PC, the **USB driver** must be installed **once** on your PC. To do this, you must have **administrator privileges**.

Please proceed according to the following steps:

- *Start your PC with administrator privileges and log on.*
- *Load the CD included in the delivery contents of your BCL 300**i** \ BCL 301**i** in the CD drive and start the "setup.exe" program.*
- *Alternatively, you can also download the setup program from the internet at www.leuze.com.*
- *Follow the instructions provided by the setup program.*

Upon successful installation of the USB driver, an icon with the name **Leuze Web Config** automatically appears on the desktop.

***Notice!***

*If the installation failed, contact your network administrator: The settings of the firewall used may need to be adjusted.*

## 9.3 Starting the webConfig tool

To start the **webConfig tool**, click the icon with the name **Leuze Web Config** located on the desktop. Make certain that the BCL 300*i* \ BCL 301*i* is connected to the PC via the USB interface and that voltage is connected.

***Notice!***

*If you have already installed a USB driver for a BCL 5xx*i* on your computer, you can also start the webConfig tool of the BCL 300*i* \ BCL 301*i* by double-clicking on the BCL 5xx*i* icon.*

Alternatively, you can start the webConfig tool by starting the browser installed on your PC and entering the following IP address: **192.168.61.100**

This is the default Leuze maintenance address for communication with bar code readers of the BCL 300*i* and BCL 500*i* series.

In both cases, the following start page appears on your PC.

Figure 9.2: The start page of the webConfig tool

***Notice!***

*The webConfig tool is completely contained in the firmware of the BCL 300*i* \ BCL 301*i*. Depending on firmware version, the start page may vary from that shown above.*

The individual parameters are – where useful – graphically displayed in order to better illustrate the meaning of the what are often perceived as abstract parameters.

The result is an easy-to-use and practically-oriented user interface!

## 9.4 Short description of the webConfig tool

The webConfig tool has 5 main menus:

- Home
  with information on the connected BCL 300*i* \ BCL 301*i* as well as on installation. This information corresponds to the information in this handbook.
- Alignment
  for manually starting read processes and for aligning the bar code reader. The results of the read processes are displayed immediately. As a result, this menu item can be used to determine the optimum installation location.
- Configuration
  for adjusting decoding, for data formatting and output, switching inputs/outputs, communication parameters and interfaces, etc. …
- Diagnostics
  for event logging of warnings and errors.
- Maintenance
  for updating the firmware.

The user interface of the webConfig tool is largely self-explanatory.

### 9.4.1 Module overview in the Configuration menu

The adjustable parameters of the BCL 300*i* \ BCL 301*i* are clustered in modules in the Configuration menu.

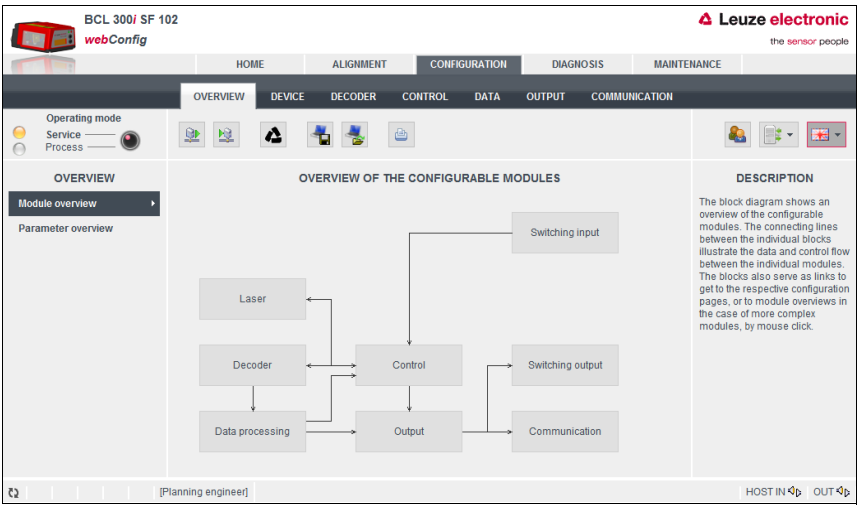


Figure 9.3: Module overview in the webConfig tool

***Notice!***

*The webConfig tool is completely contained in the firmware of the BCL 300i \ BCL 301i. Depending on firmware version, the module overview may vary from that shown above.*

The individual modules and their relationships to one another are graphically displayed in the module overview. The display is context sensitive, i.e. click a module to directly access the corresponding submenu.

***Overview of the configurable modules***

- Device:
  Configuration of the **switching inputs and outputs**
- Decoder:
  Configuration of the decoder table, such as **code type**, **number of digits**, etc.
- Control:
  Configuration of **activation** and **deactivation**, e.g. **auto-activation**, **AutoReflAct**, etc.
- Data:
  Configuration of **code content,** such as **filtering**, **segmentation of bar code data**, etc.
- Output:
  Configuration of **data output**, **header**, **trailer**, **reference code**, etc.
- Communication
  Configuration of the **host interface** and the **service interface**
- Oscillating mirror:
  Configuration of the **oscillating mirror settings**

***Notice!***

*On the right side of the user interface of the webConfig tool, you will find a description of the individual modules and functions as a help text in the **Information** area.*

During commissioning of the BCL 300*i* \ BCL 301*i*, it is recommended that the individual modules be configured in the order presented above. Further information on commissioning can be found in chapter "Commissioning and configuration" on page 107.

# 10 Commissioning and configuration

***Attention Laser!***

*Observe the safety notices in chapter 2!*

This chapter describes basic configuration steps which you can carry out via the webConfig tool.

### *Via the webConfig tool*

The most convenient way to configure the BCL 300*i* \ BCL 301*i* is via the webConfig tool. To use the webConfig tool, you need to establish a USB connection between the BCL 300*i* \ BCL 301*i* and a PC/laptop.

***Notice!***

*Notes on the use of the webConfig tool can be found in chapter 9 "Leuze webConfig tool" on page 102*

## 10.1 BCL 300*i*

### 10.1.1 Measures to be performed prior to the initial commissioning

↳ *Before commissioning, familiarize yourself with the operation and configuration of the BCL 300i.*

↳ *Before connecting the supply voltage, recheck all connections and ensure that they have been properly made.*

The description of the electrical connections can be found in chapter 7.

### 10.1.2 Starting the device

↳ *Connect the 18 … 30 VDC supply voltage.*

The BCL 300*i* sends an '**S**' to the interface as a start-up message and to announce that the device is ready.

The BCL 300*i* works in the standard setting (factory setting) as described below:

- Activation of the reading gate via SWIO_1, the scanning beam becomes visible
- If a bar code is detected, it is output via the RS 232 interface according to the following protocol:
  **<STX><code data><CRT><LF>**
  (9600 Baud, 8 data bits, no parity, 1 stop bit)
- If the BCL 300*i* is equipped with a display, the read bar code content appears on this display.

***Notice!***

*The BCL 300i can decode the following code types in the standard setting:*

- ***Code 128*** *Number of digits 4 … 63*
- ***2/5 Interleaved*** *number of digits 10*
- ***Code 39*** *Number of digits 4 … 30*
- ***EAN 8 / 13*** *Number of digits 8 and 13*
- ***UPC*** *Number of digits 8*
- ***Codabar*** *Number of digits 4 … 63*
- ***Code 93*** *Number of digits 4 … 63*
- ***Code GS1 Data Bar OMNIDIRECTIONAL***
- ***Code GS1 Data Bar LIMITED***
- ***Code GS1 Data Bar EXPANDED***

Deviations from these settings must be set via the webConfig tool. See "Leuze webConfig tool" on page 102.

## 10.2 BCL 301*i* - multiNet plus Slave

### 10.2.1 Measures to be performed prior to the initial commissioning

↳ *Before commissioning, familiarize yourself with the operation and configuration of the BCL 301i.*

↳ *Before connecting the supply voltage, recheck all connections and ensure that they have been properly made.*

The description of the electrical connections can be found in chapter 7.

### 10.2.2 Starting the device

↳ *Via the address switch, activate the address assigned to the BCL 301i in Leuze multiNet .*

↳ *Connect the 18 … 30 VDC supply voltage.*

The BCL 301*i* registers itself automatically in Leuze multiNet, then the LED **BUS** lights up green. The BCL 301*i* sends an '**S**' via the interface to the master as a start-up message and to inform that the device is ready.

The BCL 301*i* works in the standard setting (multiNet mode, factory setting) as described below:

- Activation of the reading gate via SWIO_1, the scanning beam becomes visible.
- If a bar code is detected, it is sent to the master via Leuze multiNet.
- If the BCL 301*i* is equipped with a display, the read bar code content appears on this display.

***Notice!***

*The BCL 301i can decode the following code types in the standard setting:*

- ***Code 128*** *Number of digits 4 … 63*
- ***2/5 Interleaved*** *number of digits 10*
- ***Code 39*** *Number of digits 4 … 30*
- ***EAN 8 / 13*** *Number of digits 8 and 13*
- ***UPC*** *Number of digits 8*
- ***Codabar*** *Number of digits 4 … 63*
- ***Code 93*** *Number of digits 4 … 63*
- ***Code GS1 Data Bar OMNIDIRECTIONAL***
- ***Code GS1 Data Bar LIMITED***
- ***Code GS1 Data Bar EXPANDED***

Deviations from these settings must be set via the webConfig tool. See "Leuze webConfig tool" on page 102.

***Notice!***

*Permissible values for the network address in the Leuze multiNet plus are 1 … 31. Make certain that a different address is assigned to each multiNet plus participant.*

*From the device address > 0 set, the BCL 301i detects that networking is required. It automatically switches to the Leuze multiNet plus network and waits for initialization by the master.*

## 10.3 Additional settings for the BCL 300i and the BCL 301i

After the basic configuration of the operating mode and the communication parameters, you need to carry out further settings via the webConfig tool:

- Decoding and processing the read data
- Control of the decoding
- Control of the switching outputs

### 10.3.1 Decoding and processing the read data

The BCL 300i \ BCL 301i offers the following options:

- Setting the number of labels to be decoded for each reading gate (0 … 64). This is done via the `Max. no. of labels` parameter.
- Definition of up to 8 different code types. Labels that match one of the defined code types are decoded. Further parameters can be set for each code type:
  - The code type (`symbology`).
  - The `Number of digits`: either up to 5 different numbers of digits (e.g., 10, 12, 16, 20, 24), or a range (`Interval mode`) and up to three additional numbers of digits (e.g., 2 … 10, 12, 16, 26).
  - The `Reading reliability`: the set value specifies how many times a label must be read and decoded with the same result before the result is accepted as valid.
  - Additional code type specific settings (in the webConfig tool only).
  - `Check digit method` used for decoding as well as the type of `Check digit output` for the read result. The two possibilities for the latter are `Standard` (corresponds to the standard for the selected code type/symbology) and not `Standard`.

↳ *Define at least one code type with the desired settings.*

- Via webConfig:
  `Configuration -> Decoder`

### *Data processing via the webConfig tool*

In the Data and Output submenus of the Configuration main menu, the webConfig tool provides extensive data processing options to adapt the functionality of the BCL 300*i* \ BCL 301*i* to the specific reading task:

- Data filtering and segmentation in the Data submenu:
  - Data filtering according to characteristics for handling identical bar code information
  - Data segmentation for differentiating between identifier and content of the read data
  - Data filtering according to content and/or identifier in order to suppress the output of bar codes with specific content/identifiers
  - Completeness inspection of the read data
- Sorting and formatting the output data in the Output submenu:
  - Configuration of up to 3 different sorting criteria. Sorting by physical data and content of the read bar codes.
  - Formatting of the data output for the HOST.
  - Formatting of the data output for the display.

### 10.3.2 Control of the decoding

In general, decoding is controlled via one or more of the configurable switching inputs/ outputs. For this purpose, the respective connection to the SW IN/OUT and POWER interfaces must be configured as a switching input.

Via a switching input, you can:

- start decoding
- stop decoding
- start decoding and then stop decoding after a configurable time period
- read a reference code
- start the automatic code type configuration (AutoConfig)

↳ *Connect the required control devices (photoelectric sensor, proximity switch, etc.) as described in chapter 7 to the BCL 300i \ BCL 301i.*

↳ *Configure the connected switching inputs according to your requirements. To do this, first set the I/O mode to Input and then configure the switching behavior:*

- Via webConfig:
  `Configuration -> Device -> Switching inputs/outputs`

***Notice!***

*Alternatively, one can also activate decoding via the online command '+' and deactivate it via the online command '-'. Further information on the online commands can be found in chapter 11.*

#### *Advanced decoder control via the webConfig tool*

The webConfig tool provides advanced functions, in particular for deactivating decoding. These may be accessed via the `Control` submenu of the `Configuration` main menu. You can:

- activate decoding automatically (delayed)
- stop decoding after a maximum reading gate time
- stop decoding via the completeness mode, if:
  - the maximum number of bar codes to be decoded has been decoded
  - a positive reference code comparison has taken place.

### 10.3.3 Control of the switching outputs

By using the switching inputs/outputs of the BCL 300*i* \ BCL 301*i*, external event-controlled functions can be implemented without assistance from the superior process control. For this purpose, the respective connection at the SW IN/OUT and POWER interfaces must be configured as a switching output.

A switching output can be activated:

- at the start/end of the reading gate
- depending on the read result:
  - reference code comparison positive/negative
  - read result valid/invalid
- depending on the state of the device:
  - ready/not ready
  - data transmission active/not active
  - active/standby
  - error/no error
- etc.

↳ *As described in chapter 7 of the manual, connect the required switching outputs.*

↳ *Configure the connected switching outputs according to your requirements. To do this, first set the I/O mode to Output and then configure the switching behavior:*

- Via webConfig:
  `Configuration -> Device -> Switching inputs/outputs`

## 10.4 Transmitting configuration data

Instead of going through the tedious task of configuring every parameter of the BCL 300*i* \ BCL 301*i* individually, you can also conveniently transfer configuration data.

Configuration data can be transferred between two bar code readers BCL 300*i* \ BCL 301*i* as follows:

- Storage in a file and transfer using the webConfig tool

### 10.4.1 Via the webConfig tool

With the webConfig tool, you can store entire configurations of the BCL 300*i* \ BCL 301*i* on data carriers and transfer them from these to the BCL 300*i* \ BCL 301*i*.

This storage of configuration data is especially useful if you want to store basic configurations which will require only minor changes.

In the webConfig tool, you store the configuration data via the buttons in the upper part of the middle window of all submenus of the Configuration main menu.

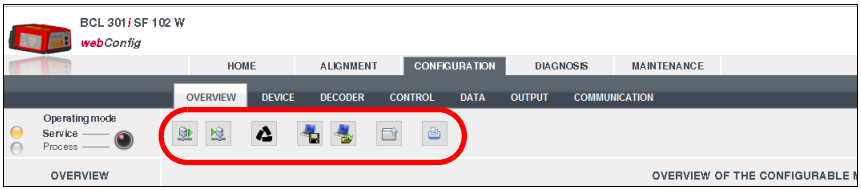


Figure 10.1: Storing configuration data in the webConfig tool

### 10.4.2 Replacing a defective BCL 300*i* \ BCL 301*i*

The MS 300/MS 301 hoods with integrated connectors and the MK 300/MK 301 terminal hoods feature an integrated parameter memory in which the configuration data is saved as a backup. If a defective BCL 300*i* \ BCL 301*i* has to be replaced, proceed as follows:

- *Disconnect the defective BCL 300i \ BCL 301i from the voltage supply.*
- *Dismount the defective BCL 300i \ BCL 301i and disconnect it from the hoods with integrated connectors/terminal hoods.*
- *Connect the new BCL 300i \ BCL 301i to the connection hood and remount the unit.*
- *Recommission the new BCL 300i \ BCL 301i (reconnect the voltage supply).*
  *The configuration is now imported from the external parameter memory of the connection hood and the BCL 300i \ BCL 301i is immediately operational without any further configuration.*

# 11 Online commands

## 11.1 Overview of commands and parameters

Online commands can be used to send commands directly to the device for control and configuration.

For this purpose, the BCL 300*i* \ BCL 301*i* must be connected to a host- or service computer via the interface. The commands described can be sent either via the host or the service interface.

### *Online commands*

With the commands, you can:

- control/decode.
- read/write/copy parameters.
- carry out an automatic configuration.
- teach-in/set reference codes.
- call up error messages.
- call up statistical device information.
- carry out a software reset in order to reinitialize the device.

### *Syntax*

"Online" commands consist of one or two ASCII characters followed by command parameters.

No separation characters may be entered between the command and the command parameter(s). Both small and capitalized letters can be used.

Example:

Command **'CA'**: autoConfig function

Parameter **'+'**: Activation

Transmitted is: **'CA+'**

### *Notation*

Commands, command parameters and returned data are enclosed between single quotation marks ' ' in the text of this manual.

Most online commands are acknowledged by the BCL 300*i* \ BCL 301*i* and any requested data returned. For commands that are not acknowledged, command execution can be observed or monitored directly on the device.

### 11.1.1 General 'online' commands

***Software version number***

| Command | ’V’ |
|---|---|
| **Description** | Requests device version information |
| **Parameter** | no |
| **Acknowledgment** | **'BCL 300i SM 100 V 1.3.8 2008-02-15'**<br>The first line contains the device type of the BCL 300*i* \ BCL 301*i*, followed by the device version number and version date. (The data which is actually displayed may vary from the values given here.) |

***Notice!***

*This command returns the major release number of the software packet. This major release number also appears on the display during start-up.*
*This command can be used to check whether the connected host or service computer is properly connected and configured. If you do not receive an acknowledgment, please check interface connections, protocol and service switches.*

***Software reset***

| Command | ’H’ |
|---|---|
| **Description** | Carries out a software reset. The device is restarted and reinitialized, leaving it in the same state as when the supply voltage is switched on. |
| **Parameter** | no |
| **Acknowledgment** | **’S’** (start signal) |

### *Code recognition*

| Command | 'CC' |
|---|---|
| **Description** | Detects an unknown bar code and outputs number of digits, code type, and code information to the interface, without storing the bar code in the parameter memory. |
| **Parameter** | no |
| **Acknowledg-ment** | **'xx yy zzzzzz'**<br>**xx**: Code type of the read code<br>**'01'** 2/5 Interleaved<br>**'02'** Code 39<br>**'03'** Code 32<br>**'06'** UPC (A, E)<br>**'07'** EAN<br>**'08'** Code 128, EAN 128<br>**'10'** EAN Addendum<br>**'11'** Codabar<br>**'12'** Code 93<br>**'13'** GS1 DataBar OMNIDIRECTIONAL<br>**'14'** GS1 DataBar LIMITED<br>**'15'** GS1 DataBar EXPANDED<br>**yy**: Number of digits of the read code<br>**zzzzzz**: Contents of the decoded label. A ↑ appears if the label was not correctly read. |

### *autoConfig*

| Command | 'CA' |
|---|---|
| **Description** | Activates or deactivates the 'autoConfig' function. BCL 300*i* \ BCL 301*i* Certain label reading parameters are programmed automatically in the setup by the labels which are read while the 'autoConfig' function is active. |
| **Parameter** | **'+'** Activates 'autoConfig'<br>**'/'** Rejects the last code read<br>**'-'** Deactivates 'autoConfig' and stores the decoded data in the current parameter set. |
| **Acknowledgment** | **'CSx'**<br>**x** Status<br>**'0'** Valid **'CA'** command<br>**'1'** Invalid command<br>**'2'** autoConfig could not be activated<br>**'3'** autoConfig could not be deactivated<br>**'4'** Result could not be deleted |
| **Description** | **'xx yy zzzzzz'**<br>**xx** No. of digits of the read code<br>**yy** Code type of the read code<br>**'01'** 2/5 Interleaved<br>**'02'** Code 39<br>**'03'** Code 32<br>**'06'** UPC (A, E)<br>**'07'** EAN<br>**'08'** Code 128, EAN 128<br>**'10'** EAN Addendum<br>**'11'** Codabar<br>**'12'** Code 93<br>**'13'** GS1 DataBar OMNIDIRECTIONAL<br>**'14'** GS1 DataBar LIMITED<br>**'15'** GS1 DataBar EXPANDED<br>**zzzzzz**: Contents of the decoded label. A ↑ appears if the label was not correctly read. |

### *Alignment mode*

| Command | ’JP’ |
|---|---|
| **Description** | This command simplifies mounting and alignment of the BCL 300*i* \ BCL 301*i*. After activating the function with **’JP+’**, the BCL 300*i* \ BCL 301*i* continuously supplies status information to the serial interfaces.<br>With this online command, the scanner is set to terminate the decoding after 100 successfully decoded labels and output the status information. Subsequently, the read process is reactivated automatically.<br>In addition to the output of the status information, the laser beam is used to display the reading quality. Depending on how many read results could be extracted, the duration of the laser's "off" time increases.<br>If the reading quality is high, the laser beam flashes in brief, regular intervals. The worse the decoder decodes, the longer the pauses become during which the laser is switched off. The flashing intervals become more and more irregular because the laser may, in total, be active for longer to extract more labels. The duration of the pauses has been stepped in such a way that they can be distinguished by the eye. |
| **Parameter** | **’+’**: Starts the adjustment mode.<br>**’-’**: Ends the adjustment mode. |
| **Acknowledgment** | **’yyy_zzzzzz’**<br>**yyy**: Reading quality in %. A high process availability is ensured at read qualities > 75%.<br>**zzzzzz**: Bar code information. |

### *Manual definition of the reference code*

| Command | RS |
|---|---|
| **Description** | This command can be used to define a new reference code in the BCL 300*i* \ BCL 301*i* by means of direct input via the serial interface. The data is saved in the parameter set according to your input under reference code 1 through 2 and stored in the working buffer for direct further processing. |
| **Parameter** | **'RSyvxxzzzzzzzz'**<br>**y**, **v, x** and **z** are placeholders (variables) for the actual input.<br>**y** Defined reference code no.<br>**'1'** (Code 1)<br>**'2'** (Code 2)<br>**v** Storage location for reference code:<br>**'0'** RAM+EEPROM,<br>**'3'** RAM only<br>**xx** Defined code type (see command 'CA')<br>**z** Defined code information (1 … 63 characters) |
| **Acknowledgment** | **'RSx'**<br>**x** Status<br>**'0'** Valid '**Rx**' command<br>**'1'** Invalid command<br>**'2'** Insufficient memory for reference code<br>**'3'** Reference code has not been saved<br>**'4'** Reference code invalid |
| **Example** | Input = 'RS130678654331' (Code 1 (1), RAM only (3), UPC (06), code information) |

### *Reference code teach-in*

| Command | 'RT' |
|---|---|
| **Description** | This command enables a reference code to be defined quickly by reading an example label. |
| **Parameter** | **'RTy'**<br>**y** Function<br>**'1'** Defines reference code 1<br>**'2'** Defines reference code 2<br>**'+'** Activates the definition of reference code 1 up to the value of Parameter no_of_labels<br>**'-'** Exits the Teach-in process |
| **Acknowledgment** | The BCL 300*i* \ BCL 301*i* first responds with the command **'RS'** and corresponding status (see command 'RS'). After a bar code has been read, it sends the result in the following format:<br>**'RCyvxxzzzzz'**<br>**y**, **v, x** and **z** are placeholders (variables) for the actual input.<br>**y** Defined reference code no.<br>**'1'** (Code 1)<br>**'2'** (Code 2)<br>**v** Memory location for reference code<br>**'0'** RAM+EEPROM,<br>**'3'** RAM only<br>**xx** Defined code type (see command 'CA')<br>**z** Defined code information (1 … 63 characters) |

***Notice!***

*With this function, only code types are recognized that are identified using the autoConfig function or which were set in the setup.*

↳ *After each reading via an 'RTy' command, explicitly switch off the function again since failure to do so will interfere with other commands as well as prevent execution of a new 'RTx' command.*

### *Reading a reference code*

| Command | ’RR’ |
|---|---|
| **Description** | The command reads out the reference code defined in the BCL 300*i* \ BCL 301*i*. If no parameters are specified, all defined codes are output. |
| **Parameter** | <Reference code number><br>**’1’ … ’2’** value range of reference codes 1 to 2 |
| **Acknowledgment** | If no reference codes are defined, the BCL 300*i* \ BCL 301*i* responds with the **’RS’** command and corresponding status (see command ’RS’)**.**<br>For valid codes, the output corresponds to the following format:<br>**RCyvxxzzzzzz**<br>**y**, **v, x** and **z** are placeholders (variables) for the actual input.<br>**y** Defined reference code no.<br>**’1’** (Code 1)<br>**’2’** (Code 2)<br>**v** Memory location for reference code<br>**’0’** RAM+EEPROM,<br>**’3’** RAM only<br>**xx** Defined code type (see command ’CA’)<br>**z** Defined code information (1 … 63 characters) |

### 11.1.2 'Online' commands for system control

***Activating sensor input***

| Command | '+' |
|---|---|
| **Description** | The command activates decoding. This command is used to activate the reading gate. It remains active until it is deactivated by one of the following criteria:<br>• Deactivation by a manual command<br>• Deactivation by a switching input<br>• Deactivation upon reaching the specified read quality (equal scans)<br>• Deactivation by timeout<br>• Deactivation upon reaching a preset number of scans without information. |
| **Parameter** | no |
| **Acknowledgment** | None |

***Deactivating sensor input***

| Command | '-' |
|---|---|
| **Description** | The command deactivates decoding. This command can be used to deactivate the reading gate. Following deactivation, the read result is output. Because the reading gate was manually deactivated and, thus, no GoodRead criterion was met, a NoRead is output. |
| **Parameter** | no |
| **Acknowledgment** | None |

### 11.1.3 ’Online’ commands for configuration of switching inputs/outputs

***Activate switching output***

| Command | ’OA’ |
|---|---|
| **Description** | The switching outputs 1 and 2 can be activated with this command. The respective port must have been configured as a switching output. The logic state is output, i.e., an inverted logic is taken into account (e.g., inverted logic and a state of High corresponds to a voltage of 0 V at the switching output). |
| **Parameter** | **’OA<a>’**<br>**<a>** Selected switching output [1, 2], unit (dimensionless) |
| **Acknowledgment** | None |

***Query the state of the switching outputs***

| Command | ’OA’ |
|---|---|
| **Description** | This command may be used to query the states of the switching inputs and outputs that are configured as a switching output and that have been set via commands. The logic state is output, i.e., an inverted logic is taken into account (e.g., inverted logic and a state of High corresponds to a voltage of 0 V at the switching output). |
| **Parameter** | **’OA?’** |
| **Acknowledgment** | **’OA S1=<a>;S2=<a>’**<br>**<a>** State of the switching outputs<br>**’0’** Low<br>**’1’** High<br>**’I’** Configuration as switching input<br>**’P’** Passive configuration |

### *Set the state of the switching outputs*

| Command | ’OA’ |
|---|---|
| **Description** | This command is used to set the states of the switching inputs/outputs that are configured as a switching output. The logic state is specified, i.e., an inverted logic is taken into account (e.g., inverted logic and a state of High corresponds to a voltage of 0 V at the switching output). The values of the switching inputs/outputs that are not configured as switching outputs are ignored. You may also use only a selection of the existing switching inputs/outputs as long as these are listed in ascending order. |
| **Parameter** | **’OA [S1=<a>][;S2=<a>]’**<br>**<a>** State of the switching output<br>**’0’** Low<br>**’1’** High |
| **Acknowledgment** | **’OA=<aa>’**<br>**<aa>** Status acknowledgment, unit (dimensionless)<br>**’00’** ok<br>**’01’** Syntax error<br>**’02’** Parameter error<br>**’03’** Other error |

### *Deactivate switching output*

| Command | ’OD’ |
|---|---|
| **Description** | The switching outputs 1 and 2 can be deactivated with this command. The respective port must have been configured as a switching output. The logic state is output, i.e., an inverted logic is taken into account (e.g., inverted logic and a state of High corresponds to a voltage of 0 V at the switching output). |
| **Parameter** | **’OD<a>’**<br>**<a>** Selected switching output [1, 2], unit (dimensionless) |
| **Acknowledgment** | None |

### *Query the configuration of the switching inputs/outputs*

| Command | ’OF’ |
|---|---|
| **Description** | This command may be used to query the configuration of the switching inputs/outputs 1 and 2. |
| **Parameter** | **’OF?’** |
| **Acknowledgment** | **’OF S1=<a>;S2=<a>’**<br>**<a>** Function of the switching input/ output, unit [dimensionless]’<br>**’I’** Switching input<br>**’O’** Switching output<br>**’P’** Passive |

### *Configure the switching inputs/ outputs*

| Command | ’OF’ |
|---|---|
| **Description** | This command may be used to configure the function of the switching inputs/outputs 1 and 2. You may also use only a selection of the existing switching inputs/outputs as long as these are listed in ascending order. |
| **Parameter** | **’OF [S1=<a>][;S2=<a>]’**<br>**<a>** Function of the switching input/ output, unit [dimensionless]’<br>**’I’** Switching input<br>**’O’** Switching output<br>**’P’** Passive |
| **Acknowledgment** | **’OF=<bb>’**<br>**<bb>** Status acknowledgment<br>**’00’** ok<br>**’01’** Syntax error<br>**’02’** Parameter error<br>**’03’** Other error |

### 11.1.4 ’Online’ commands for the parameter set operations

***Copying parameter set***

| Command | ’PC’ |
|---|---|
| **Description** | This command can only be used to copy parameter sets in their entirety. This can be used to replicate the three parameter sets **default**, **permanent** and **operating parameters** on the basis of one another. In addition, this command can also be used to restore the factory settings. |
| **Parameter** | **’PC<Source type><Target type>’**<br>**<Source type>** Parameter data set which is to be copied, unit [dimensionless]<br>**'0'** Parameter data set in permanent memory<br>**'2'** Default or factory parameter set<br>**'3'** Operating parameter data set in volatile memory<br>**<Target type>** Parameter set to which the data is to be copied, unit [dimensionless]<br>**'0'** Parameter data set in permanent memory<br>**'3'** Operating parameter data set in volatile memory<br>Permissible combinations here include:<br>**'03'** Copying the data set from the permanent memory to the operating parameter data set<br>**'30'** Copying the operating parameter data set to the permanent parameter set memory<br>**'20'** Copying the default parameters to the permanent memory and to the main memory |
| **Acknowledgment** | **’PS=<aa>’**<br>**<aa>** Status acknowledgment, unit [dimensionless]<br>**’00’** Ok<br>**’01’** Syntax error<br>**’02’** Impermissible command length<br>**’03’** Reserved<br>**’04’** Reserved<br>**’05’** Reserved<br>**’06’** Impermissible combination, source type - target type |

### *Requesting parameter data set from BCL 300i \ BCL 301i*

### *Determining parameter set difference to default parameters*

| Command | ’PR’ |
|---|---|
| **Description** | The parameters of the BCL 300*i* \ BCL 301*i* are grouped together in a parameter set and permanently stored in memory. There is one parameter set in permanent memory and one operating parameter set in volatile memory; in addition, there is a default parameter set (factory parameter set) for initialization. This command can be used to edit the first two parameter sets (in permanent and volatile memory). A check sum can be used for reliable parameter transfer. |
| **Parameter** | **’PR<BCC type><PS type><Address><Data length>[<BCC>]’**<br>**<BCC type>** Check-digit function during transfer, unit [dimensionless]<br>**’0’** Not used<br>**’3’** BCC mode 3<br>**<PS type>** Memory from which the values are to be read, unit [dimensionless]<br>**’0’** Parameter values stored in the flash memory<br>**’1’** Reserved<br>**’2’** Default values<br>**’3’** Operating values in RAM<br>**<Address>** Relative address of the data within the data set<br>**’aaaa’** Four-digit, unit [dimensionless]<br>**<Data length>** Length of the parameter data to be transferred<br>**’bbbb’** Four-digit, unit [length in bytes]<br>**<BCC>** Check sum calculated as specified under BCC type |

| Command | 'PR' |
|---|---|
| **Acknowledgment** positive | **PT<BCC type><PS type><Status><Start><br><Address parameter value><Address+1 parameter value>…<br>[;<Address><Address parameter value>][<BCC>]**<br>**<BCC type>** Check-digit function during transfer, unit [dimensionless]<br>**'0'** Not used<br>**'3'** BCC mode 3<br>**<PS type>** Memory from which the values are to be read, unit [dimensionless]<br>**'0'** Parameter values stored in the flash memory<br>**'2'** Default values<br>**'3'** Operating values in RAM<br>**<Status>** Mode of parameter processing, unit [dimensionless]<br>**'0'** No further parameters<br>**'1'** Additional parameters follow<br>**<Start>** Relative address of the data within the data set,<br>**'aaaa'** Four-digit, unit [dimensionless]<br>**<P.value A.>** Parameter value of the parameter stored at this address; the parameter set data **'bb'** is converted from HEX format to a 2-byte ASCII-format for transfer.<br>**<BCC>** Check sum calculated as specified under BCC type |
| **Acknowledgment** negative | **'PS=<aa>'**<br>Parameter reply:<br>**<aa>** Status acknowledgment, unit [dimensionless]<br>**'01'** Syntax error<br>**'02'** Impermissible command length<br>**'03'** Impermissible value for checksum type<br>**'04'** Invalid check sum received<br>**'05'** Impermissible number of data requested<br>**'06'** Requested data does not (any longer) fit in the transmission buffer<br>**'07'** Impermissible address value<br>**'08'** Read access after end of data set<br>**'09'** Impermissible QPF data set type |

| Command | ’PD’ |
|---|---|
| **Description** | This command outputs the difference between the default parameter set and the operating parameter set or the difference between the default parameter set and the permanent parameter set.<br><br>**Comment**:<br>The reply supplied by this command can e.g. be directly used for programming a device with factory settings, whereby this device receives the same configuration as the device on which the PD-sequence was executed. |
| **Parameter** | **’PD<P.set1><P.set2>’**<br>**<P.set1>** Parameter data set which is to be copied, unit [dimensionless]<br>**’0’** Parameter data set in permanent memory<br>**’2’** Default or factory parameter set<br>**<P.set2>** Parameter set to which the data is to be copied, unit [dimensionless]<br>**’0’** Parameter data set in permanent memory<br>**’3’** Operating parameter data set in volatile memory<br>Permissible combinations here include:<br>**’20’** Output of the parameter differences between the default and the permanently saved parameter set<br>**’23’** Output of the parameter differences between the default parameter set and the operating parameter set saved in volatile memory<br>**’03’** Output of the parameter differences between the permanent parameter set and the operating parameter set saved in volatile memory |
| **Acknowledgment** positive | **PT<BCC><PS type><Status><Adr.><P.value adr.><P.valueAdr.+1>… [;<Adr.><P.value adr.>]**<br>**<BCC>**<br>**’0’** No check digit<br>**’3’** BCC mode 3<br>**<PS type>**<br>**’0’** Values stored in flash memory<br>**’3’** Operating values stored in RAM<br>**<Status>**<br>**’0’** No further parameters<br>**’1’** Additional parameters follow<br>**<Adr.>** Relative address of the data within the data set<br>**’aaaa’** Four-digit, unit [dimensionless]<br>**<P.value>** Parameter value of the -bb- parameter stored at this address. The parameter set data is converted from HEX format to a 2-byte-ASCII format for transfer. |

| Command | ’PD’ |
|---|---|
| **Acknowledgment** negative | **’PS=<aa>’**<br>**<aa>** Status acknowledgment, unit [dimensionless]<br>**’0’** No difference<br>**’1’** Syntax error<br>**’2’** Impermissible command length<br>**’6’** Impermissible combination, parameter set 1 and parameter set 2<br>**’8’** Invalid parameter set |

### *Writing parameter set*

| Command | 'PT' |
|---|---|
| **Description** | The parameters of the BCL 300*i* \ BCL 301*i* are grouped together in a parameter set and permanently stored in memory. There is one parameter set in permanent memory and one operating parameter set in volatile memory; in addition, there is a default parameter set (factory parameter set) for initialization. This command can be used to edit the first two parameter sets (in permanent and volatile memory). A check sum can be used for reliable parameter transfer. |
| **Parameter** | **PT<BCC type><PS type><Status><Adr.><P.value adr.><br><P.value adr+1>…[;<Adr.><P.value adr.>][<BCC>]**<br>**<BCC type>** Check-digit function during transfer, unit [dimensionless]<br>**'0'** No check digit<br>**'3'** BCC mode 3<br>**<PS type>** Memory from which the values are to be read, unit [dimensionless]<br>**'0'** Parameter values stored in the flash memory<br>**'3'** Operating values stored in RAM<br>**<Status>** Mode of parameter processing, without function here, unit [dimensionless]<br>**'0'** No reset after parameter change, no further parameters<br>**'1'** No reset after parameter change, additional parameters follow<br>**'2'** With reset after parameter change, no further parameters<br>**'6'** Set parameters to factory setting, no further parameters<br>**'7'** Set parameters to factory settings, lock all code types; the code-type setting must follow in the command!<br>**<Adr.>** Relative address of the data within the data set,<br>**'aaaa'** Four-digit, unit [dimensionless]<br>**<P.value>** Parameter value of the -bb- parameter stored at this address. The parameter set data is converted from HEX format to a 2-byte-ASCII format for transfer.<br>**<BCC>** Check sum calculated as specified under BCC type |

| Command | 'PT' |
|---|---|
| **Acknowledgment** | **'PS=<aa>'**<br>Parameter reply:<br>**<aa>** Status acknowledgment, unit [dimensionless]<br>**'01'** Syntax error<br>**'02'** Impermissible command length<br>**'03'** Impermissible value for checksum type<br>**'04'** Invalid check sum received<br>**'05'** Impermissible data length<br>**'06'** Invalid data (parameter limits violated)<br>**'07'** Invalid start address<br>**'08'** Invalid parameter set<br>**'09'** Invalid parameter set type |

# 12 Diagnostics and troubleshooting

## 12.1 General causes of errors

| Error | Possible error cause | Measures |
|---|---|---|
| Status LED **PWR** | | |
| Off | • No supply voltage connected to the device<br>• Hardware error | ☐ Check supply voltage<br>☐ Send device to customer service |
| Red, flashing | • Warning | ☐ Query diagnostic data and carry out the resulting measures |
| Red, continuous light | • Error: no function possible | ☐ Internal device error, send in device |
| Orange, continuous light | • Device in service mode | ☐ Reset service mode with webConfig tool |
| Status LED **BUS** | | |
| Off | • No supply voltage connected to the device<br>• Hardware error | ☐ Check supply voltage<br>☐ Send device to customer service |
| Red, flashing | • Communication error<br>• With slave: network error<br>• With master: network error following initialization | ☐ Check interface<br>☐ Check interface, addressing and el. connection of the slave<br>☐ Check interface, addressing and el. connection of the slave |
| Red, continuous light | • No communication<br>• Incorrect wiring<br>• Incorrect address | ☐ Check interface<br>☐ Check wiring<br>☐ Check addressing |
| Orange, flashing | • Timeout -> Error on interface | ☐ Check interface wiring |

Table 12.1: General causes of errors

## 12.2 Interface errors

| Error | Possible error cause | Measures |
|---|---|---|
| No communication via USB service interface | • Incorrect connection cable<br>• Connected BCL 300*i* \ BCL 301*i* is not detected | ☐ Check connection cable<br>☐ Install USB driver |
| No communication via RS 232 / RS 422/ RS 485 | • Incorrect wiring<br>• Different baud rates<br>• Different protocol settings | ☐ Check wiring<br>☐ Check baud rate<br>☐ Check protocol settings |
| Sporadic errors on the RS 232 / RS 422 / RS 485 interface | • Incorrect wiring<br>• Effects due to EMC<br>• Overall network expansion exceeded | ☐ Check wiring<br>• In particular, check wire shielding<br>• Check the cable used<br>☐ Check shielding (shield covering in place up to the clamping point)<br>☐ Check grounding concept and connection to functional earth (FE)<br>☐ Avoid EMC coupling caused by power cables laid parallel to device lines.<br>☐ Check max. network expansion as a function of the max. cable lengths |

Table 12.2: Interface error

***Notice!***

*Please use **chapter 12 as a master copy** should servicing be required.*
*Cross the items in the "Measures" column which you have already examined, fill out the following address field and fax the pages together with your service contract to the fax number listed below.*

***Customer data (please complete)***

| | |
|---|---|
| **Device type:** | |
| **Company:** | |
| **Contact partner / department:** | |
| **Phone (direct):** | |
| **Fax:** | |
| **Street / No:** | |
| **ZIP code/City:** | |
| **Country:** | |

***Leuze Service fax number:***

**+49 7021 573 - 199**

# 13 Type overview and accessories

## 13.1 Part number code

**BCL 300i OM100D H**

| | | |
|---|---|---|
| Heating option | H = | With heating |
| Display option | D = | With display and two control button |
| Beam exit | 0 | Lateral |
| | 2 | Front |
| Optics | N | High Density (near) |
| | M | Medium Density (medium distance) |
| | F | Low Density (remote) |
| | L | Long Range (very large distances) |
| Scanning principle | S | Line scanner (single line) |
| | R1 | Line scanner (raster) |
| | O | Oscillating-mirror scanner |
| | *i* = | Integrated fieldbus technology |
| Interface | 00 | RS 232/RS 422 (standalone) |
| | 01 | RS 485 (multiNet Slave) |
| | 04 | PROFIBUS DP |
| | 08 | ETHERNET TCP/IP, UDP |
| | 48 | PROFINET-IO RT |
| | BCL | Bar code reader |

Table 13.1: Part number codeBCL 300*i* \ BCL 301*i*

ПРОМЭЛЕКТРОНИКА / sales@prom-elec.com

## 13.2 BCL 300*i*

Standalone device with 1 x RS 232/RS 422 interface:

| Type designation | Description | Part no. |
|---|---|---|
| **Single line scanner with frontal beam exit** | | |
| BCL 300*i* S N 102 | with N optics | 50116226 |
| BCL 300*i* S M 102 | with M optics | 50116220 |
| BCL 300*i* S F 102 | with F optics | 50116208 |
| BCL 300*i* S L 102 | with L optics | 50116214 |
| BCL 300*i* S N 102 D | with N optics and display | 50116225 |
| BCL 300*i* S M 102 D | with M optics and display | 50116219 |
| BCL 300*i* S F 102 D | with F optics and display | 50116207 |
| BCL 300*i* S L 102 D | with L optics and display | 50116213 |
| BCL 300*i* S N 102 D H | with N optics, display and heating | 50116224 |
| BCL 300*i* S M 102 D H | with M optics, display and heating | 50116218 |
| BCL 300*i* S F 102 D H | with F optics, display and heating | 50116206 |
| BCL 300*i* S L 102 D H | with L optics, display and heating | 50116212 |
| **Raster scanner with frontal beam exit** | | |
| BCL 300*i* R1 N 102 | with N optics | 50116202 |
| BCL 300*i* R1 M 102 | with M optics | 50116198 |
| BCL 300*i* R1 F 102 | with F optics | 50116194 |
| BCL 300*i* R1 N 102 D | with N optics and display | 50116201 |
| BCL 300*i* R1 M 102 D | with M optics and display | 50116197 |
| BCL 300*i* R1 F 102 D | with F optics and display | 50116193 |
| **Single line scanner with deflection mirror** | | |
| BCL 300*i* S N 100 | with N optics | 50116223 |
| BCL 300*i* S M 100 | with M optics | 50116217 |
| BCL 300*i* S F 100 | with F optics | 50116205 |
| BCL 300*i* S L 100 | with L optics | 50116211 |
| BCL 300*i* S N 100 D | with N optics and display | 50116222 |
| BCL 300*i* S M 100 D | with M optics and display | 50116216 |
| BCL 300*i* S F 100 D | with F optics and display | 50116204 |
| BCL 300*i* S L 100 D | with L optics and display | 50116210 |
| BCL 300*i* S N 100 D H | with N optics, display and heating | 50116221 |
| BCL 300*i* S M 100 D H | with M optics, display and heating | 50116215 |
| BCL 300*i* S F 100 D H | with F optics, display and heating | 50116203 |
| BCL 300*i* S L 100 D H | with L optics, display and heating | 50116209 |
| **Raster scanner with deflection mirror** | | |
| BCL 300*i* R1 N 100 | with N optics | 50116200 |
| BCL 300*i* R1 M 100 | with M optics | 50116196 |
| BCL 300*i* R1 F 100 | with F optics | 50116192 |
| BCL 300*i* R1 N 100 D | with N optics and display | 50116199 |
| BCL 300*i* R1 M 100 D | with M optics and display | 50116195 |
| BCL 300*i* R1 F 100 D | with F optics and display | 50116191 |
| **Oscillating mirror scanner** | | |
| BCL 300*i* O N 100 | with N optics | 50116188 |
| BCL 300*i* O M 100 | with M optics | 50116185 |
| BCL 300*i* O F 100 | with F optics | 50116179 |
| BCL 300*i* O L 100 | with L optics | 50116182 |
| BCL 300*i* O N 100 D | with N optics and display | 50116189 |
| BCL 300*i* O M 100 D | with M optics and display | 50116186 |
| BCL 300*i* O F 100 D | with F optics and display | 50116180 |
| BCL 300*i* O L 100 D | with L optics and display | 50116183 |
| BCL 300*i* O N 100 D H | with N optics, display and heating | 50116190 |
| BCL 300*i* O M 100 D H | with M optics, display and heating | 50116187 |
| BCL 300*i* O F 100 D H | with F optics, display and heating | 50116181 |
| BCL 300*i* O L 100 D H | with L optics, display and heating | 50116184 |

Table 13.2: Type overview BCL 300*i*

## 13.3 BCL 301*i*

multiNet plus slave with 1x RS 485 interface at 2x M12 B-coded connectors:

| Type designation | Description | Part no. |
|---|---|---|
| **Single line scanner with frontal beam exit** | | |
| BCL 301*i* S N 102 | with N optics | 50116319 |
| BCL 301*i* S M 102 | with M optics | 50116313 |
| BCL 301*i* S F 102 | with F optics | 50116301 |
| BCL 301*i* S L 102 | with L optics | 50116307 |
| BCL 301*i* S N 102 D | with N optics and display | 50116318 |
| BCL 301*i* S M 102 D | with M optics and display | 50116312 |
| BCL 301*i* S F 102 D | with F optics and display | 50116300 |
| BCL 301*i* S L 102 D | with L optics and display | 50116306 |
| BCL 301*i* S N 102 D H | with N optics, display and heating | 50116317 |
| BCL 301*i* S M 102 D H | with M optics, display and heating | 50116311 |
| BCL 301*i* S F 102 D H | with F optics, display and heating | 50116299 |
| BCL 301*i* S L 102 D H | with L optics, display and heating | 50116305 |
| **Raster scanner with frontal beam exit** | | |
| BCL 301*i* R1 N 102 | with N optics | 50116295 |
| BCL 301*i* R1 M 102 | with M optics | 50116291 |
| BCL 301*i* R1 F 102 | with F optics | 50116287 |
| BCL 301*i* R1 N 102 D | with N optics and display | 50116294 |
| BCL 301*i* R1 M 102 D | with M optics and display | 50116290 |
| BCL 301*i* R1 F 102 D | with F optics and display | 50116286 |
| **Single line scanner with deflection mirror** | | |
| BCL 301*i* S N 100 | with N optics | 50116316 |
| BCL 301*i* S M 100 | with M optics | 50116308 |
| BCL 301*i* S F 100 | with F optics | 50116298 |
| BCL 301*i* S L 100 | with L optics | 50116304 |
| BCL 301*i* S N 100 D | with N optics and display | 50116315 |
| BCL 301*i* S M 100 D | with M optics and display | 50116310 |
| BCL 301*i* S F 100 D | with F optics and display | 50116297 |
| BCL 301*i* S L 100 D | with L optics and display | 50116303 |
| BCL 301*i* S N 100 D H | with N optics, display and heating | 50116314 |
| BCL 301*i* S M 100 D H | with M optics, display and heating | 50116309 |
| BCL 301*i* S F 100 D H | with F optics, display and heating | 50116296 |
| BCL 301*i* S L 100 D H | with L optics, display and heating | 50116302 |
| **Raster scanner with deflection mirror** | | |
| BCL 301*i* R1 N 100 | with N optics | 50116293 |
| BCL 301*i* R1 M 100 | with M optics | 50116289 |
| BCL 301*i* R1 F 100 | with F optics | 50116285 |
| BCL 301*i* R1 N 100 D | with N optics and display | 50116292 |
| BCL 301*i* R1 M 100 D | with M optics and display | 50116288 |
| BCL 301*i* R1 F 100 D | with F optics and display | 50116284 |
| **Oscillating mirror scanner** | | |
| BCL 301*i* O N 100 | with N optics | 50116281 |
| BCL 301*i* O M 100 | with M optics | 50116278 |
| BCL 301*i* O F 100 | with F optics | 50116272 |
| BCL 301*i* O L 100 | with L optics | 50116275 |
| BCL 301*i* O N 100 D | with N optics and display | 50116282 |
| BCL 301*i* O M 100 D | with M optics and display | 50116279 |
| BCL 301*i* O F 100 D | with F optics and display | 50116273 |
| BCL 301*i* O L 100 D | with L optics and display | 50116276 |
| BCL 301*i* O N 100 D H | with N optics, display and heating | 50116283 |
| BCL 301*i* O M 100 D H | with M optics, display and heating | 50116280 |
| BCL 301*i* O F 100 D H | with F optics, display and heating | 50116274 |
| BCL 301*i* O L 100 D H | with L optics, display and heating | 50116277 |

Table 13.3: Type overview BCL 301*i*

## 13.4 Connection hood / terminal box accessories

| Type designation | Description | Part no. |
|---|---|---|
| MS 300 | Hood with integrated connectors for BCL 300*i* | 50116468 |
| MS 301 | Hood with integrated connectors for BCL 301*i* | 50116469 |
| MK 300 | Terminal hood for BCL 300*i* | 50116463 |
| MK 301 | Terminal hood for BCL 301*i* | 50116464 |
| KB 301-3000 | Cable hood for BCL 300*i* \ BCL 301*i*, cable length 3m | 50114571 |
| MA 100 | External terminal box for BCL 300*i* \ BCL 301*i* | 50114369 |

Table 13.4: Connection hoods / terminal boxes for the BCL 300*i* \ BCL 301*i*

## 13.5 Accessory terminating resistor

| Type designation | Description | Part no. |
|---|---|---|
| TS 02-4-SO M12 | M12 connector with integrated terminating resistor for BUS OUT | 50038539 |

Table 13.5: Terminating resistor for the BCL 301*i*

## 13.6 Accessory connectors

| Type designation | Description | Part no. |
|---|---|---|
| KD 02-5-BA | M12 axial socket for HOST or BUS IN, shielded | 50038538 |
| KD 02-5-SA | M12 axial connector for BUS OUT, shielded | 50038537 |
| KD 095-5A | M12 axial socket for voltage supply, shielded | 50020501 |

Table 13.6: Connectors for the BCL 300*i* \ BCL 301*i*

## 13.7 Accessory USB cable

| Type designation | Description | Part no. |
|---|---|---|
| KB USBA-USBminiB | USB service cable, 2 type A and Mini-B type connectors, length 1m | 50117011 |

Table 13.7: Service cable for the BCL 300*i* \ BCL 301*i*

## 13.8 Accessory mounting device

| Type designation | Description | Part no. |
|---|---|---|
| BT 56 | Mounting device for rod | 50027375 |
| BT 59 | Mounting device for ITEM | 50111224 |

Table 13.8: Mounting devices for the BCL 300*i* \ BCL 301*i*

## 13.9 Reflector accessories for autoReflAct

| Type designation | Description | Part no. |
|---|---|---|
| Reflective tape no. 4 / 100 x 100 mm | Reflective tape as reflector for autoReflAct operation | 50106119 |

Table 13.9: Reflector for autoReflAct operation

## 13.10 Accessory ready-made cables for voltage supply

### 13.10.1 Contact assignment of PWR connection cable

| PWR connection cable (5-pin socket, A-coded, not shielded) | | | |
|---|---|---|---|
| 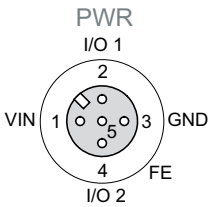  **M12 socket (A-coded)** | **Pin** | **Name** | **Core color** |
| | 1 | VIN | **brown** |
| | 2 | I/O 1 | **white** |
| | 3 | GND | **blue** |
| | 4 | I/O 2 | **black** |
| | 5 | FE | **gray** |
| | Thread | FE | **bare** |

***Notice!***

*These cables are not shielded.*

### 13.10.2 Specifications of the cables for voltage supply

| | | |
|---|---|---|
| **Operating temperature range** | in rest state: | -30°C … +70°C |
| | in motion: | 5°C … +70°C |
| **Material** | sheathing: PVC | |
| **Bending radius** | > 50mm | |

### 13.10.3 Order codes of the cables for voltage supply

| Type designation | Description | Part no. |
|---|---|---|
| K-D M12A-5P-5m-PVC | M12 socket for PWR, axial connector, open cable end, cable length 5m, not shielded | 50104557 |
| K-D M12A-5P-10m-PVC | M12 socket for PWR, axial plug outlet, open cable end, cable length 10m, not shielded | 50104559 |

Table 13.10: PWR cables for the BCL 300*i* \ BCL 301*i*

## 13.11 Accessory ready-made cables for bus connection

### 13.11.1 General information

- Cables **KB PB…** for connecting to the BUS IN/BUS OUT M12 connector for RS 485 Leuze multiNet
- **KB SSI/IBS…** cables for connecting to the BUS IN/Host M12 connector for the RS 232
- Standard cable available in lengths from 2 … 30 m
- Special cables on request.

### 13.11.2 Contact assignment RS 485, connection cable KB PB… for multiNet plus

**multiNet plus connection cable (5-pin socket/connector, B-coded)**

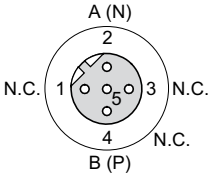


**M12 socket (B-coded)**

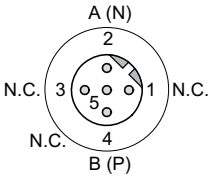


**M12 connector (B-coded)**

| Pin | Name | Core color |
|---|---|---|
| 1 | N.C. | – |
| 2 | A (N) | **green** |
| 3 | N.C. | – |
| 4 | B (P) | **red** |
| 5 | N.C. | – |
| Thread | FE | **bare** |

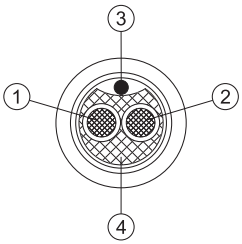


Shielding contact via connector housing!

**1** Conductor with insulation **red**
**2** Conductor with insulation **green**
**3** Drain wire
**4** Fibrous fleece

Figure 13.11: Cable configuration multiNet plus connection cables

### 13.11.3 Contact assignment RS 232, connection cable KB SSI/IBS…

| SSI/IBS connection cable (5-pin socket, B-coded) | | | |
|---|---|---|---|
| HOST / BUS IN<br>TXD/TX-<br>CTS/RX+ 1 2 3 GND_ISO<br>5<br>4 RXD/RX-<br>RTS/TX+<br>**M12 socket (B-coded)** | **Pin** | **Name** | **Core color** |
| | 1 | CTS / RX+ | **yellow** |
| | 2 | TXD / TX- | **green** |
| | 3 | GND_ISO | **gray** |
| | 4 | RTS/TX+ | **pink** |
| | 5 | RXD/RX- | **brown** |
| | Thread | FE | **bare** |

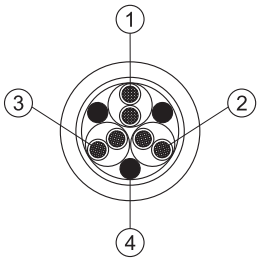


Shielding contact via connector housing!

**1** Conductor pair with **white/brown** insulation
**2** Conductor pair with **green/yellow** insulation
**3** Conductor pair with **gray/pink** insulation
**4** Filler (polyester threads)

All wire pairs stranded, colors in acc. with DIN 47100

### 13.11.4 Technical data of interface connection cables

**Operating temperature range** in rest state: -40°C … +80°C
in motion: -5°C … +80°C

**Material** the cables fulfill the PROFIBUS requirements and are free of halogens, silicone, and PVC

**Bending radius** > 80mm, suitable for drag chains

### 13.11.5 Order code interface connection cable

| Type designation | Description | Part no. |
|---|---|---|
| | | |
| **M12 socket for BUS IN, axial connector, open cable end** | | |
| KB PB-2000-BA | Cable length 2m | 50104181 |
| KB PB-5000-BA | Cable length 5m | 50104180 |
| KB PB-10000-BA | Cable length 10m | 50104179 |
| KB PB-15000-BA | Cable length 15m | 50104178 |
| KB PB-20000-BA | Cable length 20m | 50104177 |

Table 13.12: Interface connection cable for the BCL 300*i* \ BCL 301*i*

| Type designation | Description | Part no. |
|---|---|---|
| KB PB-25000-BA | Cable length 25 m | 50104176 |
| KB PB-30000-BA | Cable length 30 m | 50104175 |
| | | |
| **M12 connector for BUS OUT, axial connector, open cable end** | | |
| KB PB-2000-SA | Cable length 2 m | 50104188 |
| KB PB-5000-SA | Cable length 5 m | 50104187 |
| KB PB-10000-SA | Cable length 10 m | 50104186 |
| KB PB-15000-SA | Cable length 15 m | 50104185 |
| KB PB-20000-SA | Cable length 20 m | 50104184 |
| KB PB-25000-SA | Cable length 25 m | 50104183 |
| KB PB-30000-SA | Cable length 30 m | 50104182 |
| | | |
| **M12 connector + M12 socket, axial connectors** | | |
| KB PB-1000-SBA | Cable length 1 m | 50104096 |
| KB PB-2000-SBA | Cable length 2 m | 50104097 |
| KB PB-5000-SBA | Cable length 5 m | 50104098 |
| KB PB-10000-SBA | Cable length 10 m | 50104099 |
| KB PB-15000-SBA | Cable length 15 m | 50104100 |
| KB PB-20000-SBA | Cable length 20 m | 50104101 |
| KB PB-25000-SBA | Cable length 25 m | 50104174 |
| KB PB-30000-SBA | Cable length 30 m | 50104173 |
| | | |
| **M12 socket for BUS IN, axial connector, open line end** | | |
| KB SSI/IBS-2000-BA | Cable length 2 m | 50104172 |
| KB SSI/IBS-5000-BA | Cable length 5 m | 50104171 |
| KB SSI/IBS-10000-BA | Cable length 10 m | 50104170 |
| KB SSI/IBS-15000-BA | Cable length 15 m | 50104169 |
| KB SSI/IBS-20000-BA | Cable length 20 m | 50104168 |
| KB SSI/IBS-25000-BA | Cable length 25 m | 50108447 |
| KB SSI/IBS-30000-BA | Cable length 30 m | 50108446 |

Table 13.12: Interface connection cable for the BCL 300*i* \ BCL 301*i*

# 14 Maintenance

## 14.1 General maintenance information

Usually, the bar code reader BCL 300*i* \ BCL 301*i* does not require any maintenance by the operator.

### *Cleaning*

Clean glass surface with a damp sponge soaked in commercial cleaning detergent. Then rub it with a soft, clean, dry cloth.

***Notice!***

*Do not use aggressive cleaning agents such as thinner or acetone for cleaning the device. Use of improper cleaning agents can damage the housing window.*

## 14.2 Repairs, servicing

Repairs to the device must only be carried out by the manufacturer.

*Contact your Leuze distributor or service organization should repairs be required. The addresses can be found on the inside of the cover and on the back.*

***Notice!***

*When sending devices to Leuze electronic for repair, please provide an accurate description of the error.*

## 14.3 Disassembling, packing, disposing

### *Repacking*

For later reuse, the device is to be packed so that it is protected.

***Notice!***

*Electrical scrap is a special waste product! Observe the locally applicable regulations regarding disposal of the product.*

# 15 Appendix

## 15.1 Declaration of Conformity

Leuze electronic

the sensor people

| EG-KONFORMITÄTS-ERKLÄRUNG | EC DECLARATION OF CONFORMITY | DECLARATION CE DE CONFORMITE |
|---|---|---|
| Der Hersteller | The Manufacturer | Le constructeur |
| | **Leuze electronic GmbH + Co. KG<br>In der Braike 1, PO Box 1111<br>73277 Owen, Germany** | |
| erklärt, dass die nachfolgend aufgeführten Produkte den einschlägigen Anforderungen der genannten EG-Richtlinien entsprechen. | declares that the following listed products fulfil the relevant provisions of the mentioned EC Directives. | déclare que les produits identifiés suivants sont conformes aux directives CE mentionnées. |
| Produktbeschreibung: | Description of product: | Description de produit: |
| **Stationärer Barcodeleser BCL 3xxi** | **Stationary Barcode Reader BCL 3xxi** | **Lecteures Stationn. de Code à Barres BCL 3xxi** |
| Angewandte EG-Richtlinie(n): | Applied EC Directive(s): | Directive(s) CE appliquées: |
| **2004/108/EG<br>2006/95/EG** | **2004/108/EC<br>2006/95/EC** | **2004/108/CE<br>2006/95/CE** |
| Angewandte Normen: | Applied standards: | Normes appliquées: |
| **EN 61000-6-2: 2005<br>EN 60825-1: 2007** | | **EN 61000-6-3: 2007** |

24.8.2011

Datum / Date / Date — Dr. Harald Grübel, Geschäftsführer / Director / Directeur

**Leuze electronic GmbH + Co. KG**
In der Braike 1
D-73277 Owen
Telefon +49 (0) 7021 573-0
Telefax +49 (0) 7021 573-199
info@leuze.de
www.leuze.com

LEO-ZQM-148-01-FO

Leuze electronic GmbH + Co. KG, Sitz Owen, Registergericht Stuttgart, HRA 230712
**Persönlich haftende Gesellschafterin** Leuze electronic Geschäftsführungs-GmbH,
Sitz Owen, Registergericht Stuttgart, HRB 230550
**Geschäftsführer:** Dr. Harald Grübel (Vorsitzender), Karsten Just
USt.-IdNr. DE 145812521 | Zollnummer 2554232

Es gelten ausschließlich unsere aktuellen Verkaufs- und Lieferbedingungen
Only our current Terms and Conditions of Sale and Delivery shall apply

Figure 15.1: Declaration of conformity BCL 300*i* \ BCL 301*i*

Leuze electronic

the sensor people

| EG-KONFORMITÄTS-ERKLÄRUNG | EC DECLARATION OF CONFORMITY | DECLARATION CE DE CONFORMITE |
|---|---|---|
| Der Hersteller | The Manufacturer | Le constructeur |
| | **Leuze electronic GmbH + Co. KG**<br>**In der Braike 1, PO Box 1111**<br>**73277 Owen, Germany** | |
| erklärt, dass die nachfolgend aufgeführten Produkte den einschlägigen Anforderungen der genannten EG-Richtlinien entsprechen. | declares that the following listed products fulfil the relevant provisions of the mentioned EC Directives. | déclare que les produits identifiés suivants sont conformes aux directives CE mentionnées. |
| Produktbeschreibung: | Description of product: | Description de produit: |
| **Modulare Steckerhaube MS 3xx,**<br>**Modulare Klemmhaube MK 3xx,**<br>**Modulare Anschlusseinheit MA 100** | **Modular hood with integrated connectors MS 3xx,**<br>**Modular terminal hoods MK 3xx,**<br>**Modular interfacing unit MA 100** | **Logement modulaire de prises MS 3xx,**<br>**Logement modulaire de bornes MK 3xx,**<br>**Unité modulaire de branchement MA 100** |
| Angewandte EG-Richtlinie(n): | Applied EC Directive(s): | Directive(s) CE appliquées: |
| **2004/108/EG** | **2004/108/EC** | **2004/108/CE** |
| Angewandte Normen: | Applied standards: | Normes appliquées: |
| **EN 61000-6-2: 2005** | | **EN 61000-6-4: 2007** |

9.3.2011 Datum / Date

Dr. Harald Grübel, Geschäftsführer / Director / Directeur

**Leuze electronic GmbH + Co. KG**
In der Braike 1
D-73277 Owen
Telefon +49 (0) 7021 573-0
Telefax +49 (0) 7021 573-199
info@leuze.de
www.leuze.com

LEO-ZQM-148-01-FO

Leuze electronic GmbH + Co. KG, Sitz Owen, Registergericht Stuttgart, HRA 230712
**Persönlich haftende Gesellschafterin** Leuze electronic Geschäftsführungs-GmbH, Sitz Owen, Registergericht Stuttgart, HRB 230550
**Geschäftsführer:** Dr. Harald Grübel (Vorsitzender), Karsten Just
USt.-IdNr. DE 145912521 | Zollnummer 2554232
Es gelten ausschließlich unsere aktuellen Verkaufs- und Lieferbedingungen
Only our current Terms and Conditions of Sale and Delivery shall apply

Figure 15.2: Connection hood / connector unit declaration of conformity

## 15.2 ASCII character set

| ASCII | Dec. | Hex. | Oct. | Designation | Meaning |
|---|---|---|---|---|---|
| NUL | 0 | 00 | 0 | NULL | Zero |
| SOH | 1 | 01 | 1 | START OF HEADING | Start of heading |
| STX | 2 | 02 | 2 | START OF TEXT | Start of text characters |
| ETX | 3 | 03 | 3 | END OF TEXT | Last character of text |
| EOT | 4 | 04 | 4 | END OF TRANSMISS. | End of transmission |
| ENQ | 5 | 05 | 5 | ENQUIRY | Request for data trans. |
| ACK | 6 | 06 | 6 | ACKNOWLEDGE | Positive acknowledgment |
| BEL | 7 | 07 | 7 | BELL | Bell signal |
| BS | 8 | 08 | 10 | BACKSPACE | Backspace |
| HT | 9 | 09 | 11 | HORIZ. TABULATOR | Horizontal tabulator |
| LF | 10 | 0A | 12 | LINE FEED | Line feed |
| VT | 11 | 0B | 13 | VERT. TABULATOR | Vertical tabulator |
| FF | 12 | 0C | 14 | FORM FEED | Form feed |
| CR | 13 | 0D | 15 | CARRIAGE RETURN | Carriage return |
| SO | 14 | 0E | 16 | SHIFT OUT | Shift out |
| SI | 15 | 0F | 17 | SHIFT IN | Shift in |
| DLE | 16 | 10 | 20 | DATA LINK ESCAPE | Data link escape |
| DC1 | 17 | 11 | 21 | DEVICE CONTROL 1 | Device control character 1 |
| DC2 | 18 | 12 | 22 | DEVICE CONTROL 2 | Device control character 2 |
| DC3 | 19 | 13 | 23 | DEVICE CONTROL 3 | Device control character 3 |
| DC4 | 20 | 14 | 24 | DEVICE CONTROL 4 | Device control character 4 |
| NAK | 21 | 15 | 25 | NEG. ACKNOWLEDGE | Negative acknowledge |
| SYN | 22 | 16 | 26 | SYNCRONOUS IDLE | Synchronization |
| ETB | 23 | 17 | 27 | EOF TRANSM. BLOCK | End of data transmission block |
| CAN | 24 | 18 | 30 | CANCEL | Invalid |
| EM | 25 | 19 | 31 | END OF MEDIUM | End of medium |
| SUB | 26 | 1A | 32 | SUBSTITUTE | Substitution |
| ESC | 27 | 1B | 33 | ESCAPE | Escape |
| FS | 28 | 1C | 34 | FILE SEPARATOR | File separator |
| GS | 29 | 1D | 35 | GROUP SEPARATOR | Group separator |
| RS | 30 | 1E | 36 | RECORD SEPARATOR | Record separator |
| US | 31 | 1F | 37 | UNIT SEPARATOR | Unit separator |
| SP | 32 | 20 | 40 | SPACE | Space |
| ! | 33 | 21 | 41 | EXCLAMATION POINT | Exclamation point |

| ASCII | Dec. | Hex. | Oct. | Designation | Meaning |
|---|---|---|---|---|---|
| " | 34 | 22 | 42 | QUOTATION MARK | Quotation mark |
| # | 35 | 23 | 43 | NUMBER SIGN | Number sign |
| $ | 36 | 24 | 44 | DOLLAR SIGN | Dollar sign |
| % | 37 | 25 | 45 | PERCENT SIGN | Percent sign |
| & | 38 | 26 | 46 | AMPERSAND | Ampersand |
| ’ | 39 | 27 | 47 | APOSTROPHE | Apostrophe |
| ( | 40 | 28 | 50 | OPEN. PARENTHESIS | Open parenthesis |
| ) | 41 | 29 | 51 | CLOS. PARENTHESIS | Closed parenthesis |
| * | 42 | 2A | 52 | ASTERISK | Asterisk |
| + | 43 | 2B | 53 | PLUS | Plus sign |
| , | 44 | 2C | 54 | COMMA | Comma |
| - | 45 | 2D | 55 | HYPHEN (MINUS) | Hyphen |
| . | 46 | 2E | 56 | PERIOD (DECIMAL) | Period (decimal) |
| / | 47 | 2F | 57 | SLANT | Slant |
| 0 | 48 | 30 | 60 | 0 | Number |
| 1 | 49 | 31 | 61 | 1 | Number |
| 2 | 50 | 32 | 62 | 2 | Number |
| 3 | 51 | 33 | 63 | 3 | Number |
| 4 | 52 | 34 | 64 | 4 | Number |
| 5 | 53 | 35 | 65 | 5 | Number |
| 6 | 54 | 36 | 66 | 6 | Number |
| 7 | 55 | 37 | 67 | 7 | Number |
| 8 | 56 | 38 | 70 | 8 | Number |
| 9 | 57 | 39 | 71 | 9 | Number |
| : | 58 | 3A | 72 | COLON | Colon |
| ; | 59 | 3B | 73 | SEMICOLON | Semicolon |
| < | 60 | 3C | 74 | LESS THAN | Less than |
| = | 61 | 3D | 75 | EQUALS | Equals |
| > | 62 | 3E | 76 | GREATER THAN | Greater than |
| ? | 63 | 3F | 77 | QUESTION MARK | Question mark |
| @ | 64 | 40 | 100 | COMMERCIAL AT | Commercial AT |
| A | 65 | 41 | 101 | A | Capital letter |
| B | 66 | 42 | 102 | B | Capital letter |
| C | 67 | 43 | 103 | C | Capital letter |
| D | 68 | 44 | 104 | D | Capital letter |

| ASCII | Dec. | Hex. | Oct. | Designation | Meaning |
|---|---|---|---|---|---|
| E | 69 | 45 | 105 | E | Capital letter |
| F | 70 | 46 | 106 | F | Capital letter |
| G | 71 | 47 | 107 | G | Capital letter |
| H | 72 | 48 | 110 | H | Capital letter |
| I | 73 | 49 | 111 | I | Capital letter |
| J | 74 | 4A | 112 | J | Capital letter |
| K | 75 | 4B | 113 | K | Capital letter |
| L | 76 | 4C | 114 | L | Capital letter |
| M | 77 | 4D | 115 | M | Capital letter |
| N | 78 | 4E | 116 | N | Capital letter |
| O | 79 | 4F | 117 | O | Capital letter |
| P | 80 | 50 | 120 | P | Capital letter |
| Q | 81 | 51 | 121 | Q | Capital letter |
| R | 82 | 52 | 122 | R | Capital letter |
| S | 83 | 53 | 123 | S | Capital letter |
| T | 84 | 54 | 124 | T | Capital letter |
| U | 85 | 55 | 125 | U | Capital letter |
| V | 86 | 56 | 126 | V | Capital letter |
| W | 87 | 57 | 127 | W | Capital letter |
| X | 88 | 58 | 130 | X | Capital letter |
| Y | 89 | 59 | 131 | Y | Capital letter |
| Z | 90 | 5A | 132 | Z | Capital letter |
| [ | 91 | 5B | 133 | OPENING BRACKET | Opening bracket |
| \ | 92 | 5C | 134 | REVERSE SLANT | Reverse slant |
| ] | 93 | 5D | 135 | CLOSING BRACKET | Closing bracket |
| ^ | 94 | 5E | 136 | CIRCUMFLEX | Circumflex |
| _ | 95 | 5F | 137 | UNDERSCORE | Underscore |
| ‘ | 96 | 60 | 140 | GRAVE ACCENT | Grave accent |
| a | 97 | 61 | 141 | a | Lower case letter |
| b | 98 | 62 | 142 | b | Lower case letter |
| c | 99 | 63 | 143 | c | Lower case letter |
| d | 100 | 64 | 144 | d | Lower case letter |
| e | 101 | 65 | 145 | e | Lower case letter |
| f | 102 | 66 | 146 | f | Lower case letter |
| g | 103 | 67 | 147 | g | Lower case letter |

| ASCII | Dec. | Hex. | Oct. | Designation | Meaning |
|---|---|---|---|---|---|
| h | 104 | 68 | 150 | h | Lower case letter |
| i | 105 | 69 | 151 | i | Lower case letter |
| j | 106 | 6A | 152 | j | Lower case letter |
| k | 107 | 6B | 153 | k | Lower case letter |
| l | 108 | 6C | 154 | l | Lower case letter |
| m | 109 | 6D | 155 | m | Lower case letter |
| n | 110 | 6E | 156 | n | Lower case letter |
| o | 111 | 6F | 157 | o | Lower case letter |
| p | 112 | 70 | 160 | p | Lower case letter |
| q | 113 | 71 | 161 | q | Lower case letter |
| r | 114 | 72 | 162 | r | Lower case letter |
| s | 115 | 73 | 163 | s | Lower case letter |
| t | 116 | 74 | 164 | t | Lower case letter |
| u | 117 | 75 | 165 | u | Lower case letter |
| v | 118 | 76 | 166 | v | Lower case letter |
| w | 119 | 77 | 167 | w | Lower case letter |
| x | 120 | 78 | 170 | x | Lower case letter |
| y | 121 | 79 | 171 | y | Lower case letter |
| z | 122 | 7A | 172 | z | Lower case letter |
| { | 123 | 7B | 173 | OPENING BRACE | Opening brace |
| \| | 124 | 7C | 174 | VERTICAL LINE | Vertical line |
| } | 125 | 7D | 175 | CLOSING BRACE | Closing brace |
| ~ | 126 | 7E | 176 | TILDE | Tilde |
| DEL | 127 | 7F | 177 | DELETE (RUBOUT) | Delete |

## 15.3 Bar code samples

### 15.3.1 Module 0.3

**Code type 01: Interleaved 2 of 5**

Modul 0,3

1122334455

**Code type 02: Code 39**

Modul 0,3

135AC

**Code type 11: Codabar**

Modul 0,3

A121314A

**Code 128**

Modul 0,3

abcde

**Code type 08: EAN 128**

Modul 0,3

leuze

**Code type 06: UPC-A**

SC 2

1 23456 78901 2

**Code type 07: EAN 8**

SC 3

3456 7890

**Code type 10: EAN 13 Add-on**

SC 0 S

77889

1 122334 455666

**Code type 13: GS1 DataBar OMNIDIRECTIONAL**

(01) 0 0000123 45678 4

Figure 15.3: Bar code sample labels (module 0.3)

### 15.3.2 Module 0.5

**Code type 01: Interleaved 2 of 5**

Modul 0,5

6677889900

**Code type 02: Code 39**

Modul 0,5

246BD

**Code type 11: Codabar**

Modul 0,5

A1511617A

**Code 128**

Modul 0,5

fghij

**Code type 08: EAN 128**

Modul 0,5

LEUZE

**Code type 06: UPC-A**

SC 4

0 98765 43219 8

**Code type 07: EAN 8**

SC 6

9876 5430

**Code type 10: EAN 13 Add-on**

SC 2

0 099887 766550 44332

Figure 15.4: Bar code sample labels (module 0.5)