Leuze electronic

the sensor people

BCL558i
Bar code reader

en 01-2013/06 50123233
We reserve the right to
make technical changes

TECHNICAL DESCRIPTION

ПРОМЭЛЕКТРОНИКА / sales@prom-elec.com

© 2013
Leuze electronic GmbH + Co. KG
In der Braike 1
D-73277 Owen - Teck / Germany
Phone: +49 7021 573-0
Fax: +49 7021 573-199
http://www.leuze.com
info@leuze.de

The main menus

```
BCL558i SF 102
Leuze electronic
     GmbH & Co. KG
SW: V 1.4  HW:1
SN: 0704-081894 001
```

Device information - main menu

Information about
- Device type
- Software version
- Hardware version
- Serial number

```
Network settings
Channel 1:
Addr:     192.168.60.101
Mask:     255.255.255.0
Gateway:  0.0.0.0
```

Network settings - main menu

- Display of the network settings

See "EtherNet/IP" on page 99.

```
IO1 IO2  IO3        ENIP
IO4 ATT ERR
                12345678
```

Bar code reading window - main menu

Visualization of the read bar code information.
See "Indicators in the display" on page 86.

```
Parameter
  Parameter handling
  Decoder table
  Digital SWIO
  EtherNet/IP
```

Parameter - main menu

Configuration of the bar code reader.
See "Parameter menu" on page 92.

```
Language selection
o Deutsch
o English
o Español
o Français
o Italiano
```

Language selection - main menu

Selection of the display language.
See "Language selection menu" on page 100.

```
Service

  Diagnostics
  Status messages
```

Service - main menu

Scanner diagnosis and status messages.
See "Service menu" on page 100.

```
Actions
o Start decoding
o Start alignment
o Start auto-setup
o Start teach-in
```

Actions - main menu

Various functions for scanner configuration and manual operation.
See "Actions menu" on page 101.

Device buttons:

- Navigate **upward/laterally**
- Navigate **downward/laterally**
- **ESCAPE** leave
- **ENTER** confirm

Input of values

```
12|
 <-0123456789     save
 Standard -------- Unit
   126  |    |
```

- ← + ↵ Delete character
- 0...9 + ↵ Enter digit
- save + ↵ Save input

PWR

PWR LED

Off	Device OFF
Flashes green	Device ok, initialization phase
Green, continuous light	Device OK
Orange, continuous light	Service mode
Flashes red	Device ok, warning set
Red, continuous light	Device error

NET

NET LED

Off	No supply voltage/IP address
Flashes green	No Ethernet/IP communication
Green, continuous light	Bus communication ok
Flashes red	Timeout
Flashes red/green	self test
Red, continuous light	double IP address

1 General information 9
1.1 Explanation of symbols 9
1.2 Declaration of conformity 9

2 Safety notices 10
2.1 General safety notices 10
2.2 Safety standards 10
2.3 Approved purpose 10
2.4 Working safely 11

3 Fast commissioning / operating principle 13
3.1 Mounting the BCL 558*i* 13
3.2 Device arrangement and selection of the mounting location 13
3.3 Electrical connection BCL 558*i* 14
3.4 Starting the device 15
3.5 Further settings 18
3.6 Bar code reading 19

4 Device description 20
4.1 About the bar code readers of the BCL 500*i* series 20
4.2 Characteristics of the bar code readers of the BCL 500*i* series 21
4.3 Device construction 23
4.4 Reading techniques 24
4.4.1 Line scanner (single line) 24
4.4.2 Line scanner with oscillating mirror 25
4.4.3 Omnidirectional reading 26
4.5 Fieldbus systems 27
4.5.1 EtherNet/IP 27
4.5.2 Ethernet – star topology 28
4.5.3 Ethernet – linear topology 29
4.6 Heater 30
4.7 External parameter memory 30
4.8 autoReflAct 31
4.9 Reference codes 32
4.10 autoConfig 32

5 Specifications 33
5.1 General specifications of the bar code readers 33

5.1.1 Line scanner 33
5.1.2 Oscillating-mirror scanner 35
5.1.3 Line scanner with deflection mirror 35

5.2 Heating models of the bar code readers 36
5.2.1 Line scanner with heating 37
5.2.2 Oscillating-mirror scanner with heating 38
5.2.3 Line scanner with deflection mirror and heating 39

5.3 Dimensioned drawings 40
5.3.1 Line scanner with / without heating 40
5.3.2 Deflection mirror scanner with / without heating 41
5.3.3 Oscillating-mirror scanner with / without heating 42

5.4 Type overview BCL 558*i* 43

5.5 Reading field curves / optical data 44

5.6 Reading field curves 45
5.6.1 High Density (N) Optics: BCL 558*i* SN 100/102 46
5.6.2 High Density (N) Optics: BCL 558*i* ON 100 47
5.6.3 Medium Density (M) Optics: BCL 558*i* SM 100/102 48
5.6.4 Medium Density (M) Optics: BCL 558*i* OM 100. 49
5.6.5 Low Density (F) Optics: BCL 558*i* SF 100/102 50
5.6.6 Low Density (F) Optics: BCL 558*i* OF 100 51
5.6.7 Ultra Low Density (L) Optics: BCL 558*i* SL 102 52
5.6.8 Ultra Low Density (L) Optics: BCL 558*i* OL 100 53

5.7 Reading field curves for heating devices 54
5.7.1 High Density (N) Optics: BCL 558*i* SN 102 H 54
5.7.2 High Density (N) Optics: BCL 558*i* SN 100 H 55
5.7.3 High Density (N) Optics: BCL 558*i* ON 100 H 56
5.7.4 Medium Density (M) Optics: BCL 558*i* SM 102 H 57
5.7.5 Medium Density (M) Optics: BCL 558*i* SM 100 H 58
5.7.6 Medium Density (M) Optics: BCL 558*i* OM 100 H 59
5.7.7 Low Density (F) Optics: BCL 558*i* SF 102 H 60
5.7.8 Low Density (F) Optics: BCL 558*i* SF 100 H 61
5.7.9 Low Density (F) Optics: BCL 558*i* OF 100 H 62
5.7.10 Ultra Low Density (L) Optics: BCL 558*i* SL 102 H 63
5.7.11 Ultra Low Density (L) Optics: BCL 558*i* OL 100 H 64

6 Installation and mounting 65

6.1 Storage, transportation 65

6.2 Mounting the BCL 558*i* 66
6.2.1 Fastening with M4 x 6 screws 66
6.2.2 BT 56 mounting device 67
6.2.3 BT 59 mounting device 69

6.3 Device arrangement . . . 70
6.3.1 Selecting a mounting location . . . 70
6.3.2 Avoiding total reflection – Line scanner . . . 71
6.3.3 Avoiding total reflection – oscillating/deflection-mirror scanner . . . 71
6.3.4 Mounting location . . . 72
6.3.5 Devices with integrated heating . . . 72
6.3.6 Possible read angles between BCL 558*i* and bar code . . . 73
6.4 Attaching laser warning sign . . . 73
6.5 Cleaning . . . 73

7 Electrical connection . . . 74
7.1 Safety notices for the electrical connection . . . 75
7.2 Electrical connection of the BCL 558*i* . . . 76
7.2.1 PWR – Voltage supply and switching input/outputs 3 and 4 . . . 77
7.2.2 SERVICE – USB interface (type A) . . . 79
7.2.3 SW IN/OUT – Switching input/switching output . . . 80
7.2.4 HOST / BUS IN for BCL 558*i* . . . 82
7.2.5 BUS OUT for the BCL 558*i* . . . 83
7.3 Ethernet topologies . . . 84
7.3.1 Ethernet wiring . . . 85
7.4 Cable lengths and shielding . . . 85

8 Display and control panel . . . 86
8.1 Structure of the control panel . . . 86
8.2 Status display and operation . . . 86
8.2.1 Indicators in the display . . . 86
8.2.2 LED status indicators . . . 87
8.2.3 Control buttons . . . 88
8.3 Menu description . . . 90
8.3.1 The main menus . . . 90
8.3.2 Parameter menu . . . 92
8.3.3 Language selection menu . . . 100
8.3.4 Service menu . . . 100
8.3.5 Actions menu . . . 101
8.4 Operation . . . 103

9 Leuze webConfig tool . . . 104
9.1 Connecting the SERVICE USB interface . . . 104
9.2 Installing the required software . . . 105
9.2.1 System requirements . . . 105
9.2.2 Installing the USB driver . . . 105

9.3 Starting the webConfig tool 107
9.4 Short description of the webConfig tool 108
9.4.1 Module overview in the Configuration menu 108

10 Commissioning and configuration 110
10.1 Measures to be performed prior to the initial commissioning 111
10.2 Starting the device 112
10.3 Setting the communication parameters 112
10.3.1 Manually setting the IP address 113
10.4 Configuration steps for a Rockwell control without EDS support 115
10.4.1 Integrating the hardware into the PLC using the generic Ethernet module. 115
10.5 Configuration steps for a Rockwell control with EDS support 116
10.5.1 Integrating the hardware into the PLC and installing the EDS file. 116
10.6 EDS file - general info 117
10.7 Detailed EDS description 117
10.7.1 Class 1 - Identity object. 117
10.7.2 Class 4 - Assembly 119
10.7.2.1 Input assembly 119
10.7.2.2 Output assembly 122
10.7.2.3 Configuration assembly 125
10.7.3 Class 103 - I/O status and control. 126
10.7.4 Class 106 - Activation 128
10.7.5 Class 1**07 - Result data 130**
10.7.6 Class 108 - Entry data 132
10.7.7 Class 109 - Device status and device control 135
10.8 Configuration example 136
10.8.1 Example 1 - activation & result 137
10.8.2 Example 2 - activation & result & I/Os 140
10.8.3 Example 3 - activation & fragmented result. 143
10.8.4 Example 4 - entry data & result 146
10.9 Additional settings for the BCL 558*i* 149
10.9.1 Decoding and processing the read data 149
10.9.2 Control of the decoding. 150
10.9.3 Control of the switching outputs 151
10.10 Transmitting configuration data. 152
10.10.1 Via the webConfig tool. 152
10.10.2 With the external parameter memory 152

11 Online commands 155
11.1 Overview of commands and parameters. 155
11.1.1 General 'online' commands. 156

11.1.2 'Online' commands for system control . . . 163
11.1.3 'Online' commands for configuration of switching inputs/outputs . . . 164
11.1.4 'Online' commands for the parameter set operations . . . 167

12 Diagnostics and troubleshooting . . . 173

12.1 General causes of errors . . . 173

12.2 Interface errors . . . 173

13 Type overview and accessories . . . 175

13.1 Type key . . . 175

13.2 Type overview BCL 558*i* . . . 176

13.3 Accessory connectors . . . 177

13.4 Accessory USB cable . . . 177

13.5 Accessory external parameter memory . . . 177

13.6 Accessory mounting device . . . 177

13.7 Accessory reflector for AutoReflAct . . . 178

13.8 Accessory ready-made cables for voltage supply . . . 178
13.8.1 Contact assignment of PWR connection cable . . . 178
13.8.2 Specifications of the cables for voltage supply . . . 178
13.8.3 Order codes of the cables for voltage supply . . . 178

13.9 Accessory ready-made cables for bus connection . . . 179
13.9.1 General information . . . 179
13.9.2 Contact assignments M12 Ethernet connection cables KB ET... . . . 179
13.9.3 Specifications of the M12 Ethernet connection cables KB ET... . . . 179
13.9.4 Order codes for M12 Ethernet connection cables KB ET.... . . . 180

14 Maintenance . . . 181

14.1 General maintenance information . . . 181

14.2 Repairs, servicing . . . 181

14.3 Disassembling, packing, disposing . . . 181

15 Appendix . . . 182

15.1 Declaration of conformity . . . 182

15.2 ASCII character set . . . 183

15.3 Bar code samples . . . 187
15.3.1 Module 0.3 . . . 187
15.3.2 Module 0.5 . . . 188

Figure 2.1: Attachment of the stick-on labels with warning notices at the BCL 558*i* ... 12
Figure 3.1: Connections of the BCL 558*i* ... 14
Figure 3.2: Manually setting the IP address ... 16
Figure 3.3: Generic Ethernet module ... 17
Figure 4.1: Line scanner, line scanner with deflection mirror and oscillating-mirror scanner ... 20
Figure 4.2: Possible bar code orientation ... 22
Figure 4.3: Device construction ... 23
Figure 4.4: Deflection principle for the line scanner ... 24
Figure 4.5: Deflection principle for the line scanner with oscillating mirror add-on ... 25
Figure 4.6: Principle arrangement for omnidirectional reading ... 26
Figure 4.7: Ethernet with star topology ... 28
Figure 4.8: Ethernet with linear topology ... 29
Figure 4.9: External parameter memory ... 30
Figure 4.10: Reflector arrangement for autoReflAct ... 31
Table 5.1: Specifications of the BCL 558*i* line scanners without heating ... 33
Table 5.2: Specifications of the BCL 558*i* oscillating-mirror scanners without heating ... 35
Table 5.3: Specifications of the BCL 558*i* deflection mirror scanners without heating ... 36
Table 5.4: Specifications of the BCL 558*i* line scanners with heating ... 37
Table 5.5: Specifications of the BCL 558*i* oscillating-mirror scanners with heating ... 38
Table 5.6: Specifications of the BCL 558*i* deflection mirror scanners with heating ... 39
Figure 5.1: Dimensioned drawing BCL 558*i* line scanner S…102 ... 40
Figure 5.2: Dimensioned drawing BCL 558*i* deflection-mirror scanner S…100 ... 41
Figure 5.3: Dimensioned drawing BCL 558*i* oscillating-mirror scanner O…100 ... 42
Table 5.7: Type overview BCL 558*i* ... 43
Figure 5.4: The most important characteristics of a bar code ... 44
Figure 5.5: Zero position of the reading distance ... 45
Table 5.8: Reading conditions ... 45
Figure 5.6: "High Density" reading field curve for line scanner (with/without deflection mirror) ... 46
Figure 5.7: "High Density" reading field curve for oscillating-mirror scanners ... 47
Figure 5.8: Lateral "High Density" reading field curve for oscillating-mirror scanners ... 47
Figure 5.9: "Medium Density" reading field curve for line scanner (with/without deflection mirror) ... 48
Figure 5.10: "Medium Density" reading field curve for oscillating-mirror scanners ... 49
Figure 5.11: Lateral "Medium Density" reading field curve for oscillating-mirror scanners ... 49
Figure 5.12: "Low Density" reading field curve for line scanner (with/without deflection mirror) ... 50
Figure 5.13: "Low Density" reading field curve for oscillating-mirror scanners ... 51
Figure 5.14: Lateral "Low Density" reading field curve for oscillating-mirror scanners ... 51
Figure 5.15: "Ultra Low Density" reading field curve for line scanner without deflection mirror ... 52
Figure 5.16: "Ultra Low Density" reading field curve for oscillating-mirror scanners ... 53
Figure 5.17: Lateral "Ultra Low Density" reading field curve for oscillating-mirror scanners ... 53
Figure 5.18: "High Density" reading field curve for line scanner with heating (without deflection mirror) ... 54
Figure 5.19: "High Density" reading field curve for line scanner with heating (with deflection mirror) ... 55
Figure 5.20: "High Density" reading field curve for oscillating-mirror scanners with heating ... 56
Figure 5.21: Lateral "High Density" reading field curve for oscillating-mirror scanners with heating ... 56
Figure 5.22: "Medium Density" reading field curve for line scanner with heating (without deflection mirror) ... 57
Figure 5.23: "Medium Density" reading field curve for line scanner with heating (with deflection mirror) ... 58
Figure 5.24: "Medium Density" reading field curve for oscillating-mirror scanners with heating ... 59
Figure 5.25: Lateral "Medium Density" reading field curve for oscillating-mirror scanners with heating ... 59
Figure 5.26: "Low Density" reading field curve for line scanner with heating (without deflection mirror) ... 60

Figure 5.27: "Low Density" reading field curve for line scanner with heating (with deflection mirror) 61
Figure 5.28: "Low Density" reading field curve for oscillating-mirror scanners with heating 62
Figure 5.29: Lateral "Low Density" reading field curve for oscillating-mirror scanners with heating 62
Figure 5.30: "Ultra Low Density" reading field curve for line scanner with heating (without deflection mirror) . 63
Figure 5.31: "Ultra Low Density" reading field curve for oscillating-mirror scanners with heating 64
Figure 5.32: Lateral "Ultra Low Density" reading field curve for oscillating-mirror scanners with heating .. 64
Figure 6.1: Device name plate BCL 558*i* 65
Figure 6.2: Fastening options using M4x6 threaded holes 66
Figure 6.3: BT 56 mounting device 67
Figure 6.4: Mounting example of BCL 558*i* with BT 56 68
Figure 6.5: BT 59 mounting device 69
Figure 6.6: Total reflection – line scanner 71
Figure 6.7: Total reflection – BCL 558*i* with oscillating/deflection mirror 72
Figure 6.8: Reading angle for the line scanner 73
Figure 7.1: Location of the electrical connections 74
Figure 7.2: Connections of the BCL 558*i* 76
Table 7.1: Pin assignment PWR 77
Figure 7.3: Switching input connection diagram SWIO_3 and SWIO_4 78
Figure 7.4: Switching output connection diagram SWIO_3 / SWIO_4 78
Table 7.2: Pin assignments of SERVICE – USB interface 79
Table 7.3: Pin assignment SW IN/OUT 80
Figure 7.5: Switching input connection diagram SWIO_1 and SWIO_2 80
Figure 7.6: Switching output connection diagram SWIO_1 / SWIO_2 81
Table 7.4: Pin assignment HOST / BUS IN BCL 558*i* 82
Figure 7.7: HOST / BUS IN cable assignments on RJ-45 82
Table 7.5: Pin assignment BUS OUT 83
Figure 7.8: Ethernet with star topology 84
Figure 7.9: Ethernet with linear topology 84
Table 7.6: Cable lengths and shielding 85
Figure 8.1: Structure of the control panel 86
Table 8.1: Parameter handling submenu 92
Table 8.2: Decoder table submenu 93
Table 8.3: Digital SWIO submenu 96
Table 8.4: EtherNet/IP submenu 99
Figure 9.1: Connecting the SERVICE USB interface 104
Figure 9.2: Device Manager with connected BCL 558*i* 106
Figure 9.3: The start page of the webConfig tool 107
Figure 9.4: Module overview in the webConfig tool 108
Figure 10.1: Connections of the BCL 558*i* 111
Figure 10.2: Manually setting the IP address 113
Figure 10.3: Generic Ethernet module 115
Figure 10.4: New module 116
Figure 10.5: Connection between Data acceptance/Data rejection/Error code attributes 133
Figure 10.6: Configuration of example 1 - module definition with generic module 137
Figure 10.7: Configuration of example 1 - module definition with the EDS file 137
Figure 10.8: Data exchange sequence diagram - example 1 139
Figure 10.9: Configuration of example 2 - module definition with generic module 140
Figure 10.10: Configuration of example 2 - module definition with the EDS file 140

Figure 10.11: Data exchange sequence diagram - example 2 ... 142
Figure 10.12: Configuration of example 3 - module definition with generic module ... 143
Figure 10.13: Configuration of example 3 - module definition with the EDS file ... 143
Figure 10.14: Data exchange sequence diagram - example 3 ... 145
Figure 10.15: Configuration of example 4 - module definition with generic module ... 146
Figure 10.16: Configuration of example 4 - module definition with the EDS file ... 146
Figure 10.17: Data exchange sequence diagram - example 4 ... 148
Figure 10.18: Storing configuration data in the webConfig tool ... 152
Figure 10.19: Installing the external parameter memory ... 153
Figure 10.20: BCL 558*i* with installed parameter memory ... 153
Table 12.1: General causes of errors ... 173
Table 12.2: Interface error ... 173
Table 13.1: Type key ... 175
Table 13.2: Type overview BCL 558*i* ... 176
Table 13.3: Connectors for the BCL 558*i* ... 177
Table 13.4: Cable for the BCL 558*i* ... 177
Table 13.5: External parameter memory for the BCL 558*i* ... 177
Table 13.6: Mounting devices for the BCL 558*i* ... 177
Table 13.7: Reflector for the BCL 558*i* ... 178
Table 13.8: PWR cables for the BCL 558*i* ... 178
Figure 13.1: Cable structure of Industrial Ethernet connection cable ... 179
Table 13.9: Bus connection cables for the BCL 558*i* ... 180
Figure 15.1: Bar code sample labels (module 0.3) ... 187
Figure 15.2: Bar code sample labels (module 0.5) ... 188

1 General information

1.1 Explanation of symbols

The symbols used in this technical description are explained below.

Attention!

This symbol precedes text messages which must strictly be observed. Failure to comply with this information results in injuries to personnel or damage to the equipment.

Attention Laser!

This symbol warns of possible danger caused by hazardous laser radiation.

Notice!

This symbol indicates text passages containing important information.

1.2 Declaration of conformity

The bar code readers of the BCL 500*i* series have been developed and manufactured in accordance with the applicable European standards and directives.

The BCL 500*i* series is "UL LISTED" according to American and Canadian safety standards, and fulfills the requirements of Underwriter Laboratories Inc. (UL).

Notice!

You can find the Declaration of Conformity of the devices in the appendix of the manual on page 182.

The manufacturer of the product, Leuze electronic GmbH & Co. KG in D-73277 Owen, possesses a certified quality assurance system in accordance with ISO 9001.

2 Safety notices

2.1 General safety notices

Documentation

All entries in this technical description must be heeded, in particular the present chapter "Safety notices". Keep this technical description in a safe place. It should be available at all times.

Safety regulations

Observe the locally applicable regulations and the rules of the employer's liability insurance association.

Repair

Repairs must only be carried out by the manufacturer or an authorized representative.

2.2 Safety standards

The bar code readers of the BCL 500*i* series were developed, manufactured and tested in accordance with the applicable safety standards. They correspond to the state of the art.

2.3 Approved purpose

Attention!

The protection of personnel and the device cannot be guaranteed if the device is operated in a manner not complying with its intended use.

Bar code readers of the BCL 500*i* series are conceived as stationary, high-speed scanners with integrated decoders for all current bar codes used for automatic object detection.

In particular, unauthorized uses include:

- In rooms with explosive atmospheres
- Operation for medical purposes

Areas of application

The bar code readers of the BCL 500*i* series are especially designed for the following areas of application:

- Storage and conveying technologies, in particular for object identification on fast-moving conveyor belts
- Pallet transportation applications
- Automobile sector
- Omnidirectional reading

2.4 Working safely

Attention!

Access to or changes on the device, except where expressly described in this operating manual, are not authorized.

Safety regulations

Observe the locally applicable legal regulations and the rules of the employer's liability insurance association.

Qualified personnel

Mounting, commissioning and maintenance of the device must only be carried out by qualified personnel.
Electrical work must be carried out by a certified electrician.

Attention, laser radiation!

If you look into the beam path over a longer time period, the retina of your eye may be damaged!

Never look directly into the beam path!

Do not point the laser beam of the BCL 558i at persons!

When mounting and aligning the BCL 558i, avoid reflections of the laser beam off reflective surfaces!

The BCL 558i bar code readers comply with safety standards EN 60825-1 for a class 2 product. They also comply with the U.S. 21 CFR 1040.10 regulations for a class II laser product except for deviations pursuant to Laser Notice No. 50, dated July 26, 2001.

Radiant Energy: The BCL 558i uses a low power visible laser diode. The emitted wavelength is 655nm. The average laser power is less than 1mW in accordance with the definition of class 2 lasers.

Adjustments: Do not attempt any adjustments to or alterations of this product.

Do not remove the protective housing of the bar code reader. There are no user-serviceable parts inside.

The scanner window is the only aperture through which light may be observed on this product. A failure of the scanner motor, while the laser diode continues to emit a laser beam, may cause emission levels to exceed those for safe operation. The bar code reader has safeguards to prevent this occurrence. If, however, a stationary beam is emitted, the failing bar code reader should be disconnected from its power source immediately.

CAUTION: Use of controls or adjustments or performance of procedures other than specified herein may result in hazardous light exposure.

The use of optical instruments or devices in combination with the device increases the danger of eye damage!

The housing of the BCL 558i is provided with warning notices B and C above and next to the reading window as shown in the following figure:

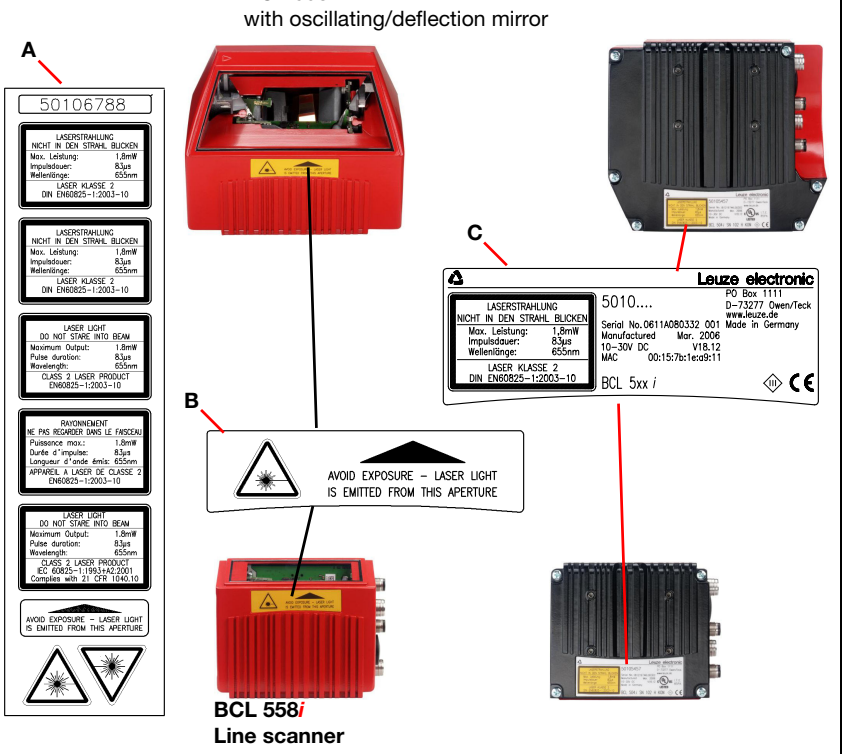

A	Included stick-on labels
B	Aperture label
C	Name plate

Figure 2.1: Attachment of the stick-on labels with warning notices at the BCL 558*i*

Notice!

It is important that you attach the stick-on labels supplied to the device (A in figure 2.1)! If the signs would be covered due to the installation situation of the BCL 558i, attach them instead in the immediate vicinity of the BCL 558i in such a way that it is not necessary to look into the laser beam when reading the notices.

3 Fast commissioning / operating principle

Below you will find a short description for the initial commissioning of the BCL 558*i*. Detailed explanations for all listed points can be found throughout this technical description.

3.1 Mounting the BCL 558*i*

The BCL 558*i* bar code readers can be mounted in 3 different ways:

- Using two M4x6 screws on the rear of the device or using four M4x6 screws on the bottom of the device.
- Using a BT 56 mounting device on the two fastening grooves.

3.2 Device arrangement and selection of the mounting location

In order to select the right mounting location, several factors must be considered:

- Size, orientation, and position tolerance of the bar codes on the objects to be scanned.
- The reading field of the BCL 558*i* in relation to the bar code module width.
- The resulting minimum and maximum reading distance from the respective reading field (see chapter 5.5 "Reading field curves / optical data").
- The permissible cable lengths between the BCL 558*i* and the host system depending on which interface is used.
- The correct time for data output. The BCL 558*i* should be positioned in such a way that, taking into consideration the time required for data processing and the conveyor belt speed, there is sufficient time to e.g. initiate sorting operations on the basis of the read data.
- The display and control panel should be very visible and accessible.
- For configuring and commissioning with the webConfig tool, the USB interface should be easily accessible.

For specific information, please refer to chapter 4.4.

Notice!

The beam exits the BCL 558i as follows for the respective devices:
*- line scanner **parallel** to the **housing base***
*- oscillating mirror and deflection mirror **perpendicular** to the **housing base***
The black areas in figure 6.1 are the housing base. The best read results are obtained when:

- The BCL 558*i* is mounted in such a way that the scanning beam is incident on the bar code at an angle of inclination greater than ±10° … 15° to vertical.
- The reading distance lies in the middle area of the reading field.
- *The bar code labels are of good print quality and have good contrast ratios.*
- You do not use high-gloss labels.
- *There is no direct sunlight.*

3.3 Electrical connection BCL 558*i*

The BCL 558*i* is equipped with four M12 plugs/sockets which are A- and D-coded, and an USB socket of Type A.

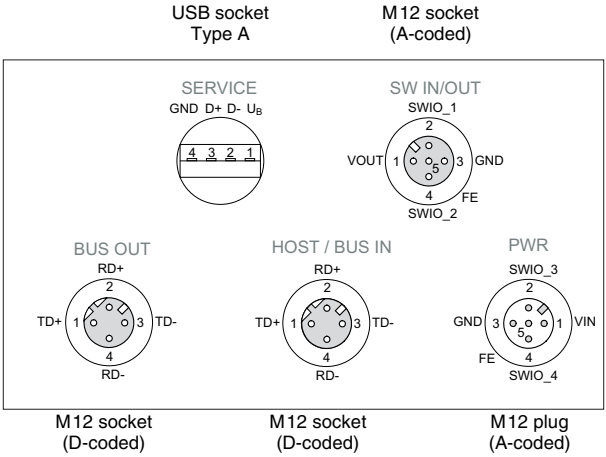

Figure 3.1: Connections of the BCL 558*i*

Voltage supply and switching inputs/outputs

The **voltage supply** (10 … 30VDC) is connected at the **PWR** M12 connector.

Available at both the **PWR** M12 connector as well as at the **SW IN/OUT** M12 socket are **four freely programmable switching inputs/outputs** for custom adaptation to the respective application. Detailed information on this topic can be found in chapter 7.2.

Standalone operation in Ethernet network

During stand-alone operation of the BCL 558*i*, the host interface of the superior system is connected to HOST/BUS IN. Thus, a star structure (Ethernet structure) is possible. Please be certain to select the correct protocol for the connected components.

Network operation in Ethernet network

In network operation, the superior system (PC/PLC) is connected to the host interface of the BCL 558*i*. With the aid of the "switch" integrated in the BCL 558*i*, the bus connection to the next participant, e.g. another BCL 558*i*, can occur directly via the BUS OUT socket!

Notice!

The BCL 558i does not have its own built-in DHCP server. Please make certain that each participant in the Ethernet has its own unique IP address. This can be set by a DHCP server in the primary system or through manual address assignment.

3.4 Starting the device

Connect the supply voltage +10 … 30VDC (typ. +24VDC); the BCL 558i starts up and the bar code reading window appears on the display:

By default, parameter enabling is deactivated and you cannot change any settings. If you wish to carry out the configuration via the display, you must activate parameter enabling. Further information can be found in chapter "Parameter enabling" on page 103.

As a first step, you need to set the communication parameters of the BCL 558*i*.

You can make the necessary settings via the display or via the webConfig tool. Provided here is only a brief description of the settings via the webConfig tool; detailed information can be found in chapter 10.

3.4.1 BCL 558*i* on EtherNet/IP

Commissioning on the EtherNet/IP is performed according to the following scheme:

1. **Address assignment**
   - automatic via DHCP, BootP **or**
   - manual via webConfig (with a USB connection)
2. **Configuration of the participant** depending on the version of the control software:
   - either with the generic Ethernet module **or**
   - installation of the EDS file
3. **Transferring the data** to the control
4. **Adapting the device parameters** via webConfig
5. **Use explicit messaging services**

Notice!

On delivery, the automatic address assignment via DHCP server is defined as the standard setting of the BCL 558i and the IP address is set to 0.0.0.0.

The BCL 558*i* can be configured in the planning tool/control using the **EDS file** (Electronic Data Sheet) if the control supports this. PLC software **RSLogix 5000** from **Rockwell** offers EDS support for EtherNet/IP **from software version 20.00 and up**.

Without PLC support of the EDS integration, the settings are made via the **generic Ethernet module**. In this case, the respective configuration must be entered and adapted manually for each device. The parameter download from the control to the BCL 558*i* is performed during every establishment of connection. Since the parameters are stored centrally in the control, this helps during device exchange.

3.4.2 Manually setting the IP address

If your system does not include a DHCP server or if the IP addresses of the devices are to be set permanently, proceed as follows:

- Have the network administrator specify the data for IP address, net mask and gateway address of the BCL 558*i*.
- Set the IP address manually via the BootP/DHCP server tool and deactivate the DHCP operation in the BCL 558*i*. The BCL 558*i* automatically adopts these settings. A restart is not required.

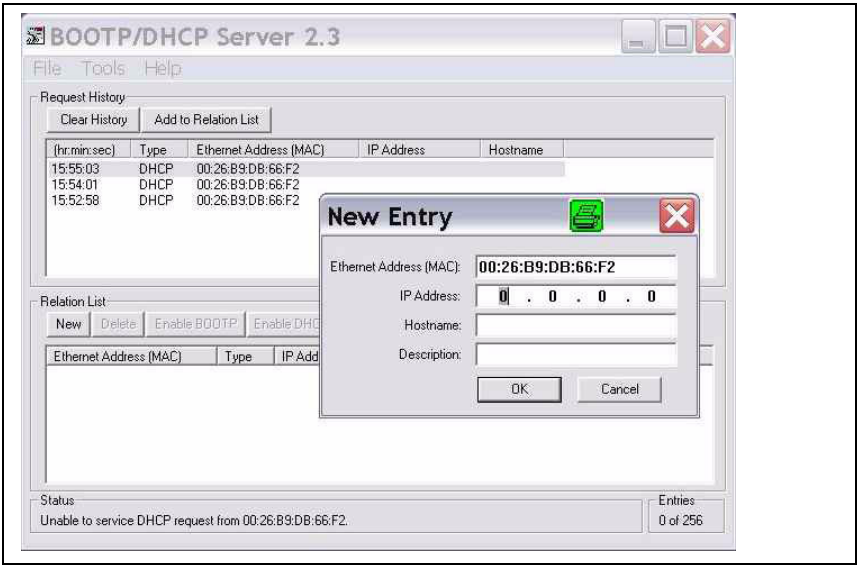

Figure 3.2: Manually setting the IP address

Alternatively, you can set the IP address manually via the webConfig tool. Proceed as follows:

- Have the network administrator specify the data for IP address, net mask and gateway address of the BCL 558*i*.
- Connect the BCL 558*i* to your computer using the service cable.
- Set these values on the BCL 558*i*. Via webConfig:
  `Configuration -> Communication -> Ethernet interface.`

Notice!

If the IP address is set via the webConfig tool, then it becomes active after transfer to the device. A restart is not required.

3.4.3 Configure the participant

Configuration with the generic Ethernet module

In the **RSLogix 5000** configuration tool (up to software version **20.00**), a so-called **generic Ethernet module** is created under the `Communication` path for the BCL 558*i*.

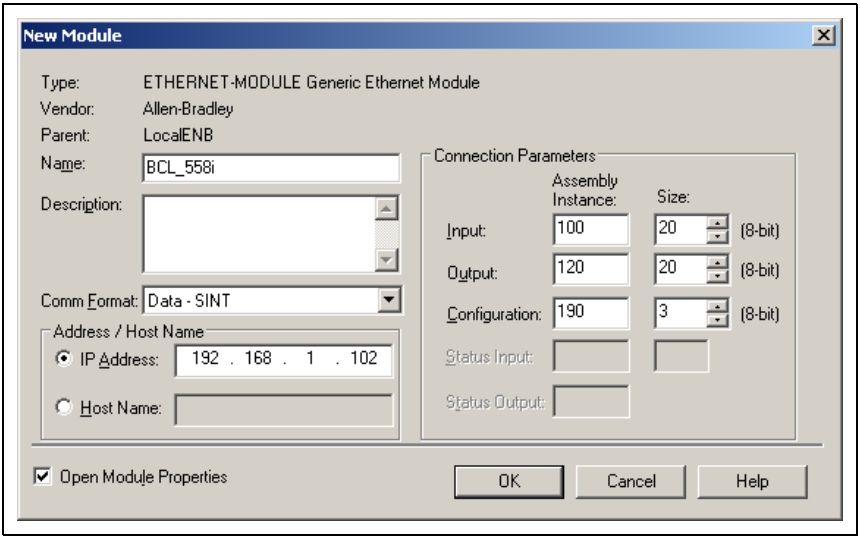

Figure 3.3: Generic Ethernet module

The input mask for the generic module describes the following parameters to be set:

- The name of the participant (can be selected freely; e.g. BCL 558i)
- The format of I/O data (data - SINT = 8 bits)
- The IP address of the participant
- The address and length of the input assembly (instance 100, instance 101 or instance 102; min 1 byte - up to max. 266 bytes for the default input assembly of the read results)
- The address and length of the output assembly (instance 120, instance 121 or instance 122; min 1 byte - up to max. 263 bytes for the default output assembly)
- The address and length of the configuration assembly (instance 190; 3 bytes)

For the exact description of the assemblies for input/output and configuration, please refer to chapter 10.

Configuration of the participant using the EDS file

From software version 20.00 and up, proceed as follows in the **RSLogix 5000** configuration tool to create the BCL 558*i* as an EtherNet/IP participant in your system:

- First, load the EDS file for the device via EDS wizard into the PLC database.

Notice!

You can find the EDS file at: ***www.leuze.com****.*

- After it has downloaded, select the device from the device list.
- Open the input dialog for setting the address and additional parameters by double-clicking on the device symbol and make the desired entries here.
- Finally, transmit the values to the control via download.

3.4.4 Transferring the data to the control (RSLogix 5000 specific)

- Activate online mode
- Select the Ethernet communication port
- Select the processor onto which the project is to be transferred
- Set the control to PROG
- Start the download
- Set the control to RUN

3.5 Further settings

After the basic configuration of the operating mode and the communication parameters, you need to carry out further settings:

- Decoding and processing the read data

  ↳*Define at least one code type with the desired settings.*

  - Via webConfig:
    `Configuration -> Decoder`

- Control of the decoding

  ↳*Configure the connected switching inputs according to your requirements. To do this, first set the I/O mode to Input and then configure the switching behavior:*

  - Via webConfig:
    `Configuration -> Device -> Switching inputs/outputs`

- Control of the switching outputs

  ↳*Configure the connected switching outputs according to your requirements. To do this, first set the I/O mode to Output and then configure the switching behavior:*

  - Via webConfig:
    `Configuration -> Device -> Switching inputs/outputs`

3.6 Bar code reading

With the aid of the "Action menu", you can instruct the BCL 558*i* to read a bar code.

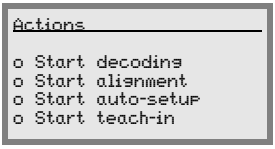

In the main menu, use the ▲▼ buttons to select the Actions menu item. Activate the Actions menu with ↵. Then select Start decoding with ▲▼ and press ↵ again to start the bar code reading operation.

To test, you can use the following bar code in the 2/5 Interleaved format. The bar code module here is 0.5:

The read information appears in the display and is simultaneously passed on to the superior system (PLC or PC).

Please check the incoming data of the bar code information there.

Alternatively, you can connect a photoelectric sensor or a 24 V DC switching signal to the SW IN/OUT socket for read activation. To do this, however, you must appropriately configure the switching input (see chapter 7.2.3 "SW IN/OUT – Switching input/switching output").

4 Device description

4.1 About the bar code readers of the BCL 500*i* series

Bar code readers of the BCL 500*i* series are high-speed scanners with integrated decoder for all commonly used bar codes, e.g. 2/5 Interleaved, Code 39, Code 128, EAN 8/13 etc., as well as codes from the GS1 DataBar family.

Bar code readers of the BCL 500*i* series are available in various optics models as well as line scanners, line scanners with deflection mirrors, oscillating mirrors and also optionally as heated models.

Notice!

Please note: the BCL 558*i* line scanner with deflection mirror (perpendicular beam exit) is currently not available.

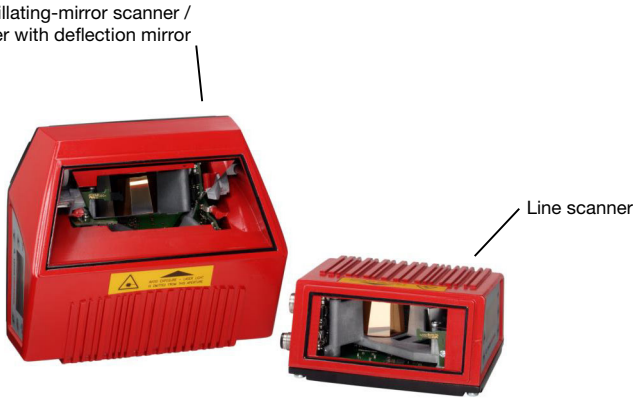

Figure 4.1: Line scanner, line scanner with deflection mirror and oscillating-mirror scanner

The extensive options for device configuration via display or software enable adaptation to a multitude of reading tasks. Due to the large reading distance combined with the great depth of field and a very compact construction, the device is ideally suited for package and pallet transportation systems. In general, the bar code readers of the BCL 500*i* series are designed for the conveyor and storage technology market.

The interfaces (**RS 232**, **RS 485** and **RS 422**) integrated in the various device models and the fieldbus systems (**PROFIBUS DP**, **PROFINET-IO**, **Ethernet TCP/IP / UDP** and **EtherNet/IP**) of the BCL 500*i* series bar code readers offer optimum connection to the superior host system.

4.2 Characteristics of the bar code readers of the BCL 500*i* series

Performance features:

- Integrated fieldbus connectivity = *i* -> Plug-and-Play fieldbus coupling and easy networking
- Numerous interface variants facilitate connection to the superior systems
  - RS 232, RS 422 as well as with integrated multiNet plus master
  - RS 485 and multiNet plus slave
    alternatively, various fieldbus systems, such as
  - PROFIBUS DP
  - PROFINET-IO
  - Ethernet TCP/IP and UDP
  - EtherNet/IP
- Integrated code fragment technology (**CRT**) enables the identification of soiled or damaged bar codes
- Maximum depth of field and reading distances from 200 mm to 2400 mm
- Large optical opening angle and, thus, large reading field width
- High scanning rate from 800 - 1200 scans/s for fast reading tasks
- Intuitive, backlit, multi-language display with user-friendly menu navigation
- Integrated **USB 1.1** service interface
- Adjustment of all device parameters with a web browser
- Connection options for an external parameter memory
- Easy alignment- and diagnosis functions
- M12 connections with Ultra-Lock™ technology
- Four freely programmable switching inputs/outputs for the activation or signaling of states
- Automatic monitoring of the read quality with **autoControl**
- Automatic recognition and setting of the bar code type using **autoConfig**
- Reference code comparison
- Optional heating models to -35 °C
- Heavy-duty housing of protection class IP 65

Notice!

Information on technical data and characteristics can be found in chapter 5.

General information

The integrated fieldbus connectivity = *i* contained in the bar code readers of the BCL 500*i* series facilitates the use of identification systems which function without connector unit or gateways. The integrated fieldbus interface considerably simplifies handling. The Plug-and-Play concept enables easy networking and very simple commissioning: Directly connect the respective fieldbus and all configuration is performed with no additional software.

For decoding bar codes, the bar code readers of the BCL 500*i* series make available the proven **CRT decoder** with code fragment technology:

The proven code fragment technology (**CRT**) enables bar code readers of the BCL 500*i* series to read bar codes with a small bar height, as well as bar codes with a damaged or soiled print image.

With the aid of the **CRT decoder**, bar codes can also be read without problem in other demanding situations, such as with a large tilt angle (azimuth angle or even twist angle).

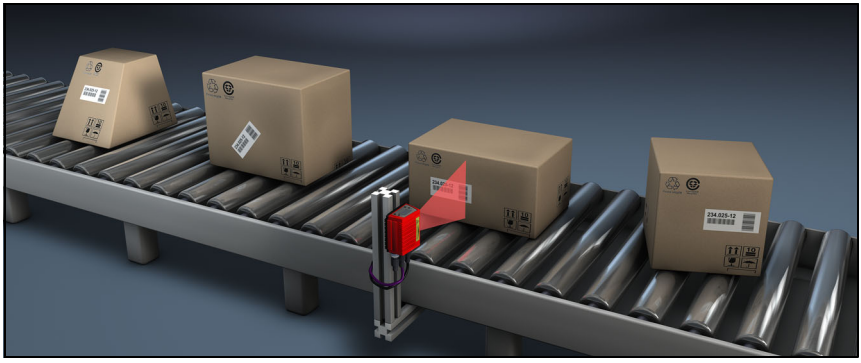

Figure 4.2: Possible bar code orientation

The BCL 558*i* can be operated and configured using the integrated webConfig tool via the USB service interface; alternatively, the bar code readers can be adjusted using configuration commands via the host/service interface.

The BCL 558*i* needs a suitable activation to start a read process as soon as an object is in the reading field. This opens a time window ("reading gate") in the BCL 558*i* for the read process during which the bar code reader has time to detect and decode a bar code.

In the basic setting, triggering takes place through an external reading cycle signal. Alternative activation options include online commands via the host interface and the **autoReflAct** function.

Through the read operation, the BCL 558*i* collects additional useful pieces of data for diagnosis which can also be transmitted to the host. The quality of the read operation can be inspected using the **alignment mode** which is integrated in the webConfig tool.

A multi-language display with buttons is used to operate the BCL 558*i* as well as for visualization purposes. Two LEDs provide additional optical information on the current operating state of the device.

The four freely configurable switching inputs/outputs "SWIO 1 … SWIO 4" can be assigned various functions and control e.g. activation of the BCL 558*i* or external devices, such as a PLC.

System, warning and error messages provide assistance in setup/troubleshooting during commissioning and read operation.

4.3 Device construction

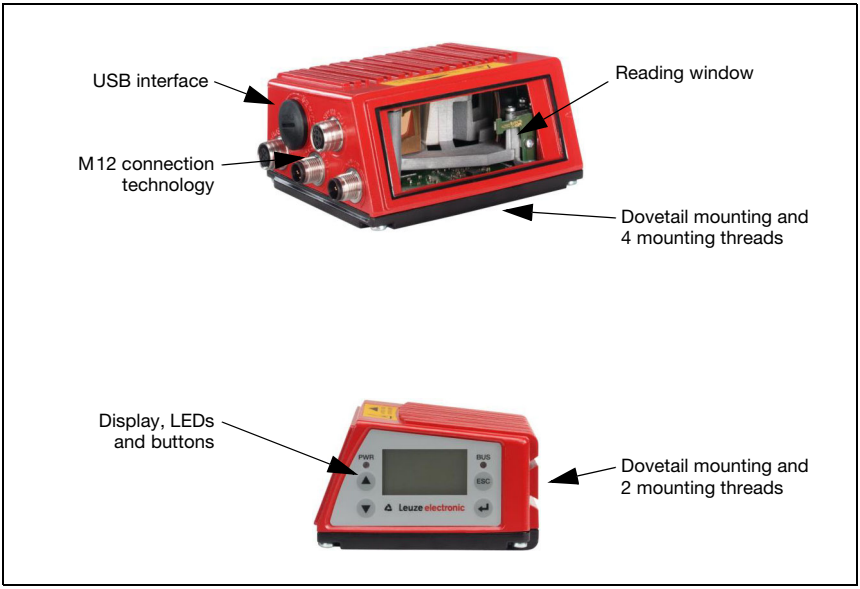

Figure 4.3: Device construction

4.4 Reading techniques

4.4.1 Line scanner (single line)

A line (scan line) scans the label. Due to the opt. opening angle, the reading field width is dependent on the read distance. Through the movement of the object, the entire bar code is automatically transported through the scan line.

The integrated code fragment technology permits twisting of the bar code (tilt angle) within certain limits. These are dependent on the transport speed, the scanning rate of the scanner and the bar code properties.

Areas of application of the line scanner

The line scanner is used:

- when the bars of the bar code are printed in the conveying direction ('ladder arrangement').
- with bar codes having very short bar lengths.
- when the ladder code is turned out of the vertical position (tilt angle).
- when the scanning distance is large.

Figure 4.4: Deflection principle for the line scanner

4.4.2 Line scanner with oscillating mirror

The oscillating mirror deflects the scan line additionally to both sides across the scan direction at a randomly adjustable oscillation frequency. In this way, the BCL 558*i* can also scan larger areas or spaces for bar codes. The reading field height (and the scan line length useful for evaluation) depends on the reading distance due to the optical beam width of the oscillating mirror.

Areas of application of the line scanner with oscillating mirror

For line scanners with oscillating mirror, oscillation frequency, start/stop position etc. are adjustable. It is used:

- when the position of the label is not fixed, e.g. on pallets – various labels can, thus, be detected at various positions.
- when the bars of the bar code are printed perpendicular to the conveying direction ('picket fence arrangement').
- when reading stationary objects.
- when the bar code is turned out of the horizontal position.
- when the scanning distance is large.
- when a large reading field (reading window) has to be covered.

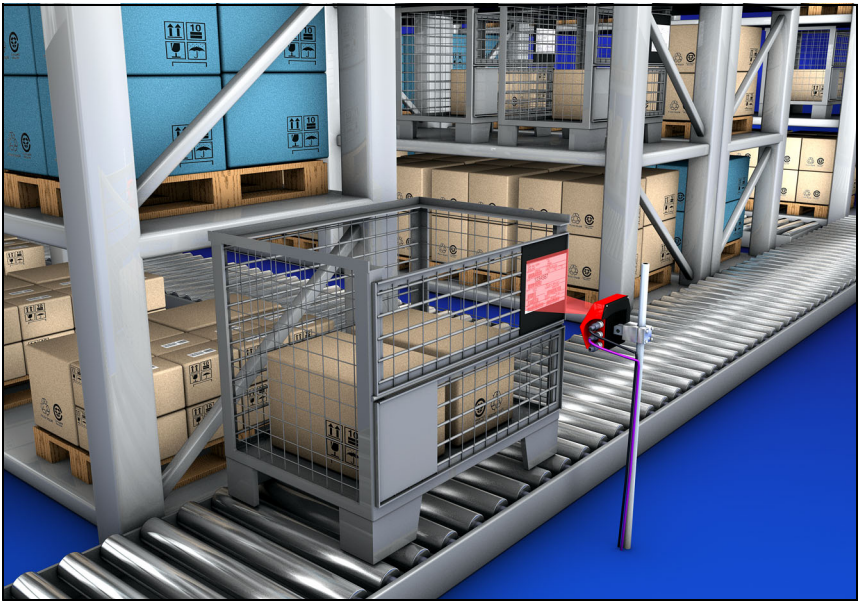

Figure 4.5: Deflection principle for the line scanner with oscillating mirror add-on

4.4.3 Omnidirectional reading

In order to read arbitrarily oriented bar codes on an object, at least 2 bar code readers are necessary. If the bar code is not printed over-square, i.e. bar length > code length, bar code readers with integrated code fragment technology are necessary.

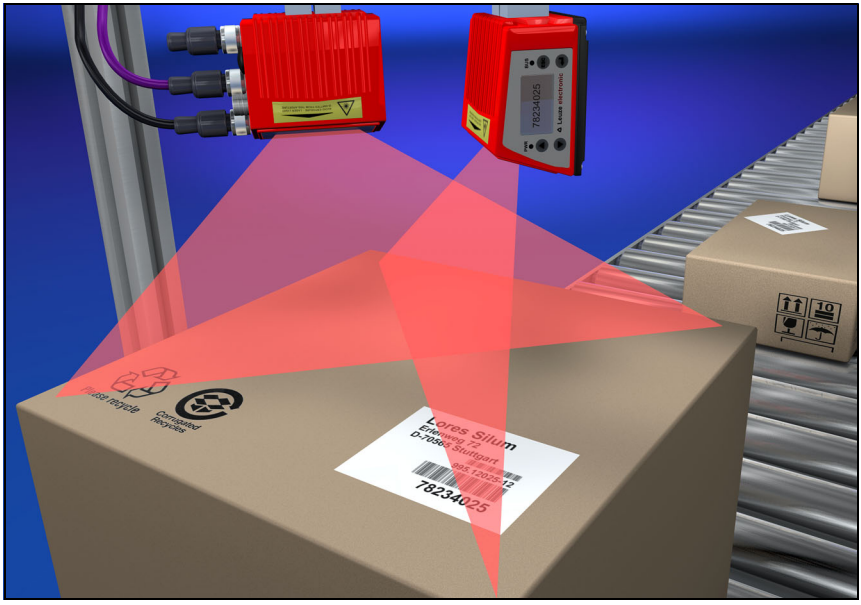

Figure 4.6: Principle arrangement for omnidirectional reading

4.5 Fieldbus systems

Various product variants of the BCL 500*i* series are available for connecting to different fieldbus systems such as PROFIBUS DP, PROFINET-IO, Ethernet and EtherNet/IP.

4.5.1 EtherNet/IP

The BCL 558*i* is designed as an EtherNet/IP device (acc. to IEEE 802.3) with a standard baud rate of 10/100 Mbit. EtherNet/IP makes use of the Common Industrial Protocol (**CIP**) as an application layer for the user. The functionality of the device is defined via parameter sets which are clustered in objects, classes and instances. These are contained in an **EDS** file which, depending on the version of the control software, can be used to configure and integrate the BCL 558*i* into the system. A fixed MAC ID is assigned to each BCL 558*i* by the manufacturer; this ID cannot be changed.

The BCL 558*i* automatically supports the transmission rates of 10 Mbit/s (10Base T) and 100 Mbit/s (100Base TX), as well as auto-negotiation and auto-crossover.

The electrical connection of the supply voltage, the interface and the switching inputs/outputs on the BCL 558*i* is performed via several M12 connectors.

Additional information on the electrical connection can be found in chapter 7.

The BCL 558*i* supports the following protocols and services:

- EtherNet/IP
- DHCP
- HTTP
- ARP
- PING
- Telnet
- BootP

Notice!

*The BCL 558i communicates via the Common Industrial Protocol (**CIP**).*
***CIP Safety**, **CIP Sync** and **CIP Motion** are not supported by the BCL 558i.*

Further information on commissioning can be found in chapter 10.

4.5.2 Ethernet – star topology

The BCL 558*i* can be operated as a single device (stand-alone) in an Ethernet star topology with individual IP address.

The address can either be manually set permanently via the BootP/webConfig tool or assigned dynamically via a DHCP server.

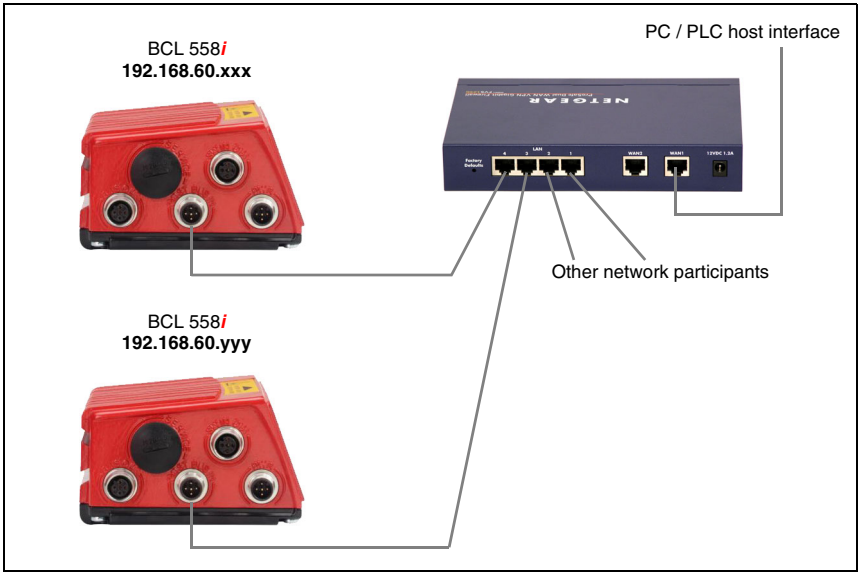

Figure 4.7: Ethernet with star topology

Notice!

*The BCL 558i does **not** support the DLR (Device Level Ring) ring structure determined by the ODVA.*

4.5.3 Ethernet – linear topology

The innovative further development of the BCL 558*i* with integrated switch functionality offers the option of connecting multiple bar code readers of type BCL 558*i* to one another without direct connection to a switch. In addition to the classic "star topology", a "linear topology" is thus also possible.

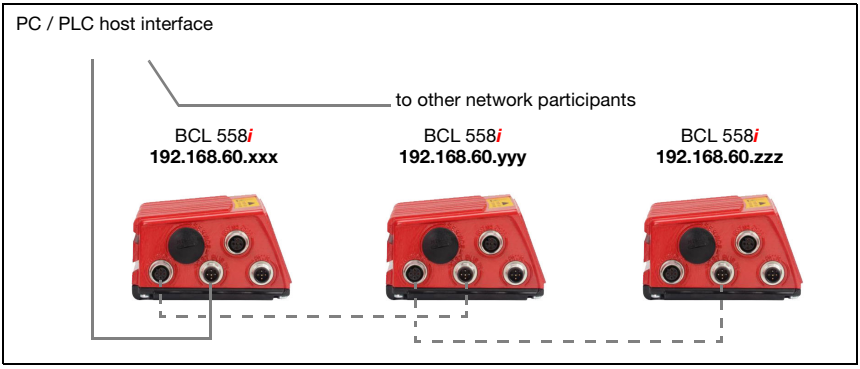

Figure 4.8: Ethernet with linear topology

Each participant in this network requires its own unique IP address which is assigned to it via the DHCP process. Alternatively, the address can be permanently assigned to it manually via BootP or webConfig tool.

The maximum length of a segment (connection from the hub to the last participant) is limited to 100 m.

Notice!

*The BCL 558i does **not** support the DLR (Device Level Ring) ring structure determined by the ODVA.*

4.6 Heater

For low-temperature applications to min. -35°C (e.g. in cold storage), the bar code readers of the BCL 558*i* series can optionally be permanently fitted with a built-in heating and these bar code readers purchased as separate device models.

4.7 External parameter memory

The optionally available external parameter memory – based on a USB memory stick (compatible with version 1.1) – is housed in an external hood with integrated connectors which cover the USB service interface when installed (IP 65).

By having available a copy of the current parameter set of the BCL 558*i*, the external parameter memory makes it easy and reduces the time needed to replace the BCL 558*i* on site. A manual configuration of the exchanged device is thereby omitted.

The procedure for transferring the configuration with the aid of the external parameter memory is described on page 152.

The delivery contents of the external parameter memory include the hood with integrated connectors with unscrewable cover and the USB memory stick.

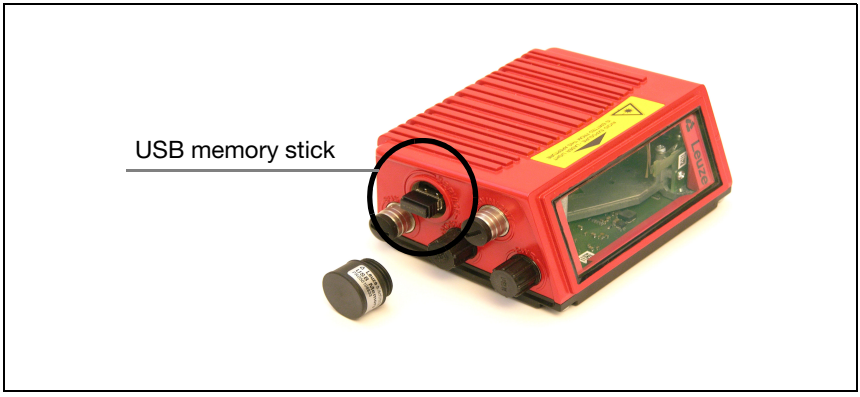

Figure 4.9: External parameter memory

Notice!

To mount, the cover of the service interface must be unscrewed. Then take the USB memory stick and plug it into the USB connection on the BCL 558i. Then, take the connector hood of the USB memory stick and screw this over the plugged-in USB memory stick to the service interface to close the system and ensure protection class IP 65.

4.8 autoReflAct

AutoReflAct stands for **Auto**matic **Refl**ector **Act**ivation and permits an activation without additional sensors. This is achieved by directing the scanner with reduced scanning beam towards a reflector mounted behind the conveyor path. As long as the scanner is targeted at the reflector, the reading gate remains closed. If, however, the reflector is blocked by an object such as a container with a bar code label, the scanner activates the read procedure, and the label on the container is read. When the path from the scanner to the reflector has cleared, the read procedure has completed and the scanning beam is reduced and again directed onto the reflector. The reading gate is closed.

Notice!

You will find a matching reflector in Accessories, and more are available on request.

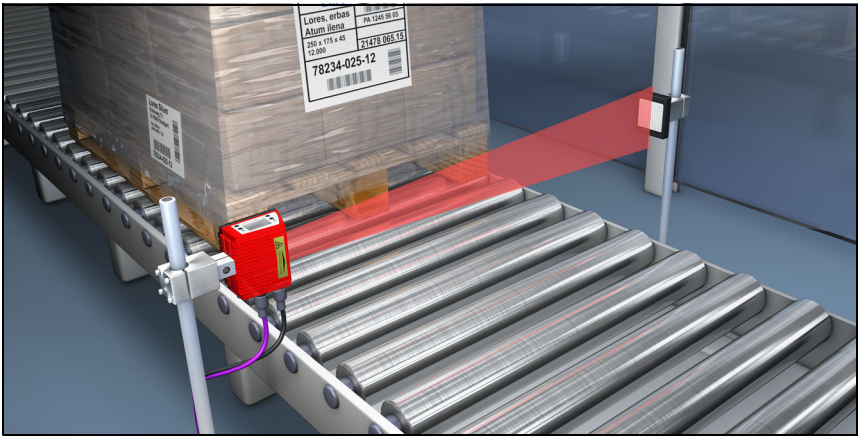

Figure 4.10: Reflector arrangement for autoReflAct

The **autoReflAct** function uses the scanning beam to simulate a photoelectric sensor and thus permits an activation without additional sensory mechanism.

4.9 Reference codes

The BCL 558*i* offers the possibility of storing one or two reference codes.

It is possible to store the reference codes by means of teach-in (display command), via the webConfig tool or via online commands.

The BCL 558*i* can compare read bar codes with one and/or both reference codes and execute user-configurable functions depending on the comparison result.

4.10 autoConfig

With the autoConfig function, the BCL 558*i* offers the user who only wishes to simultaneously read one code type (symbology) with one number of digits an extremely simple and convenient configuration option.

After starting the autoConfig function via the display, switching input or from a superior control, it is sufficient to position a bar code label with the desired code type and number of digits in the reading field of the BCL 558*i*.

Afterward, bar codes with the same code type and number of digits are recognized and decoded.

5 Specifications

5.1 General specifications of the bar code readers

5.1.1 Line scanner

Type	BCL 558*i* EtherNet/IP
Type	**Line scanner without heating**
Optical data	
Light source	Laser diode λ = 650 nm / 655 nm (red light)
Beam exit	Front
Scanning rate	1000 scans/s (adjustable in the range 800 … 1200 scans/s)
Beam deflection	by means of rotating polygon wheel
Useful opening angle	Max. 60°
Optics models / resolution	High Density (**N**): 0.25 … 0.5 mm Medium Density (**M**): 0.35 … 0.8 mm Low Density (**F**): 0.5 … 1.0 mm Ultra Low Density (**L**): 0.7 … 1.0 mm
Read distance	See reading field curves
Laser safety class	2 acc. to EN 60825-1, CDRH (U.S. 21 CFR 1040.10)
Bar code data	
Code types	2/5 Interleaved, Code 39, Code 128, EAN 128, EAN / UPC, Codabar, Code 93, GS 1 Databar
Bar code contrast (PCS)	>= 60 %
External light tolerance	2000 lx (on the bar code)
Number of bar codes per scan	6

Table 5.1: Specifications of the BCL 558*i* line scanners without heating

Type	BCL 558*i* EtherNet/IP
Type	**Line scanner without heating**
Electrical data	
Interface type	2x Ethernet on 2x M12 (D)
Protocols	EtherNet/IP
Baud rate	10/100 MBaud
Data formats	
Service interface	USB 1.1 compatible, A-coded
Switching input / switching output	4 switching inputs/outputs, freely programmable functions - Switching input: 10 … 30 VDC depending on supply voltage, I max. = 8 mA - Switching output: 10 … 30 VDC, depending on supply voltage, I max. = 100 mA (short-circuit proof) Switching inputs/outputs are protected against polarity reversal!
Operating voltage	10 … 30 VDC (Class II, Safety Class III)
Power consumption	Max. 10 W
Operating and display elements	
Display	Monochromatic graphical display, 128 x 64 pixel, with background lighting
Keyboard	4 buttons
LEDs	2 LEDs for power (PWR) and bus state (NET), two-colored (red/green)
Mechanical data	
Protection class	IP 65 (with screwed-on M12 connectors or mounted caps)
Weight	1.1 kg
Dimensions (W x H x D)	63 x 123.5 x 106.5 mm
Housing	Diecast aluminum
Environmental data	
Operating temperature range	0 °C … +40 °C
Storage temperature range	-20 °C … +70 °C
Air humidity	Max. 90 % rel. humidity, non-condensing
Vibration	IEC 60068-2-6, test FC
Shock	IEC 60068-2-27, test Ea
Continuous shock	IEC 60068-2-29, test Eb
Electromagnetic compatibility	EN 55022; IEC 61000-6-2 (contains IEC 61000-4-2, -3, -4, -5 and -6) [1)]

Table 5.1: Specifications of the BCL 558*i* line scanners without heating

1) This is a Class A product. In a domestic environment this product may cause radio interference, in which case the operator may be required to take adequate measures.

Attention!

For UL applications, use is permitted exclusively in Class 2 circuits according to NEC (National Electric Code).

The BCL 558*i* bar code readers are designed in accordance with safety class III for supply by PELV (protective extra-low voltage with reliable disconnection).

5.1.2 Oscillating-mirror scanner

Specifications are the same as for line scanner without heating with the following differences:

Type	**BCL 558*i* EtherNet/IP**
Type	**Oscillating-mirror scanner without heating**
Optical data	
Beam exit	Lateral zero position at an angle of 90°
Beam deflection	Via rotating polygon wheel (horizontal) and stepping motor with mirror (vertical)
Oscillation frequency	0 … 10 Hz (adjustable, max. frequency is dependent on set swivel angle)
Max. swivel angle	±20°(adjustable)
Reading field height	See reading field curves
Electrical data	
Power consumption	Max. 14 W
Mechanical data	
Weight	1.5 kg
Dimensions (W x H x D)	84 x 173 x 147 mm

Table 5.2: Specifications of the BCL 558*i* oscillating-mirror scanners without heating

5.1.3 Line scanner with deflection mirror

Notice!

Please note: the BCL 558i line scanner with deflection mirror (perpendicular beam exit) is currently not available.

Specifications are the same as for line scanner without heating with the following differences:

Type	BCL 558*i* EtherNet/IP
Type	**Line scanner with deflection mirror without heating**
Optical data	
Beam exit	Lateral zero position at an angle of 90°
Beam deflection	Via rotating polygon wheel (horizontal) and deflection mirror (vertical)
Max. optical adjustment range of the beam exit	±10° (adjustable via display or software)
Electrical data	
Power consumption	Max. 11W
Mechanical data	
Weight	1.4kg
Dimensions (WxHxD)	84 x173 x147mm

Table 5.3: Specifications of the BCL 558*i* deflection mirror scanners without heating

5.2 Heating models of the bar code readers

The BCL 558*i* bar code readers are optionally available as models with integrated heating. In this case, heating is permanently installed ex works. Self-installation on-site by the user is not possible!

Features

- Integrated heating (permanently installed)
- Extends the application range of the BCL 558*i* to -35°C
- Supply voltage 24VDC ±20%
- BCL 558*i* enabling through an internal temperature switch (switch-on delay about 30min for 24VDC and minimum ambient temperature of -35°C)
- Necessary conductor cross-section for the voltage supply: at least 0.75mm²; the use of ready-made cables is, thus, not possible.

Construction

The heating consists of two parts:

- The front cover heater
- The housing heater

Function

When the 24VDC supply voltage is applied to the BCL 558*i*, a temperature switch initially only connects the heating to electrical power (front cover heater and housing heater). During the heating phase (around 30min), when the inside temperature rises above 15°C, the temperature switch connects the BCL 558*i* to the supply voltage. This is followed by the self test and the changeover to read operation. The "PWR" LED lights up showing overall readiness for operation.

When the inside temperature reaches approximately 18 °C, another temperature switch turns the housing heater off and, if necessary, back on again (if the inside temperature drops below 15 °C). This does not interrupt the read operation. The front cover heater remains activated until an inside temperature of 25 °C is reached. At temperatures above this, the front cover heater switches off and, with a switching hysteresis of 3 °C, back on again at an inside temperature below 22 °C.

Electrical connection

The required core cross-section of the connection cable for the voltage supply must be at least 0.75 mm².

Attention!

The voltage supply must not be looped through from one device to the next.

Power consumption

The energy requirement depends on the model:

- the line scanner with heating typically consumes 40 W and a maximum of 50 W power.
- the line scanner with oscillating mirror and heating typically consumes 60 W and a maximum of 75 W.

These values are based on operation with unconnected switching outputs.

5.2.1 Line scanner with heating

Specifications are the same as for line scanner without heating with the following differences:

Type	**BCL 558*i* EtherNet/IP**
Type	**Line scanner with heating**
Electrical data	
Operating voltage	24 VDC ±20 %
Power consumption	Max. 50 W
Structure of the heating	Housing heating and separate heating of the optics glass
Warmup time	Min. 30 min at +24 VDC and an ambient temperature of -35° C
Min. conductor cross-section	Conductor cross-section of at least 0.75 mm² for the supply-voltage supply line. Wiring through of the voltage supply to multiple heating devices is **not** permissible. Standard, M12 ready-made cable **not** usable (insufficient cable cross-section)
Environmental data	
Operating temperature range	-35 °C … +40 °C
Storage temperature range	-20 °C … +70 °C

Table 5.4: Specifications of the BCL 558*i* line scanners with heating

5.2.2 Oscillating-mirror scanner with heating

Specifications are the same as for line scanner without heating with the following differences:

Type	BCL 558*i* EtherNet/IP
Type	**Oscillating-mirror scanner with heating**
Optical data	
Useful opening angle	Max. 50°
Max. swivel angle	±12°(adjustable)
Electrical data	
Operating voltage	24VDC ±20%
Power consumption	Max. 75W
Structure of the heating	Housing heating and separate heating of the optics glass
Warmup time	Min. 30min at +24VDC and an ambient temperature of -35°C
Min. conductor cross-section	Conductor cross-section of at least 0.75mm² for the supply-voltage supply line. Wiring through of the voltage supply to multiple heating devices is **not** permissible. Standard, M12 ready-made cable **not** usable (insufficient cable cross-section)
Environmental data	
Operating temperature range	-35°C … +40°C
Storage temperature range	-20°C … +70°C

Table 5.5: Specifications of the BCL 558*i* oscillating-mirror scanners with heating

5.2.3 Line scanner with deflection mirror and heating

Notice!

Please note: the BCL 558i line scanner with deflection mirror (perpendicular beam exit) and heating is currently not available.

Specifications are the same as for line scanner without heating with the following differences:

Type	**BCL 558*i* EtherNet/IP**
Type	**Deflection mirror scanner with heating**
Optical data	
Useful opening angle	Max. 50°
Max. adjustment range	±10°(adjustable via display or software)
Electrical data	
Operating voltage	24VDC ±20%
Power consumption	Max. 75W
Structure of the heating	Housing heating and separate heating of the optics glass
Warmup time	Min. 30min at +24VDC and an ambient temperature of -35°C
Min. conductor cross-section	Conductor cross-section of at least 0.75mm² for the supply-voltage supply line. Wiring through of the voltage supply to multiple heating devices is **not** permissible. Standard, M12 ready-made cable **not** usable (insufficient cable cross-section)
Environmental data	
Operating temperature range	-35°C … +40°C
Storage temperature range	-20°C … +70°C

Table 5.6: Specifications of the BCL 558*i* deflection mirror scanners with heating

5.3 Dimensioned drawings

5.3.1 Line scanner with / without heating

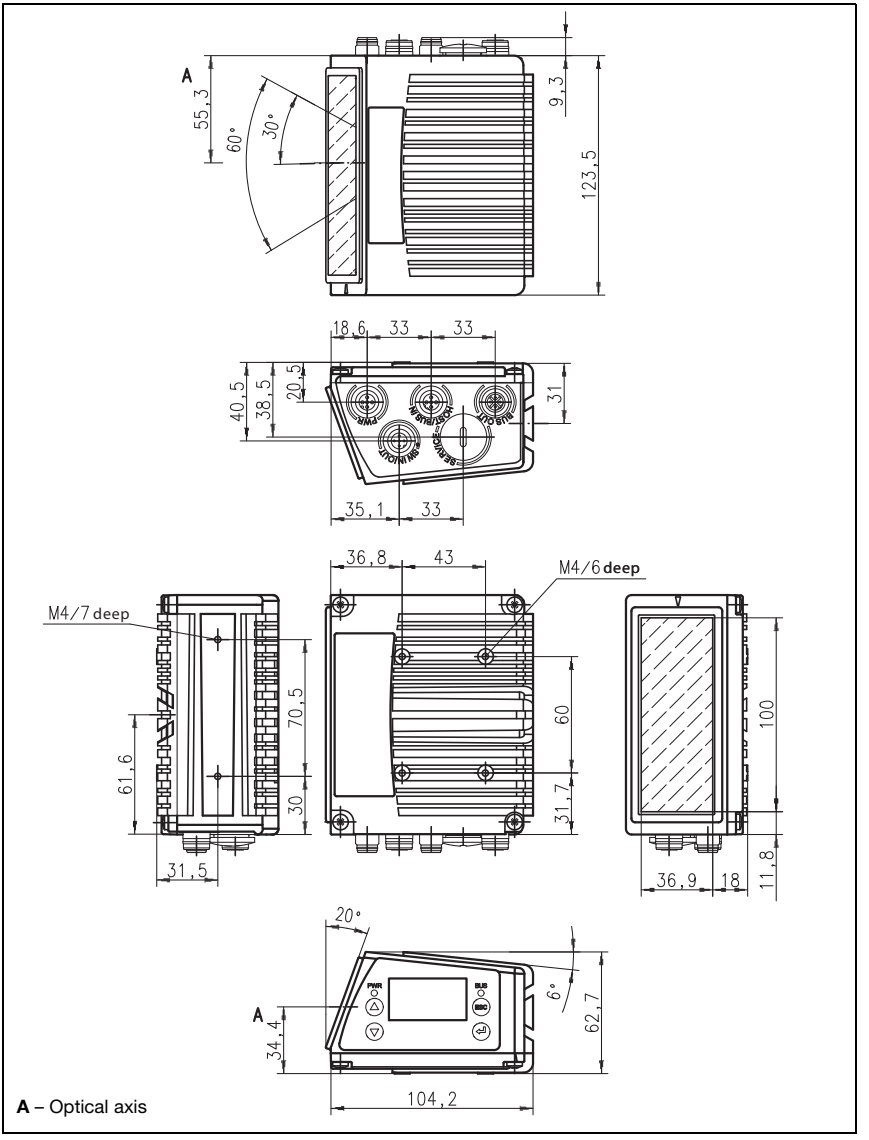

Figure 5.1: Dimensioned drawing BCL 558*i* line scanner S…102

5.3.2 Deflection mirror scanner with / without heating

Notice!

Please note: the BCL 558i line scanner with deflection mirror (perpendicular beam exit) is currently not available.

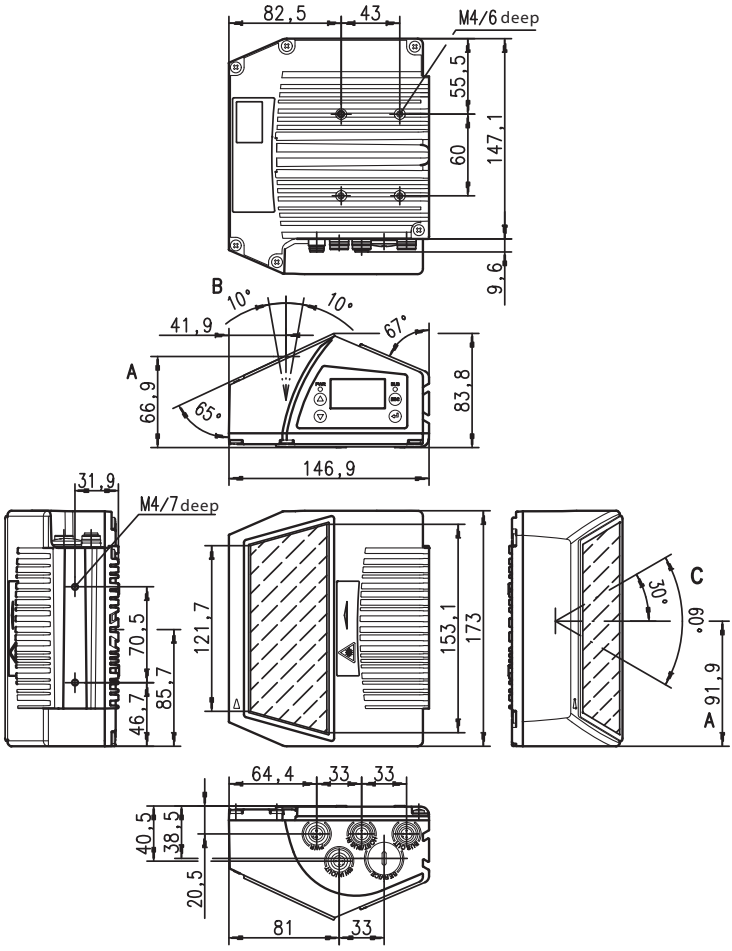

A – Optical axis
B – Optical adjustment range
C – Opening angle
The opening angle is reduced on devices with heating, see "Reading field curves for heating devices" on page 54.

Figure 5.2: Dimensioned drawing BCL 558*i* deflection-mirror scanner S…100

5.3.3 Oscillating-mirror scanner with / without heating

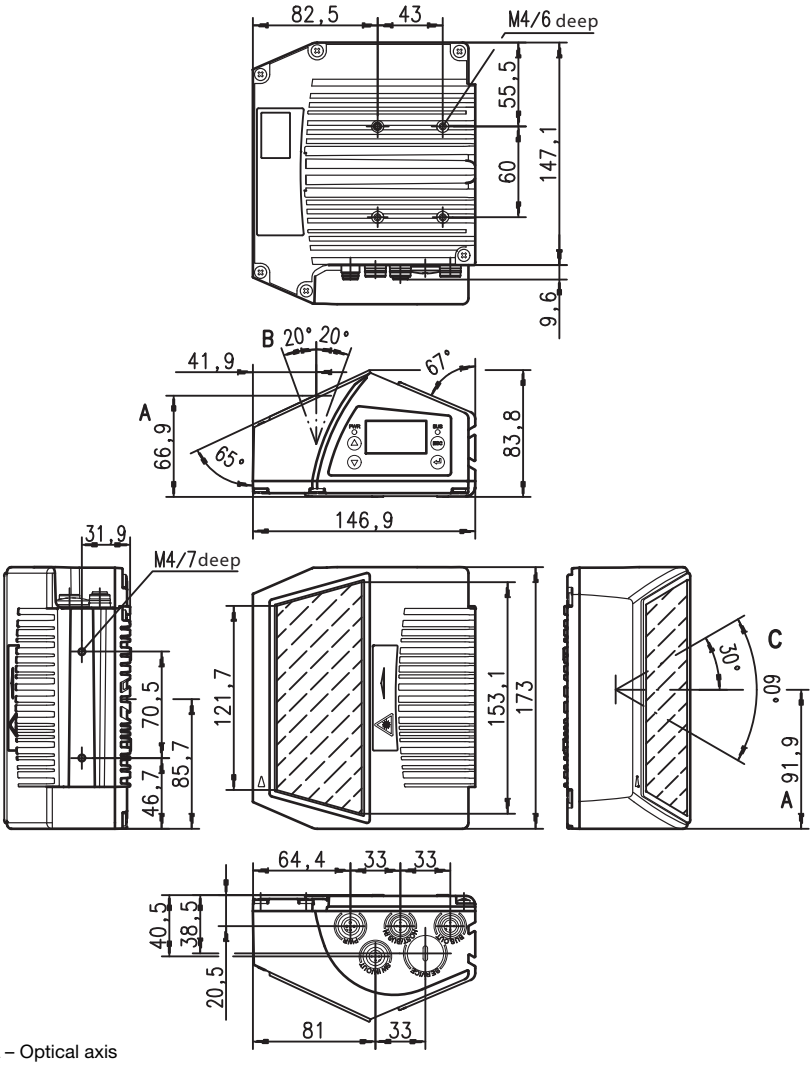

A – Optical axis
B – Optical swivel range
C – Opening angle
The optical swivel range and the opening angle are reduced on devices with heating, see "Reading field curves for heating devices" on page 54.

Figure 5.3: Dimensioned drawing BCL 558*i* oscillating-mirror scanner 0…100

5.4 Type overview BCL 558*i*

BCL 558i family

(EtherNet/IP / 2x Ethernet on 2x M12 D-coded)

Type designation	Description	Part no.
High Density Optics (m = 0.25 … 0.5mm)		
BCL 558*i* SN 102	Line scanner, beam exit at the front	50122787
BCL 558*i* ON 100	Oscillating-mirror scanner	50122776
BCL 558*i* SN 102 H	Line scanner, beam exit at the front, with heating	50122788
BCL 558*i* ON 100 H	Oscillating-mirror scanner with heating	50122780
Medium Density Optics (m = 0.35 … 1.0mm)		
BCL 558*i* SM 102	Line scanner, beam exit at the front	50122785
BCL 558*i* OM 100	Oscillating-mirror scanner	50122773
BCL 558*i* SM 102 H	Line scanner, beam exit at the front, with heating	50122786
BCL 558*i* OM 100 H	Oscillating-mirror scanner with heating	50122775
Low Density Optics (m = 0.5 … 1.0mm)		
BCL 558*i* SF 102	Line scanner, beam exit at the front	50122781
BCL 558*i* OF 100	Oscillating-mirror scanner	50122769
BCL 558*i* SF 102 H	Line scanner, beam exit at the front, with heating	50122782
BCL 558*i* OF 100 H	Oscillating-mirror scanner with heating	50122770
Ultra Low Density Optics (m = 0.7 … 1.0mm)		
BCL 558*i* SL 102	Line scanner, beam exit at the front	50122783
BCL 558*i* OL 100	Oscillating-mirror scanner	50122771
BCL 558*i* SL 102 H	Line scanner, beam exit at the front, with heating	50122784
BCL 558*i* OL 100 H	Oscillating-mirror scanner with heating	50122772

Table 5.7: Type overview BCL 558*i*

Notice!

Please note: the BCL 558i line scanner with deflection mirror (perpendicular beam exit) is currently not available.

5.5 Reading field curves / optical data

Bar code characteristics

Notice!

Please note that the size of the bar code module influences the maximum reading distance and the width of the reading field. Therefore, when selecting a mounting location and/or the bar code label, take into account the different reading characteristics of the scanner with various bar code modules.

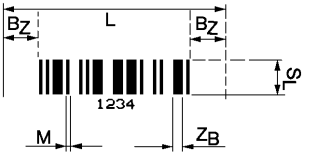

M = Module: The narrowest line or space of a bar code in mm

Z_B = Wide element: Wide lines and spaces are a multiple (ratio) of the module.
Module x Ratio = Z_B (Normal Ratio 1 : 2.5)

B_Z = Quiet zone: The quiet zone should be at least 10 times the module, but not less than 2.5mm.

L = Code length: The length of the bar code in mm including the start and stop characters. The quiet zone is included depending on the code definition.

S_L = Bar length: Height of the elements in mm

Figure 5.4: The most important characteristics of a bar code

The range in which the bar code can be read by the BCL 558*i* (the so-called reading field) depends on the quality of the printed bar code and its dimensions.

Therefore, above all, the module of a bar code is decisive for the size of the reading field.

Notice!

A rule of thumb: The smaller the module of the bar code is, the smaller the maximum reading distance and reading field width will be.

5.6 Reading field curves

Notice!

Please notice that the real reading fields are also influenced by factors such as labeling material, printing quality, scanning angle, printing contrast etc., and may thus deviate from the reading fields specified here.

The zero position of the reading distance always refers the front edge of the housing of the beam exit and is shown in figure 5.5 for the two housing types of the BCL 558*i*.

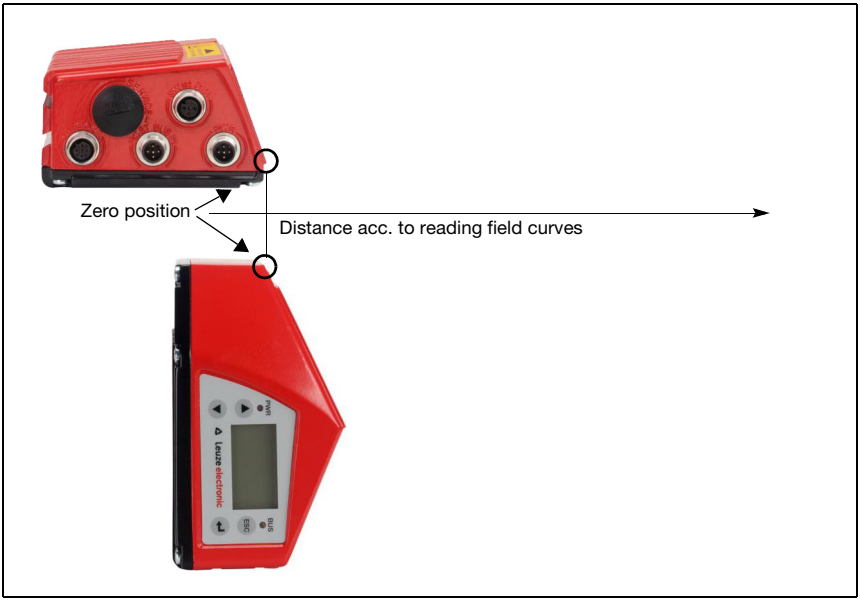

Figure 5.5: Zero position of the reading distance

Reading conditions for the reading field curves

Bar code type	2/5 Interleaved
Ratio	1:2,5
ANSI specification	class A
Reading rate	> 75%

Table 5.8: Reading conditions

5.6.1 High Density (N) Optics: BCL 558*i* SN 100/102

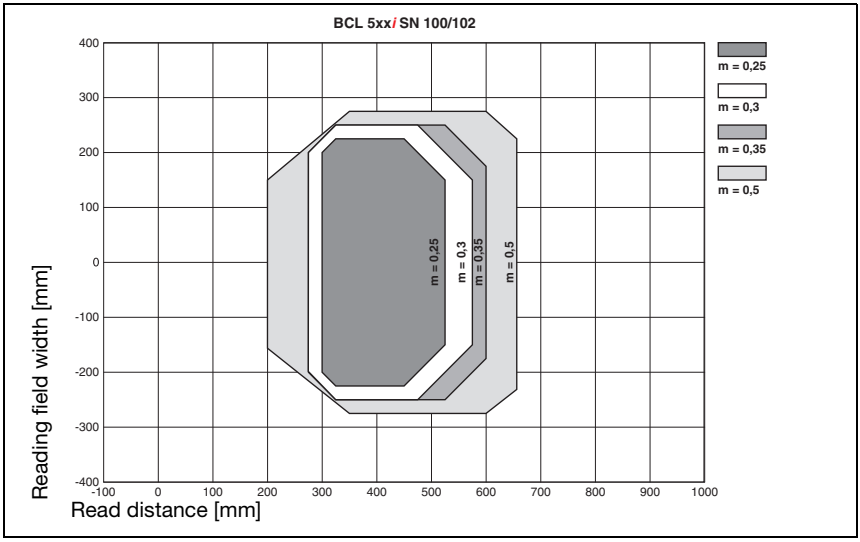

Figure 5.6: "High Density" reading field curve for line scanner (with/without deflection mirror)

The reading field curve applies for the reading conditions stated in table 5.8.

Notice!

Please note: the BCL 558*i* line scanner with deflection mirror (perpendicular beam exit) is currently not available.

5.6.2 High Density (N) Optics: BCL 558*i* ON 100

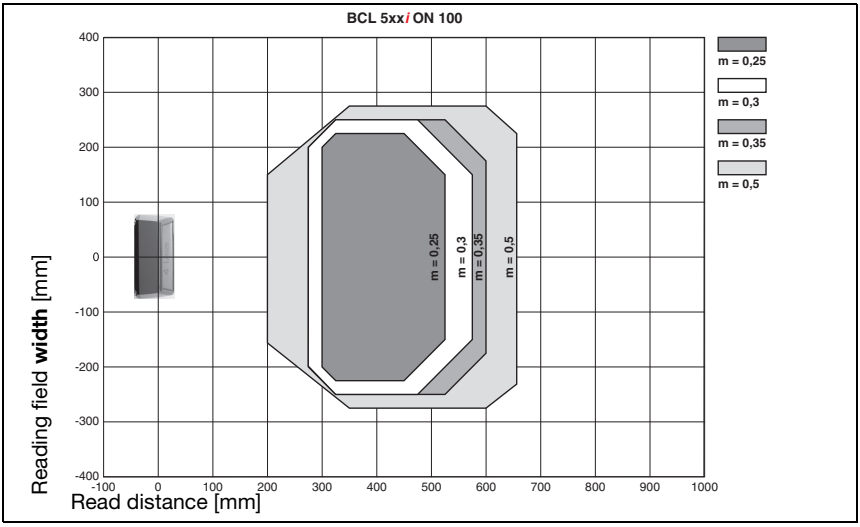

Figure 5.7: "High Density" reading field curve for oscillating-mirror scanners

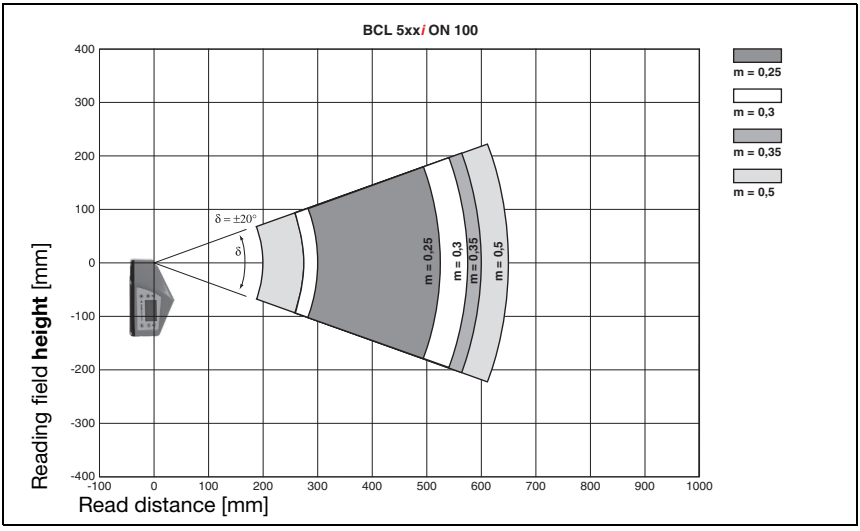

Figure 5.8: Lateral "High Density" reading field curve for oscillating-mirror scanners

The reading field curves apply for the reading conditions stated in table 5.8.

5.6.3 Medium Density (M) Optics: BCL 558*i* SM 100/102

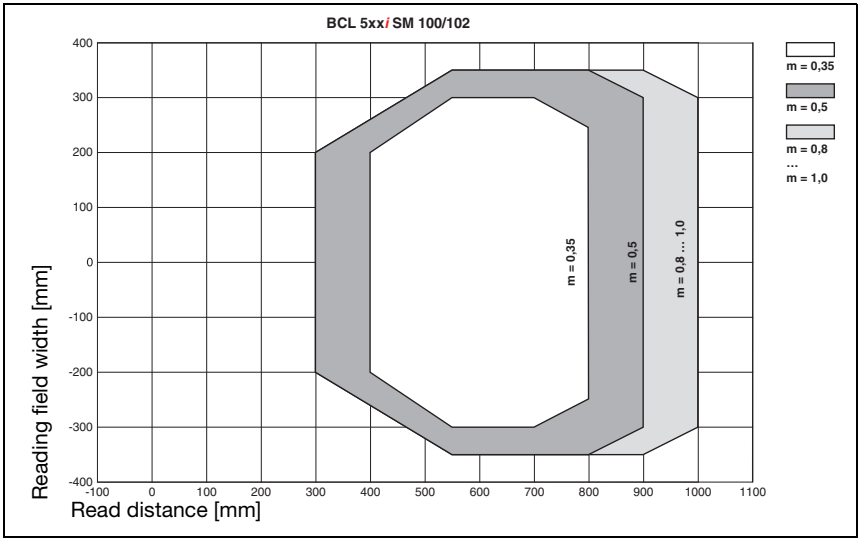

Figure 5.9: "Medium Density" reading field curve for line scanner (with/without deflection mirror)

The reading field curves apply for the reading conditions stated in table 5.8.

Notice!

Please note: the BCL 558*i* line scanner with deflection mirror (perpendicular beam exit) is currently not available.

5.6.4 Medium Density (M) Optics: BCL 558*i* OM 100

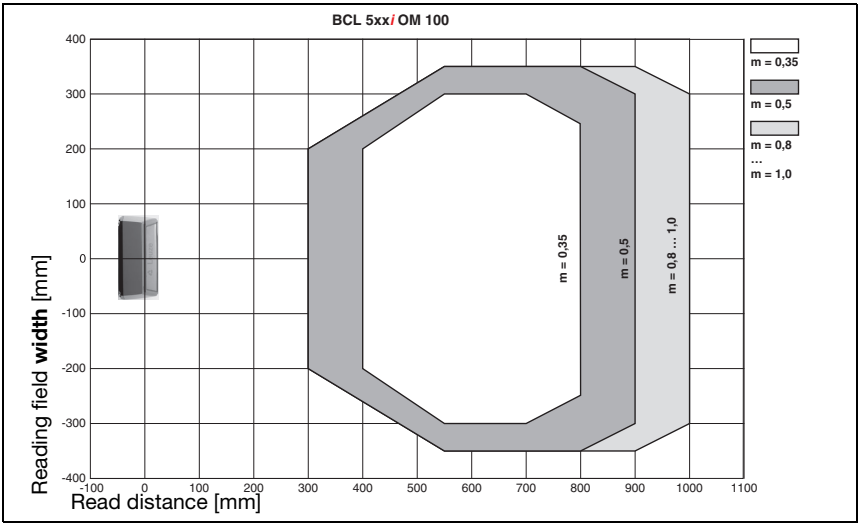

Figure 5.10: "Medium Density" reading field curve for oscillating-mirror scanners

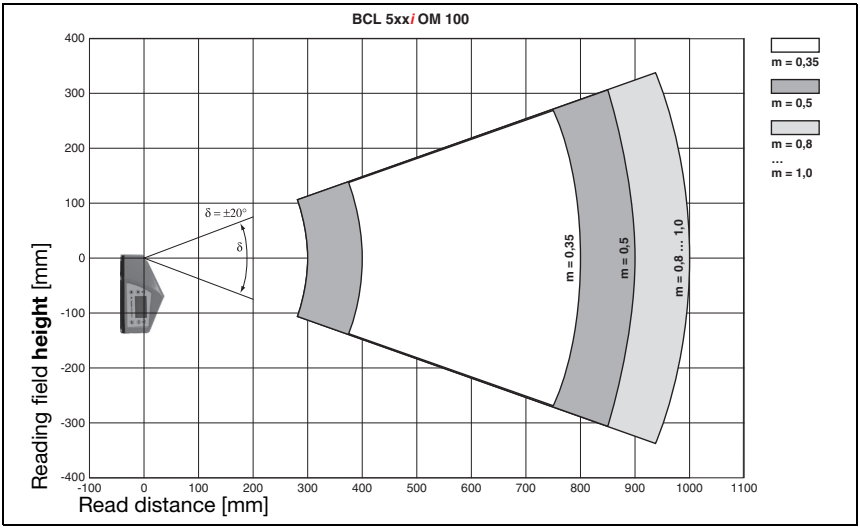

Figure 5.11: Lateral "Medium Density" reading field curve for oscillating-mirror scanners

The reading field curves apply for the reading conditions stated in table 5.8.

5.6.5 Low Density (F) Optics: BCL 558*i* SF 100/102

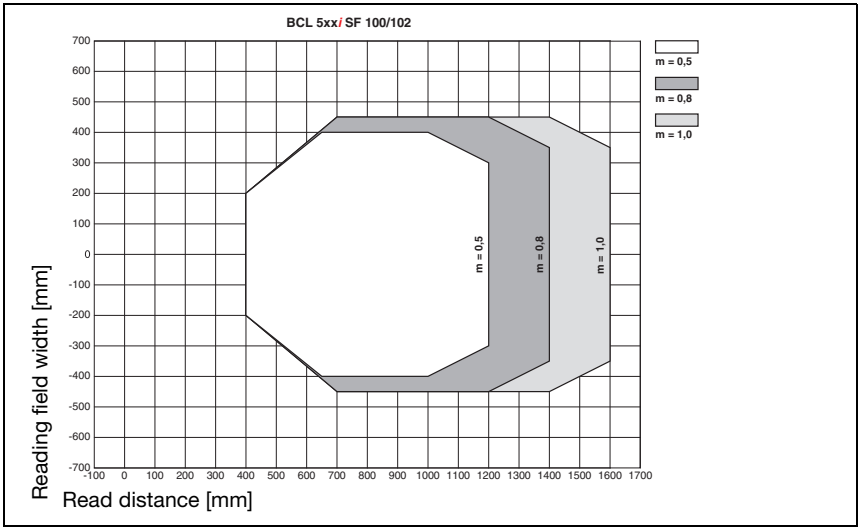

Figure 5.12: "Low Density" reading field curve for line scanner (with/without deflection mirror)

The reading field curves apply for the reading conditions stated in table 5.8.

Notice!

Please note: the BCL 558*i* line scanner with deflection mirror (perpendicular beam exit) is currently not available.

5.6.6 Low Density (F) Optics: BCL 558*i* OF 100

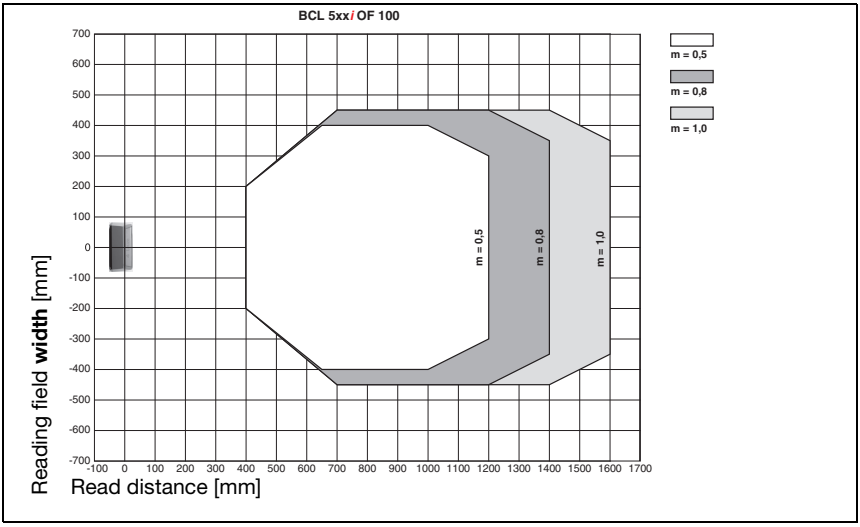

Figure 5.13: "Low Density" reading field curve for oscillating-mirror scanners

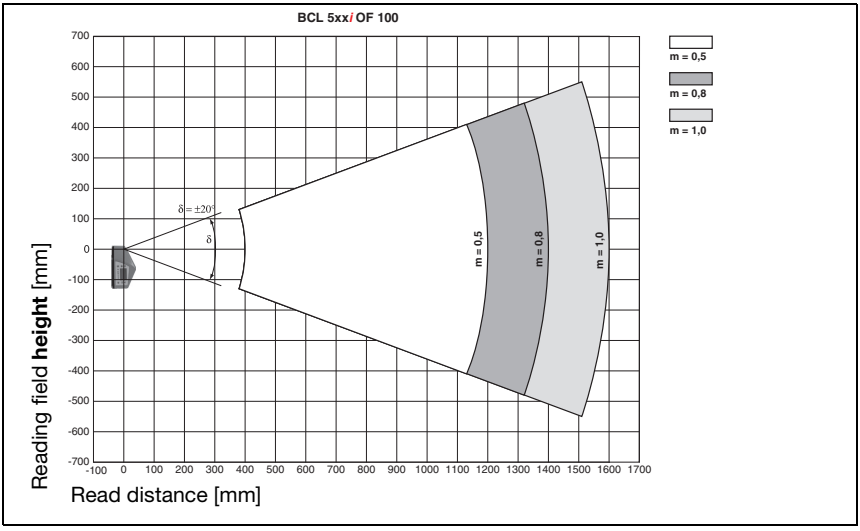

Figure 5.14: Lateral "Low Density" reading field curve for oscillating-mirror scanners

The reading field curves apply for the reading conditions stated in table 5.8.

5.6.7 Ultra Low Density (L) Optics: BCL 558*i* SL 102

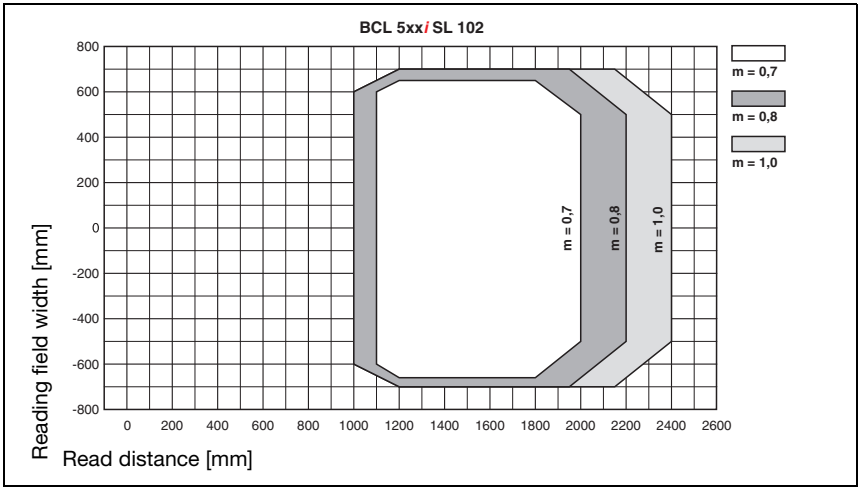

Figure 5.15: "Ultra Low Density" reading field curve for line scanner without deflection mirror

The reading field curves apply for the reading conditions stated in table 5.8.

Notice!

Please note: the BCL 558*i* line scanner with deflection mirror (perpendicular beam exit) is currently not available.

5.6.8 Ultra Low Density (L) Optics: BCL 558*i* OL 100

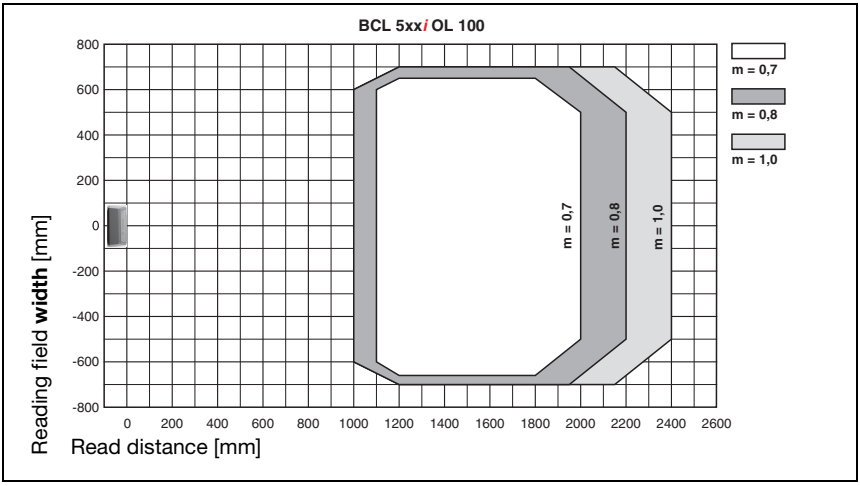

Figure 5.16: "Ultra Low Density" reading field curve for oscillating-mirror scanners

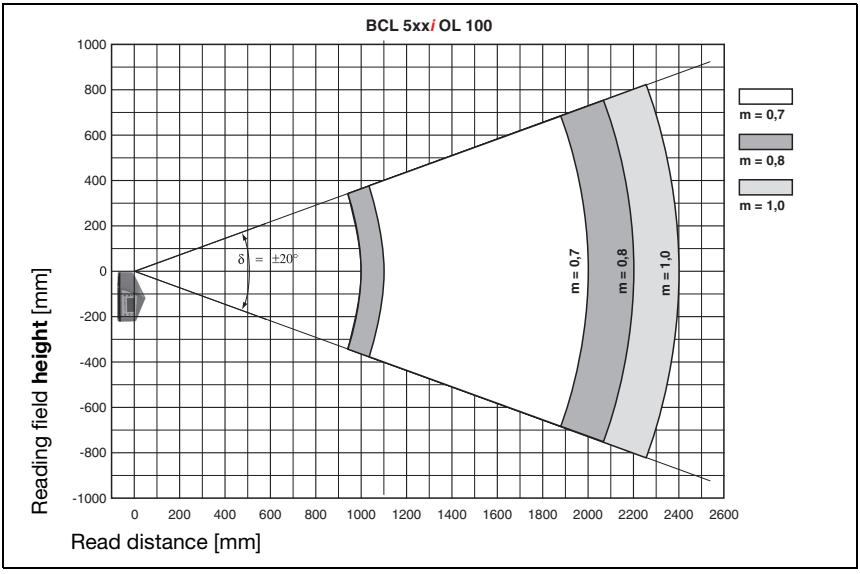

Figure 5.17: Lateral "Ultra Low Density" reading field curve for oscillating-mirror scanners

The reading field curves apply for the reading conditions stated in table 5.8.

5.7 Reading field curves for heating devices

The reading field curves of the heating devices differ to some extent from the normal reading curves due to the optics heating and are somewhat reduced in the reading field width as well as in the reading field height!

- **The maximum opening angle** for all oscillating and deflection mirror devices (BCL 558*i*…**100 H**) **is reduced to ±28°** (without heating = ±30°).
- **In addition, the maximum swivel range** for all oscillating mirror devices (BCL 558*i* **O**…**100 H**) **is reduced to ±12°** (without heating = ±20°). The deflection mirror models (BCL 558*i* **S**…**100 H**) are not affected by this limitation.
- The reading field curves and opening angles are unchanged for all line scanners with heating (BCL 558*i* **S**…**102 H**).

For details, please refer to the following reading field curves for the heating devices.

5.7.1 High Density (N) Optics: BCL 558*i* SN 102 H

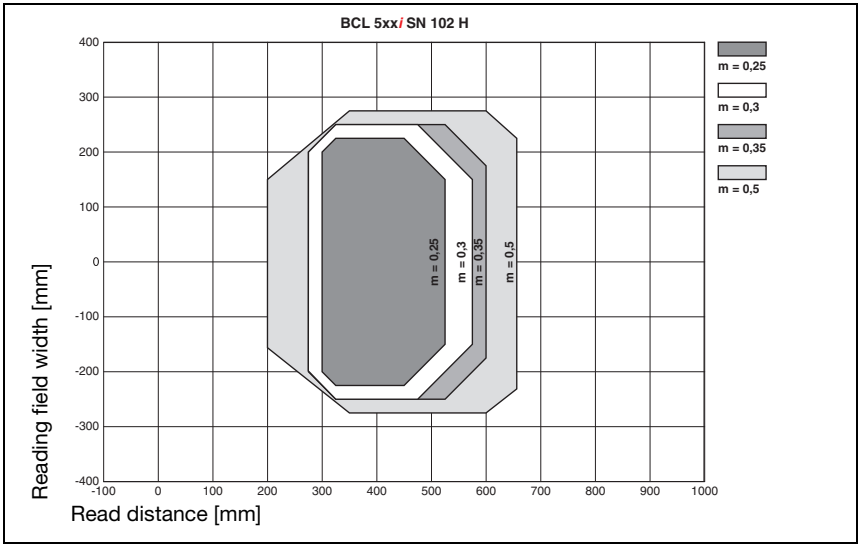

Figure 5.18: "High Density" reading field curve for line scanner with heating (without deflection mirror)

The reading field curve applies for the reading conditions stated in table 5.8.

5.7.2 High Density (N) Optics: BCL 558*i* SN 100 H

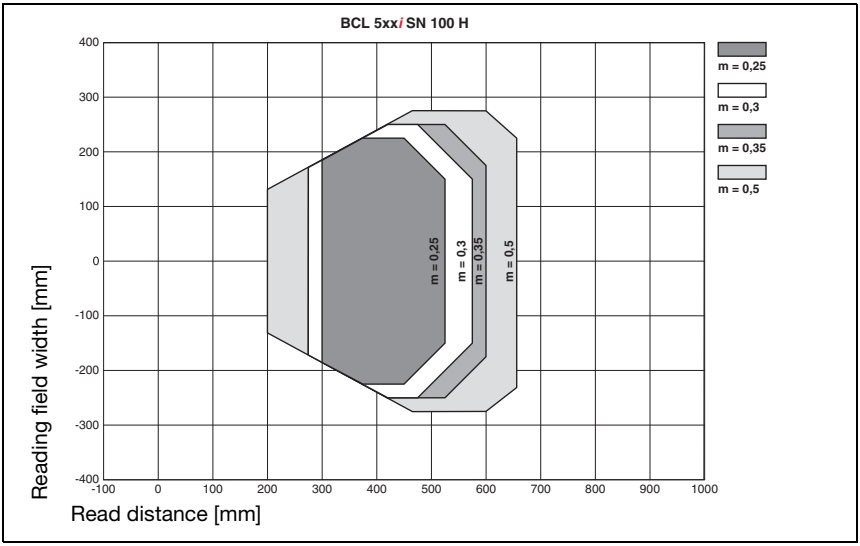

Figure 5.19: "High Density" reading field curve for line scanner with heating (with deflection mirror)

The reading field curve applies for the reading conditions stated in table 5.8.

Notice!

Please note: the BCL 558*i* line scanner with deflection mirror (perpendicular beam exit) is currently not available.

5.7.3 High Density (N) Optics: BCL 558*i* ON 100 H

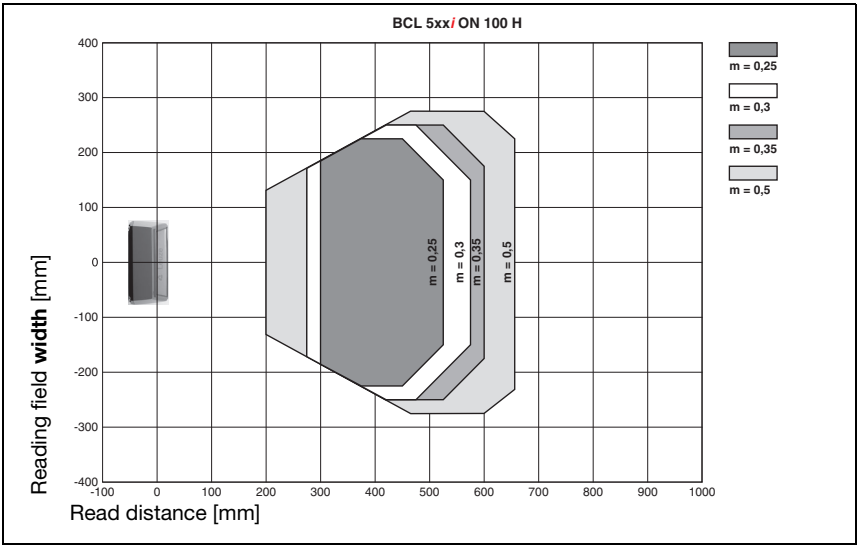

Figure 5.20: "High Density" reading field curve for oscillating-mirror scanners with heating

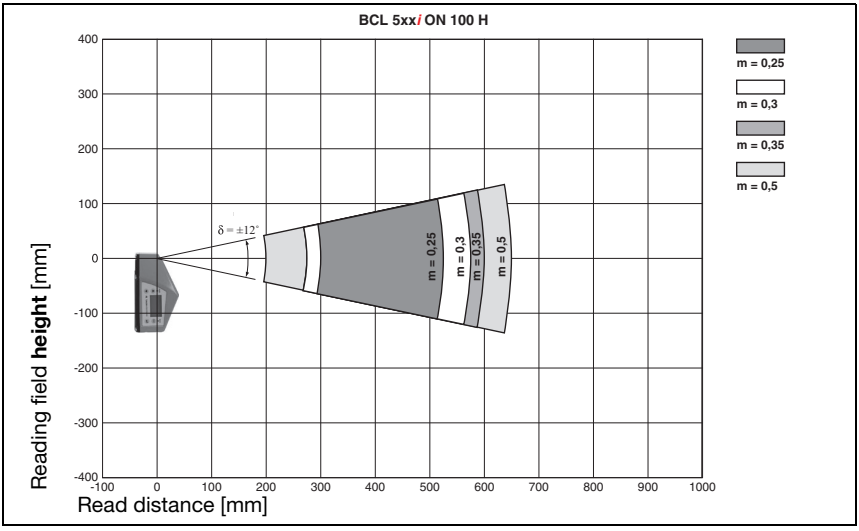

Figure 5.21: Lateral "High Density" reading field curve for oscillating-mirror scanners with heating

The reading field curves apply for the reading conditions stated in table 5.8.

5.7.4 Medium Density (M) Optics: BCL 558*i* SM 102 H

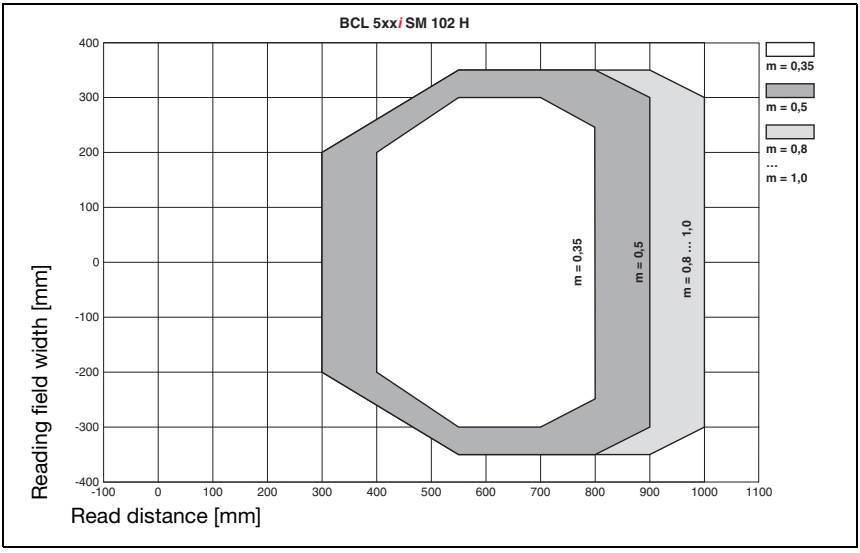

Figure 5.22: "Medium Density" reading field curve for line scanner with heating (without deflection mirror)

The reading field curves apply for the reading conditions stated in table 5.8.

5.7.5 Medium Density (M) Optics: BCL 558*i* SM 100 H

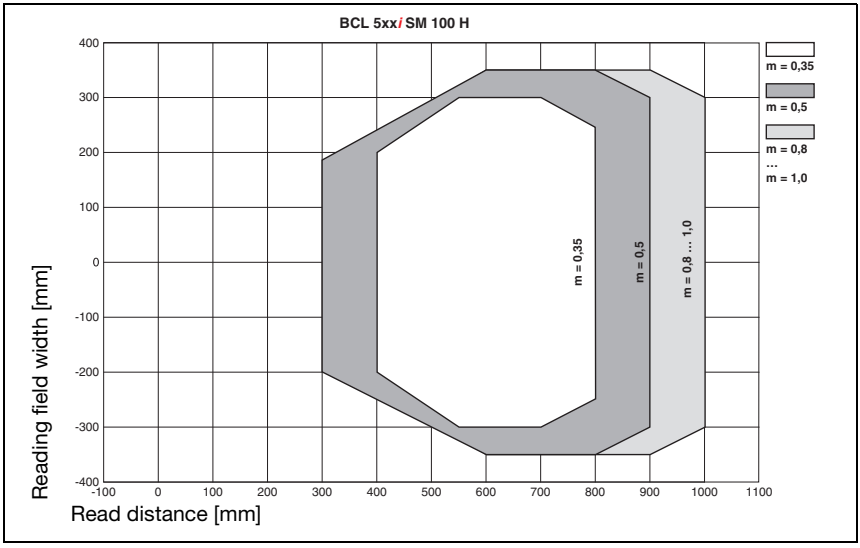

Figure 5.23: "Medium Density" reading field curve for line scanner with heating (with deflection mirror)

The reading field curves apply for the reading conditions stated in table 5.8.

Notice!

Please note: the BCL 558*i* line scanner with deflection mirror (perpendicular beam exit) is currently not available.

5.7.6 Medium Density (M) Optics: BCL 558*i* OM 100 H

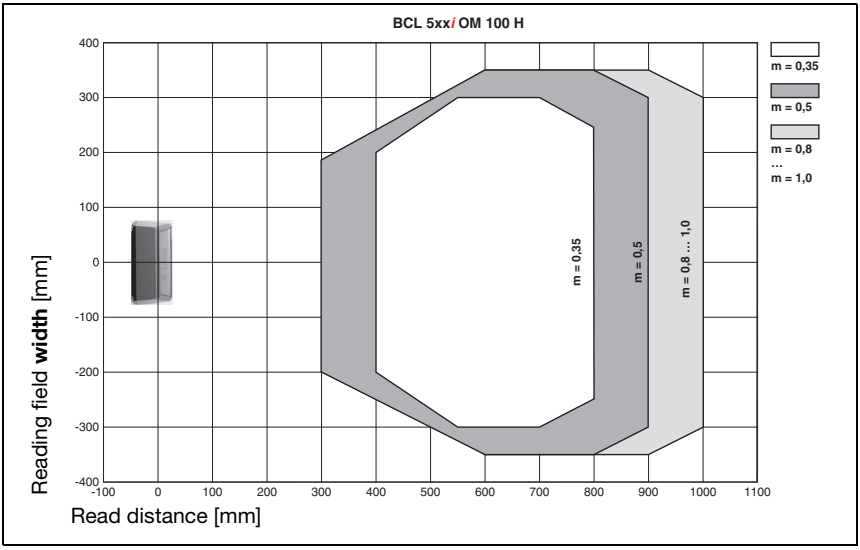

Figure 5.24: "Medium Density" reading field curve for oscillating-mirror scanners with heating

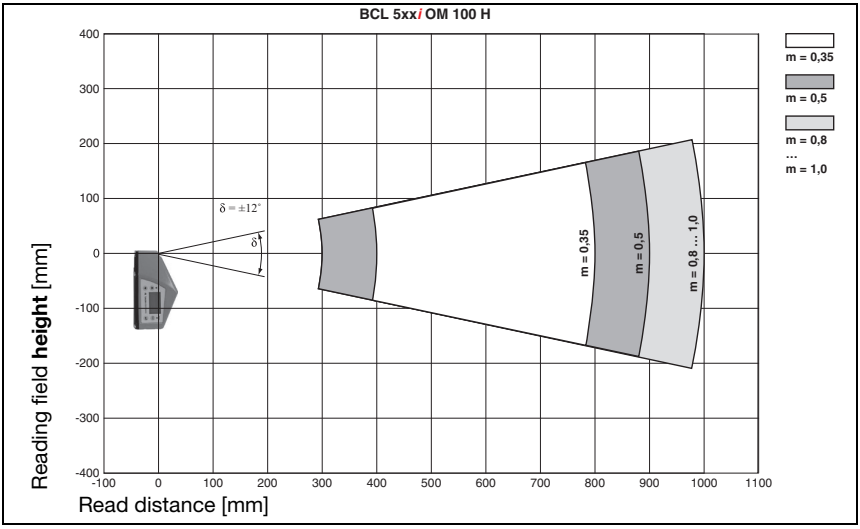

Figure 5.25: Lateral "Medium Density" reading field curve for oscillating-mirror scanners with heating

The reading field curves apply for the reading conditions stated in table 5.8.

5.7.7 Low Density (F) Optics: BCL 558*i* SF 102 H

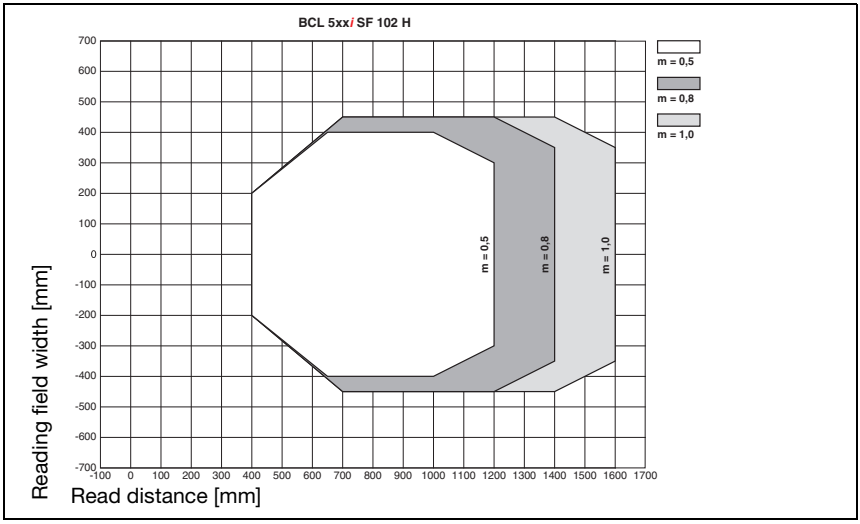

Figure 5.26: "Low Density" reading field curve for line scanner with heating (without deflection mirror)

The reading field curves apply for the reading conditions stated in table 5.8.

5.7.8 Low Density (F) Optics: BCL 558*i* SF 100 H

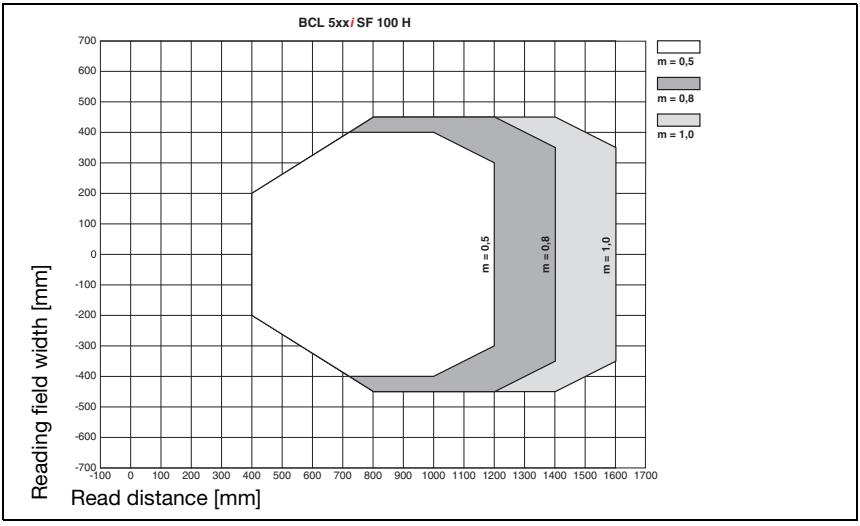

Figure 5.27: "Low Density" reading field curve for line scanner with heating (with deflection mirror)

The reading field curves apply for the reading conditions stated in table 5.8.

Notice!

Please note: the BCL 558*i* line scanner with deflection mirror (perpendicular beam exit) is currently not available.

5.7.9 Low Density (F) Optics: BCL 558*i* OF 100 H

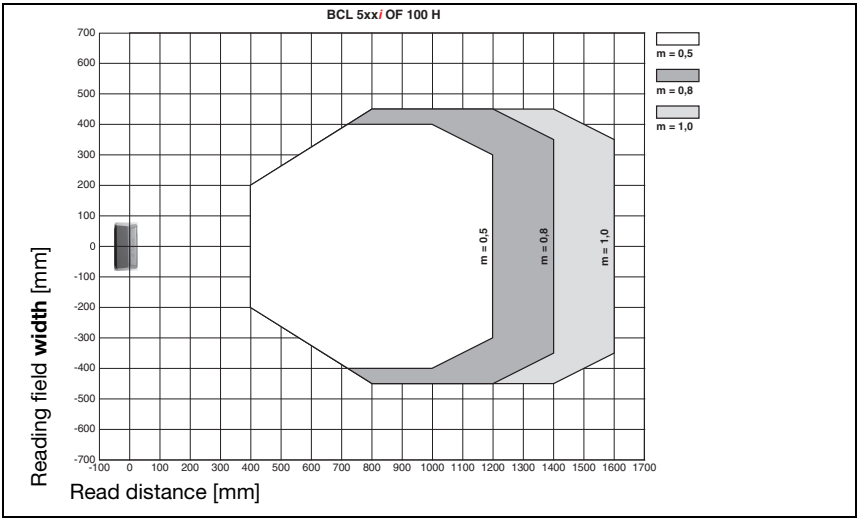

Figure 5.28: "Low Density" reading field curve for oscillating-mirror scanners with heating

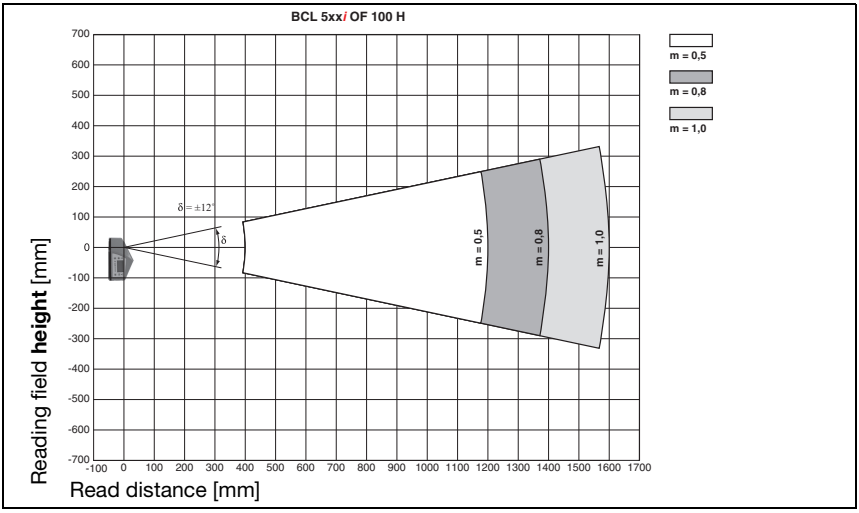

Figure 5.29: Lateral "Low Density" reading field curve for oscillating-mirror scanners with heating

The reading field curves apply for the reading conditions stated in table 5.8.

5.7.10 Ultra Low Density (L) Optics: BCL 558*i* SL 102 H

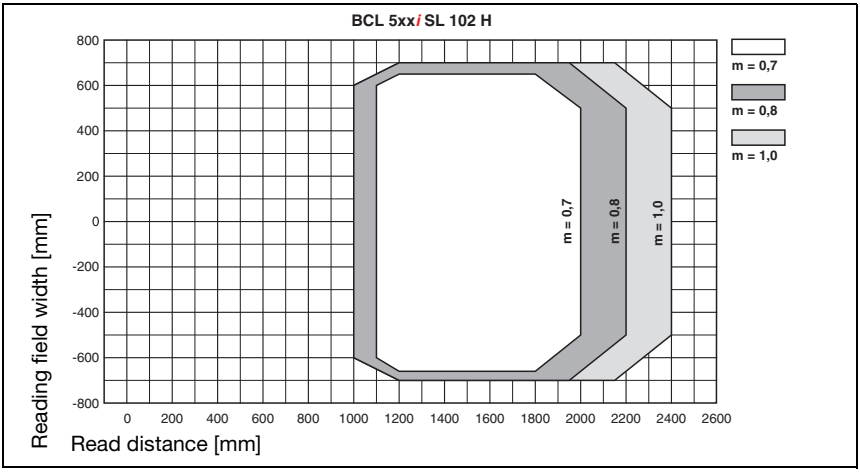

Figure 5.30: "Ultra Low Density" reading field curve for line scanner with heating (without deflection mirror)

The reading field curves apply for the reading conditions stated in table 5.8.

5.7.11 Ultra Low Density (L) Optics: BCL 558*i* OL 100 H

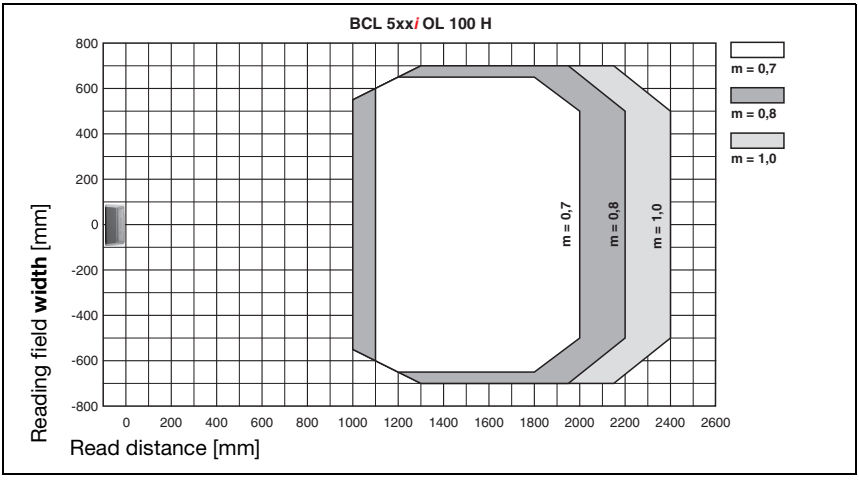

Figure 5.31: "Ultra Low Density" reading field curve for oscillating-mirror scanners with heating

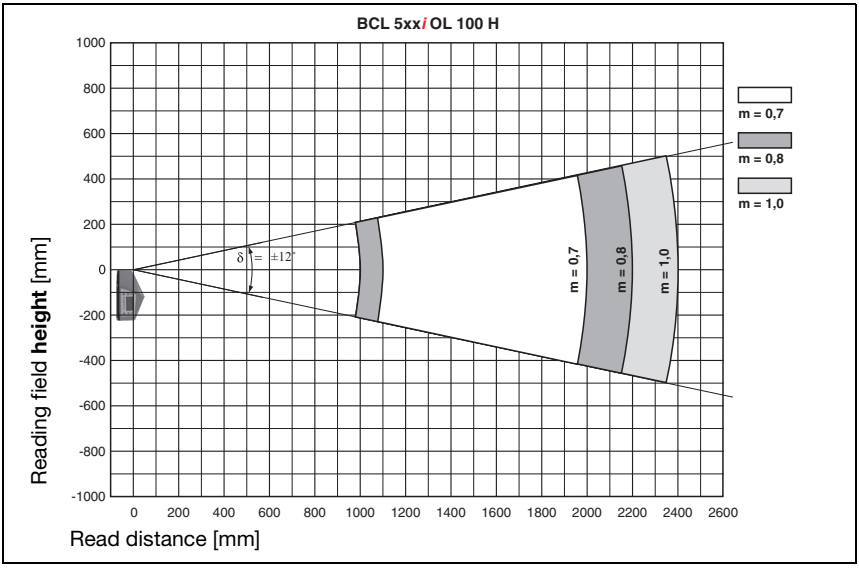

Figure 5.32: Lateral "Ultra Low Density" reading field curve for oscillating-mirror scanners with heating

The reading field curves apply for the reading conditions stated in table 5.8.

6 Installation and mounting

6.1 Storage, transportation

Attention!

When transporting or storing, package the device so that it is protected against collision and humidity. Optimum protection is achieved when using the original packaging. Heed the required environmental conditions specified in the technical data.

Unpacking

- *Check the packaging for any damage. If damage is found, notify the post office or shipping agent as well as the supplier.*
- *Check the delivery contents using your order and the delivery papers:*
  - Delivered quantity
  - Device type and model as indicated on the nameplate
  - Laser warning signs
  - Brief manual

The name plate provides information as to what BCL type your device is. For specific information, please refer to chapter 5.

Name plates of the bar code readers of the BCL 500i series

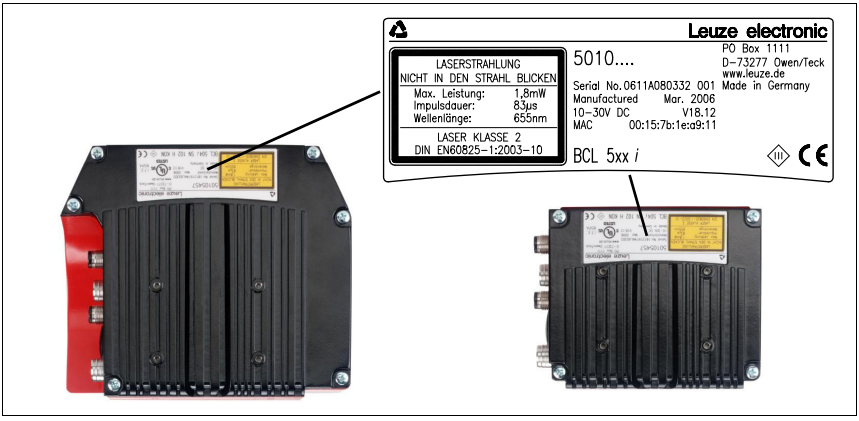

Figure 6.1: Device name plate BCL 558*i*

- *Save the original packaging for later storage or shipping.*

If you have any questions concerning your shipment, please contact your supplier or your local Leuze electronic sales office.

- *Observe the applicable local regulations when disposing of the packaging materials.*

6.2 Mounting the BCL 558*i*

The BCL 558*i* bar code readers can be mounted in two different ways:

- Using two M4x6 screws on the rear of the device or using four M4x6 screws on the bottom of the device.
- Using a BT 56 mounting device on the two fastening grooves.

6.2.1 Fastening with M4 x 6 screws

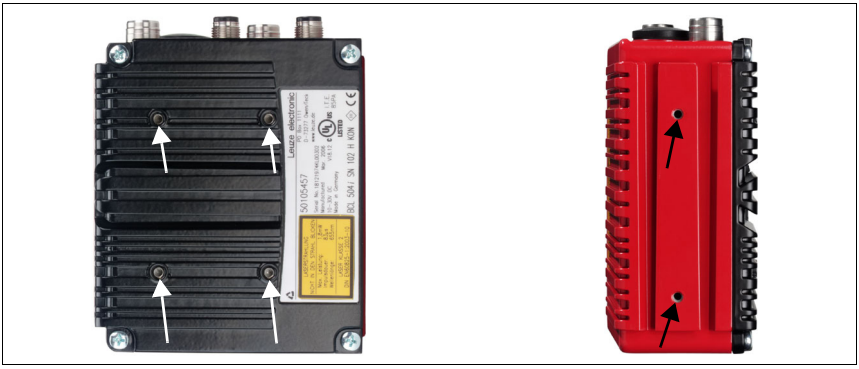

Figure 6.2: Fastening options using M4x6 threaded holes

6.2.2 BT 56 mounting device

The BT 56 mounting device is available for mounting the BCL 558*i* using the fastening grooves. It is designed for rod installation (Ø 16mm to 20mm). For ordering instructions, please refer to chapter "Type overview and accessories" on page 175.

BT 56 mounting device

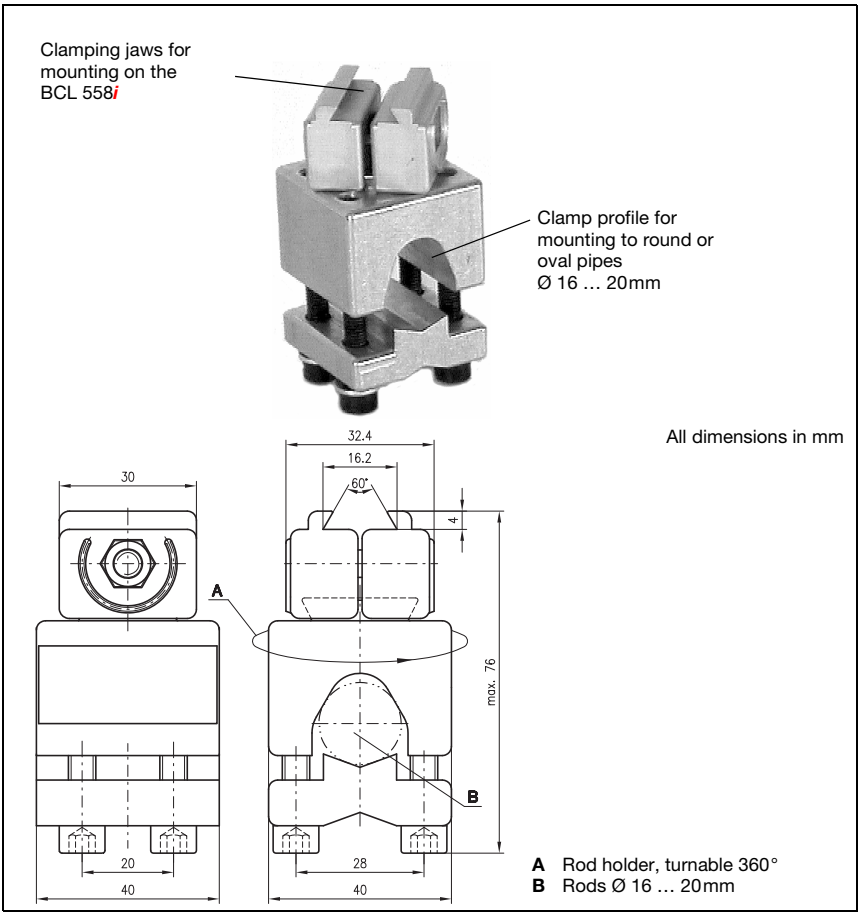

Figure 6.3: BT 56 mounting device

Figure 6.4: Mounting example of BCL 558*i* with BT 56

6.2.3 BT 59 mounting device

The BT 59 mounting device offers you an additional fastening option. For ordering instructions, please refer to chapter "Type overview and accessories" on page 175.

BT 59 mounting device

Clamping jaws for mounting on the BCL 558*i*

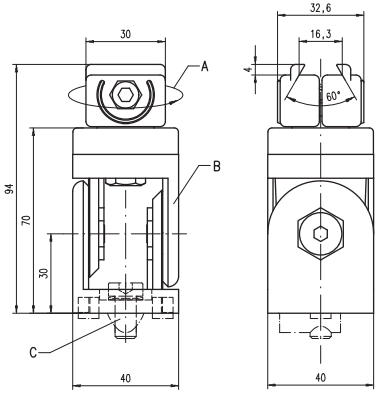

All dimensions in mm

A Holder, turnable 360°
B ITEM joint, angle adjustable ±90°
C M 8x16 screw cylinder, M 8 wave washer, M 8 sliding block, connectors for ITEM profile (2x)

Figure 6.5: BT 59 mounting device

Notice!

When mounting, ensure that the scanning beam is not reflected directly back to the scanner by the label which is being read. For further information, see the notices in chapter 6.3! Please refer to chapter 5.6 for the permissible minimum and maximum distances between the BCL 558i and the labels to be read.

6.3 Device arrangement

6.3.1 Selecting a mounting location

In order to select the right mounting location, several factors must be considered:

- Size, orientation, and position tolerance of the bar codes on the objects to be scanned.
- The reading field of the BCL 558*i* in relation to the bar code module width.
- The resulting minimum and maximum reading distance from the respective reading field (see chapter 5.5 "Reading field curves / optical data").
- The permissible cable lengths between the BCL 558*i* and the host system depending on which interface is used.
- The correct time for data output. The BCL 558*i* should be positioned in such a way that, taking into consideration the time required for data processing and the conveyor belt speed, there is sufficient time to e.g. initiate sorting operations on the basis of the read data.
- The display and control panel should be very visible and accessible.
- For configuring and commissioning with the webConfig tool, the USB interface should be easily accessible.

For specific information, please refer to chapter 4.4.

Notice!

The beam exits the BCL 558i as follows for the respective devices:
*- line scanner **parallel** to the **housing base***
*- oscillating mirror and deflection mirror **perpendicular** to the **housing base***
The black areas in figure 6.1 are the housing base. The best read results are obtained when:

- *The BCL 558i is mounted in such a way that the scanning beam is incident on the bar code at an angle of inclination greater than ±10° … 15° to vertical.*
- *The reading distance lies in the middle area of the reading field.*
- *The bar code labels are of good print quality and have good contrast ratios.*
- *You do not use high-gloss labels.*
- *There is no direct sunlight.*

6.3.2 Avoiding total reflection – Line scanner

The bar code label must be positioned at an angle of inclination greater than ±10° … 15° from vertical in order to avoid total reflection of the laser beam (see figure 6.6)!

Total reflection occurs whenever the laser light of the bar code reader is directly incident on the surface of the bar code at an angle of 90°. The light directly reflected by the bar code may overload the bar code reader and thereby cause non-readings!

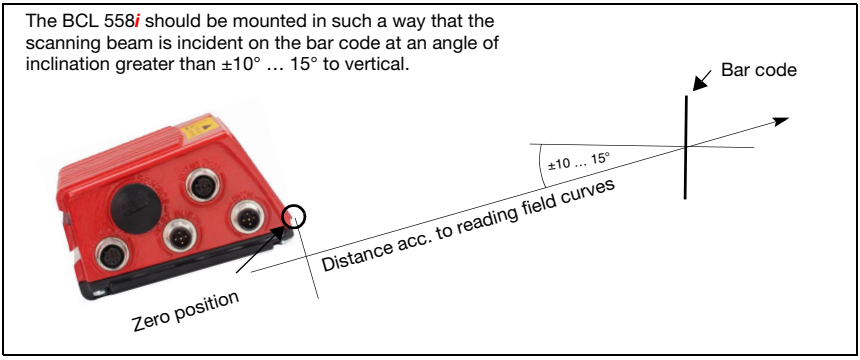

Figure 6.6: Total reflection – line scanner

6.3.3 Avoiding total reflection – oscillating/deflection-mirror scanner

For the BCL 558*i* with **oscillating/deflection mirror**, the laser beam exits at an angle of **90° to vertical**.

For the BCL 558*i* with **deflection mirror**, it is also possible to **use software to adjust the direction of the beam by ±10°**.

For the BCL 558*i* with **oscillating mirror**, the **swivel range of ±20°** (±12° for devices with heating) **is to be taken into account**.

This means that in order to be on the safe side and to avoid total reflection, the BCL 558*i* with oscillating/deflection mirror must be inclined upward or downward 20° … 30°!

Notice!

Mount the BCL 558i with oscillating/deflection mirror in such a way that the outlet window of the bar code reader is parallel to the object. This will result in an angle of inclination of approx. 25°.

Notice!

Please note: the BCL 558i line scanner with deflection mirror (perpendicular beam exit) is currently not available.

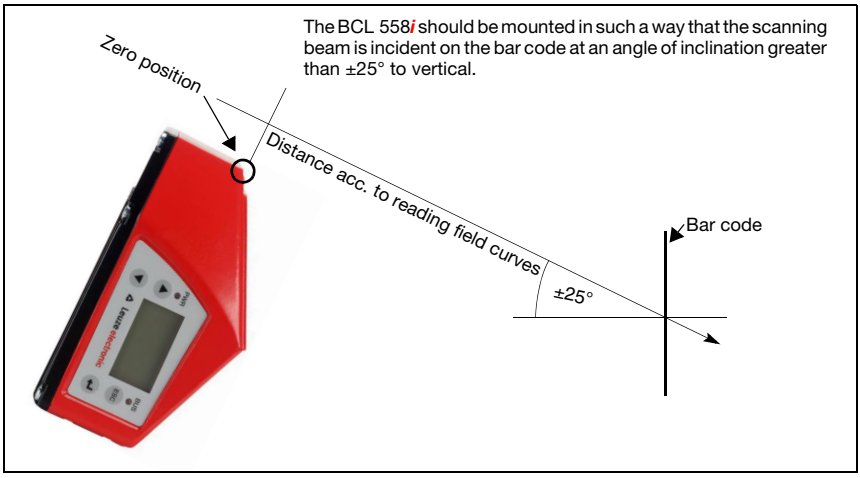

Figure 6.7: Total reflection – BCL 558*i* with oscillating/deflection mirror

6.3.4 Mounting location

When selecting a mounting location, pay attention to:

- *Maintaining the required environmental conditions (temperature, humidity).*
- *Possible soiling of the reading window due to liquids, abrasion by boxes, or packaging material residues.*
- *Lowest possible chance of damage to the BCL 558i by mechanical collision or jammed parts.*
- *Possible extraneous light (no direct sunlight or sunlight reflected by the bar code).*

6.3.5 Devices with integrated heating

For devices with integrated heating, also observe the following points:

- Mount the BCL 558*i* in a way which provides maximum thermal isolation, e.g. using rubber-bonded metal.
- Mount in such a way that the device is protected from draft and wind; mount additional shields if necessary.

Notice!

When installing the BCL 558i in a protective housing, it must be ensured that the scanning beam can exit the protective housing without obstruction.

6.3.6 Possible read angles between BCL 558*i* and bar code

The optimum alignment of the BCL 558*i* is accomplished when the scan line scans the code bars almost at a right angle (90°). All read angles that are possible between the scan line and bar code must be taken account (figure 6.8).

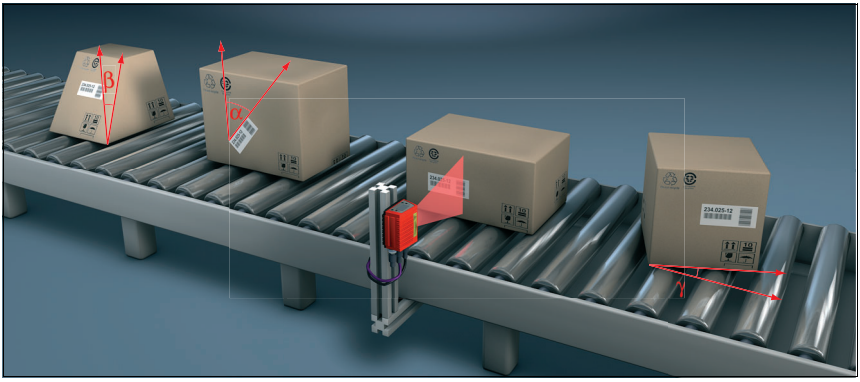

Figure 6.8: Reading angle for the line scanner

α Tilt

β Angle of inclination (Pitch)

γ Skew

In order to avoid total reflection, the skew γ should be greater than 10°

6.4 Attaching laser warning sign

Attention Laser!

Follow the safety notices in chapter 2.

↳ *It is important that you attach the sticky labels supplied to the device (laser warning signs and laser emission symbol)! If the signs would be covered due to the installation situation of the BCL 558i, attach them instead in the immediate vicinity of the BCL 558i in such a way that it is not necessary to look into the laser beam when reading the notices!*

6.5 Cleaning

↳ *Clean the glass window of the BCL 558i with a soft cloth after mounting. Remove all packaging remains, e.g. carton fibers or Styrofoam balls. In doing so, avoid leaving fingerprints on the front cover of the BCL 558i.*

Attention!

Do not use aggressive cleaning agents such as thinner or acetone for cleaning the device.

7 Electrical connection

The bar code readers of the BCL 500*i* series are connected using variously coded M12 connectors. This ensures unique connection assignments.

The additional USB interface is used for configuring the device.

For the locations of the individual device connections, please refer to the device detail shown below.

Notice!

The corresponding mating connectors and ready-made cables are available as accessories for all connections. For additional information, refer to chapter chapter 13.

Figure 7.1: Location of the electrical connections

7.1 Safety notices for the electrical connection

Attention!

Do not open the device yourself under any circumstances! There is otherwise a risk of uncontrolled emission of laser radiation from the device. The housing of the BCL 558i contains no parts that need to be adjusted or maintained by the user.

Before connecting the device, be sure that the supply voltage agrees with the value printed on the name plate.

Connection of the device and cleaning must only be carried out by a qualified electrician.

Ensure that the functional earth (FE) is connected correctly. Unimpaired operation is only guaranteed when the functional earth is connected properly.

If faults cannot be corrected, the device should be removed from operation and protected against possible use.

Attention!

For UL applications, use is permitted exclusively in Class 2 circuits according to NEC (National Electric Code).

The bar code readers of the BCL 500i series are designed in accordance with safety class III for supply by PELV (protective extra-low voltage with reliable disconnection).

Notice!

Protection class IP 65 is achieved only if the connectors and caps are screwed into place!

7.2 Electrical connection of the BCL 558*i*

As a network participant, the BCL 558*i* is equipped with four M12 plugs / sockets which are A- and D-coded.

The voltage supply (**PWR**) as well as the four freely configurable switching inputs/outputs (**SW IN/OUT** and **PWR**) are connected there.

"**HOST / BUS IN**" is available as an Ethernet interface for connecting to the host system.

By means of the implemented switch function in the BCL 558*i*, an additional second "**BUS OUT**" Ethernet interface is available for creating a scanner network (linear topology).

A USB connection serves as a "SERVICE" interface.

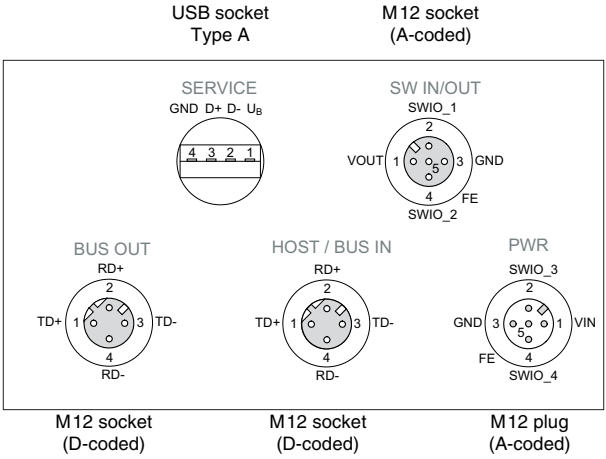

Figure 7.2: Connections of the BCL 558*i*

Described in detail in the following are the individual connections and pin assignments.

7.2.1 PWR – Voltage supply and switching input/outputs 3 and 4

PWR (5-pin plug, A-coded)			
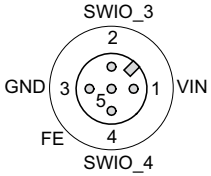 **M12 plug (A-coded)**	**Pin**	**Name**	**Remark**
	1	VIN	Positive supply voltage +10 … +30 V DC
	2	SWIO_3	Configurable switching input / output 3
	3	GND	Negative supply voltage 0 V DC
	4	SWIO_4	Configurable switching input / output 4
	5	FE	Functional earth
	Thread	FE	Functional earth (housing)

Table 7.1: Pin assignment PWR

Supply voltage

Attention!

For UL applications, use is permitted exclusively in Class 2 circuits according to NEC (National Electric Code).

The bar code readers of the BCL 500i … series are designed in accordance with safety class III for supply by PELV (protective extra-low voltage with reliable disconnection).

Connecting functional earth FE

↳ *Ensure that the functional earth (FE) is connected correctly. Unimpaired operation is only guaranteed when the functional earth is connected properly. All electrical disturbances (EMC couplings) are discharged via the functional earth connection.*

Switching input/output

The bar code readers of the BCL 500*i* series are equipped with four freely programmable, opto-decoupled switching inputs and outputs **SWIO_1 … SWIO_4**.

The switching inputs can be used to activate various internal functions of the BCL 558*i* (decoding, autoConfig, …). The switching outputs can be used to signal the state of the BCL 558*i* and to implement external functions independent of the superior control.

The two switching inputs/outputs **SWIO_1** and **SWIO_2** are located on the **SW IN/OUT** M12 socket and are described in chapter 7.2.3. The other two (**SWIO_3** and **SWIO_4**) of the four freely configurable switching inputs/outputs are located on the **PWR** M12 connector.

Notice!

The respective function as input or output can be set via the display or with the aid of the webConfig tool!

Described in the following is the external wiring for use as a switching input or output; the respective function assignments to the switching inputs/outputs can be found in chapter 10.

Function as switching input

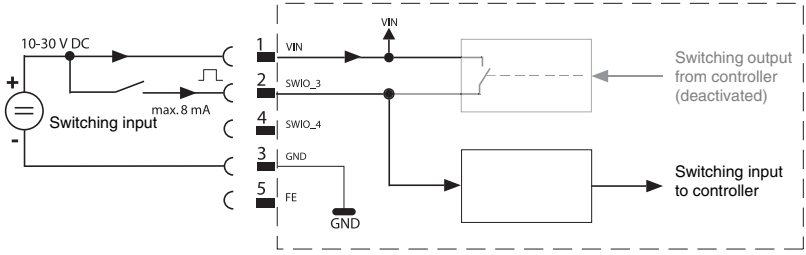

Figure 7.3: Switching input connection diagram SWIO_3 and SWIO_4

↳ *If you use a sensor with a standard M12 connector, please note the following:*

- Pins 2 and 4 must not be operated as switching outputs if sensors which function as inputs are also connected to these pins.

If, for example, the inverted sensor output is connected to pin 2, and pin 2 of the bar code reader is, at the same time, configured as an output (and not as an input), the switching output malfunctions.

Attention!

The maximum input current must not exceed 8mA!

Function as switching output

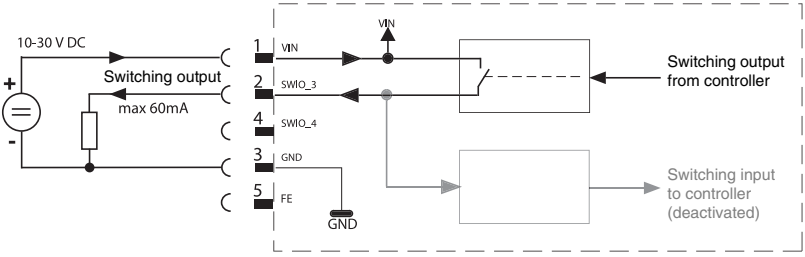

Figure 7.4: Switching output connection diagram SWIO_3 / SWIO_4

Attention!

Each configured switching output is short-circuit proof! Do not load the respective switching output of the BCL 558i with more than 60mA at +10 … +30VDC in normal operation!

Notice!

Both switching inputs/outputs SWIO_3 and SWIO_4 are configured by default in such a way that:

- Switching input SWIO_3 activates the reading gate.
- Switching output SWIO_4 switches by default on "No Read".

7.2.2 SERVICE – USB interface (type A)

SERVICE – USB interface (type A)			
SERVICE GND D+ D- U_B 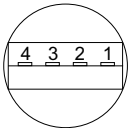 	**Pin**	**Name**	**Remark**
	1	VB	Positive supply voltage +5VDC
	2	D-	Data -
	3	D+	Data +
	4	GND	Ground

Table 7.2: Pin assignments of SERVICE – USB interface

Attention!

Maximum load of the +5VDC supply voltage of the Service - USB interface is 200mA!

↳ *Ensure adequate shielding.*

The entire connection cable must absolutely be shielded acc. to the USB specifications. Cable length must not exceed 3m.

↳ *Use the Leuze specific **USB service cable** (see chapter 13 "Type overview and accessories") for the connection and use a service PC to configure.*

Notice!

IP 65 is achieved only if the connectors and caps are screwed into place. Alternatively, a parameter memory in the form of a USB memory stick certified by Leuze electronic GmbH + Co. can be connected to the provided USB service interface. With this Leuze memory stick, protection class IP 65 is also ensured. For further information, please refer to chapter 4.7 and chapter 10.10.2 of this documentation!

7.2.3 SW IN/OUT – Switching input/switching output

SW IN/OUT (5-pin socket, A-coded)			
SW IN/OUT SWIO_1 2 VOUT 1 5 3 GND 4 FE SWIO_2 **M12 socket (A-coded)**	**Pin**	**Name**	**Remark**
	1	VOUT	Voltage supply for sensors (VOUT identical to VIN at PWR IN)
	2	SWIO_1	Configurable switching input / output 1
	3	GND	GND for the sensors
	4	SWIO_2	Configurable switching input / output 2
	5	FE	Functional earth
	Thread	FE	Functional earth (housing)

Table 7.3: Pin assignment SW IN/OUT

The bar code readers of the BCL 500*i* series are equipped with four freely programmable, opto-decoupled switching inputs and outputs **SWIO_1 … SWIO_4**.

The two switching inputs/outputs **SWIO_1** and **SWIO_2** are located on the **SW IN/OUT** M12 socket. The other two (**SWIO_3** and **SWIO_4**) of the four freely configurable switching inputs/outputs are located on the **PWR** M12 connector and are described in chapter 7.2.1.

Described in the following is the external wiring for use as a switching input or output; the respective function assignments to the switching inputs/outputs can be found in chapter 10.

Function as switching input

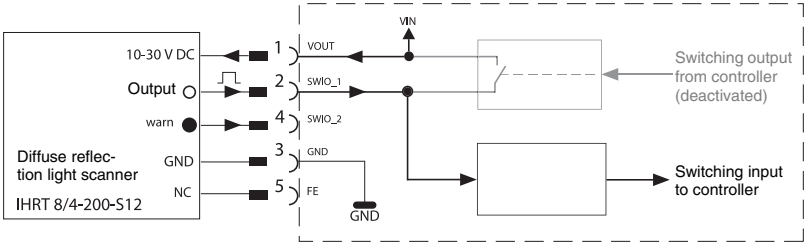

Figure 7.5: Switching input connection diagram SWIO_1 and SWIO_2

If you use a sensor with a standard M12 connector, please note the following:

- Pins 2 and 4 must not be operated as switching outputs if sensors which function as inputs are also connected to these pins.

If, for example, the inverted sensor output is connected to pin 2, and pin 2 of the bar code reader is, at the same time, configured as an output (and not as an input), the switching output malfunctions.

Attention!

The maximum input current must not exceed 8mA!

Function as switching output

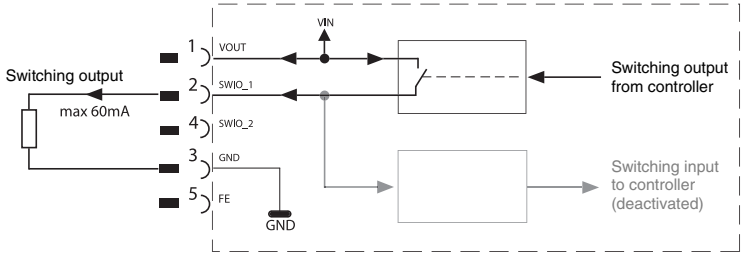

Figure 7.6: Switching output connection diagram SWIO_1 / SWIO_2

Attention!

Each configured switching output is short-circuit proof! Do not load the respective switching output of the BCL 558i with more than 60mA at +10 … +30VDC in normal operation!

Notice!

*Both switching inputs/outputs SWIO_1 and SWIO_2 are configured by default in such a way that they function as **switching inputs**:*

- Switching input **SWIO_1** activates the **start reading gate** function
- Switching input **SWIO_2** activates the **reference code teach-in** function

The functions of the individual switching inputs/outputs are programmed via the display or via configuration in the webConfig tool under the Switching input or Switching output heading.

For further information, see also "Commissioning and configuration" on page 110.

7.2.4 HOST / BUS IN for BCL 558*i*

The BCL 558*i* makes either the Ethernet interface available as host interface.

HOST / BUS IN (4-pin socket, D-coded)			
HOST / BUS IN 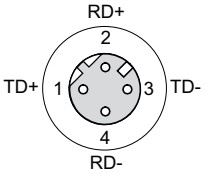 **M12 socket (D-coded)**	**Pin**	**Name**	**Remark**
	1	TD+	Transmit Data +
	2	RD+	Receive Data +
	3	TD-	Transmit Data -
	4	RD-	Receive Data -
	Thread	FE	Functional earth (housing)

Table 7.4: Pin assignment HOST / BUS IN BCL 558*i*

For the host connection of the BCL 558i, the "KB ET - … - SA-RJ45" ready-made cables are preferred, see table 13.9 "Bus connection cables for the BCL 558i" on page 180.

Ethernet cable assignments

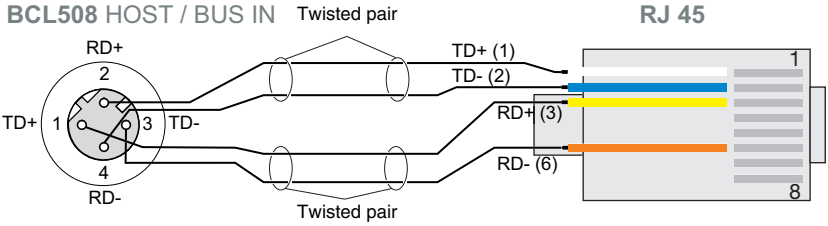

Figure 7.7: HOST / BUS IN cable assignments on RJ-45

Notice for connecting the Ethernet interface!

Ensure adequate shielding. The entire connection cable must be shielded and earthed. The RD+/RD- and TD+/TD- wires must be stranded in pairs.
Use CAT 5 cable for the connection.

7.2.5 BUS OUT for the BCL 558*i*

To set up an Ethernet network with other participants with linear topology, the BCL 558*i* makes available another Ethernet interface. The use of this interface drastically reduces the cabling requirements, as only the first BCL 558*i* requires a direct connection to the switch, via which it can communicate with the host. All other BCL 558*i* are connected in series to the first BCL 558*i*, see figure 7.9.

BUS OUT (4-pin socket, D-coded)			
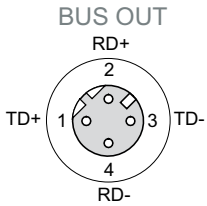	**Pin**	**Name**	**Remark**
	1	TD+	Transmit Data +
	2	RD+	Receive Data +
	3	TD-	Transmit Data -
	4	RD-	Receive Data -
	Thread	FE	Functional earth (housing)

Table 7.5: Pin assignment BUS OUT

↳ *For the connection of two BCL 558i, the "KB ET - … - SSA" ready-made cables are preferred, see table 13.9 "Bus connection cables for the BCL 558i" on page 180.*

If you use user-configurable cables, note the following:

Notice!

Ensure adequate shielding. The entire connection cable must be shielded and earthed. The signal lines must be stranded in pairs.
Use CAT 5 cable for the connection.

Notice!

For the BCL 558i as standalone device or as the last participant in a linear topology, termination on the BUS OUT socket is not mandatory!

7.3 Ethernet topologies

The BCL 558*i* can be operated as a single device (stand-alone) in an Ethernet star topology with individual IP address.

The IP address can either be set permanently via the display or webConfig tool or assigned dynamically via a DHCP server.

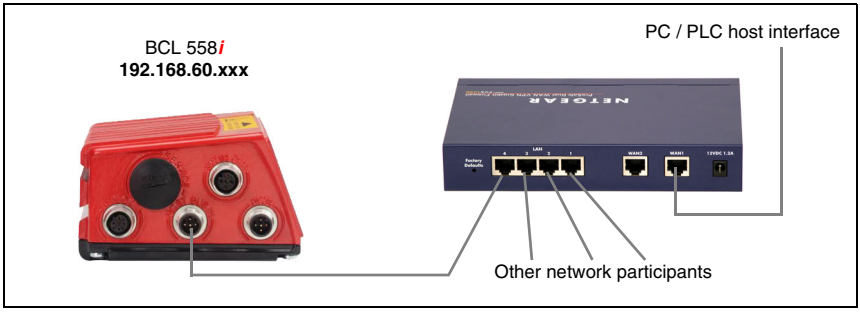

Figure 7.8: Ethernet with star topology

The innovative further development of the BCL 558*i* with integrated switch functionality offers the option of networking multiple bar code readers of type BCL 558*i* with one another. In addition to the classic "star topology", a "linear topology" is thus also possible.

This makes wiring the network easy and inexpensive as slaves are looped through to one another in parallel.

The maximum length of a segment (connection from the hub to the last participant) is limited to 100 m.

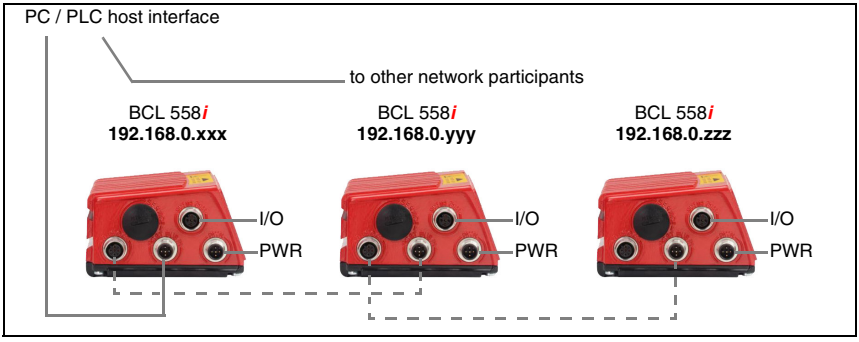

Figure 7.9: Ethernet with linear topology

Up to 254 bar code readers can be networked. For this purpose, each participating BCL 558*i* is assigned the respective network address via the display and the control panel or the webConfig tool. This address must be specified by the network administrator. Alternatively, the BCL 558*i* can also be configured as a DHCP client and then automatically receive its address from a DHCP server.

Information on the necessary configuration steps can be found in chapter 10.

7.3.1 Ethernet wiring

A Cat. 5 Ethernet cable should be used for wiring.

For the connection on the BCL 558*i*, a "KDS ET M12 / RJ 45 W - 4P" adapter is available into which the standard network cable can be plugged.

If no standard network cables are to be used (e.g. due to lacking IP… protection class), you can use the "KB ET - … - SA" user-configurable cable on the BCL 558*i*, see table 13.9 "Bus connection cables for the BCL 558i" on page 180.

The individual BCL 558*i* devices in a linear topology are connected with the "KB ET - … - SSA" cable, see table 13.9 "Bus connection cables for the BCL 558i" on page 180.

For unavailable line lengths, you can configure your cables yourself. When doing so, make certain that you connect **TD+** on the M12 connector with **RD+** on the RJ-45 connector and **TD-** on the M12 connector with **RD-** on the RJ-45 connector, respectively, etc.

Notice!

Use the recommended connectors / sockets or the ready-made cables (see chapter 13 "Type overview and accessories").

7.4 Cable lengths and shielding

↳ *Observe the following maximum cable lengths and shielding types:*

Connection	Interface	Max. cable length	Shielding
BCL – service	USB	3m	shielding absolutely necessary acc. to USB specifications
BCL – host	Ethernet	100m	absolutely required, shielded
Network from the first BCL to the last BCL	Ethernet	The max. segment length must not exceed 100m for 10Base-T twisted pairs (min. Cat. 3) and 100Base-TX twisted pair (min. Cat. 5)	absolutely required, shielded
BCL – power supply unit		30m	not necessary
Switching input		10m	not necessary
Switching output		10m	not necessary

Table 7.6: Cable lengths and shielding

8 Display and control panel

8.1 Structure of the control panel

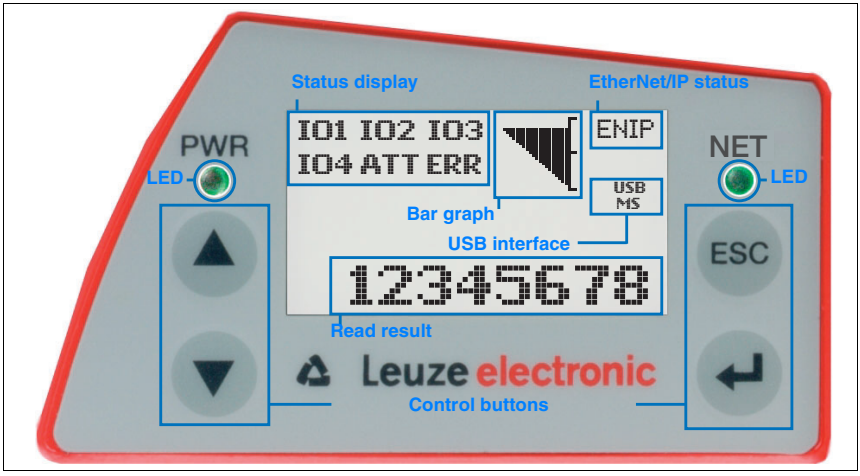

Figure 8.1: Structure of the control panel

8.2 Status display and operation

8.2.1 Indicators in the display

Status displays of the switching inputs/outputs

IO1 Switching input or switching output 1 active (function dependent on set configuration).
Default: Switching input with the "Reading gate activation" function

IO2 Switching input or switching output 2 active (function dependent on set configuration).
Default: Input with the "Teach-in" function

IO3 Switching input or switching output 3 active (function dependent on set configuration).
Default: Switching input with the "Reading gate activation" function

IO4 Switching input or switching output 4 active (function dependent on set configuration).
Default: Switching output with the "No read" function

ATT Warning (Attention)

ERR Internal device error (Error) -> The device must be sent in for inspection

Bar graph

The read quality is described on a scale of 0 - 100%. The quality is evaluated based on the "Equal Scans" of the read result configured in the bar code reader.

Status display of the USB interface

USB The BCL 558*i* is connected to a PC via the USB interface.

MS An external parameter memory is properly connected to the USB interface of the BCL 558*i*.

Read result

The read bar code information is displayed.

EtherNet/IP status

ENIP EtherNet/IP interface is activated.

8.2.2 LED status indicators

PWR LED

PWR	**off**	**Device OFF** - no supply voltage
PWR	**flashes green**	**Device ok, initialization phase** - no bar code reading possible - voltage connected - self test running - initialization running
PWR	**green continuous light**	**Device ok** - bar code reading possible - self test successfully finished - device monitoring active
PWR	**orange continuous light**	**Service mode** - bar code reading possible - configuration via the USB service interface - configuration via the display - no data on the host interface
PWR	**flashes red**	**Device ok, warning set** - bar code reading possible - temporary operating fault
PWR	**red continuous light**	**Device error / parameter enable** - no bar code reading possible

NET LED

NET	**off**	**No supply voltage** - no communication possible - no IP address assigned
NET	**flashes green**	**Initialization** - self test running - no EtherNet/IP communication present - BCL 558*i* is not assigned to any master
NET	**green continuous light**	**Operation ok** - BCL 558*i* bus communication ok
NET	**flashes red**	**Communication error** - self test running - time-out in bus communication
NET	**red continuous light**	**Network error** - double IP address
NET	**green/red flashing**	**Self test** - self test running

8.2.3 Control buttons

▲	**Up**	**Navigate upward/laterally.**
▼	**Down**	**Navigate downward/laterally.**
ESC	**ESC**	**Exit menu item.**
↵	**ENTER**	**Confirm/enter value, change menu levels.**

Navigating within the menus

The menus within a level are selected with the up/down buttons ▲ ▼.
The selected menu item is activated with the enter button ↵.
Press the ESC button ESC to move up one menu level.
When one of the buttons is actuated, the display illumination is activated for 10 min.

Setting values

If input of a value is possible, the display looks like this:

```
0000|
   <-|0123456789  save
Standard ----- Unit
  0000  |    |
```

Use the ▲▼ and ↵ buttons to set the desired value. An accidental, incorrect entry can be corrected by selecting <-| and then pressing ↵.

Then use the ▲▼ buttons to select save and save the set value by pressing ↵.

Selecting options

If options can be selected, the display looks like this:

```
o OFF
  ON
Standard ----- Unit
   OFF  |    |
```

Select the desired option with the ▲▼ buttons. Activate the option by pressing ↵.

8.3 Menu description

After voltage is applied to the bar code reader, a startup screen is displayed for several seconds. The display then shows the bar code reading window with all status information.

8.3.1 The main menus

Device information - main menu

This menu item contains detailed information on

- Device type
- Software version
- Hardware version
- Serial number

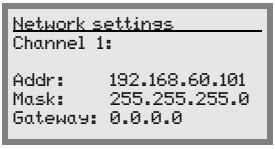

Network settings - main menu

- Display of the network settings

See "EtherNet/IP" on page 99.

Bar code reading window - main menu

- Visualization of the read bar code information
- Status overview of the switching inputs/outputs
- Bar graphs for read quality of the current bar code

See "Indicators in the display" on page 86.

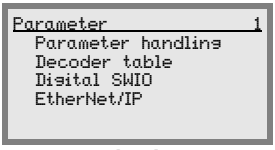

Parameter - main menu

- Configuration of the bar code reader

See "Parameter menu" on page 92.

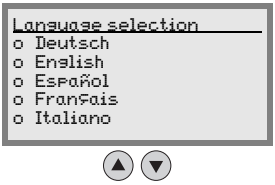

Language selection - main menu

- Selection of the display language

See "Language selection menu" on page 100.

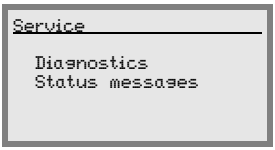

Service - main menu

- Scanner diagnosis and status messages

See "Service menu" on page 100.

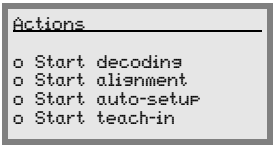

Actions - main menu

- Various functions for scanner configuration and manual operation

See "Actions menu" on page 101.

Notice!

The rear cover *of this manual includes a* ***fold-out page*** *with the complete* ***menu structure****.*
It describes the menu items in brief.
The display offers only limited configuration options. The configurable parameters are described here in chapter 8.3.
Only the webConfig tool provides complete configuration options and is largely self-explanatory. The use of the webConfig tool is described inchapter 9. Notes on commissioning via the webConfig tool can be found in chapter 10.

ПРОМЭЛЕКТРОНИКА / sales@prom-elec.com

8.3.2 Parameter menu

Parameter handling

The Parameter handling submenu is used to lock and release the parameter input via the display and for resetting to default values.

Level 3	Level 4	Level 5	Selection/configuration option ***Description***	Standard
Parameter enabling			OFF/ON *The standard setting (OFF) prevents unintended parameter changes.* *If parameter enabling is activated (ON), parameters can be changed manually.*	OFF
Parameters to default			*By pressing the enter button ↵ after selecting Parameters to default, all parameters are reset to their standard settings without any further security prompts.* *In this case, English is selected as the display language.*	

Table 8.1: Parameter handling submenu

Decoder table

In the `Decoder table` submenu, 4 different code type definitions can be stored. Bar codes that have been read can only be decoded if they correspond to one of the definitions stored here.

Level 3	Level 4	Level 5	Selection/configuration option *Description*	Standard
Max. no. of labels			Value between 0 and 64 *The value set here specifies the maximum number of labels that should be detected for each reading gate.*	1
Decoder 1	Symbology (Code type)		No code Code 2 of 5 interleaved Code 39 Code 32 Code UPC Code EAN Code 128 EAN Addendum Codabar Code 93 GS1 DataBar Omnidirectional GS1 DataBar Limited GS1 DataBar Expanded *If `No code` is configured, the current and all subsequent decoders are deactivated.*	Code 2/5i
	Number of digits	Interval mode	OFF/ON *With the `ON` setting, the values in digits 1 and 2 define a range of character numbers that are to be read.*	OFF
		Digits 1	0 to 64 characters *First decodable number of characters or lower range limit.*	10
		Digits 2	0 to 64 characters *Second decodable number of characters or upper range limit.*	0
		Digits 3	0 to 64 characters *Third decodable number of characters.*	0
		Digits 4	0 to 64 characters *Fourth decodable number of characters.*	0
		Digits 5	0 to 64 characters *Fifth decodable number of characters.*	0
	Reading reliability		Value from 2 to 100 *Number or scans required to reliably detect a label.*	4

Table 8.2: Decoder table submenu

Level 3	Level 4	Level 5	Selection/configuration option ***Description***	Standard
	Check digit method		Standard No check *Depending on the symbology (code type) selected for the decoder, further calculation algorithms can be selected here.* *Check digit method used for the decoding of the bar code that has been read.* *If Standard is set, the check digit method intended for the respective code type is used.*	Standard
	Check digit transm.		Standard Not standard *Specifies whether the check digit is transmitted. Standard means that the transmission matches the standard intended for the respective code type.*	Standard
Decoder 2	Symbology		*as decoder 1*	Code 39
	Number of digits	Interval mode	OFF/ON	ON
		Digits 1	0 to 64 characters	4
		Digits 2	0 to 64 characters	30
		Digits 3	0 to 64 characters	0
		Digits 4	0 to 64 characters	0
		Digits 5	0 to 64 characters	0
	Reading reliability		Value from 2 to 100	4
	Check digit method		*as decoder 1*	Standard
	Check digit transm.		*as decoder 1*	Standard
Decoder 3	Symbology		*as decoder 1*	Code 128
	Number of digits	Interval mode	OFF/ON	ON
		Digits 1	0 to 64 characters	4
		Digits 2	0 to 64 characters	63
		Digits 3	0 to 64 characters	0
		Digits 4	0 to 64 characters	0
		Digits 5	0 to 64 characters	0
	Reading reliability		Value from 2 to 100	4
	Check digit method		*as decoder 1*	Standard
	Check digit transm.		*as decoder 1*	Standard

Table 8.2: Decoder table submenu

Level 3	Level 4	Level 5	Selection/configuration option *Description*	Standard
Decoder 4	Symbology		*as decoder 1*	Code UPC
	Number of digits	Interval mode	OFF/ON	OFF
		Digits 1	0 to 64 characters	8
		Digits 2	0 to 64 characters	0
		Digits 3	0 to 64 characters	0
		Digits 4	0 to 64 characters	0
		Digits 5	0 to 64 characters	0
	Reading reliability		Value from 2 to 100	4
	Check digit method		*as decoder 1*	Standard
	Check digit transm.		*as decoder 1*	Standard

Table 8.2: Decoder table submenu

Digital SWIO

The Digital SWIO submenu is used to configure the 4 switching inputs/outputs of the BCL 558*i*.

Level 3	Level 4	Level 5	Selection/configuration option *Description*	Standard
Sw. input/ output 1	I/O mode		Input / Output / Passive *Determines the function of switching input/output 1.* *In the case of passive, the connection is on 0V if the Inverted parameter is set to OFF, and on +UB if the Inverted parameter is set to ON.*	Input
	Switching input	Inverted	OFF / ON *OFF = activation of the switching input function upon high level at the switching input* *ON = activation of the switching input function upon low level at the switching input.*	OFF
		Debounce time	Value from 0 to 1000 *Time in milliseconds for which the input signal must be present and stable.*	5
		Start-up delay	Value from 0 to 65535 *Time in milliseconds between the end of the debounce time and activation of the function configured below.*	0
		Pulse duration	Value from 0 to 65535 *Minimum activation time in milliseconds for the function configured below.*	0
		Switch-off delay	Value from 0 to 65535 *Time in milliseconds for which the function configured below remains activated after the switching input signal is deactivated and the pulse duration has expired.*	0
		Function	No BCL500i function Reading gate start/stop Rd. gate stop Rd. gate start Teach reference code Autoconfig start/stop *The function set here is carried out after the switching input is activated.*	Reading gate start/stop

Table 8.3: Digital SWIO submenu

Level 3	Level 4	Level 5	Selection/configuration option *Description*	Standard
	Switching output	Inverted	OFF / ON *OFF = activated switching output upon high level* *ON = activated switching output upon low level*	OFF
		Signal delay	Value from 0 to 65535 *Time in milliseconds between activation function and switching of the switching output.*	0
		Pulse duration	Value from 0 to 65535 *Switch-on time of the switching output in milliseconds. If the Pulse duration is set to 0, the switching output is switched on via the Activation function and switched off via the Deactivation function.* *If the Pulse duration is greater than 0, the Deactivation function has no effect.*	400
		Activation function 1	No function Reading gate start Reading gate end Positive reference code comparison 1 Negative reference code comparison 1 Valid read result Invalid read result Device ready Device not ready Data transmission active Data transmission not active AutoCont. good quality AutoCont. bad quality Reflector detected Reflector not detected External event, pos. edge External event, neg. edge Device active Device standby No device error Device error Positive reference code comparison 2 Negative reference code comparison 2 *The function set here specifies which event activates the switching output.*	No function
		Deactivation function 1	See Activation function 1 for selection options *The function set here specifies the event that deactivates the switching output.*	No function

Table 8.3: Digital SWIO submenu

Level 3	Level 4	Level 5	Selection/configuration option *Description*	Standard
Sw. input/ output 2	I/O mode		Input / Output / Passive	Output
	Switching input	Inverted	OFF / ON	OFF
		Debounce time	Value from 0 to 1000	5
		Start-up delay	Value from 0 to 65535	0
		Pulse duration	Value from 0 to 65535	0
		Switch-off delay	Value from 0 to 65535	0
		Function	*see switching input/output 1*	No function
	Switching output	Inverted	OFF / ON	OFF
		Signal delay	Value from 0 to 65535	0
		Pulse duration	Value from 0 to 65535	400
		Activation function 2	*see switching input/output 1*	Valid read result
		Deactivation function 2	*see switching input/output 1*	Reading gate start
Sw. input/ output 3	I/O mode		Input / Output / Passive	Input
	Switching input	Inverted	OFF / ON	OFF
		Debounce time	Value from 0 to 1000	5
		Start-up delay	Value from 0 to 65535	0
		Pulse duration	Value from 0 to 65535	0
		Switch-off delay	Value from 0 to 65535	0
		Function	*see switching input/output 1*	Reading gate start/stop
	Switching output	Inverted	OFF / ON	OFF
		Signal delay	Value from 0 to 65535	0
		Pulse duration	Value from 0 to 65535	400
		Activation function 3	*see switching input/output 1*	No function
		Deactivation function 3	*see switching input/output 1*	No function
Sw. input/ output 4	I/O mode		Input / Output / Passive	Output
	Switching input	Inverted	OFF / ON	OFF
		Debounce time	Value from 0 to 1000	5
		Start-up delay	Value from 0 to 65535	0
		Pulse duration	Value from 0 to 65535	0
		Switch-off delay	Value from 0 to 65535	0
		Function	*see switching input/output 1*	No function
	Switching output	Inverted	OFF / ON	OFF
		Signal delay	Value from 0 to 65535	0
		Pulse duration	Value from 0 to 65535	400
		Activation function 4	*see switching input/output 1*	Invalid read result
		Deactivation function 4	*see switching input/output 1*	Reading gate start

Table 8.3: Digital SWIO submenu

EtherNet/IP

The Ethernet/IP submenu is used to configure the communication interfaces of the BCL 558*i*.

Level 3	Level 4	Level 5	Level 6	Selection/configuration option ***Description***	Standard
Activation				Off/On *Activates/deactivates the EtherNet/IP interface of the BCL 558i.*	On
EtherNet/IP interface	IP address			The IP address can be set to any value in the xxx.xxx.xxx.xxx format. *Normally, the network administrator specifies the IP address that is to be set here. If DHCP is activated, the setting made here has no effect and the BCL 558i is set to the values that it obtains from the DHCP server.*	0.0.0.0
	Gateway			The gateway address can be set to any value in the xxx.xxx.xxx.xxx format. *The BCL 558i communicates with participants in other subnets via the gateway. Splitting the read application over multiple subnets is rather uncommon; the setting of the gateway address, thus, usually has no meaning.*	0.0.0.0
	Net mask			The net mask can be set to any value in the xxx.xxx.xxx.xxx format. *Usually, the BCL 558i is used in a private Class C network and the default setting can be accepted without change.* ***Attention**: It is possible to enter any values for xxx.xxx.xxx.xxx. Only the values 255 or 000 are permissible for xxx, however. If other values are set, an error message appears upon restart of the BCL 558i.*	0.0.0.0
	DHCP activated			Off/On *If DHCP is activated, the BCL 558i draws its settings for IP address, gateway and net mask from a DHCP server. The manual settings made above have no effect, but are retained and are again active if DHCP is deactivated.*	On
	BootP activated			Off/On *If BootP is activated, the BCL 558i draws its settings for IP address, gateway and net mask from a BootP server. The manual settings made above have no effect, but are retained and are again active if BootP is deactivated.*	Off

Table 8.4: EtherNet/IP submenu

8.3.3 Language selection menu

Currently, there are 5 display languages available:

- German
- English
- Spanish
- French
- Italian

The display language and the language of the webConfig user interface are synchronized. The setting in the display affects the webConfig tool and vice versa.

8.3.4 Service menu

Diagnostics

This menu item is used exclusively for service purposes by Leuze electronic.

Status messages

This menu item is used exclusively for service purposes by Leuze electronic.

8.3.5 Actions menu

Start decoding

Here, you can perform a single reading via the display.

↳ *Use the ↵ button to activate the single read operation and place a bar code in the reading field of the BCL 558i.*

The laser beam is switched on and the following display appears:

```
Actions
o Stop decoding
      zzzzzzzzz
```

Once the bar code is detected, the laser beam is switched off again. The read result zzzzzzzzz is shown directly in the display for about 1 s. After that, the Actions menu is displayed again.

Start alignment

The alignment function makes it easy to align the BCL 558*i* by optically displaying the read quality.

↳ *Use the ↵ button to activate the alignment function and place a bar code in the reading field of the BCL 558i.*

At first, the laser beam is switched on continuously, enabling you to position the bar code securely in the reading field. Once the bar code is read, the laser beam is switched off briefly and the following display appears:

```
Actions
o Stop alignment
   xx   zzzzzzzzz
```

xx	Read quality in % (scans with info)
zzzzzz:	Contents of the decoded bar code.

Once the bar code has been detected, the laser beam starts to flash.

The flash frequency provides visual information on the read quality. The faster the laser beam flashes, the higher the read quality.

Start auto-setup

The auto-setup function provides an easy option for configuring the code type and number of digits of `Decoder 1`.

↳ *Use the ↵ button to activate the auto-setup function and place an unknown bar code in the reading beam of the BCL 558i.*

The following display appears:

```
Actions
o Stop auto-setup
xx yy zzzzzz
```

The following information is displayed:

`xx`	Code type of the detected code (sets the code type of Decoder 1)
'01'	2/5 Interleaved
'02'	Code 39
'03'	Code 32
'06'	UPC (A, E)
'07'	EAN
'08'	Code 128, EAN 128
'10'	EAN Addendum
'11'	Codabar
'12'	Code 93
'13'	GS 1 Databar Omnidirectional
'14'	GS 1 Databar Limited
'15'	GS 1 Databar Expanded
`yy`	Number of digits of the detected code (sets the number of digits of Decoder 1)
`zzzzzz`:	Contents of the decoded label. A ↑ appears if the label was not correctly read.

Start teach-in

The teach-in function can be used to conveniently read reference code 1.

↳ *Use the ↵ button to activate the teach-in function and place a bar code which contains the content that you wish to store as the reference code in the reading beam of the BCL 558i.*

The following display appears:

```
Actions
o Stop teach-in
  RC13xxzzzzzz
```

The following information is displayed:

`RC13`	means that reference code number 1 is stored in RAM. This is always output.
`xx`	defined code type (see auto-setup)
`z`	defined code information (1 … 63 characters)

8.4 Operation

Shown here is an example describing important operating procedures in detail.

Parameter enabling

During normal operation parameters can only be viewed. If parameters need to be changed, the **ON** menu item in the **Parameter enabling** menu must be activated. To do this proceed as follows:

```
Parameter                1
  Parameter handling
  Decoder table
  Digital SWIO
  EtherNet/IP
```

In the Parameter menu, use the ▲▼ buttons to select the `Parameter handling` menu item.

Press the enter button to enter the `Parameter handling` menu.

```
Parameter handling 1.1

o Parameter enabling
☐ Parameters to default
```

In the Parameter handling menu, use the ▲▼ buttons to select the `Parameter enabling` menu item.

Press the enter button to enter the `Parameter enabling` menu.

```
Parameter enabling
  OFF
o ON

Standard ----- Unit
   OFF  |    |
```

In the Parameter enabling menu, use the ▲▼ buttons to select the `ON` menu item.

Press the enter button to switch on parameter enabling.

```
Parameter enabling

  OFF
O ON

Standard -------- Unit
   OFF  |    |
```

The PWR LED lights up red. You can now set individual parameters via the display.

ESC ESC

Press the ESC button twice to return to the main menu.

Network configuration

Information on network configuration can be found in chapter "Commissioning and configuration" on page 110.

9 Leuze webConfig tool

With the **Leuze webConfig tool**, an operating-system independent, web-technology based, graphical user interface is available for configuring bar code readers of the **BCL 500*i*** series.

Through the use of HTTP as communication protocol and by using only standard technologies on the client side (HTML, JavaScript and AJAX), which are supported by all commonly used, modern browsers (e.g. **Mozilla Firefox** beginning with Version 2 or **Internet Explorer** beginning with Version 7.0), it is possible to operate the **Leuze webConfig tool** on any internet-ready PC.

9.1 Connecting the SERVICE USB interface

The connection to the SERVICE USB interface of the BCL 558*i* is established via the PC-side USB interface using a special USB cable with 2 type A/A connectors.

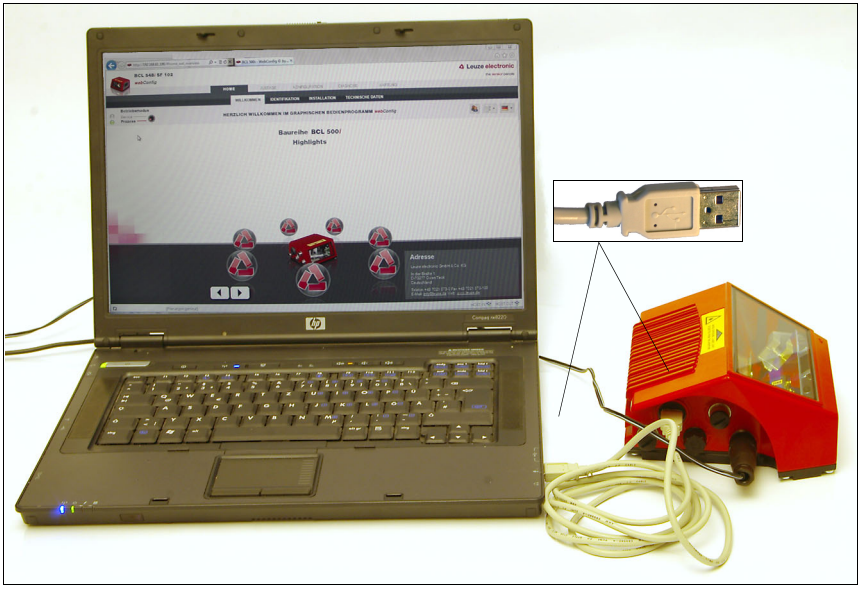

Figure 9.1: Connecting the SERVICE USB interface

9.2 Installing the required software

9.2.1 System requirements

Operating system:	Windows 2000 Windows XP (Home Edition, Professional) Windows Vista Windows 7
Computer:	PC with USB interface version 1.1 or higher
Graphics card:	min. 1024 x 768 pixels or higher resolution
Required hard-disk capacity:	approx. 10MB

Notice!

It is recommended to update the operating system regularly and to install the current Windows service packs.

9.2.2 Installing the USB driver

In order for the BCL 558*i* to be automatically detected by the connected PC, the **USB driver** must be installed **once** on your PC. To do this, you must have **administrator privileges**.

Please proceed according to the following steps:

- *Start your PC with administrator privileges and log on.*
- *Load the CD included in the delivery contents of your BCL 558i in the CD drive and start the "setup.exe" program.*
- *Alternatively, you can also download the setup program from the internet at www.leuze.com.*
- *Follow the instructions provided by the setup program.*

Upon successful installation of the USB driver, a BCL 50xi icon automatically appears on the desktop.

To check: In the Windows Device Manager, a device called "Leuze electronic, USB Remote NDIS Network Device" appears under the "Network adapter" device class following successful USB registration.

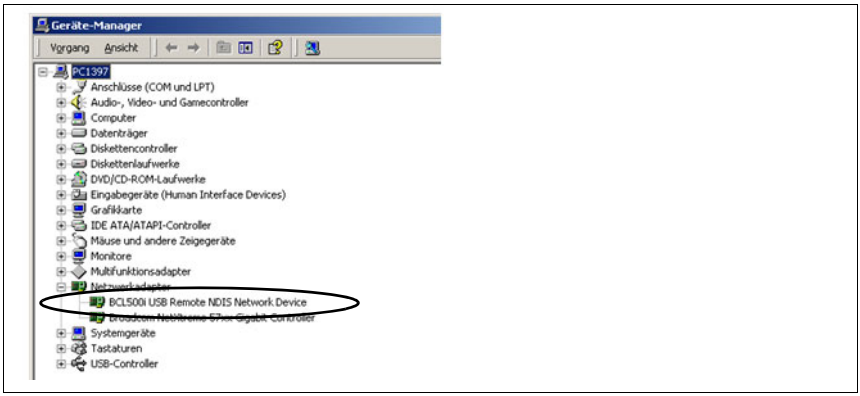

Figure 9.2: Device Manager with connected BCL 558*i*

Notice!

If the installation failed, contact your network administrator: The settings of the firewall used may need to be adjusted.

9.3 Starting the webConfig tool

To start the **webConfig tool**, click the BCL 50xi icon located on the desktop. Make certain that the BCL 558*i* is connected to the PC via the USB interface and that voltage is connected.

Or alternatively: Open a browser on your PC and enter the following address: **192.168.61.100**

This is the default Leuze maintenance address for communication with bar code readers of the BCL 500*i* series.

In both cases, the following start page appears on your PC.

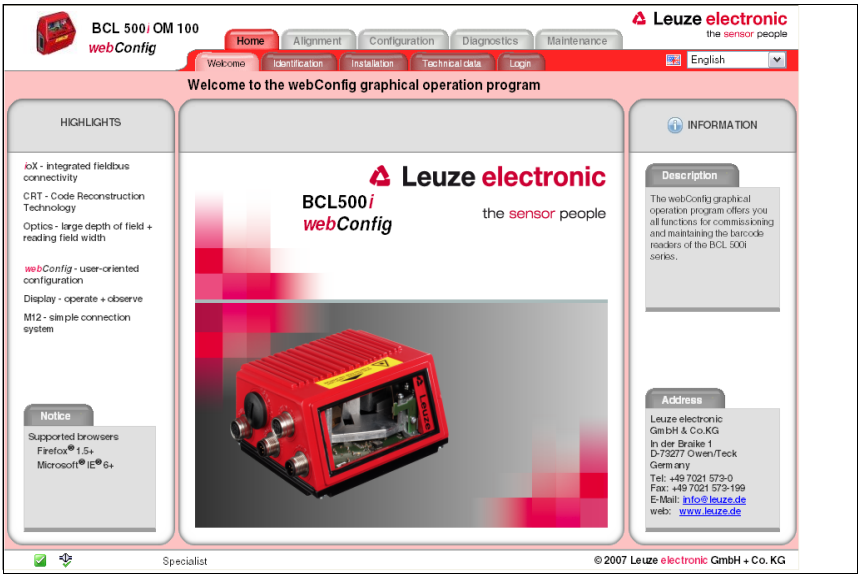

Figure 9.3: The start page of the webConfig tool

Notice!

The webConfig tool is completely contained in the firmware of the BCL 558i. Depending on firmware version, the start page may vary from that shown above.

The individual parameters are – where useful – graphically displayed in order to better illustrate the meaning of the what are often perceived as abstract parameters.

The result is an easy-to-use and practically-oriented user interface!

9.4 Short description of the webConfig tool

The webConfig tool has 5 main menus:

- Home
  with information on the connected BCL 558*i* as well as on installation. This information corresponds to the information in this handbook.
- Alignment
  for manually starting read processes and for aligning the bar code reader. The results of the read processes are displayed immediately. As a result, this menu item can be used to determine the optimum installation location.
- Configuration
  for adjusting decoding, for data formatting and output, switching inputs/outputs, communication parameters and interfaces, etc. …
- Diagnostics
  for event logging of warnings and errors.
- Maintenance
  for updating the firmware.

The user interface of the webConfig tool is largely self-explanatory.

9.4.1 Module overview in the Configuration menu

The adjustable parameters of the BCL 558*i* are clustered in modules in the Configuration menu.

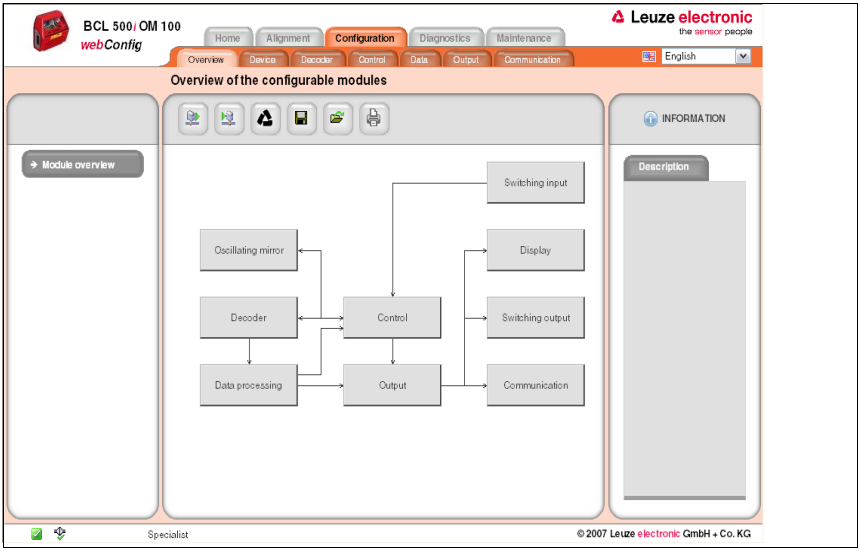

Figure 9.4: Module overview in the webConfig tool

Notice!

The webConfig tool is completely contained in the firmware of the BCL 558i. Depending on firmware version, the module overview may vary from that shown above.

The individual modules and their relationships to one another are graphically displayed in the module overview. The display is context sensitive, i.e. click a module to directly access the corresponding submenu.

An overview of the modules:

- `Decoder`
  Definition of code types, code-type features and number of digits of the labels that are to be decoded
- `Data processing`
  Filtering and processing of the decoded data
- `Output`
  Sorting of the processed data and comparison with reference codes
- `Communication`
  Formatting of the data for output via the communication interfaces
- `Control`
  Activation/deactivation of decoding
- `Switching input`
  Activation/deactivation of read processes
- `Switching output`
  Definition of events which activate/deactivate the switching output
- `Display`
  Formatting of the data for output on the display
- `Oscillating mirror` (optional)
  Adjustment of oscillating mirror parameters

10 Commissioning and configuration

Attention Laser!

Observe the safety notices in chapter 2!

This chapter describes basic configuration steps which you can carry out either via the webConfig tool or the display.

Via the webConfig tool

The most convenient way to configure the BCL 558*i* is via the webConfig tool. Only the webConfig tool gives you access to all settings of the BCL 558*i*. To use the webConfig tool, you need to establish a USB connection between the BCL 558*i* and a PC/laptop.

Notice!

Notes on the use of the webConfig tool can be found in chapter 9 "Leuze webConfig tool" on page 104.

Via display

The display offers basic configuration options for the BCL 558*i*. Configuration via the display is appropriate if you want to configure simple reading tasks and you cannot or do not want to set up a USB connection between the BCL 558*i* and a PC/laptop.

Notice!

Notes on the use of the display can be found in chapter 8 "Display and control panel" on page 86. An overview of the menu structure and brief instructions for operating the display can be found in the two fold-out pages at the beginning and end of this technical description.

10.1 Measures to be performed prior to the initial commissioning

Before commissioning, familiarize yourself with the operation and configuration of the BCL 558i.

Before connecting the supply voltage, recheck all connections and ensure that they have been properly made.

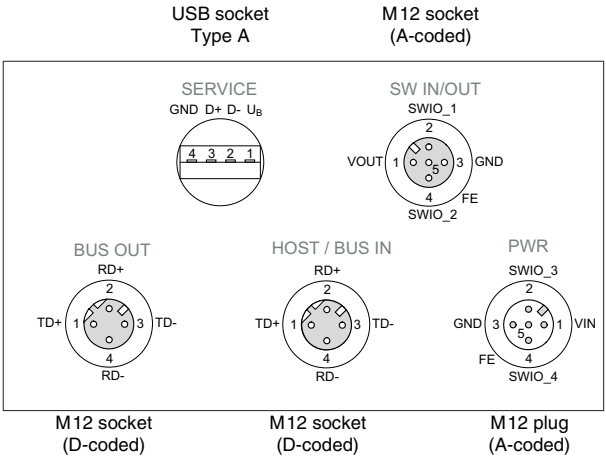

Figure 10.1: Connections of the BCL 558*i*

10.2 Starting the device

Connect the supply voltage +10 … 30VDC (typ. +24VDC); the BCL 558i starts up and the bar code reading window appears on the display:

By default, parameter enabling is deactivated and you cannot change any settings. If you wish to carry out the configuration via the display, you must activate parameter enabling. Further information can be found in chapter "Parameter enabling" on page 103.

Notice!

The BCL 558i can decode the following code types in the standard setting:

- ***Code 128*** *Number of digits 4 … 63*
- ***2/5 Interleaved*** *number of digits 10*
- ***Code 39*** *Number of digits 4 … 30*
- ***EAN 8 / 13*** *Number of digits 8 and 13*
- ***UPC*** *Number of digits 8*
- ***Codabar*** *Number of digits 4 … 63*
- ***Code 93*** *Number of digits 4 … 63*

Deviations from these settings must be set via the webConfig tool. See "Leuze webConfig tool" on page 104.

As a first step, you need to set the communication parameters of the BCL 558i.

10.3 Setting the communication parameters

With the communication parameters, you determine how data is exchanged between BCL 558i and host system, monitor PCs etc.

The communication parameters are **independent** of the topology in which the BCL 558i is operated (see "Ethernet topologies" on page 84).

On delivery, the automatic address assignment via DHCP server is defined as the standard setting of the BCL 558i.

10.3.1 Manually setting the IP address

There are three ways to set the IP address manually. Either via **BootP/DHCP server tool** or via the **webConfig tool** using the USB connection or via the display in the **Parameter menu**. For this purpose, the DHCP operation in the BCL 558*i* must be deactivated.

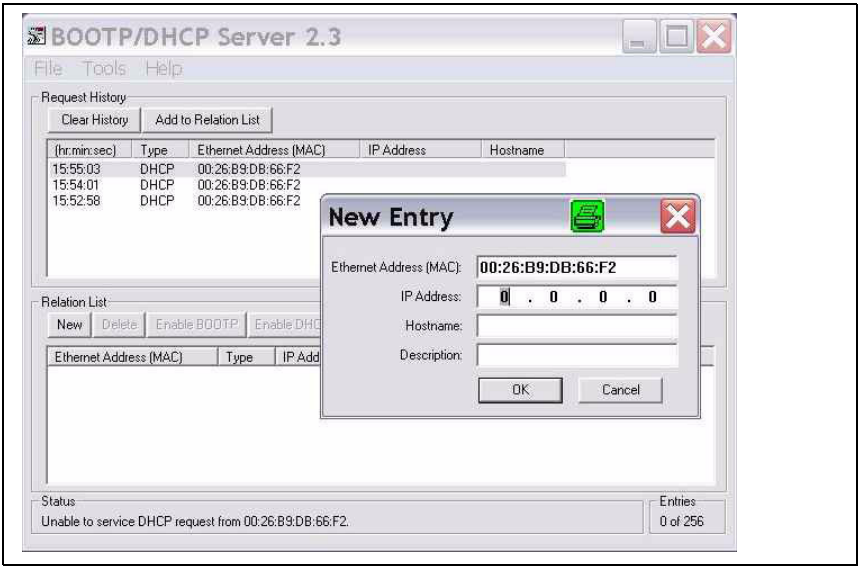

Figure 10.2: Manually setting the IP address

If no DHCP server is present in your system, you must permanently set the IP address of the BCL 558*i*. Proceed as follows:

- Have the network administrator specify the data for IP address, net mask and gateway address of the BCL 558*i*.
- Connect the BCL 558*i* to your computer using the service cable.
- Set these values on the BCL 558*i*:
  Via webConfig tool
  - In the main menu, select `Configuration`, submenu `Communication` -> `Ethernet interface`.
  - Deactivate the DHCP operation and enter the IP address.

Or, alternatively, via the display

↳ *In the main menu, use the ▲▼ buttons to select the Parameter menu and use the enter button ↵ to activate the Parameter menu. The following screen appears:*

```
Parameter                1
  Parameter handling
  Decoder table
  Digital SWIO
o EtherNet/IP
```

In the Parameter menu, use the ▲▼ buttons to select the `Ethernet/IP` menu item.

↵

Press the enter button to enter the `Ethernet` menu.

```
Ethernet

o Ethernet interface
```

Use the ▲▼ buttons to select the `Ethernet interface` menu item.

↵

Press the enter button to enter the `Ethernet interface` menu.

```
Ethernet interface
o IP address
  Gateway
  Net mask
  DHCP activated
```

Use the ▲▼ buttons to successively select the `IP address`, `Gateway` and `Net mask` menu items and set the desired values.

ESC

Exit the Ethernet menu with the ESCAPE button.

Notice!

If the IP address is set via the webConfig tool, then it becomes active after transfer to the device. A restart is not required.

10.4 Configuration steps for a Rockwell control without EDS support

10.4.1 Integrating the hardware into the PLC using the generic Ethernet module

In configuration tool **RSLogix 5000 up to software version 20.00**, a so-called **generic Ethernet module** is created under the Communication path for the BCL 558*i*.

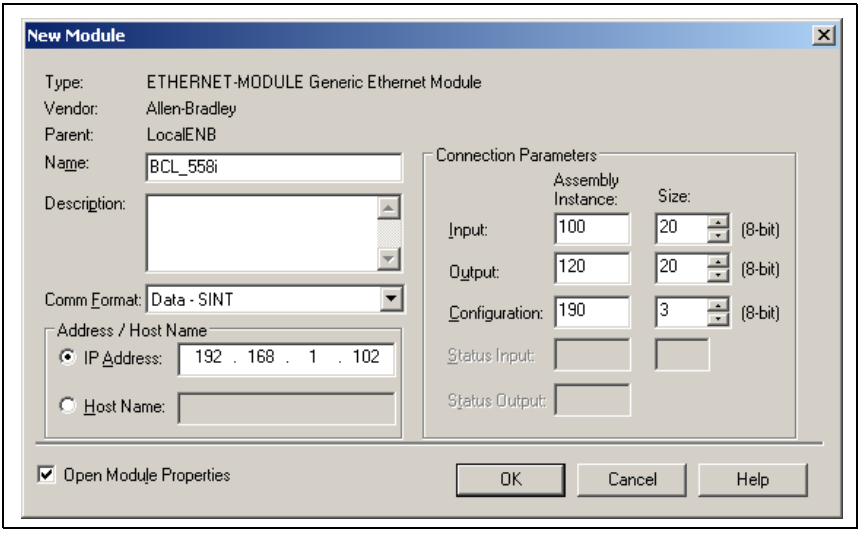

Figure 10.3: Generic Ethernet module

The input mask for the generic module describes the following parameters to be set:

- The name of the participant (can be selected freely; e.g. BCL 558*i*).
- The format of I/O data (data - SINT = 8 bits).
- The IP address of the participant.
- The address and length of the input assembly (instance 100, instance 101 or instance 102; min 1 byte - up to max. 266 bytes for the default input assembly of the read results).
- The address and length of the output assembly (instance 120, instance 121 or instance 122; min 1 byte - up to max. 263 bytes for the default output assembly).
- The address and length of the configuration assembly (instance 190; 3 bytes).

10.5 Configuration steps for a Rockwell control with EDS support

The following steps are necessary for commissioning with a Rockwell control:

- Creation of the EtherNet/IP participants in PLC software **RSLogix 5000 from Version 20.00 and up** (with EDS support).
- Installation of the EDS file using the EDS wizard.
- Setting the parameters of the BCL 558*i* via the configuration assembly or webConfig.

10.5.1 Integrating the hardware into the PLC and installing the EDS file

To integrate the device and to establish a connection between the PLC and the device BCL 558*i*, proceed as follows:

- First, load the EDS file for the device **via EDS wizard** into the PLC database.

Notice!

You can find the EDS file at: www.leuze.com

- After it has downloaded, select the device from the device list.
- Open the input dialog for setting the address and additional parameters by double-clicking on the device symbol and make the desired entries here. Under **Change**, define the combination of input and output assemblies.

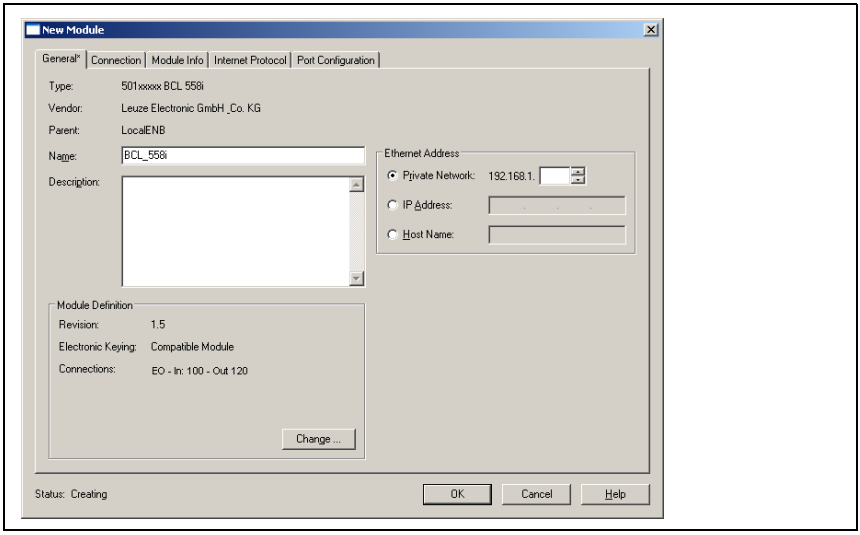

Figure 10.4: New module

- Finally, transmit the values to the control via download.

10.6 EDS file - general info

The EDS file contains all identification and communication parameters of the device, as well as the available objects. PLC software **RSLogix 5000** from Rockwell offers **EDS support for EtherNet/IP from software version 20.00 and up.**

The BCL 558*i* is uniquely classified via a class 1 identity object (component of the **BCL558i.eds** file) for the EtherNet/IP scanner. The identity object contains, among other things, a manufacturer-specific vendor ID, as well as an ID that describes the principle function of the participant.

If accepting the objects without change, all parameters are set to default values. The default settings are shown in the objects described in detail in the **Default** column.

Notice!

In the following tables, all attributes marked in the Access *column with* Get *in the individual objects are to be understood as inputs of the control. Attributes marked in the* Access *column with* Set *represent outputs or parameters.*

10.7 Detailed EDS description

10.7.1 Class 1 - Identity object

Object class 1 = 0x01

Services:

- Get attribute single 0x0E
- Reset type 0x05

Path			Designation	Size in bit	Data type	Default (dec)	Min (dec)	Max (dec)	Access
Cl.	Inst.	Attr.							
1	1	1	Vendor-Id	16	UINT	524	-	-	Get
		2	device type	16	UINT	43	-		Get
		3	Product Code	16	UINT	1	-		Get
		4	Revision (Major, minor)	16	Struct{ USINT major, USINT minor};	Major = 1, Minor = 1	Major = 1, Minor = 1	Major = 127, Minor = 999	Get
		5	Status	16	WORD	See CIP specification (5-2.2.1.5 status)			Get
		6	Serial number	32	UDINT	Manufacturer specific			Get
		7	Product name	(max. 32) x 8	SHORT_STRING	"BCL 558i"			Get

In the network configuration (e.g., **RSLogix 5000**, **generic module**), it is possible to specify when entering the individual participants which attributes of the scanner are to be monitored from the identity object.

Vendor ID

The vendor ID assigned by **ODVA** for **Leuze electronic GmbH + Co. KG** is 524_D.

Device type

The BCL 558*i* is defined as a **generic device (keyable)** by Leuze electronic.
According to **ODVA**, the BCL 558*i* is assigned number 43_D = 0x2B.

Product Code

The **product code** is an ID assigned by Leuze electronic that has no further impact on other objects.

Revision

Version number of the identity object.

Status

The device status is displayed in the status byte, the first part of the telegram.

Bit 7	Bit 6	Bit 5	Bit 4	Bit 3	Bit 2	Bit 1	Bit 0
ext. device state				reserved	configured	reserved	owned
Bit 15	Bit 14	Bit 13	Bit 12	Bit 11	Bit 10	Bit 9	Bit 8
reserved							

Serial number

For use in EtherNet/IP, the serial number receives a serial number converted according to CIP. CIP describes a special format for the serial number. After conversion to a CIP code, the serial number is, as before, unique, but no longer corresponds in its resolution to the serial number on the name plate.

Product name

This attribute contains a short designation of the product. Devices with the same product code may have different **product names**.

10.7.2 Class 4 - Assembly

The following assemblies are supported by the profile. A distinction is made between input and output assembly. The input assembly groups the data from the BCL 558*i* for the control. The data from the control are transmitted to the BCL 558*i* via the output assembly.

10.7.2.1 Input assembly

The input assembly is the cyclical data from the BCL 558*i* to the control. The following three input assemblies are supported.

Input assembly instance 100

Instance 100, attribute 3

Input assembly, length min. 1 byte
max. 260 bytes

Inst.	Byte	Bit 7	Bit 6	Bit 5	Bit 4	Bit 3	Bit 2	Bit 1	Bit 0
100	0	Device status							
	1	Number of results							
	2	Reserved		Waiting for acknowl-edgement	New result (toggle bit)	Buffer overflow	Further results in the buffer	User data or command	Status activation
	3	Result data length (low byte)							
	4	Result data length (high byte)							
	5	Data byte 0							
	6	Data byte 1							
	…	…							
	259	Data byte 254							

The number of data starting at byte 5 is defined in the control while configuring the BCL 558*i*. This makes it possible to use the assembly with any length.

Notice!

The use of the assembly is illustrated with examples at the end of this chapter.

Notice!

Formula for calculating the assembly length:

Length of the assembly = 5 + length of the result/bar code

For results/bar codes with length 10*, the assembly must be configured with a length of* 5 + 10 = 15.

Input assembly instance 101

Instance 101, attribute 3

Input assembly, length min. 1 byte
max. 264 bytes

Inst.	Byte	Bit 7	Bit 6	Bit 5	Bit 4	Bit 3	Bit 2	Bit 1	Bit 0
101	0	Device status							
	1	Reserved	Error code			Reserved		Data rejection (toggle bit)	Data acceptance (toggle bit)
	2	Fragment number (see chapter 10.7.5 "Class 107 - Result data")							
	3	Remaining fragments (see chapter 10.7.5 "Class 107 - Result data")							
	4	Fragment size (see chapter 10.7.5 "Class 107 - Result data")							
	5	Number of results							
	6	Reserved		Waiting for acknowl-edgement	New result (toggle bit)	Buffer overflow	Further results in the buffer	User data or command	Status activation
	7	Result data length (low byte)							
	8	Result data length (high byte)							
	9	Data byte 0							
	10	Data byte 1							
	…	…							
	263	Data byte 254							

The number of data starting at byte 9 is defined in the control while configuring the BCL 558*i*. This makes it possible to use the assembly with any length.

Notice!

The use of the assembly is illustrated with examples at the end of this chapter.

Notice!

Formula for calculating the assembly length:

Length of the assembly = 9 + length of the result/bar code

For results/bar codes with length 10*, the assembly must be configured with a length of* 9 + 10 = 19.

Input assembly instance 102

Instance 102, attribute 3

Input assembly, length min. 1 byte
max. 266 bytes

Inst.	Byte	Bit 7	Bit 6	Bit 5	Bit 4	Bit 3	Bit 2	Bit 1	Bit 0
102	**0**	Device status							
	1	Reserved	Switching output comparison state **2** (toggle bit)	Switching output comparison state **2**	Status input/output I/O **2**	Reserved	Switching output comparison state **1** (toggle bit)	Switching output comparison state **1**	Status input/output I/O **1**
	2	Reserved	Switching output comparison state **4** (toggle bit)	Switching output comparison state **4**	Status input/output I/O **4**	Reserved	Switching output comparison state **3** (toggle bit)	Switching output comparison state **3**	Status input/output I/O **3**
	3	Reserved	Error code			Reserved		Data rejection (toggle bit)	Data acceptance (toggle bit)
	4	Fragment number (see chapter 10.7.5 "Class 107 - Result data")							
	5	Remaining fragments (see chapter 10.7.5 "Class 107 - Result data")							
	6	Fragment size (see chapter 10.7.5 "Class 107 - Result data")							
	7	Number of results							
	8	Reserved		Waiting for acknowledgement	New result (toggle bit)	Buffer overflow	Further results in the buffer	User data or command	Status activation
	9	Result data length (low byte)							
	10	Result data length (high byte)							
	11	Data byte 0							
	12	Data byte 1							
	…	…							
	265	Data byte 254							

The number of data starting at byte 11 is defined in the control while configuring the BCL 558*i*. This makes it possible to use the assembly with any length.

Notice!

The use of the assembly is illustrated with examples at the end of this chapter.

Notice!

Formula for calculating the assembly length:

Length of the assembly = 11 + length of the result/bar code

For results/bar codes with length 10*, the assembly must be configured with a length of* 11 + 10 = 21*.*

10.7.2.2 Output assembly

The output assembly is the cyclical data from the control to the BCL 558*i*. The following output assemblies are supported.

Output assembly instance 120

Instance 120, attribute 3

Output assembly, length min. 1 byte
max. 263 bytes

Inst.	Byte	Bit 7	Bit 6	Bit 5	Bit 4	Bit 3	Bit 2	Bit 1	Bit 0
120	0	Reserved			Standby	Error acknowledge	Data reset	Data acknowl-edgement	Activation signal
	1	Reset event counter **4**	Activation switching output **4** 1)	Reset event counter **3**	Activation switching output **3** 1)	Reset event counter **2**	Activation switching output **2** 1)	Reset event counter **1**	Activation switching output **1** 1)
	2	Fragment number (see chapter 10.7.6 "Class 108 - Entry data")							
	3	Remaining fragments (see chapter 10.7.6 "Class 108 - Entry data")							
	4	Fragment size (see chapter 10.7.6 "Class 108 - Entry data")							
	5	Reserved						New entry (toggle bit)	New data
	6	Entry data length (low byte)							
	7	Entry data length (high byte)							
	8	Data byte 0							
	9	Data byte 1							
	…	…							
	262	Data byte 254							

1) To be able to use the **Activation switching output** function, the output function must be set to **External event** in webConfig.

The number of data starting at byte 8 is defined in the control while configuring the BCL 558*i*. This makes it possible to use the assembly with any length.

It is also possible to specify the length of the assembly with one byte and thereby only use the control bits. With a length of 2 bytes, the I/O monitoring control bits can be used in addition to the control bits.

Notice!

The use of the assembly is illustrated with examples at the end of this chapter.

Notice!

Formula for calculating the assembly length:

Length of the assembly = 8 + length of the entry data

For entry data with length 10*, the assembly must be configured with a length of* 8 + 10 = 18.

Output assembly instance 121

Instance 121, attribute 3

Output assembly, length min. 1 byte
max. 262 bytes

Inst.	Byte	Bit 7	Bit 6	Bit 5	Bit 4	Bit 3	Bit 2	Bit 1	Bit 0
121	0	Reserved			Standby	Error acknowledge	Data reset	Data acknowl-edgement	Activation signal
	1	Fragment number (see chapter 10.7.6 "Class 108 - Entry data")							
	2	Remaining fragments (see chapter 10.7.6 "Class 108 - Entry data")							
	3	Fragment size (see chapter 10.7.6 "Class 108 - Entry data")							
	4	Reserved						New entry (toggle bit)	New data
	5	Entry data length (low byte)							
	6	Entry data length (high byte)							
	7	Data byte 0							
	8	Data byte 1							
	…	…							
	261	Data byte 254							

The number of data starting at byte 7 is defined in the control while configuring the BCL 558*i*. This makes it possible to use the assembly with any length.

It is also possible to specify the length of the assembly with one byte and thereby only use the control bits.

Notice!

The use of the assembly is illustrated with examples at the end of this chapter.

Notice!

Formula for calculating the assembly length:

Length of the assembly = 7 + length of the entry data

For entry data with length 10*, the assembly must be configured with a length of* 7 + 10 = 17*.*

Output assembly instance 122

Instance 122, attribute 3

Output assembly, length min. 1 byte
max. 261 bytes

Inst.	Byte	Bit 7	Bit 6	Bit 5	Bit 4	Bit 3	Bit 2	Bit 1	Bit 0
122	0	Fragment number (see chapter 10.7.6 "Class 108 - Entry data")							
	1	Remaining fragments (see chapter 10.7.6 "Class 108 - Entry data")							
	2	Fragment size (see chapter 10.7.6 "Class 108 - Entry data")							
	3	Reserved						New entry (toggle bit)	New data
	4	Entry data length (low byte)							
	5	Entry data length (high byte)							
	6	Data byte 0							
	7	Data byte 1							
	…	…							
	260	Data byte 254							

The number of data starting at byte 6 is defined in the control while configuring the BCL 558*i*. This makes it possible to use the assembly with any length.

Notice!

The use of the assembly is illustrated with examples at the end of this chapter.

Notice!

Formula for calculating the assembly length:

Length of the assembly = 6 + length of the entry data

For entry data with length 10*, the assembly must be configured with a length of* 6 + 10 = 16.

10.7.2.3 Configuration assembly

The configuration assembly is the data from the control to the BCL 558*i* which is transferred as the configuration during the establishment of communication. The following configuration assembly is supported.

Configuration assembly instance 190

Instance 190, attribute 3

Configuration assembly, length 3 bytes

Inst.	Byte	Bit 7	Bit 6	Bit 5	Bit 4	Bit 3	Bit 2	Bit 1	Bit 0
190	0	Reserved							Mode 0 = without ACK 1 = with ACK
	1	Reserved							Activate result fragmentation 0 = fragmentation inactive 1 = fragmentation active
	2	Reserved							Activate entry fragmentation 0 = fragmentation inactive 1 = fragmentation active

Byte	Cross reference address	Bit assignment (default)								Default
		7	6	5	4	3	2	1	0	
0	106 / 1 / 1	–	–	–	–	–	–	–	0	0x00
1	107 / 1 / 9	–	–	–	–	–	–	–	0	0x00
2	108 / 1 / 8	–	–	–	–	–	–	–	0	0x00

Notice!

*In the configuration assembly, all parameters have the value **0**. Changing the individual default values is possible at any time. The participant is thereby defined in off-line mode; the data must subsequently be transferred to the control.*

10.7.3 Class 103 - I/O status and control

This class is for handling switching input and switching output signals.

Object class 103 = 0x67

Services:

- Get attribute single 0x0E
- Set attribute single 0x10

Path			Designation	Size in bit	Data type	Default (dec)	Min (dec)	Max (dec)	Access
Cl.	Inst.	Attr.							
103	1	1-4	Reserved						
SWIO_1		5	Status (input/output)	8	U8	0	0	1	Get
		6	Output activation	8	U8	0	0	1	Set
		7	Reset Event Counter	8	U8	0	0	1	Set
		8	Switching output comparative state (event counter)	8	U8	0	0	1	Get
		9	Switching output comparative state toggle bit (event counter)	8	U8	0	0	1	Get
103	2	1-4	Reserved						
SWIO_2		5	Status (input/output)	8	U8	0	0	1	Get
		6	Output activation	8	U8	0	0	1	Set
		7	Reset Event Counter	8	U8	0	0	1	Set
		8	Switching output comparative state (event counter)	8	U8	0	0	1	Get
		9	Switching output comparative state toggle bit (event counter)	8	U8	0	0	1	Get
103	3	1-4	Reserved						
SWIO_3		5	Status (input/output)	8	U8	0	0	1	Get
		6	Output activation	8	U8	0	0	1	Set
		7	Reset Event Counter	8	U8	0	0	1	Set
		8	Switching output comparative state (event counter)	8	U8	0	0	1	Get
		9	Switching output comparative state toggle bit (event counter)	8	U8	0	0	1	Get
103	4	1-4	Reserved						
SWIO_4		5	Status (input/output)	8	U8	0	0	1	Get
		6	Output activation	8	U8	0	0	1	Set
		7	Reset Event Counter	8	U8	0	0	1	Set
		8	Switching output comparative state (event counter)	8	U8	0	0	1	Get
		9	Switching output comparative state toggle bit (event counter)	8	U8	0	0	1	Get

Notice!

Toggle bits are control and monitoring control flags which are not level-sensitive, but rather triggered by edges.

Attributes 1-4

Attributes 1-4 are not supported in this profile.

Status (input/output)

Signal state of switching input or output.

Output activation

Sets the state of the switching output.

0	Switching output	0 - low - inactive
1	Switching output	1 - high - active

Reset Event Counter

Resets the event counter of the activation function back to zero.

0 → 1	perform reset
1 → 0	no function

Switching output comparative state (event counter)

Indicates whether the event counter has exceeded the set comparative value.

The bit is reset to the init. value by resetting the event counter.

0	not exceeded
1	exceeded

Switching output comparative state toggle bit (event counter)

If **SWOUT switches several times** was configured as comparison mode, this bit is toggled each time the event counter is exceeded. The bit is reset to the init. value by resetting the event counter.

0 → 1	event counter exceeded
1 → 0	event counter exceeded again

10.7.4 Class 106 - Activation

This class defines the control signals for activating the BCL 558*i* as well as the signals for the control of the result output. It is possible to select between standard data output operation and handshake operation.

In handshake operation, the controller must acknowledge the data reception via the ACK bit before the new data is written into the input area. After acknowledging the last result, the input data is reset (filled with zeros).

Object class 106 = 0x6A

Services:

- Get attribute single 0x0E
- Set attribute single 0x10

Path			Designation	Size in bit	Data type	Default (dec)	Min (dec)	Max (dec)	Access
Cl.	Inst.	Attr.							
106	1	1	Mode 1)	8	U8	0	0	1	Set
		2	Number of results	8	U8	0	0	255	Get
		3	Activation signal	8	U8	0	0	1	Set
		4	Data acknowl-edgement	8	U8	0	0	1	Set
		5	Data reset	8	U8	0	0	1	Set

1) This attribute is a parameter. The value of the parameter can be set via the configuration assembly.

Mode

The parameter defines the mode in which the communication is operated.

0 without ACK
1 with ACK

Number of results

This value specifies how many messages are ready to be picked up in the BCL 558*i*.

Activation signal

Signal for activating the BCL 558*i*. This action opens or closes the reading gate of the BCL 558*i*. This attribute is edge-triggered, not level-controlled.

0 → 1 activation (open reading gate)
1 → 0 deactivation (close reading gate)

Data acknowledgement

This control bit signals that the transmitted data have been processed by the master. Only relevant with handshake mode (with ACK), see **Mode**.

0 → 1 data has been processed by the master
1 → 0 data has been processed by the master

Data reset

Deletes results that may have been stored and resets the input data.

0 → 1 data reset

If the data reset control bit is activated, the following actions are carried out:

1. Deletion of results that may still be stored.
2. Resetting of the attributes of **Class 107 - Result data**

10.7.5 Class 107 - Result data

Notice!

The result is the data from the BCL 558i to the control.

This class defines the transfer of result data. The result data comes from the Formatter currently selected. This can be selected and configured in WebConfig. This class also defines the output of fragmented results. To occupy few I/O data, the results may be split into several fragments with this class. The fragments can then be transmitted one after another with a handshake.

Object class 107 = 0x6B

Services:

- Get attribute single 0x0E
- Set attribute single 0x10

Path			Designation	Size in bit	Data type	Default (dec)	Min (dec)	Max (dec)	Access
Cl.	Inst.	Attr.							
107	**1**	**1**	Activation status	8	U8	0	0	1	Get
		2	User data or command	8	U8	0	0	1	Get
		3	Further results in the buffer	8	U8	0	0	1	Get
		4	Buffer overflow	8	U8	0	0	1	Get
		5	New result (toggle bit)	8	U8	0	0	1	Get
		6	Waiting for acknowledgement	8	U8	0	0	1	Get
		7	Result data length	16	U16	0	0	65.535	Get
		8	Data	2048	U8 [256]	0	0	255	Get
		9	Activate result fragmentation 1)	8	U8	0	0	1	Set
		10	Fragment number	8	U8	0	0	255	Get
		11	Remaining fragments	8	U8	0	0	255	Get
		12	Fragment size	8	U8	32	0	255	Get

1) This attribute is a parameter. The value of the parameter can be set via the configuration assembly.

Activation status

Displays the current activation status.

0 deactivated
1 activated

User data or command

Distinction between result from the Formatter and answer from the command interpreter. Makes the distinction easy for the user.

0 user data
1 answer from the command interpreter

Further results in the buffer

This signal indicates whether further results are in the buffer.

0 no
1 yes

Buffer overflow

This signal indicates that all result buffers are occupied and that BCL 558*i* rejects data.

0 no
1 yes

New result (toggle bit)

The toggle bit indicates whether a new result is present.

0 → 1 new result
1 → 0 new result

Waiting for acknowledgement

This signal represents the internal state of the control.

0 base state
1 control waiting for acknowledgement from the master

Result data length

Data length of the actual result information. If the result information fits the selected assembly length, this value reflects the length of the transferred data. A value larger than the assembly length indicates a loss of information caused by an assembly length which has been selected to be too small.

Data

Result information with a length of maximum 256 bytes.

Activate result fragmentation

This attribute specifies whether the messages from the BCL 558*i* to the control should be transferred in fragments.

0 fragmentation inactive
1 fragmentation active

Fragment number

Current fragment number.

Remaining fragments

Number of fragments which still have to be read for a complete result.

Fragment size

Fragment size always corresponds to the configured fragment length, except for the last fragment.

10.7.6 Class 108 - Entry data

Notice!

The entry is the data from the control to the BCL 558i.

This class defines the transfer of entry data to a command interpreter in the BCL 558*i*. This class also defines the transfer of fragmented entry data.

To occupy few I/O data, the entry data may be split into several fragments with this class. The fragments can then be transmitted one after another with a handshake.

Object class 108 = 0x6C

Services:

- Get attribute single 0x0E
- Set attribute single 0x10

Path			Designation	Size in bit	Data type	Default (dec)	Min (dec)	Max (dec)	Access
Cl.	Inst.	Attr.							
108	1	1	Data acceptance (toggle bit)	8	U8	0	0	1	Get
		2	Data rejection (toggle bit)	8	U8	0	0	1	Get
		3	Error code	8	U8	0	0	8	Get
		5	New entry (toggle bit)	8	U8	0	0	1	Set
		6	Entry data length	16	U16	0	0	65.535	Set
		7	Data	2048	U8 [256]	0	0	255	Set
		8	Activate entry fragmentation 1)	8	U8	0	0	1	Set
		9	Fragment number	8	U8	0	0	255	Set
		10	Remaining fragments	8	U8	0	0	255	Set
		11	Fragment size	8	U8	0	0	255	Set

1) This attribute is a parameter. The value of the parameter can be set via the configuration assembly.

Data acceptance (toggle bit)

The signal shows that the BCL 558*i* has accepted the data or the data fragment (also see **Data rejection** toggle bit).

0 → 1 data have been accepted
1 → 0 data have been accepted

Data rejection (toggle bit)

The BCL 558*i* has rejected the acceptance of the data or the data fragment (also see **Data acceptance** toggle bit).

0 → 1 data have been rejected
1 → 0 data have been rejected

Error code

Cause of error if a message is rejected.

- **0** no error
- **1** receive buffer overflow
- **2** sequence error, i.e. an error was detected with the fragment number transferred from the control, the number of remaining fragments or the fragment size.

Notice!

*The following sequence diagram shows with examples how the **Data acceptance**, **Data rejection** and **Error code** attributes are connected.*

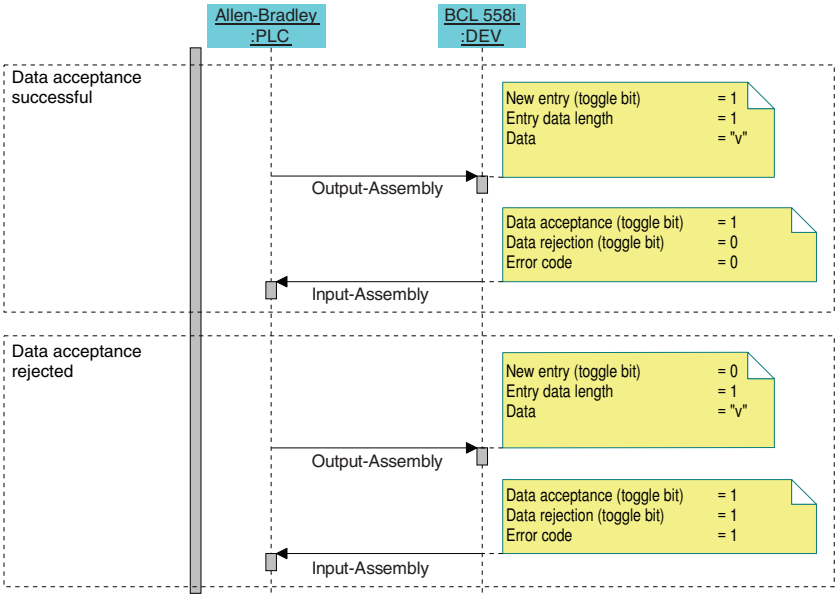

Figure 10.5: Connection between Data acceptance/Data rejection/Error code attributes

New entry (toggle bit)

The toggle bit shows whether new entry data are present.

- **0 → 1** new result
- **1 → 0** new result

Entry data length

Data length of the actual information.

Data

Information with a length of maximum 256 bytes.

Activate entry fragmentation

This attribute specifies whether the messages from the control to the BCL 558*i* should be transferred in fragments.

0 fragmentation inactive
1 fragmentation active

Fragment number

Current fragment number.

Remaining fragments

Number of fragments which still have to be transmitted for a complete entry.

Fragment size

The fragment size should always be identical, except for the last fragment to be transferred. A fragment size of 0 means that the fragmentation is not used.

10.7.7 Class 109 - Device status and device control

This class contains the display of the device status as well as control bits for deleting an error or putting the BCL 558*i* into standby mode.

Object class 109 = 0x6D

Services:

- Get attribute single 0x0E
- Set attribute single 0x10

Path			Designation	Size in bit	Data type	Default (dec)	Min (dec)	Max (dec)	Access
Cl.	Inst.	Attr.							
109	**1**	**1**	Device status	8	U8	15	0	129	Get
		2	Error acknowledge	8	U8	0	0	1	Set
		3	Standby	8	U8	0	0	1	Set

Device status

This byte represents the device status:

10 standby
15 device is ready
128 error
129 warning

Error acknowledge

This control bit confirms and deletes errors or warnings that may be present in the system. It acts like a toggle bit.

0 → 1 error acknowledge
1 → 0 error acknowledge

StandBy

Activates the standby function.

0 standby off
1 standby on

10.8 Configuration example

In the following sections, various examples show how the profile previously described can be used to solve different scenarios.

The following scenarios are illustrated with examples:

- **Example 1** - activation & result
  In: 33 bytes
  Out: 1 byte
  Config: 0 bytes
- **Example 2** - activation & result & I/Os
  In: 21 bytes
  Out: 2 bytes
  Config: 0 bytes
- **Example 3** - activation & fragmented result
  In: 13 bytes
  Out: 1 byte
  Config: 3 bytes
- **Example 4** - entry data & result
  In: 33 bytes
  Out: 10 bytes
  Config: 0 bytes

10.8.1 Example 1 - activation & result

The following screenshot shows the configuration of the device in the **RSLogix 5000** control software.

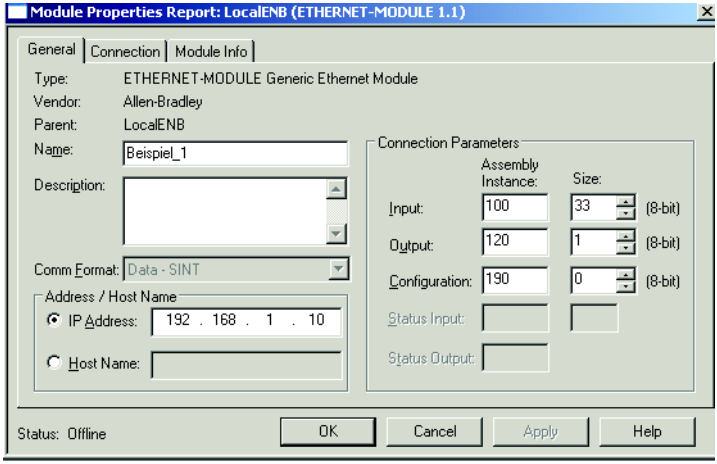

Figure 10.6: Configuration of example 1 - module definition with generic module

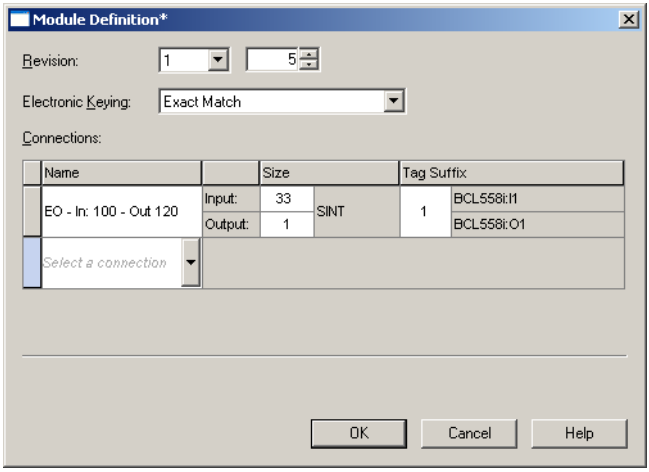

Figure 10.7: Configuration of example 1 - module definition with the EDS file

Structure of input assembly 100

Inst.	Byte	Bit 7	Bit 6	Bit 5	Bit 4	Bit 3	Bit 2	Bit 1	Bit 0
100	0	Device status							
	1	Number of results							
	2	Reserved		Waiting for acknowl-edgement	New result (toggle bit)	Buffer overflow	Further results in the buffer	User data or command	Status activation
	3	Result data length (low byte)							
	4	Result data length (high byte)							
	5	Data byte 0							
	6	Data byte 1							
	…	…							
	32	Data byte 27							

Structure of output assembly 120

Inst.	Byte	Bit 7	Bit 6	Bit 5	Bit 4	Bit 3	Bit 2	Bit 1	Bit 0
120	0	Reserved			Standby	Error acknowledge	Data reset	Data acknowl-edgement	Activation signal

Structure of configuration assembly 190

Since the configuration is not used, the length of the configuration assembly is specified as 0. The device then operates with the default values. In this case, the acknowledge mode is not used.

Below, examples of what data exchange looks like during two subsequent activations are shown.

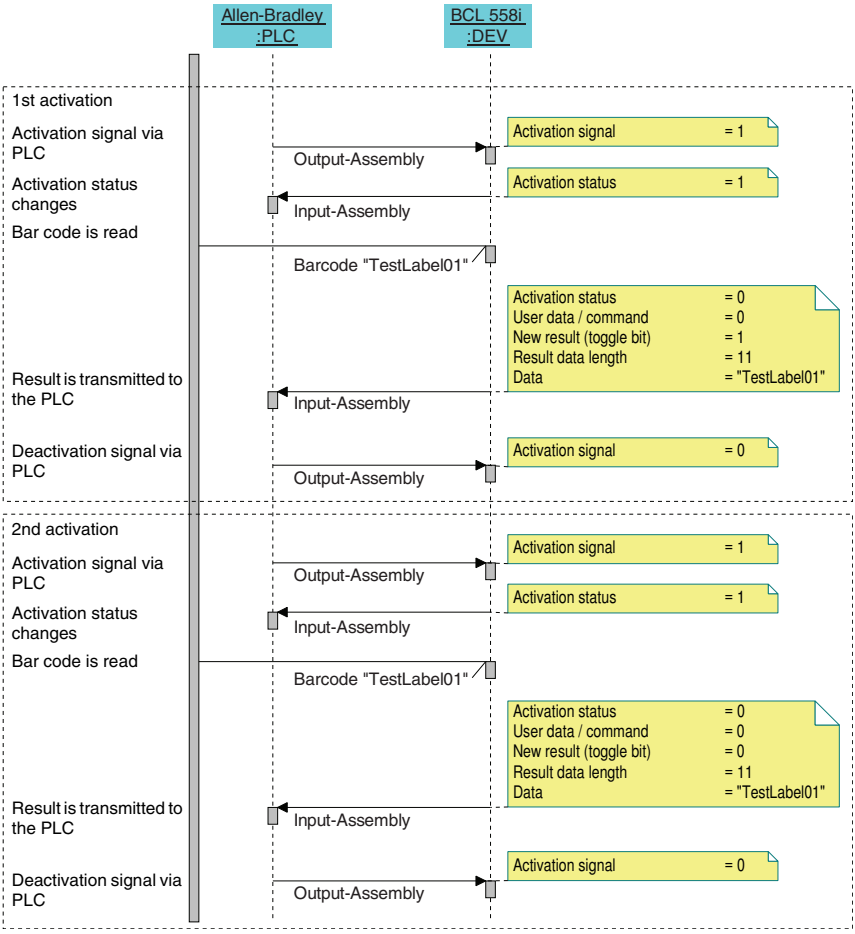

Figure 10.8: Data exchange sequence diagram - example 1

10.8.2 Example 2 - activation & result & I/Os

The following screenshot shows the configuration of the device in the **RSLogix 5000** control software.

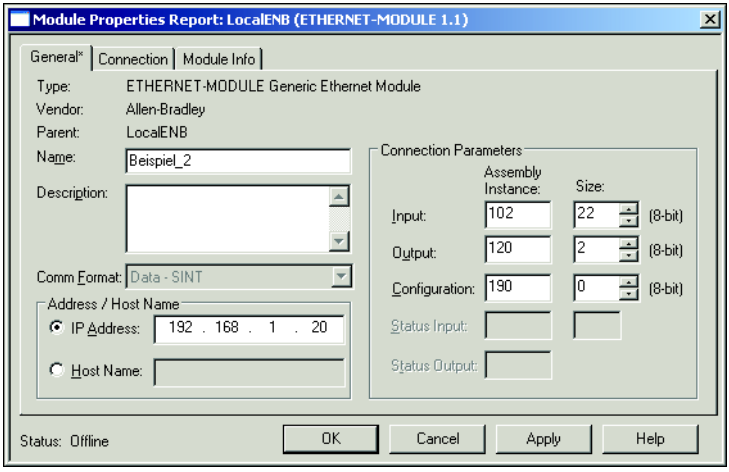

Figure 10.9: Configuration of example 2 - module definition with generic module

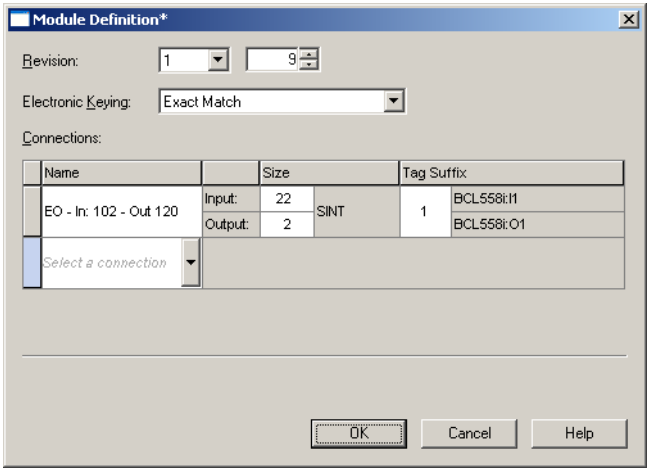

Figure 10.10: Configuration of example 2 - module definition with the EDS file

Structure of input assembly 102

Inst.	Byte	Bit 7	Bit 6	Bit 5	Bit 4	Bit 3	Bit 2	Bit 1	Bit 0
102	0	Device status							
	1	Reserved	Switching output comparison state **2** (toggle bit)	Switching output comparison state **2**	Status input/output I/O **2**	Reserved	Switching output comparison state **1** (toggle bit)	Switching output comparison state **1**	Status input/output I/O **1**
	2	Reserved	Switching output comparison state **4** (toggle bit)	Switching output comparison state **4**	Status input/output I/O **4**	Reserved	Switching output comparison state **3** (toggle bit)	Switching output comparison state **3**	Status input/output I/O **3**
	3	Reserved	Error code			Reserved		Data rejection (toggle bit)	Data acceptance (toggle bit)
	4	Fragment number (see chapter 10.7.5 "Class 107 - Result data")							
	5	Remaining fragments (see chapter 10.7.5 "Class 107 - Result data")							
	6	Fragment size (see chapter 10.7.5 "Class 107 - Result data")							
	7	Number of results							
	8	Reserved		Waiting for acknowledgement	New result (toggle bit)	Buffer overflow	Further results in the buffer	User data or command	Status activation
	9	Result data length (low byte)							
	10	Result data length (high byte)							
	11	Data byte 0							
	12	Data byte 1							
	…	…							
	21	Data byte 10							

Structure of output assembly 120

Inst.	Byte	Bit 7	Bit 6	Bit 5	Bit 4	Bit 3	Bit 2	Bit 1	Bit 0
120	0	Reserved			Standby	Error acknowledge	Data reset	Data acknowledgement	Activation signal
	1	Reset event counter **4**	Activation switching output **4** 1)	Reset event counter **3**	Activation switching output **3** 1)	Reset event counter **2**	Activation switching output **2** 1)	Reset event counter **1**	Activation switching output **1** 1)

1) To be able to use the **Activation switching output** function, the output function must be set to **External event** in webConfig.

Structure of configuration assembly 190

Since the configuration is not used, the length of the configuration assembly is specified as 0. The device then operates with the default values. In this case, the acknowledge mode is not used.

Below, examples of what data exchange looks like during two subsequent activations are shown. Switching output 1 reflects the activation signal. Switching output 2 displays whether the result is valid (status input/output I/O 2 = 1] or whether a NoRead has taken place (status input/output
I/O 2 = 0).

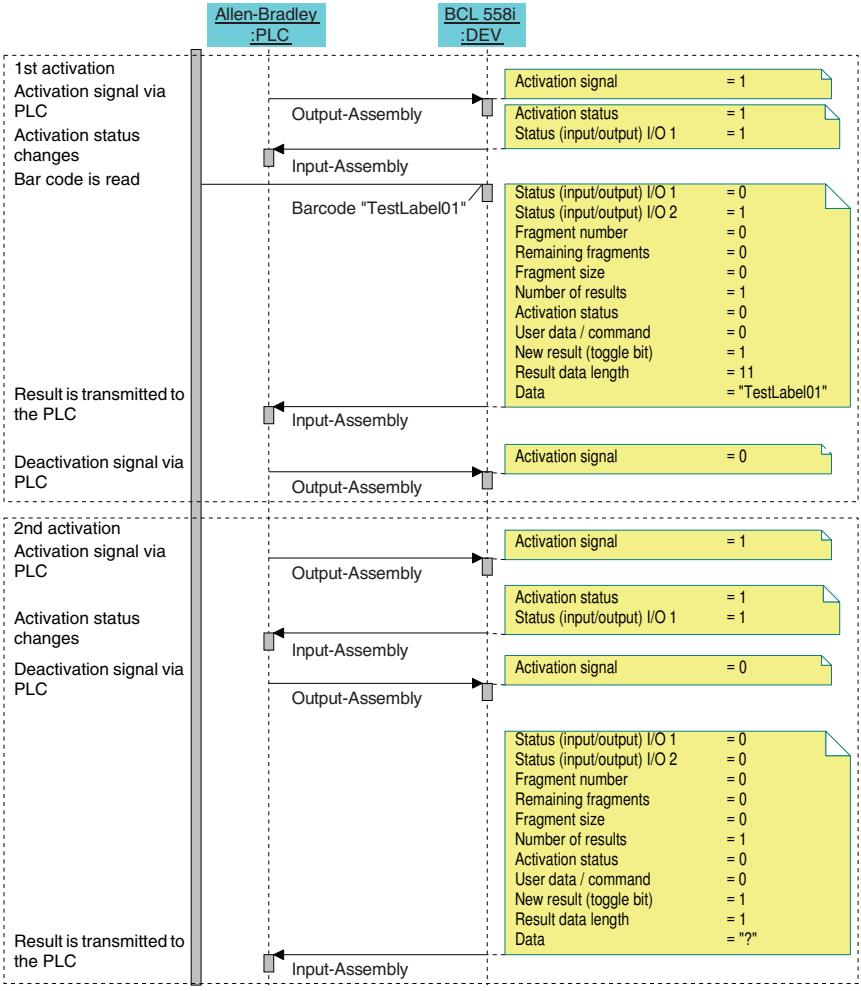

Figure 10.11: Data exchange sequence diagram - example 2

10.8.3 Example 3 - activation & fragmented result

The following screenshot shows the configuration of the device in the **RSLogix 5000** control software.

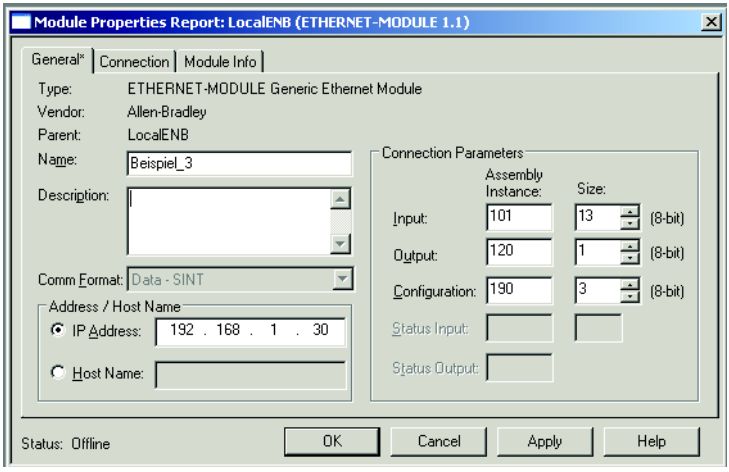

Figure 10.12: Configuration of example 3 - module definition with generic module

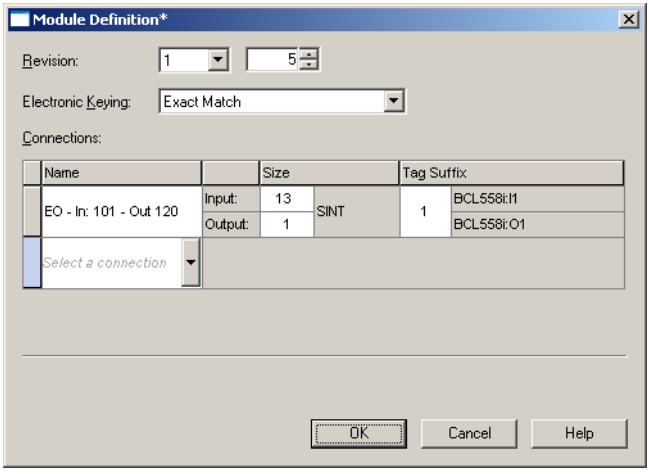

Figure 10.13: Configuration of example 3 - module definition with the EDS file

Structure of input assembly 101

Inst.	Byte	Bit 7	Bit 6	Bit 5	Bit 4	Bit 3	Bit 2	Bit 1	Bit 0
101	0	Device status							
	1	Reserved	Error code			Reserved		Data rejection (toggle bit)	Data acceptance (toggle bit)
	2	Fragment number (see chapter 10.7.5 "Class 107 - Result data")							
	3	Remaining fragments (see chapter 10.7.5 "Class 107 - Result data")							
	4	Fragment size (see chapter 10.7.5 "Class 107 - Result data")							
	5	Number of results							
	6	Reserved		Waiting for acknowl-edgement	New result (toggle bit)	Buffer overflow	Further results in the buffer	User data or command	Status activation
	7	Result data length (low byte)							
	8	Result data length (high byte)							
	9	Data byte 0							
	10	Data byte 1							
	11	Data byte 2							
	12	Data byte 3							

Structure of output assembly 120

Inst.	Byte	Bit 7	Bit 6	Bit 5	Bit 4	Bit 3	Bit 2	Bit 1	Bit 0
120	0	Reserved			Standby	Error acknowledge	Data reset	Data acknowl-edgement	Activation signal

Structure of configuration assembly 190

Byte	Cross reference address	Bit assignment (default)								Default
		7	6	5	4	3	2	1	0	
0	106 / 1 / 1	–	–	–	–	–	–	–	1	0x00
1	107 / 1 / 9	–	–	–	–	–	–	–	1	0x00
2	108 / 1 / 8	–	–	–	–	–	–	–	0	0x00

Notice!

Bit 0 *in the* 106 *and* 107 *assemblies must be set for fragmented sending and receiving!*

Below, examples of what data exchange looks like when the result is transferred in fragments are shown.

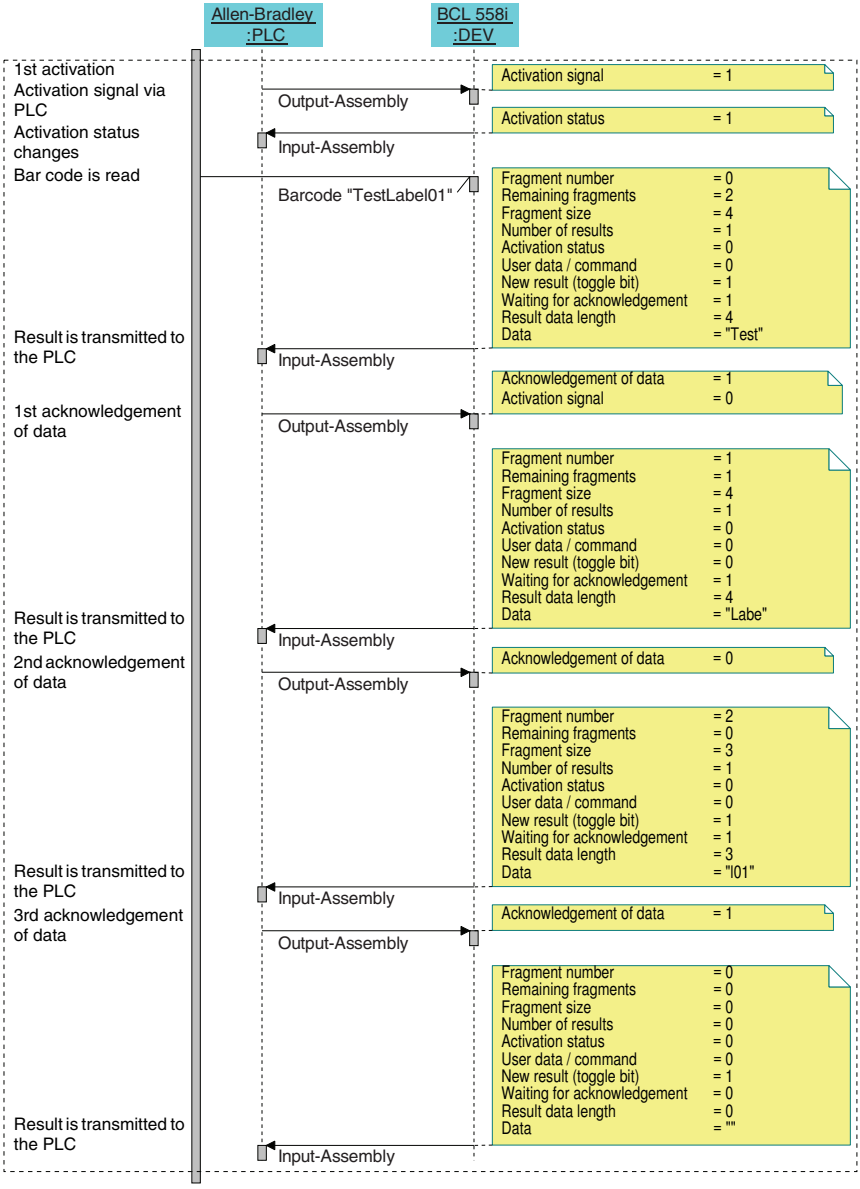

Figure 10.14: Data exchange sequence diagram - example 3

10.8.4 Example 4 - entry data & result

The following screenshot shows the configuration of the device in the **RSLogix 5000** control software.

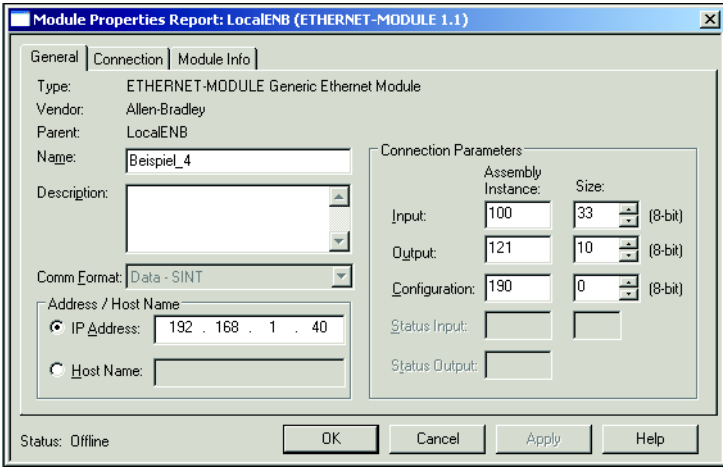

Figure 10.15: Configuration of example 4 - module definition with generic module

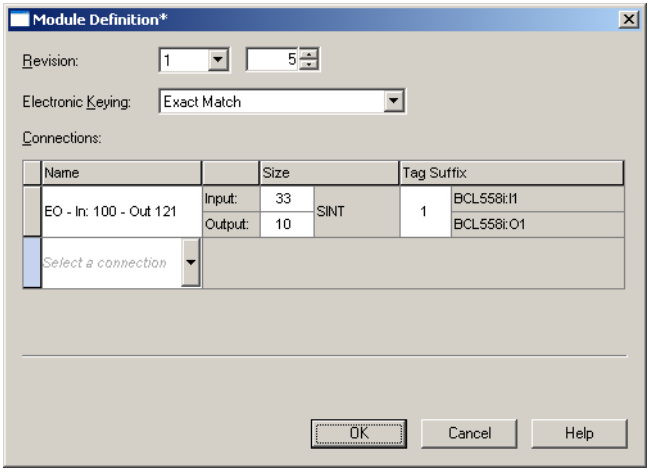

Figure 10.16: Configuration of example 4 - module definition with the EDS file

Structure of input assembly 100

Inst.	Byte	Bit 7	Bit 6	Bit 5	Bit 4	Bit 3	Bit 2	Bit 1	Bit 0
100	0	Device status							
	1	Number of results							
	2	Reserved		Waiting for acknowl-edgement	New result (toggle bit)	Buffer overflow	Further results in the buffer	User data or command	Status activation
	3	Result data length (low byte)							
	4	Result data length (high byte)							
	5	Data byte 0							
	6	Data byte 1							
	…	…							
	32	Data byte 27							

Structure of output assembly 121

Inst.	Byte	Bit 7	Bit 6	Bit 5	Bit 4	Bit 3	Bit 2	Bit 1	Bit 0
121	0	Reserved			Standby	Error acknowledge	Data reset	Data acknowl-edgement	Activation signal
	1	Fragment number (see chapter 10.7.6 "Class 108 - Entry data")							
	2	Remaining fragments (see chapter 10.7.6 "Class 108 - Entry data")							
	3	Fragment size (see chapter 10.7.6 "Class 108 - Entry data")							
	4	Reserved						New entry (toggle bit)	New data
	5	Entry data length (low byte)							
	6	Entry data length (high byte)							
	7	Data byte 0							
	8	Data byte 1							
	9	Data byte 2							

Structure of configuration assembly 190

Since the configuration is not used, the length of the configuration assembly is specified as 0. The device then operates with the default values. In this case, the acknowledge mode is not used.

Below, examples of what data exchange looks like when the entry function is used are shown.

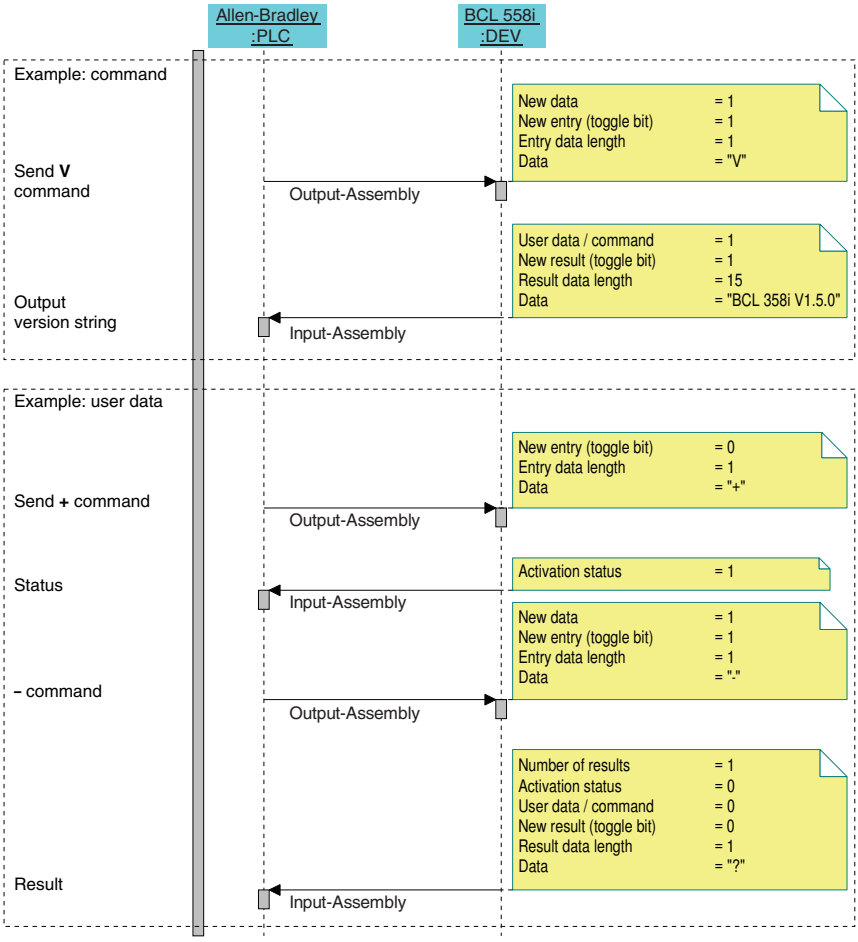

Figure 10.17: Data exchange sequence diagram - example 4

10.9 Additional settings for the BCL 558*i*

After the basic configuration of the operating mode and the communication parameters, you need to carry out further settings:

- Decoding and processing the read data
- Control of the decoding
- Control of the switching outputs

10.9.1 Decoding and processing the read data

The BCL 558*i* offers the following options:

- Setting the number of labels to be decoded for each reading gate (0 … 64). This is done via the `Max. no. of labels` parameter.
- Definition of up to 8 different code types (4 different types if configured via the display). Labels that match one of the defined code types are decoded. Further parameters can be set for each code type:
  - The code type (`symbology`)
  - The `Number of digits`: either up to 5 different numbers of digits (e.g., 10, 12, 16, 20, 24), or a range (`Interval mode`) and up to three additional numbers of digits (e.g., 2 … 10, 12, 16, 26)
  - The `Reading reliability`: the set value specifies how many times a label must be read and decoded with the same result before the result is accepted as valid.
  - Activation of the code fragment technology (`CRT`, in the webConfig tool only)
  - Additional code type specific settings (in the webConfig tool only)
  - `Check digit method` used for decoding as well as the type of `Check digit output` for the read result. The two possibilities for the latter are `Standard` (corresponds to the standard for the selected code type/symbology) and not `Standard`.

↳ *Define at least one code type with the desired settings.*

- via webConfig:
  `Configuration -> Decoder`
- or, alternatively, via the display
  `Parameter -> Decoder table`

Data processing via the webConfig tool

In the Data and Output submenus of the Configuration main menu, the webConfig tool provides extensive data processing options to adapt the functionality of the BCL 558*i* to the specific reading task:

- Data filtering and segmentation in the Data submenu:
  - Data filtering according to characteristics for handling identical bar code information
  - Data segmentation for differentiating between identifier and content of the read data
  - Data filtering according to content and/or identifier in order to suppress the output of bar codes with specific content/identifiers
  - Completeness inspection of the read data
- Sorting and formatting the output data in the Output submenu:
  - Configuration of up to 3 different sorting criteria. Sorting by physical data and content of the read bar codes
  - Formatting of the data output for the HOST
  - Formatting of the data output for the display

10.9.2 Control of the decoding

In general, decoding is controlled via one or more of the configurable switching inputs/outputs. For this purpose, the respective connection to the SW IN/OUT and POWER interfaces must be configured as a switching input.

Via a switching input, you can:

- start decoding
- stop decoding
- start decoding and then stop decoding after a configurable time period
- read a reference code
- start the automatic code type configuration (AutoConfig)

↳ *Connect the required control devices (photoelectric sensor, proximity switch, etc.) as described in chapter 7 to the BCL 558i.*

↳ *Configure the connected switching inputs according to your requirements. To do this, first set the I/O mode to Input and then configure the switching behavior:*

- via webConfig:
  Configuration -> Device -> Switching inputs/outputs
- or, alternatively, via the display
  Parameter -> Digital SWIO -> Switching input/output 1-4

Notice!

Alternatively, one can also activate decoding via the online command '+' and deactivate it via the online command '-'. Further information on the online commands can be found in chapter 11.

Advanced decoder control via the webConfig tool

The webConfig tool provides advanced functions, in particular for deactivating decoding. These may be accessed via the `Control` submenu of the `Configuration` main menu. You can:

- activate decoding automatically (delayed)
- stop decoding after a maximum reading gate time
- stop decoding via the completeness mode, if:
  - the maximum number of bar codes to be decoded has been decoded
  - a positive reference code comparison has taken place.

10.9.3 Control of the switching outputs

By using the switching inputs/outputs of the BCL 558*i*, external event-controlled functions can be implemented without assistance from the superior process control. For this purpose, the respective connection at the SW IN/OUT and POWER interfaces must be configured as a switching output.

A switching output can be activated:

- at the start/end of the reading gate
- depending on the read result:
  - reference code comparison positive/negative
  - read result valid/invalid
- depending on the state of the device:
  - ready/not ready
  - data transmission active/not active
  - active/standby
  - error/no error
- etc.

↳ *As described in chapter 7 of the manual, connect the required switching outputs.*

↳ *Configure the connected switching outputs according to your requirements. To do this, first set the I/O mode to Output and then configure the switching behavior:*

- via webConfig:
  `Configuration -> Device -> Switching inputs/outputs`
- or, alternatively, via the display
  `Parameter -> Digital SWIO -> Switching input/output 1-4`

10.10 Transmitting configuration data

Instead of going through the tedious task of configuring every parameter of the BCL 558*i* individually, you can also conveniently transfer configuration data.

In general, there are two possibilities for transferring configuration data between two BCL 558*i* bar code readers:

- Storage in a file and transfer using the webConfig tool
- Using the external parameter memory

10.10.1 Via the webConfig tool

With the webConfig tool, you can store entire configurations of the BCL 558*i* on data carriers and transfer them from these to the BCL 558*i*.

This storage of configuration data is especially useful if you want to store basic configurations which will require only minor changes.

In the webConfig tool, you store the configuration data via the buttons in the upper part of the middle window of all submenus of the `Configuration` main menu.

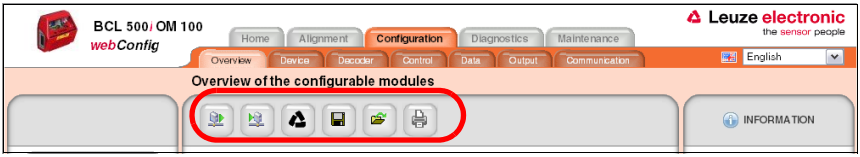

Figure 10.18: Storing configuration data in the webConfig tool

10.10.2 With the external parameter memory

The use of the external parameter memory permits the easy replacement of a defective BCL 558*i* on site.

This requires an external parameter memory to be installed permanently to the USB connection of the BCL 558*i*.

The BCL 558*i* stores a copy of the current configuration in the external parameter memory. This copy is immediately updated when the configuration is changed via the display or by a primary host system (PC/PLC) via online commands.

Installing the external parameter memory

Figure 10.19: Installing the external parameter memory

- *Remove the cover of the USB connection on the BCL 558i.*
- *Insert the USB memory stick into the USB connection and then cover it with the screw cap to ensure protection class IP 65.*

Figure 10.20: BCL 558*i* with installed parameter memory

The USB memory stick can be inserted regardless of whether or not the BCL 558*i* is connected to supply voltage.

```
Memory stick connected:
Export internal
configuration?
   OK
   cancel.
```

After the USB memory stick has been inserted and supply voltage applied, the message on the left appears on the display.

- *Use the arrow keys ▲▼ to select OK and then press the enter button ↵.*

The configuration is now transferred to the external parameter memory and is from now on updated immediately when the configuration is changed via display or online commands.

The display of MS under the Link state indicates that the USB memory stick is connected correctly and is functioning.

Replacing a defective BCL 558i

- *Uninstall the defective BCL 558i.*
- *Remove the screw cap of the USB connection of the defective BCL 558i and remove the external parameter memory.*
- *Mount the external parameter memory and the screw cap onto the new BCL 558i.*
- *Install and commission the new BCL 558i.*

The following message appears on the display again:

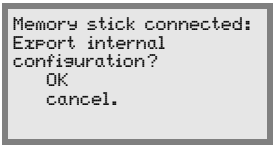

- *Use the arrow keys ▲ ▼ to select Cancel and then press the enter button ↵.*

Attention!

Make sure you select Cancel. Otherwise, the configuration in the external parameter memory is lost!

The configuration is now imported from the external parameter memory and the BCL 558i is immediately operational without any further configuration.

11 Online commands

11.1 Overview of commands and parameters

Online commands can be used to send commands directly to the device for control and configuration.

For this purpose, the BCL 558*i* must be connected to a host- or service computer via the interface. The commands described can be sent either via the host or the service interface.

Online commands

With the commands, you can:

- control/decode.
- read/write/copy parameters.
- carry out an automatic configuration.
- teach-in/set reference codes.
- call up error messages.
- call up statistical device information.
- carry out a software reset in order to reinitialize the device.

Syntax

"Online" commands consist of one or two ASCII characters followed by command parameters.

No separation characters may be entered between the command and the command parameter(s). Both small and capitalized letters can be used.

Example:

Command **'CA'**: autoConfig function

Parameter **'+'**: Activation

Transmitted is: **'CA+'**

Notation

Commands, command parameters and returned data are enclosed between single quotation marks ' ' in the text of this manual.

Most online commands are acknowledged by the BCL 558*i* and any requested data returned. For commands that are not acknowledged, command execution can be observed or monitored directly on the device.

11.1.1 General 'online' commands

Software version number

Command	’V’
Description	Requests device version information
Parameter	No
Acknowledgment	**'BCL 558i SM 100 V 1.2.3 2013-05-15'** The first line contains the device type of the BCL 558*i*, followed by the device version number and version date. (The data which is actually displayed may vary from the values given here)

Notice!

This command returns the major release number of the software packet. This major release number also appears on the display during start-up.
This command can be used to check whether the connected host or service computer is properly connected and configured. If you do not receive an acknowledgement, please check interface connections, protocol and service switches.

Software reset

Command	’H’
Description	Carries out a software reset. The device is restarted and reinit.ialized, leaving it in the same state as when the supply voltage is switched on.
Parameter	No
Acknowledgment	**’S’** (start signal)

Code recognition

Command	'CC'
Description	Detects an unknown bar code and outputs number of digits, code type, and code information to the interface, without storing the bar code in the parameter memory.
Parameter	No
Acknowledgment	**'xx yy zzzzzz'** **xx**: No. of digits of the read code **yy**: Code type of the read code **'01'** 2/5 Interleaved **'02'** Code 39 **'03'** Code 32 **'06'** UPC (A, E) **'07'** EAN **'08'** Code 128, EAN 128 **'10'** EAN Addendum **'11'** Codabar **'12'** Code 93 **'13'** GS 1 Databar Omnidirectional **'14'** GS 1 Databar Limited **'15'** GS 1 Databar Expanded **zzzzzz**: Contents of the decoded label. A ↑ appears if the label was not correctly read.

autoConfig

Command	'CA'
Description	Activates or deactivates the 'autoConfig' function. BCL 558*i*Certain label reading parameters are programmed automatically in the setup by the labels which are read while the 'autoConfig' function is active.
Parameter	**'+'** Activates 'autoConfig' **'/'** Rejects the last code read **'-'** Deactivates 'autoConfig' and stores the decoded data in the current parameter set
Acknowledgment	**'CSx'** **x** Status **'0'** Valid **'CA'** command **'1'** Invalid command **'2'** autoConfig could not be activated **'3'** autoConfig could not be deactivated **'4'** Result could not be deleted
Description	**'xx yy zzzzzz'** **xx** No. of digits of the read code **yy** Code type of the read code **'01'** 2/5 Interleaved **'02'** Code 39 **'03'** Code 32 **'06'** UPC (A, E) **'07'** EAN **'08'** Code 128, EAN 128 **'10'** EAN Addendum **'11'** Codabar **'12'** Code 93 **'13'** GS 1 Databar Omnidirectional **'14'** GS 1 Databar Limited **'15'** GS 1 Databar Expanded **zzzzzz**: Contents of the decoded label. A ↑ appears if the label was not correctly read.

Alignment mode

Command	'JP'
Description	This command simplifies mounting and alignment of the BCL 558*i*. After activating the function with **'JP+'**, the BCL 558*i* continuously supplies status information to the serial interfaces. With this online command, the scanner is set to terminate the decoding after 100 successfully decoded labels and output the status information. Subsequently, the read process is reactivated automatically. In addition to the output of the status information, the laser beam is used to display the reading quality. Depending on how many read results could be extracted, the duration of the laser's "off" time increases. If the reading quality is high, the laser beam flashes in brief, regular intervals. The worse the decoder decodes, the longer the pauses become during which the laser is switched off. The flashing intervals become more and more irregular because the laser may, in total, be active for longer to extract more labels. The duration of the pauses has been stepped in such a way that they can be distinguished by the eye.
Parameter	**'+'**: Starts the adjustment mode. **'-'**: Ends the adjustment mode.
Acknowledgment	**'yyy_zzzzzz'** **yyy**: Reading quality in %. A high process availability is ensured at read qualities > 75%. **zzzzzz**: Bar code information.

Manual definition of the reference code

Command	RS
Description	This command can be used to define a new reference code in the BCL 558*i* by means of direct input via the serial interface. The data is saved in the parameter set according to your input under reference code 1 through 2 and stored in the working buffer for direct further processing.
Parameter	**'RSyvxxzzzzzzzz'** **y**, **v, x** and **z** are placeholders (variables) for the actual input. **y** Defined reference code no. **'1'** (Code 1) **'2'** (Code 2) **v** Storage location for reference code: **'0'** RAM+EEPROM, **'3'** RAM only **xx** Defined code type (see command 'CA') **z** Defined code information (1 … 63 characters)
Acknowledgment	**'RSx'** **x** Status **'0'** Valid '**Rx**' command **'1'** Invalid command **'2'** Insufficient memory for reference code **'3'** Reference code has not been saved **'4'** Reference code invalid
Example	Input = 'RS130678654331' (Code 1 (1), RAM only (3), UPC (06), code information)

Reference-code teach-in

Command	'RT'
Description	This command enables a reference code to be defined quickly by reading an example label.
Parameter	**'RTy'** **y** Function **'1'** Defines reference code 1 **'2'** Defines reference code 2 **'+'** Activates the definition of reference code 1 up to the value of Parameter no_of_labels **'-'** Exits the Teach-in process
Acknowledgment	The BCL 558*i* first responds with the command **'RS'** and corresponding status (see command 'RS'). After a bar code has been read, it sends the result in the following format: **'RCyvxxzzzzz'** **y**, **v**, **x** and **z** are placeholders (variables) for the actual input. **y** Defined reference code no. **'1'** (Code 1) **'2'** (Code 2) **v** Memory location for reference code **'0'** RAM+EEPROM, **'3'** RAM only **xx** Defined code type (see command 'CA') **z** Defined code information (1 … 63 characters)

Notice!

With this function, only code types are recognized that are identified using the autoConfig function or which were set in the setup.

↳ *After each reading via an 'RTy' command, explicitly switch off the function again since failure to do so will interfere with other commands as well as prevent execution of a new 'RTx' command.*

Reading a reference code

Command	'RR'
Description	The command reads out the reference code defined in the BCL 558*i*. If no parameters are specified, all defined codes are output.
Parameter	<Reference code number> **'1' … '2'** value range of reference codes 1 to 2
Acknowledgment	If no reference codes are defined, the BCL 558*i* responds with the **'RS'** command and corresponding status (see command 'RS')**.** For valid codes, the output corresponds to the following format: **RCyvxxzzzzzz** **y**, **v, x** and **z** are placeholders (variables) for the actual input. **y** Defined reference code no. **'1'** (Code 1) **'2'** (Code 2) **v** Memory location for reference code **'0'** RAM+EEPROM, **'3'** RAM only **xx** Defined code type (see command 'CA') **z** Defined code information (1 … 63 characters)

11.1.2 'Online' commands for system control

Activating sensor input

Command	'+'
Description	The command activates decoding. This command is used to activate the reading gate. It remains active until it is deactivated by one of the following criteria: • Deactivation by a manual command • Deactivation by a switching input • Deactivation upon reaching the specified read quality (equal scans) • Deactivation by timeout • Deactivation upon reaching a preset number of scans without information.
Parameter	No
Acknowledgment	None

Deactivating sensor input

Command	'-'
Description	The command deactivates decoding. This command can be used to deactivate the reading gate. Following deactivation, the read result is output. Because the reading gate was manually deactivated and, thus, no GoodRead criterion was met, a NoRead is output.
Parameter	No
Acknowledgment	None

System boot-up

Command	'SON'
Description	System boot-up: reactivates the BCL 558*i* from standby mode back to operating mode. The polygon wheel motor is started, the BCL 558*i* works as usual.
Parameter	No
Acknowledgment	**'S'** (start signal)

System Standby

Command	'SOS'
Description	System Standby: puts the BCL 558*i* in standby mode. The BCL 558*i* cannot be triggered, and the polygon wheel motor is stopped.
Parameter	No
Acknowledgment	None

11.1.3 ’Online’ commands for configuration of switching inputs/outputs

Activate switching output

Command	’OA’
Description	The switching outputs 1 - 4 can be activated with this command. The respective port must have been configured as a switching output. The logic state is output, i.e., an inverted logic is taken into account (e.g., inverted logic and a state of High corresponds to a voltage of 0V at the switching output).
Parameter	**’OA<a>’** <a> Selected switching output [1..4], unit [dimensionless]
Acknowledgment	None

Query the state of the switching outputs

Command	’OA’
Description	This command may be used to query the states of the switching inputs and outputs that are configured as a switching output and that have been set via commands. The logic state is output, i.e., an inverted logic is taken into account (e.g., inverted logic and a state of High corresponds to a voltage of 0V at the switching output).
Parameter	**’OA?’**
Acknowledgment	**’OA S1=<a>;S2=<a>[;S3=<a>][;S4=<a>]’** **<a>** State of the switching outputs **’0’** Low **’1’** High **’I’** Configuration as switching input **’P’** Passive configuration

Set the state of the switching outputs

Command	’OA’
Description	This command is used to set the states of the switching inputs/outputs that are configured as a switching output. The logic state is specified, i.e., an inverted logic is taken into account (e.g., inverted logic and a state of High corresponds to a voltage of 0V at the switching output). The values of the switching inputs/outputs that are not configured as switching outputs are ignored. You may also use only a selection of the existing switching inputs/outputs as long as these are listed in ascending order.
Parameter	**’OA [S1=<a>][;S2=<a>][;S3=<a>][;S4=<a>]’** **<a>** State of the switching output **’0’** Low **’1’** High
Acknowledgment	**’OA=<aa>’** **<aa>** Status acknowledgement, unit [dimensionless] **’00’** ok **’01’** Syntax error **’02’** Parameter error **’03’** Other error

Deactivate switching output

Command	’OD’
Description	The switching outputs 1 - 4 can be deactivated with this command. The respective port must have been configured as a switching output. The logic state is output, i.e., an inverted logic is taken into account (e.g., inverted logic and a state of High corresponds to a voltage of 0V at the switching output).
Parameter	**’OD<a>’** <a> Selected switching output [1..4], unit [dimensionless]
Acknowledgment	None

Query the configuration of the switching inputs/outputs

Command	'OF'
Description	This command may be used to query the configuration of the switching inputs/outputs 1 to 4.
Parameter	**'OF?'**
Acknowledgment	**'OF S1=<a>;S2=<a>[;S3=<a>][;S4=<a>]'** **<a>** Function of the switching input/ output, unit [dimensionless]' **'I'** Switching input **'O'** Switching output **'P'** Passive

Configure the switching inputs/ outputs

Command	'OF'
Description	This command may be used to configure the function of the switching inputs/outputs 1 to 4. You may also use only a selection of the existing switching inputs/outputs as long as these are listed in ascending order.
Parameter	**'OF [S1=<a>][;S2=<a>][;S3=<a>][;S4=<a>]'** **<a>** Function of the switching input/ output, unit [dimensionless]' **'I'** Switching input **'O'** Switching output **'P'** Passive
Acknowledgment	**'OF=<bb>'** **<bb>** Status acknowledgement **'00'** Ok **'01'** Syntax error **'02'** Parameter error **'03'** Other error

11.1.4 ’Online’ commands for the parameter set operations

Copying parameter set

Command	’PC’
Description	This command can only be used to copy parameter sets in their entirety. This can be used to replicate the three parameter sets **default**, **permanent** and **operating parameters** on the basis of one another. In addition, this command can also be used to restore the factory settings.
Parameter	**’PC<Source type><Target type>’** **<Source type>**Parameter data set which is to be copied, unit [dimensionless] **'0'** Parameter data set in permanent memory **'2'** Default or factory parameter set **'3'** Operating parameter data set in volatile memory **<Target type>**Parameter set to which the data is to be copied, unit [dimensionless] **'0'** Parameter data set in permanent memory **'3'** Operating parameter data set in volatile memory Permissible combinations here include: **'03'** Copying the data set from the permanent memory to the operating parameter data set **'30'** Copying the operating parameter data set to the permanent parameter set memory **'20'** Copying the default parameters to the permanent memory and to the main memory
Acknowledgment	**’PS=<aa>’** **<aa>** Status acknowledgement, unit [dimensionless] **’00’** Ok **’01’** Syntax error **’02’** Impermissible command length **’03’** Reserved **’04’** Reserved **’05’** Reserved **’06’** Impermissible combination, source type - target type

Requesting parameter data set from BCL 558i

Command	'PR'
Description	The parameters of the BCL 558*i* are grouped together in a parameter set and permanently stored in memory. There is one parameter set in permanent memory and one operating parameter set in volatile memory; in addition, there is a default parameter set (factory parameter set) for initialization. This command can be used to edit the first two parameter sets (in permanent and volatile memory). A check sum can be used for reliable parameter transfer.
Parameter	**'PR<BCC type><PS type><Address><Data length>[<BCC>]'** **<BCC type>** Check-digit function during transfer, unit [dimensionless] **'0'** Not used **'3'** BCC mode 3 **<PS type>** Memory from which the values are to be read, unit [dimensionless] **'0'** Parameter values stored in the flash memory **'1'** Reserved **'2'** Default values **'3'** Operating values in RAM **<Address>** Relative address of the data within the data set **'aaaa'** Four-digit, unit [dimensionless] **<Data length>** Length of the parameter data to be transferred **'bbbb'** Four-digit, unit [length in bytes] **<BCC>** Check sum calculated as specified under BCC type

Command	'PR'
Acknowledgment positive	**PT<BCC type><PS type><Status><Start> <Address parameter value><Address+1 parameter value>… [;<Address><Address parameter value>][<BCC>]** **<BCC type>** Check-digit function during transfer, unit [dimensionless] **'0'** Not used **'3'** BCC mode 3 **<PS type>** Memory from which the values are to be read, unit [dimensionless] **'0'** Parameter values stored in the flash memory **'2'** Default values **'3'** Operating values in RAM **<Status>** Mode of parameter processing, unit [dimensionless] **'0'** No further parameters **'1'** Additional parameters follow **<Start>** Relative address of the data within the data set, **'aaaa'** Four-digit, unit [dimensionless] **<P.value A.>** Parameter value of the parameter stored at this address; the parameter set data **'bb'** is converted from HEX format to a 2-byte ASCII-format for transfer. **<BCC>** Check sum calculated as specified under BCC type
Acknowledgment negative	**'PS=<aa>'** Parameter reply: **<aa>** Status acknowledgement, unit [dimensionless] **'01'** Syntax error **'02'** Impermissible command length **'03'** Impermissible value for checksum type **'04'** Invalid check sum received **'05'** Impermissible number of data requested **'06'** Requested data does not (any longer) fit in the transmission buffer **'07'** Impermissible address value **'08'** Read access after end of data set **'09'** Impermissible QPF data set type

Determining parameter set difference to default parameters

Command	'PD'
Description	This command outputs the difference between the default parameter set and the operating parameter set or the difference between the default parameter set and the permanent parameter set. **Comment**: The reply supplied by this command can e.g. be directly used for programming a device with factory settings, whereby this device receives the same configuration as the device on which the PD-sequence was executed.
Parameter	**'PD<P.set1><P.set2>'** **<P.set1>** Parameter data set which is to be copied, unit [dimensionless] **'0'** Parameter data set in permanent memory **'2'** Default or factory parameter set **<P.set2>** Parameter set to which the data is to be copied, unit [dimensionless] **'0'** Parameter data set in permanent memory **'3'** Operating parameter data set in volatile memory Permissible combinations here include: **'20'** Output of the parameter differences between the default and the permanently saved parameter set **'23'** Output of the parameter differences between the default parameter set and the operating parameter set saved in volatile memory **'03'** Output of the parameter differences between the permanent parameter set and the operating parameter set saved in volatile memory
Acknowledgment positive	**PT<BCC><PS type><Status><Adr.><P.value adr.><P.valueAdr.+1>…** **[;<Adr.><P.value adr.>]** **<BCC>** **'0'** No check digit **'3'** BCC mode 3 **<PS type>** **'0'** Values stored in flash memory **'3'** Operating values stored in RAM **<Status>** **'0'** No further parameters **'1'** Additional parameters follow **<Adr.>** Relative address of the data within the data set **'aaaa'** Four-digit, unit [dimensionless] **<P.value>** Parameter value of the -bb- parameter stored at this address. The parameter set data is converted from HEX format to a 2-byte-ASCII format for transfer.

Command	'PD'
Acknowledgment negative	**'PS=<aa>'** **<aa>** Status acknowledgement, unit [dimensionless] **'0'** No difference **'1'** Syntax error **'2'** Impermissible command length **'6'** Impermissible combination, parameter set 1 and parameter set 2 **'8'** Invalid parameter set

Writing parameter set

Command	'PT'
Description	The parameters of the BCL 558*i* are grouped together in a parameter set and permanently stored in memory. There is one parameter set in permanent memory and one operating parameter set in volatile memory; in addition, there is a default parameter set (factory parameter set) for initialization. This command can be used to edit the first two parameter sets (in permanent and volatile memory). A check sum can be used for reliable parameter transfer.
Parameter	**PT<BCC type><PS type><Status><Adr.><P.value adr.>** **<P.value adr+1>…[;<Adr.><P.value adr.>][<BCC>]** **<BCC type>** Check-digit function during transfer, unit [dimensionless] **'0'** No check digit **'3'** BCC mode 3 **<PS type>** Memory from which the values are to be read, unit [dimensionless] **'0'** Parameter values stored in the flash memory **'3'** Operating values stored in RAM **<Status>** Mode of parameter processing, without function here, unit [dimensionless] **'0'** No reset after parameter change, no further parameters **'1'** No reset after parameter change, additional parameters follow **'2'** With reset after parameter change, no further parameters **'6'** Set parameters to factory setting, no further parameters **'7'** Set parameters to factory settings, lock all code types; the code-type setting must follow in the command! **<Adr.>** Relative address of the data within the data set, **'aaaa'** Four-digit, unit [dimensionless] **<P.value>** Parameter value of the -bb- parameter stored at this address. The parameter set data is converted from HEX format to a 2-byte-ASCII format for transfer. **<BCC>** Check sum calculated as specified under BCC type

Command	'PT'
Acknowledgment	**'PS=<aa>'** Parameter reply: **<aa>** Status acknowledgement, unit [dimensionless] **'01'** Syntax error **'02'** Impermissible command length **'03'** Impermissible value for checksum type **'04'** Invalid check sum received **'05'** Impermissible data length **'06'** Invalid data (parameter limits violated) **'07'** Invalid start address **'08'** Invalid parameter set **'09'** Invalid parameter set type

12 Diagnostics and troubleshooting

12.1 General causes of errors

Error	Possible error cause	Measures
Status LED **PWR**		
Off	• No supply voltage connected to the device • Hardware error	• Check supply voltage • Send device to customer service
Red, flashing	• Warning	• Query diagnostic data and carry out the resulting measures
Red, continuous light	• Error: no function possible	• Internal device error, send in device
Orange, continuous light	• Device in service mode	• Reset service mode with webConfig tool
Status LED **NET**		
Off	• No supply voltage connected to the device • No IP address assigned • Hardware error	• Check supply voltage • IP address assigned • Send device to customer service
Red, flashing	• Communication error	• Check interface
Red, continuous light	• Double IP address	• Check network configuration

Table 12.1: General causes of errors

12.2 Interface errors

Error	Possible error cause	Measures
No communication via USB service interface	• Incorrect connection cable • Connected BCL 558*i* is not detected	• Check connection cable • Install USB driver
Sporadic errors at the Ethernet interface	• Incorrect wiring • Effects due to EMC • Overall network expansion exceeded	• Check wiring: - In particular, check wire shielding - Check the cable used • Check shielding (shield covering in place up to the clamping point) • Check grounding concept and connection to functional earth (FE) • Avoid EMC coupling caused by power cables laid parallel to device lines • Check max. network expansion as a function of the max. cable lengths

Table 12.2: Interface error

Notice!

*Please use **chapter 12 as a master copy** should servicing be required.*
Cross the items in the "Measures" column which you have already examined, fill out the following address field and fax the pages together with your service contract to the fax number listed below.

Customer data (please complete)

Device type:	
Company:	
Contact partner / department:	
Phone (direct):	
Fax:	
Street / No:	
ZIP code/City:	
Country:	

Leuze Service fax number:

+49 7021 573 - 199

13 Type overview and accessories

13.1 Type key

BCL 500*i* OM100H

Heating option	H =	With heating
Beam exit	0	Perpendicular
	2	Front
Optics	N	High Density (near)
	M	Medium Density (medium distance)
	F	Low Density (remote)
	L	Long Range (very large distances)
Scanning principle	S	Line scanner (single line)
	O	Oscillating-mirror scanner
	i =	Integrated fieldbus technology
Interface	00	RS 232/RS 422/RS 485 (multiNet Master)
	01	RS 485 (multiNet Slave)
	04	PROFIBUS DP
	08	Ethernet TCP/IP, UDP
	48	PROFINET-IO RT
	58	EtherNet/IP
	BCL	Bar code reader

Table 13.1: Type key

13.2 Type overview BCL 558*i*

BCL 558i family

(EtherNet/IP / 2x Ethernet on 2x M12 D-coded)

Type designation	Description	Part no.
High Density Optics (m = 0.25 … 0.5mm)		
BCL 558*i* SN 102	Line scanner, beam exit at the front	50122787
BCL 558*i* ON 100	Oscillating-mirror scanner	50122776
BCL 558*i* SN 102 H	Line scanner, beam exit at the front, with heating	50122788
BCL 558*i* ON 100 H	Oscillating-mirror scanner with heating	50122780
Medium Density Optics (m = 0.35 … 1.0mm)		
BCL 558*i* SM 102	Line scanner, beam exit at the front	50122785
BCL 558*i* OM 100	Oscillating-mirror scanner	50122773
BCL 558*i* SM 102 H	Line scanner, beam exit at the front, with heating	50122786
BCL 558*i* OM 100 H	Oscillating-mirror scanner with heating	50122775
Low Density Optics (m = 0.5 … 1.0mm)		
BCL 558*i* SF 102	Line scanner, beam exit at the front	50122781
BCL 558*i* OF 100	Oscillating-mirror scanner	50122769
BCL 558*i* SF 102 H	Line scanner, beam exit at the front, with heating	50122782
BCL 558*i* OF 100 H	Oscillating-mirror scanner with heating	50122770
Ultra Low Density Optics (m = 0.7 … 1.0mm)		
BCL 558*i* SL 102	Line scanner, beam exit at the front	50122783
BCL 558*i* OL 100	Oscillating-mirror scanner	50122771
BCL 558*i* SL 102 H	Line scanner, beam exit at the front, with heating	50122784
BCL 558*i* OL 100 H	Oscillating-mirror scanner with heating	50122772

Table 13.2: Type overview BCL 558*i*

Notice!

***Please note: the BCL 558i* line scanner with deflection mirror (perpendicular beam exit) is currently not available.**

13.3 Accessory connectors

Type designation	Description	Part no.
KD 095-5A	M12 socket for voltage supply	50020501
KS 095-4A	M12 connector for SW IN/OUT	50040155
S-M12A-ET	M12 connector for Ethernet, axial, 4-pin, D-coded	50112155
D-ET1	RJ45 connector for user-configuration	50108991
KDS ET M12 / RJ 45 W - 4P	Converter from M12 D-coded to RJ 45 socket	50109832

Table 13.3: Connectors for the BCL 558*i*

13.4 Accessory USB cable

Type designation	Description	Part no.
KB USB-Service	USB service cable	50107726

Table 13.4: Cable for the BCL 558*i*

13.5 Accessory external parameter memory

Type designation	Description	Part no.
USB Memory Set	External USB parameter memory	50108833

Table 13.5: External parameter memory for the BCL 558*i*

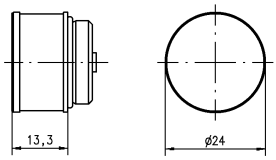

13.6 Accessory mounting device

Type designation	Description	Part no.
BT 56	Mounting device for rod	50027375
BT 59	Mounting device for ITEM	50111224

Table 13.6: Mounting devices for the BCL 558*i*

13.7 Accessory reflector for AutoReflAct

Type designation	Description	Part no.
Reflective tape no. 4 100 x 100mm	Reflective tape as reflector for AutoReflAct operation	50106119

Table 13.7: Reflector for the BCL 558*i*

13.8 Accessory ready-made cables for voltage supply

13.8.1 Contact assignment of PWR connection cable

PWR connection cable (5-pin socket, A-coded)			
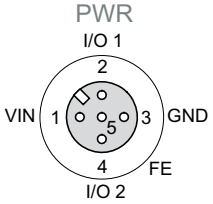 **M12 socket (A-coded)**	**Pin**	**Name**	**Core color**
	1	**VIN**	**brown**
	2	**I/O 1**	**white**
	3	**GND**	**blue**
	4	**I/O 2**	**black**
	5	**FE**	**gray**
	Thread	**FE**	**bare**

13.8.2 Specifications of the cables for voltage supply

Operating temperature range	in rest state:	-30°C … +70°C
	in motion:	5°C … +70°C
Material	sheathing:	PVC
Bending radius	> 50mm	

13.8.3 Order codes of the cables for voltage supply

Type designation	Description	Part no.
K-D M12A-5P-5m-PVC	M12 socket for PWR, axial connector, open cable end, cable length 5m	50104557
K-D M12A-5P-10m-PVC	M12 socket for PWR, axial connector, open cable end, cable length 10m	50104559

Table 13.8: PWR cables for the BCL 558*i*

13.9 Accessory ready-made cables for bus connection

13.9.1 General information

- Cable **KB ET…** for connecting to Industrial Ethernet via M12 connector
- Standard cable available in lengths from 2 … 30m
- Special cables on request.

13.9.2 Contact assignments M12 Ethernet connection cables KB ET…

M12 Ethernet connection cables (4-pin connector, D-coded, on both sides)

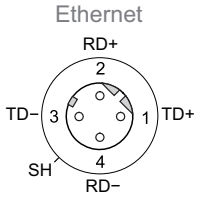

M12 plug (D-coded)

Pin	Name	Core color
1	TD+	yellow
2	RD+	white
3	TD-	orange
4	RD-	blue
SH (thread)	FE	bare

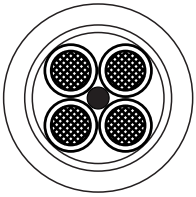

Wire colors

WH
YE
BU
OG

Conductor class: VDE 0295, EN 60228, IEC 60228 (Class 5)

Figure 13.1: Cable structure of Industrial Ethernet connection cable

13.9.3 Specifications of the M12 Ethernet connection cables KB ET…

Operating temperature range	in rest state: -50°C … +80°C in motion: -25°C … +80°C in motion: -25°C … +60°C (when used with drag chains)
Material	cable sheath: PUR (green), wire insulation: PE foam, free of halogens, silicone and PVC
Bending radius	> 65mm, suitable for drag chains
Bending cycles	> 10^6, perm. acceleration < $5 m/s^2$

13.9.4 Order codes for M12 Ethernet connection cables KB ET...

Type designation	Description	Part no.
M12 plug for BUS IN, axial connector, open cable end		
KB ET - 2000 - SA	Cable length 2m	50106739
KB ET - 5000 - SA	Cable length 5m	50106740
KB ET - 10000 - SA	Cable length 10m	50106741
KB ET - 15000 - SA	Cable length 15m	50106742
KB ET - 20000 - SA	Cable length 20m	50106743
KB ET - 30000 - SA	Cable length 30m	50106746
M12 plug for BUS IN to RJ-45 connector		
KB ET - 2000 - SA-RJ45	Cable length 2m	50109880
KB ET - 5000 - SA-RJ45	Cable length 5m	50109881
KB ET - 10000 - SA-RJ45	Cable length 10m	50109882
KB ET - 15000 - SA-RJ45	Cable length 15m	50109883
KB ET - 20000 - SA-RJ45	Cable length 20m	50109884
KB ET - 30000 - SA-RJ45	Cable length 30m	50109886
M12 plug + M12 plug for BUS OUT to BUS IN		
KB ET - 2000 - SSA	Cable length 2m	50106899
KB ET - 5000 - SSA	Cable length 5m	50106900
KB ET - 10000 - SSA	Cable length 10m	50106901
KB ET - 15000 - SSA	Cable length 15m	50106902
KB ET - 20000 - SSA	Cable length 20m	50106903
KB ET - 30000 - SSA	Cable length 30m	50106905

Table 13.9: Bus connection cables for the BCL 558*i*

14 Maintenance

14.1 General maintenance information

Usually, the bar code reader BCL 558*i* does not require any maintenance by the operator.

Cleaning

In the event of dust buildup, clean the BCL 558*i* with a soft cloth; use a cleaning agent (commercially available glass cleaner) if necessary.

Notice!

Do not use aggressive cleaning agents such as thinner or acetone for cleaning the device. Use of improper cleaning agents can damage the optical window.

14.2 Repairs, servicing

Repairs to the device must only be carried out by the manufacturer.

↳ *Contact your Leuze distributor or service organization should repairs be required. The addresses can be found on the inside of the cover and on the back.*

Notice!

When sending devices to Leuze electronic for repair, please provide an accurate description of the error.

14.3 Disassembling, packing, disposing

Repacking

For later reuse, the device is to be packed so that it is protected.

Notice!

Electrical scrap is a special waste product! Observe the locally applicable regulations regarding disposal of the product.

15 Appendix

15.1 Declaration of conformity

Leuze electronic

the sensor people

EG-KONFORMITÄTS-ERKLÄRUNG	EC DECLARATION OF CONFORMITY	DECLARATION CE DE CONFORMITE
Der Hersteller	The Manufacturer	Le constructeur
	Leuze electronic GmbH + Co. KG **In der Braike 1, PO Box 1111** **73277 Owen, Germany**	
erklärt, dass die nachfolgend aufgeführten Produkte den einschlägigen Anforderungen der genannten EG-Richtlinien entsprechen.	declares that the following listed products fulfil the relevant provisions of the mentioned EC Directives.	déclare que les produits identifiés suivants sont conformes aux directives CE mentionnées.
Produktbeschreibung:	Description of product:	Description de produit:
Barcodeleser **BCL 5xxi...**	**Barcode Reader** **BCL 5xxi...**	**Lecteures de Code á Barres** **BCL 5xxi...**
Angewandte EG-Richtlinie(n):	Applied EC Directive(s):	Directive(s) CE appliquées:
2004/108/EG **2006/95/EG**	**2004/108/EC** **2006/95/EC**	**2004/108/CE** **2006/95/CE**
Angewandte Normen:	Applied standards:	Normes appliquées:
EN 61000-6-2: 2005 **EN 60825-1: 2007**		**EN 61000-6-4: 2007 + A11: 2011**

4.10.12
Datum / Date / Date

Dr. Harald Grübel, Geschäftsführer / Director / Directeur

Leuze electronic GmbH + Co. KG
In der Braike 1
D-73277 Owen
Telefon +49 (0) 7021 573-0
Telefax +49 (0) 7021 573-199
info@leuze.de
www.leuze.com

LEO-ZQM-148-02-FO

Leuze electronic GmbH + Co. KG, Sitz Owen, Registergericht Stuttgart, HRA 230712
Persönlich haftende Gesellschafterin Leuze electronic Geschäftsführungs-GmbH, Sitz Owen, Registergericht Stuttgart, HRB 230550
Geschäftsführer: Dr. Harald Grübel (Vorsitzender), Dr. Matthias Kirchherr
USt.-IdNr: DE 145912521 | Zollnummer 2554232

Es gelten ausschließlich unsere aktuellen Verkaufs- und Lieferbedingungen
Only our current Terms and Conditions of Sale and Delivery shall apply

15.2 ASCII character set

ASCII	Dec.	Hex.	Oct.	Designation	Meaning
NUL	0	00	0	NULL	Null
SOH	1	01	1	START OF HEADING	Start of heading
STX	2	02	2	START OF TEXT	Start of text characters
ETX	3	03	3	END OF TEXT	Last character of text
EOT	4	04	4	END OF TRANSMISS.	End of transmission
ENQ	5	05	5	ENQUIRY	Request for data trans.
ACK	6	06	6	ACKNOWLEDGE	Positive acknowledgement
BEL	7	07	7	BELL	Bell signal
BS	8	08	10	BACKSPACE	Backspace
HT	9	09	11	HORIZ. TABULATOR	Horizontal tabulator
LF	10	0A	12	LINE FEED	Line feed
VT	11	0B	13	VERT. TABULATOR	Vertical tabulator
FF	12	0C	14	FORM FEED	Form feed
CR	13	0D	15	CARRIAGE RETURN	Carriage return
SO	14	0E	16	SHIFT OUT	Shift out
SI	15	0F	17	SHIFT IN	Shift in
DLE	16	10	20	DATA LINK ESCAPE	Data link escape
DC1	17	11	21	DEVICE CONTROL 1	Device control character 1
DC2	18	12	22	DEVICE CONTROL 2	Device control character 2
DC3	19	13	23	DEVICE CONTROL 3	Device control character 3
DC4	20	14	24	DEVICE CONTROL 4	Device control character 4
NAK	21	15	25	NEG. ACKNOWLEDGE	Negative acknowledge
SYN	22	16	26	SYNCRONOUS IDLE	Synchronization
ETB	23	17	27	EOF TRANSM. BLOCK	End of data transmission block
CAN	24	18	30	CANCEL	Invalid
EM	25	19	31	END OF MEDIUM	End of medium
SUB	26	1A	32	SUBSTITUTE	Substitution
ESC	27	1B	33	ESCAPE	Escape
FS	28	1C	34	FILE SEPARATOR	File separator
GS	29	1D	35	GROUP SEPARATOR	Group separator
RS	30	1E	36	RECORD SEPARATOR	Record separator
US	31	1F	37	UNIT SEPARATOR	Unit separator
SP	32	20	40	SPACE	Space
!	33	21	41	EXCLAMATION POINT	Exclamation point

ASCII	Dec.	Hex.	Oct.	Designation	Meaning
"	34	22	42	QUOTATION MARK	Quotation mark
#	35	23	43	NUMBER SIGN	Number sign
$	36	24	44	DOLLAR SIGN	Dollar sign
%	37	25	45	PERCENT SIGN	Percent sign
&	38	26	46	AMPERSAND	Ampersand
’	39	27	47	APOSTROPHE	Apostrophe
(	40	28	50	OPEN. PARENTHESIS	Open parenthesis
)	41	29	51	CLOS. PARENTHESIS	Closed parenthesis
*	42	2A	52	ASTERISK	Asterisk
+	43	2B	53	PLUS	Plus sign
,	44	2C	54	COMMA	Comma
-	45	2D	55	HYPHEN (MINUS)	Hyphen
.	46	2E	56	PERIOD (DECIMAL)	Period (decimal)
/	47	2F	57	SLANT	Slant
0	48	30	60	0	Number
1	49	31	61	1	Number
2	50	32	62	2	Number
3	51	33	63	3	Number
4	52	34	64	4	Number
5	53	35	65	5	Number
6	54	36	66	6	Number
7	55	37	67	7	Number
8	56	38	70	8	Number
9	57	39	71	9	Number
:	58	3A	72	COLON	Colon
;	59	3B	73	SEMICOLON	Semicolon
<	60	3C	74	LESS THAN	Less than
=	61	3D	75	EQUALS	Equals
>	62	3E	76	GREATER THAN	Greater than
?	63	3F	77	QUESTION MARK	Question mark
@	64	40	100	COMMERCIAL AT	Commercial AT
A	65	41	101	A	Capital letter
B	66	42	102	B	Capital letter
C	67	43	103	C	Capital letter
D	68	44	104	D	Capital letter

ASCII	Dec.	Hex.	Oct.	Designation	Meaning
E	69	45	105	E	Capital letter
F	70	46	106	F	Capital letter
G	71	47	107	G	Capital letter
H	72	48	110	H	Capital letter
I	73	49	111	I	Capital letter
J	74	4A	112	J	Capital letter
K	75	4B	113	K	Capital letter
L	76	4C	114	L	Capital letter
M	77	4D	115	M	Capital letter
N	78	4E	116	N	Capital letter
O	79	4F	117	O	Capital letter
P	80	50	120	P	Capital letter
Q	81	51	121	Q	Capital letter
R	82	52	122	R	Capital letter
S	83	53	123	S	Capital letter
T	84	54	124	T	Capital letter
U	85	55	125	U	Capital letter
V	86	56	126	V	Capital letter
W	87	57	127	W	Capital letter
X	88	58	130	X	Capital letter
Y	89	59	131	Y	Capital letter
Z	90	5A	132	Z	Capital letter
[	91	5B	133	OPENING BRACKET	Opening bracket
\	92	5C	134	REVERSE SLANT	Reverse slant
]	93	5D	135	CLOSING BRACKET	Closing bracket
^	94	5E	136	CIRCUMFLEX	Circumflex
_	95	5F	137	UNDERSCORE	Underscore
‘	96	60	140	GRAVE ACCENT	Grave accent
a	97	61	141	a	Lower case letter
b	98	62	142	b	Lower case letter
c	99	63	143	c	Lower case letter
d	100	64	144	d	Lower case letter
e	101	65	145	e	Lower case letter
f	102	66	146	f	Lower case letter
g	103	67	147	g	Lower case letter

ASCII	Dec.	Hex.	Oct.	Designation	Meaning
h	104	68	150	h	Lower case letter
i	105	69	151	i	Lower case letter
j	106	6A	152	j	Lower case letter
k	107	6B	153	k	Lower case letter
l	108	6C	154	l	Lower case letter
m	109	6D	155	m	Lower case letter
n	110	6E	156	n	Lower case letter
o	111	6F	157	o	Lower case letter
p	112	70	160	p	Lower case letter
q	113	71	161	q	Lower case letter
r	114	72	162	r	Lower case letter
s	115	73	163	s	Lower case letter
t	116	74	164	t	Lower case letter
u	117	75	165	u	Lower case letter
v	118	76	166	v	Lower case letter
w	119	77	167	w	Lower case letter
x	120	78	170	x	Lower case letter
y	121	79	171	y	Lower case letter
z	122	7A	172	z	Lower case letter
{	123	7B	173	OPENING BRACE	Opening brace
|	124	7C	174	VERTICAL LINE	Vertical line
}	125	7D	175	CLOSING BRACE	Closing brace
~	126	7E	176	TILDE	Tilde
DEL	127	7F	177	DELETE (RUBOUT)	Delete

15.3 Bar code samples

15.3.1 Module 0.3

Code type 01: Interleaved 2 of 5

Modul 0,3

1122334455

Code type 02: Code 39

Modul 0,3

135AC

Code type 11: Codabar

Modul 0,3

A1213 14A

Code 128

Modul 0,3

abcde

Code type 08: EAN 128

Modul 0,3

leuze

Code type 06: UPC-A

SC 2

1 23456 78901 2

Code type 07: EAN 8

SC 3

3456 7890

Code type 10: EAN 13 Add-on

SC 0 S

77889

1 122334 455666

Figure 15.1: Bar code sample labels (module 0.3)

15.3.2 Module 0.5

Code type 01: Interleaved 2 of 5

Modul 0,5

6677889900

Code type 02: Code 39

Modul 0,5

246BD

Code type 11: Codabar

Modul 0,5

A1511617A

Code 128

Modul 0,5

fghij

Code type 08: EAN 128

Modul 0,5

LEUZE

Code type 06: UPC-A

SC 4

0 98765 43219 8

Code type 07: EAN 8

SC 6

9876 5430

Code type 10: EAN 13 Add-on

SC 2

0 099887 766550 44332

Figure 15.2: Bar code sample labels (module 0.5)

Level 1 ▲▼ : selection	Level 2 ▲▼ : selection ESC : back	Level 3 ▲▼ : selection ESC : back	Level 4 ▲▼ : selection ESC : back	Level 5 ▲▼ : selection ESC : back	Selection/configuration option ▲▼ : selection ↵ : activate ESC : back	Detailed information on
Device information						page 90
Bar code reading						page 86
Parameter ↵	Parameter handling ↵	Parameter enabling			OFF/ON	page 92
		Parameters to default			All parameters are reset to their factory settings	
	Decoder table ↵	Max. no. of labels ↵			Sets the number of labels to be decoded (0 … 64)	page 93
		Decoder 1-4 ↵	Symbology ↵		Code type: no code / Code 2 of 5 Interleaved / Code 39 / Code 32 / Code UPC / Code EAN / Code 128 / EAN Addendum / Codabar / Code 93 / RSS 14 / RSS Limited / RSS Expanded	
			Number of digits ↵	Interval mode ↵	OFF / ON to specify a range of permitted numbers of digits	
				Digits 1-5 ↵	0 … 64 characters	
			Reading reliability ↵		2 … 100	
			Check digit method ↵		Check digit method used for decoding	
			Check digit transm. ↵		Check digit transmission different from standard / as required by the standard	
	Digital SWIO ↵	Sw. input/output 1-4 ↵	I/O mode ↵		Input / Output / Passive	page 96
			Switching input ↵	Inverted ↵	OFF / ON	
				Debounce time ↵	0 … 1000 ms	
				Start-up delay ↵	0 … 65535 ms	
				Pulse duration ↵	0 … 65535 ms	
				Switch-off delay ↵	0 … 65535 ms	
				Function ↵	Function that is carried out after the switching input is activated	
			Switching output ↵	Inverted ↵	OFF / ON	
				Signal delay ↵	0 … 65535 ms	
				Pulse duration ↵	0 … 65535 ms	
				Activ. function 1-4 ↵	Specifies the event that activates the switching output	
				Deactiv. function 1-4 ↵	Specifies the event that deactivates the switching output	
	EtherNet/IP ↵	Activation ↵			Off/On	page 99
		Ethernet interface ↵	IP address ↵		Address of the BCL 558*i*	
			Gateway ↵		Gateway for the BCL 558*i*	
			Net mask ↵		Net mask for the subnet of the BCL 558*i*	
			DHCP activated ↵		Off/On	
			BootP activated ↵		Off/On	
Language ↵					Deutsch / English / Español / Français / Italiano	page 100
Service ↵	Diagnostics				Number of readings, reading gates, reading rate / non-reading rate etc..	page 100
	Status messages				Exclusively for service purposes by Leuze electronic	
Actions ↵	Start decoding	Stop decoding			Perform a single reading	page 101
	Start alignment	Stop alignment			Alignment aid (alignment mode)	
	Start auto-setup	Stop auto-setup			Automatic detection of code type and number of digits	
	Start teach-in	Stop teach-in			Teach-in of a reference code	