Leuze electronic

the sensor people

SMART
SENSOR
BUSINESS

AMS 348i

Optical Laser Measurement System – PROFINET

de 05-2017/07 50113340
We reserve the right to
make technical changes

Original operating instructions

ПРОМЭЛЕКТРОНИКА / sales@prom-elec.com

© 2017
Leuze electronic GmbH + Co. KG
In der Braike 1
D-73277 Owen / Germany
Phone: +49 7021 573-0
Fax: +49 7021 573-199
http://www.leuze.com
info@leuze.com

The main menus

```
AMS 348i 120
Leuze electronic
        GmbH & Co. KG
SW: V 1.3.0   HW:1
SN: ----------------------
```

Device information - main menu

This menu item contains detailed information on
- Device model,
- Manufacturer,
- Software and hardware version,
- Serial number.

No entries can be made via the display.

```
Network information
Address:    ---.---.---.---
Net mask:   ---.---.---.---
Gateway:    ---.---.---.---
MAC ID:     --.--.--.--.--.--
DevName:    ----------------------
```

Network information - main menu

Under this menu item, you will find detailed information on the network addresses.
No entries can be made via the display.

```
IO1 LSR PLB        LNK0
IO2 TMP ATT        LNK1
ERR

  + 87.000m
```

Status- and measurement data - main menu

- Display of status-, warning-, and error messages.
- Status overview of the switching inputs/outputs.
- Bar graph for the reception level.
- Activated interface.
- Measurement value.

No entries can be made via the display.
See "Indicators in the display" on page 38.

```
Parameter
  Parameter handling
  PROFINET
  Position value
  I/O
  Other
```

Parameter - main menu

Configuration for PROFI NET is carried out via the modules of the GSDML file.

```
Language selection
o Deutsch
● English
o Español
o Français
o Italiano
```

Language selection - main menu

- Selection of the display language.

See "Language selection menu" on page 48.

```
Service
  Status messages
  Diagnostics
  Expanded diagnostics
```

Service - main menu

- Display of status messages.
- Display of diagnostic data.

No entries can be made via the display.
See "Service menu" on page 48.

Device buttons:

- Navigate **upward/laterally**
- Navigate **downward/laterally**
- ESC **ESCAPE** leave
- **ENTER** confirm

Input of values

```
100
 <-0123456789     save
Standard ----- Unit
   126  |     |
```

- ◄ + ↵ **Delete character**
- 0...9 + ↵ **Enter digit**
- save + ↵ **Save input**

1 General information 5
1.1 Explanation of symbols 5
1.2 Declaration of conformity 5
1.3 Description of functions AMS 348*i* 6

2 Safety 7
2.1 Intended use 7
2.2 Foreseeable misuse 8
2.3 Competent persons 8
2.4 Disclaimer 9
2.5 Laser safety notices 9

3 Fast commissioning / operating principle 12
3.1 Mounting the AMS 348*i* 12
3.1.1 Mounting the device 12
3.1.2 Mounting the reflector 12
3.2 Connecting the voltage supply 13
3.3 Display 13
3.4 AMS 348*i* on the PROFINET 13

4 Specifications 14
4.1 Specifications of the laser measurement system 14
4.1.1 General specifications AMS 348*i* 14
4.1.2 Dimensioned drawing AMS 348*i* 16
4.1.3 Type overview AMS 348*i* 17

5 Installation and mounting 18
5.1 Storage, transportation 18
5.2 Mounting the AMS 348*i* 19
5.2.1 Optional mounting bracket 21
5.2.2 Parallel mounting of the AMS 348*i* 22
5.2.3 Parallel mounting of AMS 348*i* and DDLS optical data transmission 23
5.3 Mounting the AMS 348*i* with laser beam deflector unit 24
5.3.1 Mounting the laser beam deflector unit With integrated mounting bracket 24
5.3.2 Dimensioned drawing of US AMS 01 deflector unit 25
5.3.3 Mounting the US 1 OMS deflector unit without mounting bracket 26

6 Reflectors 27

6.1 General information 27

6.2 Description of the reflective tape 27
6.2.1 Specifications of the self-adhesive foil 28
6.2.2 Specifications of the reflective tape on a support plate 28
6.2.3 Dimensioned drawing of reflective tape on a support plate 29
6.2.4 Specifications of heated reflectors 30
6.2.5 Dimensioned drawing of heated reflectors 31

6.3 Selecting reflector sizes 32

6.4 Mounting the reflector 33
6.4.1 General information 33
6.4.2 Mounting the reflector 33
6.4.3 Table of reflector pitches 36

7 Electrical connection 37

7.1 Safety notices for the electrical connection 37

7.2 PWR – voltage supply / switching input/output 38

7.3 PROFINET BUS IN 38

7.4 PROFINET BUS OUT 39

7.5 Service 39

8 Display and control panel AMS 348*i* 40

8.1 Structure of the control panel 40

8.2 Status display and operation 40
8.2.1 Indicators in the display 40
8.2.2 LED status displays 42
8.2.3 Control buttons 44

8.3 Menu description 45
8.3.1 The main menus 45
8.3.2 Parameter menu 47
8.3.3 Language selection menu 50
8.3.4 Service menu 50

8.4 Operation 51

9 PROFINET interface 53

9.1 General information on PROFINET 53

9.2 Identification & Maintenance Functions 53

9.3 PROFINET – star topology 54
9.4 PROFINET – linear topology 54
9.5 PROFINET – General information on wiring 55
9.6 PROFINET – Cable lengths and shielding 55
9.7 PROFINET - Electrical connection 56
9.8 PROFINET – Commissioning and configuration. 57
9.8.1 PROFINET implementation of the AMS 348*i* 57
9.8.2 Measures to be performed prior to the initial commissioning 58
9.8.3 Starting the device 59
9.8.4 Configuration steps for a Siemens Simatic S7 control 60
9.9 PROFINET GSD file 67
9.9.1 General information on the GSD file 67
9.9.2 Overview of the GSD modules 69
9.9.3 Detail description of the modules 71

10 Diagnostics and troubleshooting 96
10.1 Service and diagnostics in the display of the AMS 348*i* 97
10.1.1 Status messages 97
10.1.2 Diagnostics 98
10.1.3 Expanded diagnostics 98
10.2 General causes of errors 98
10.2.1 Power LED 99
10.3 Interface errors. 99
10.3.1 BUS LED 99
10.4 Status display in the display of the AMS 348*i* 100

11 Type overview and accessories 102
11.1 Type key 102
11.2 Type overview AMS 348*i* (PROFINET) 102
11.3 Overview of reflector types 103
11.4 Accessories 103
11.4.1 Accessory mounting bracket 103
11.4.2 Accessory deflector unit 103
11.4.3 Accessory M12 connector 103
11.4.4 Accessory ready-made cables for voltage supply 104
11.4.5 Accessory ready-made cables for PROFINET 105

12 Maintenance 107

12.1 General maintenance information 107

12.2 Repairs, servicing 107

12.3 Disassembling, packing, disposing 107

1 General information

1.1 Explanation of symbols

The symbols used in this operating manual are explained below.

Attention!

This symbol precedes text messages which must strictly be observed. Failure to comply with this information results in injuries to personnel or damage to the equipment.

Attention Laser!

This symbol warns of possible danger caused by hazardous laser radiation.

Notice!

This symbol indicates text passages containing important information.

1.2 Declaration of conformity

The AMS 348*i* absolute measuring optical laser measurement system was designed and manufactured in accordance with applicable European directives and standards.

The AMS series is "UL LISTED" according to American and Canadian safety standards and fulfills the requirements of Underwriter Laboratories Inc. (UL).

Notice!

The Declaration of Conformity for these devices can be requested from the manufacturer.

The manufacturer of the product, Leuze electronic GmbH + Co. KG in D-73277 Owen, possesses a certified quality assurance system in accordance with ISO 9001.

1.3 Description of functions AMS 348*i*

The AMS 348*i* optical laser measurement system calculates distances to fixed as well as moving system parts. The distance to be measured is calculated according to the principle of the propagation time of radiated light. Here, the light emitted by the laser diode is reflected by a reflector onto the receiving element of the laser measurement system. The AMS 348*i* uses the "propagation time" of the light to calculate the distance to the reflector. The high absolute measurement accuracy of the laser measurement system and the fast response time are designed for position control applications.

With the AMS 3xx*i* product series, Leuze electronic makes available a range of internationally relevant interfaces. Note that each interface version listed below corresponds to a different AMS 3xx*i* model.

AMS 304*i*

AMS 348*i*

AMS 355*i*

AMS 358*i*

AMS 335*i*

AMS 338*i*

AMS 308*i*

AMS 384*i*

AMS 301*i*

AMS 300*i*

2 Safety

This sensor was developed, manufactured and tested in line with the applicable safety standards. It corresponds to the state of the art.

2.1 Intended use

The AMS is an absolute measuring optical laser measurement system which allows distance measurement of up to 300m against a reflector.

Areas of application

The AMS is designed for the following areas of application:

- Positioning of automated, moving plant components
- Travel and lifting axes of high-bay storage devices
- Repositioning units
- Gantry crane bridges and their trolleys
- Lifts
- Electroplating plants

CAUTION

Observe intended use!

- Only operate the device in accordance with its intended use. The protection of personnel and the device cannot be guaranteed if the device is operated in a manner not complying with its intended use.
  Leuze electronic GmbH + Co. KG is not liable for damages caused by improper use.
- Read the technical description before commissioning the device. Knowledge of this technical description is an element of proper use.

NOTICE

Comply with conditions and regulations!

- Observe the locally applicable legal regulations and the rules of the employer's liability insurance association.

Attention

For UL applications, use is permitted exclusively in Class 2 circuits according to NEC (National Electric Code).

2.2 Foreseeable misuse

Any use other than that defined under "Intended use" or which goes beyond that use is considered improper use.

In particular, use of the device is not permitted in the following cases:

- Rooms with explosive atmospheres
- As stand-alone safety component in accordance with the machinery directive [1)]
- For medicinal purposes

NOTICE
Do not modify or otherwise interfere with the device. ↳ Do not carry out modifications or otherwise interfere with the device. The device must not be tampered with and must not be changed in any way. The device must not be opened. There are no user-serviceable parts inside. Repairs must only be performed by Leuze electronic GmbH + Co. KG.

2.3 Competent persons

Connection, mounting, commissioning and adjustment of the device must only be carried out by competent persons.

Prerequisites for competent persons:

- They have a suitable technical education.
- They are familiar with the rules and regulations for occupational safety and safety at work.
- They are familiar with the technical description of the device.
- They have been instructed by the responsible person on the mounting and operation of the device.

Certified electricians

Electrical work must be carried out by a certified electrician.

Due to their technical training, knowledge and experience as well as their familiarity with relevant standards and regulations, certified electricians are able to perform work on electrical systems and independently detect possible dangers.

In Germany, certified electricians must fulfill the requirements of accident-prevention regulations BGV A3 (e.g. electrician foreman). In other countries, there are respective regulations that must be observed.

1) Use as safety-related component within the safety function is possible, if the component combination is designed correspondingly by the machine manufacturer.

2.4 Disclaimer

Leuze electronic GmbH + Co. KG is not liable in the following cases:

- The device is not being used properly.
- Reasonably foreseeable misuse is not taken into account.
- Mounting and electrical connection are not properly performed.
- Changes (e.g., constructional) are made to the device.

2.5 Laser safety notices

ATTENTION LASER RADIATION – LASER CLASS 2

Never look directly into the beam!

The device satisfies the requirements of IEC 60825-1:2007 (EN 60825-1:2007) safety regulations for a product in **laser class 2** as well as the U.S. 21 CFR 1040.10 regulations with deviations corresponding to "Laser Notice No. 50" from June 24th, 2007.

- Never look directly into the laser beam or in the direction of reflecting laser beams.
  If you look into the beam path over a longer time period, there is a risk of injury to the retina.
- Do not point the laser beam of the device at persons!
- Interrupt the laser beam using a non-transparent, non-reflective object if the laser beam is accidentally directed towards a person.
- When mounting and aligning the device, avoid reflections of the laser beam off reflective surfaces!
- CAUTION! The use of operating or adjusting devices other than those specified here or carrying out of differing procedures may lead to dangerous exposure to radiation.
- Adhere to the applicable legal and local regulations regarding protection from laser beams.
- The device must not be tampered with and must not be changed in any way.
  There are no user-serviceable parts inside the device.
  Repairs must only be performed by Leuze electronic GmbH + Co. KG.

NOTICE

Affix laser information and warning signs!

Laser information and warning signs are attached to the device (see figure 2.1):

In addition, self-adhesive laser warning and information signs (stick-on labels) are supplied in several languages (see figure 2.2).

- Affix the laser information sheet to the device in the language appropriate for the place of use.
  When using the device in the US, use the stick-on label with the "Complies with 21 CFR 1040.10" notice.
- Affix the laser information and warning signs near the device if no signs are attached to the device (e.g., because the device is too small) or if the attached laser information and warning signs are concealed due to the installation position.
  Affix the laser information and warning signs so that they are legible without exposing the reader to the laser radiation of the device or other optical radiation.

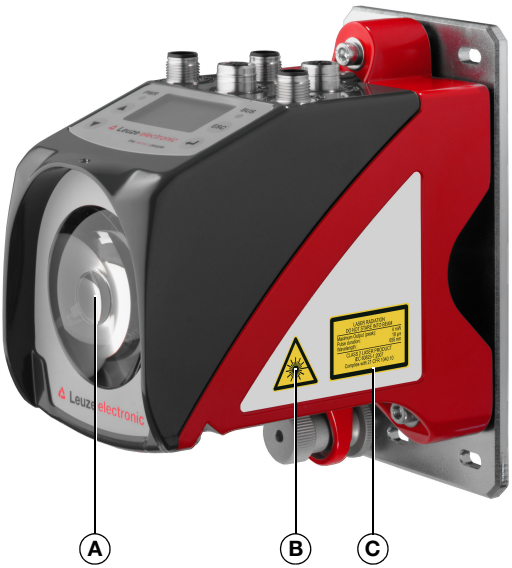

A Laser aperture
B Laser warning sign
C Laser information sign with laser parameters

Figure 2.1: Laser apertures, laser warning signs

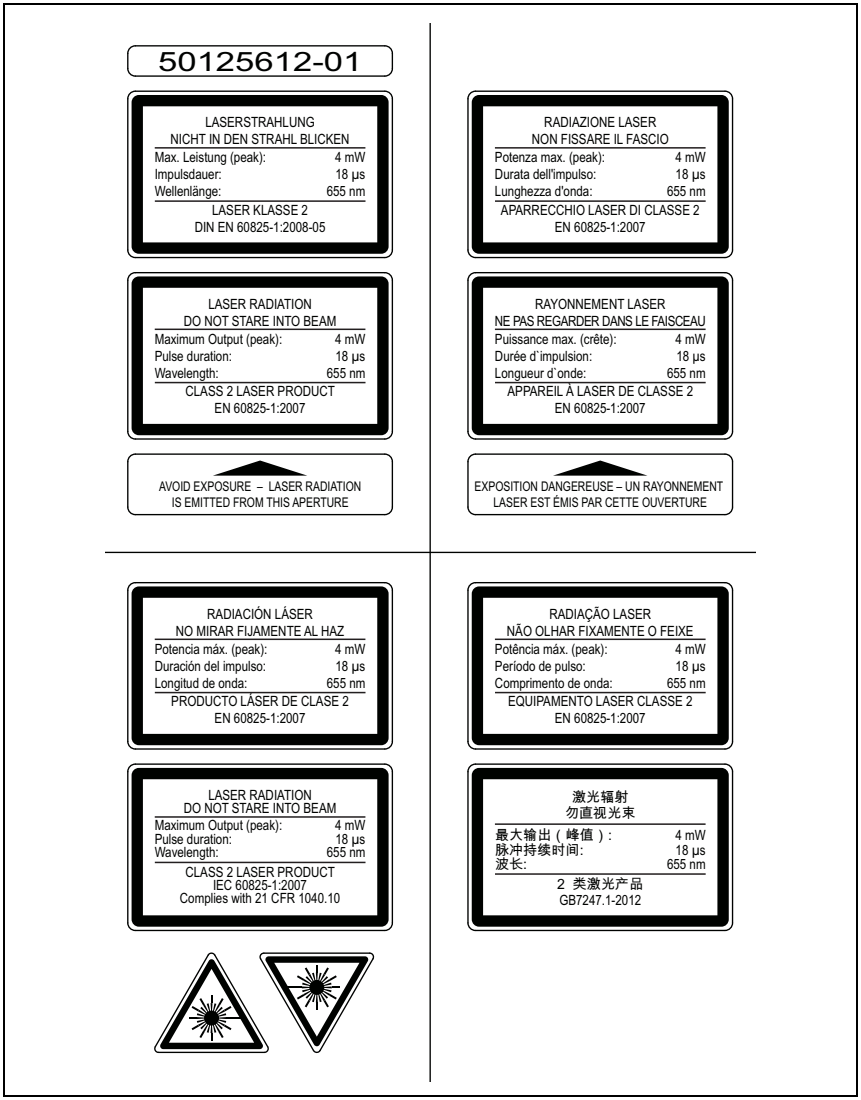

Figure 2.2: Laser warning and information signs – supplied stick-on labels

3 Fast commissioning / operating principle

Notice!

*Below, you will find a **short description for the initial commissioning** of the AMS 348i. Detailed explanations for the listed points can be found throughout the handbook.*

3.1 Mounting the AMS 348*i*

The AMS 348*i* and the corresponding reflector are mounted on two mutually opposing, plane-parallel, flat walls.

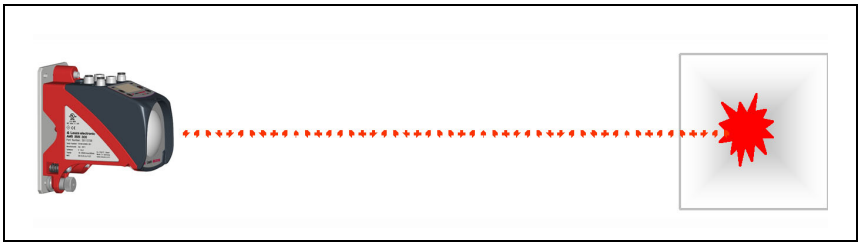

Figure 3.1: Schematic illustration of mounting

Attention!

For error-free position measurement, there must be an unobstructed line-of-sight between the AMS 348*i and the reflector.*

3.1.1 Mounting the device

The laser is mounted on a vertical wall using 4 screws (M5).

Alignment is performed using 2 adjustment screws. Adjust so that the laser light spot is positioned at the center of the reflector. The alignment is to be secured with the knurled nut and locked with the M5 nut.

Further information can be found in chapter 5.2 and chapter 5.3.

3.1.2 Mounting the reflector

The reflector is mounted on a vertical wall with 4 screws (M5). The reflector is angled using the included shims. Incline the reflector by approx. 1°.

Detailed information can be found in chapter 6.4.

3.2 Connecting the voltage supply

The laser measurement system is connected using M12 connectors. The voltage supply is connected via the PWR M12 connection (18 … 30VDC). 2 freely programmable switching inputs/outputs for individual adaptation to the respective application are also available here.

Detailed information can be found in chapter 7.

3.3 Display

Once the laser measurement system is supplied with voltage, the device status as well as the measured position values can be read on the display. The display automatically switches to the display of the measurement values.

Use the up/down buttons ▲ ▼ to the left of the display to read and change a wide range of data and parameters.

Detailed information can be found in chapter 8.

3.4 AMS 348*i* on the PROFINET

Install the GSDML file associated with the AMS 348*i* in the PROFINET Manager of your control. Activate the desired modules (at least one module).

The network address for PROFINET is assigned via the PROFINET Manager.

Standalone operation in PROFINET

During standalone operation of the AMS 348*i*, the PROFINET network is connected to BUS IN. BUS OUT requires no terminating resistor.

Network operation in PROFINET

In network mode the AMS 348*i* is connected to PROFINET via BUS IN. Further PROFINET participants can be connected to the integrated switch of the AMS 348*i* via the BUS OUT connection.

Commissioning of the AMS 348i

The procedures described below are for the configuration of an AMS 348*i* with a Siemens Simatic S7 PLC.

- Switching on the supply voltage.
  The AMS 348*i* displays the **"Status and measurement values"** main menu.
- Installation of the corresponding GSD file in the Simatic Hardware Manager.
- Projection of the PROFINET network including the AMS 348*i* GSD file. Definition of the IP addresses, sub-network mask and definition of a device name assigned to the IP address.
- Download of the project to the connected Siemens control.

Further information regarding the individual commissioning steps is provided in see chapter 9.8.4 "Configuration steps for a Siemens Simatic S7 control".

Detailed information can be found in chapter 9.

4 Specifications

4.1 Specifications of the laser measurement system

4.1.1 General specifications AMS 348*i*

Measurement data	AMS 348*i* 40 (H)	AMS 348*i* 120 (H)	AMS 348*i* 200 (H)	AMS 348*i* 300 (H)
Measurement range	0.2 … 40 m	0.2 … 120 m	0.2 … 200 m	0.2 … 300 m
Accuracy	± 2 mm	± 2 mm	± 3 mm	± 5 mm
Consistency [1]	0.3 mm	0.5 mm	0.7 mm	1.0 mm
Light spot diameter	≤ 40 mm	≤ 100 mm	≤ 150 mm	≤ 225 mm
Output time	1.7 ms			
Response time	14 ms			
Basis for contouring error calculation	7 ms			
Resolution	adjustable, see chapter of the individual interfaces			
Temperature drift	≤ 0.1 mm/K			
Ambient temperature sensitivity	1 ppm/K			
Air pressure sensitivity	0.3 ppm/hPa			
Traverse rate	≤ 10 m/s			
Electrical data				
Supply voltage Vin [2]	18 … 30 VDC			
Current consumption	without device heating: ≤ 250 mA / 24 VDC with device heating: ≤ 500 mA / 24 VDC			
Optical data				
Transmitter	laser diode, red light			
Laser class	2 acc. to IEC 60825-1:2007, CDRH			
Wavelength	655 nm			
Impulse duration	≤ 18 µs			
Max. output power (peak)	≤ 4 mW			
Interfaces				
Interface type	PROFINET-RT with integrated switch for BUS IN and BUS OUT			
Protocol	PROFINET-RT communication			
Conformance Class	B			
Operating and display elements				
Keyboard	4 buttons			
Display	monochromatic graphical display, 128 x 64 pixels			
LED	4 LEDs, 2 of which are used to display the PROFINET connection			

Inputs/outputs	
Quantity	2, programmable
Input	protected against polarity reversal
Output	max. 60 mA, short-circuit proof
Mechanical data	
Housing	cast zinc and aluminum
Optics	glass
Weight	approx. 2.45 kg
Protection class	IP 65 acc. to EN 60529 [3]
Environmental conditions	
Operating temperature	
without device heating	-5 °C … +50 °C
with device heating	-30 °C … +50 °C [4]
Storage temperature	-30 °C … +70 °C
Air humidity	max. 90 % rel. humidity, non-condensing
Mechanical/electrical loading capacity	
Vibrations	acc. to EN 60068-2-6
Noise	acc. to EN 60060-2-64
Shock	acc. to EN 60068-2-27
EMC	acc. to EN 61000-6-2 and EN 61000-6-4 [5]

1) Statistical error: 1 sigma; minimum switch-on time: 2 min.
2) For UL applications: only for use in "Class 2" circuits acc. to NEC.
3) With screwed-on M12 plugs or mounted caps.
4) With devices with heating, the switch on/off area of the internal heating can be extended to prevent condensation from forming. A 100% prevention of the formation of condensation cannot be guaranteed due to the limited heating capacity of the AMS 348*i*.
5) This is a Class A product. In a domestic environment this product may cause radio interference, in which case the operator may be required to take adequate measures.

The AMS 348*i* is designed in accordance with safety class III for supply with PELV (protective extra-low voltage).

4.1.2 Dimensioned drawing AMS 348*i*

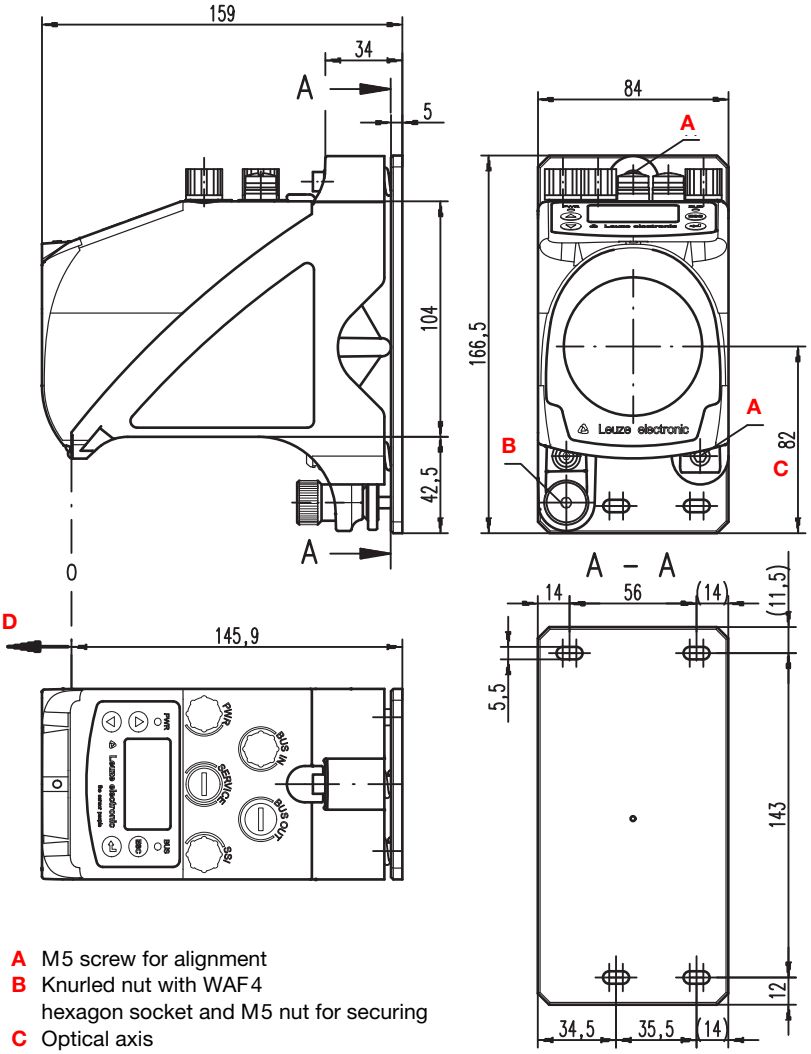

Figure 4.1: Dimensioned drawing AMS 348*i*

4.1.3 Type overview AMS 348*i*

AMS 348i (PROFINET)

Type designation	Description	Part no.
AMS 348*i* 40	40 m operating range, PROFINET interface	50113709
AMS 348*i* 120	120 m operating range, PROFINET interface	50113710
AMS 348*i* 200	200 m operating range, PROFINET interface	50113711
AMS 348*i* 300	300 m operating range, PROFINET interface	50113712
AMS 348*i* 40 H	40 m operating range, PROFINET interface, integrated heating	50113713
AMS 348*i* 120 H	120 m operating range, PROFINET interface, integrated heating	50113714
AMS 348*i* 200 H	200 m operating range, PROFINET interface, integrated heating	50113715
AMS 348*i* 300 H	300 m operating range, PROFINET interface, integrated heating	50113716

Table 4.1: Type overview AMS 348*i*

5 Installation and mounting

5.1 Storage, transportation

Attention!

When transporting or storing, package the device so that it is protected against collision and humidity. Optimum protection is achieved when using the original packaging. Heed the required environmental conditions specified in the technical data.

Unpacking

- *Check the packaging for any damage. If damage is found, notify the post office or shipping agent as well as the supplier.*
- *Check the delivery contents using your order and the delivery papers:*
  - Delivered quantity
  - Device type and model as indicated on the nameplate
  - Brief manual

The name plate provides information as to what AMS 348*i* type your device is. For specific information, please refer to chapter 11.2.

Name plates

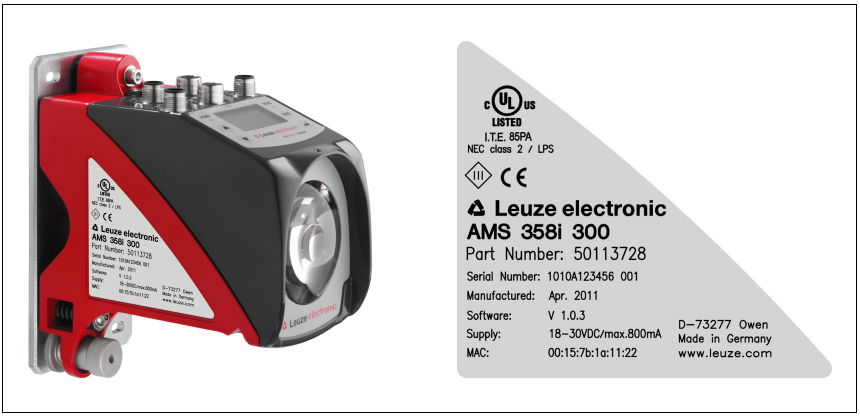

Figure 5.1: Device name plate using the AMS 300*i* as an example

Notice!

Please note that the shown name plate is for illustration purposes only; the contents do not correspond to the original.

- *Save the original packaging for later storage or shipping.*

If you have any questions concerning your shipment, please contact your supplier or your local Leuze electronic sales office.

Observe the applicable local regulations when disposing of the packaging materials.

5.2 Mounting the AMS 348*i*

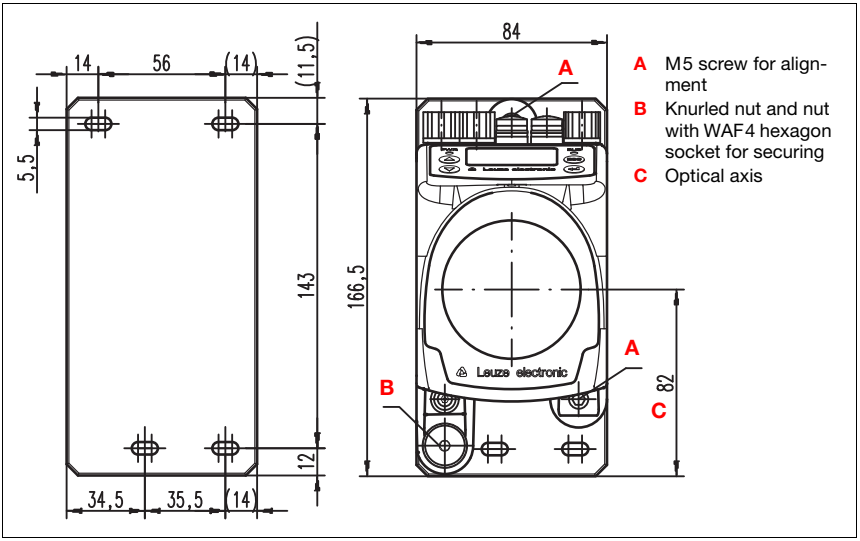

Figure 5.2: Mounting the device

The AMS 348*i* and the corresponding reflector are mounted on two mutually opposing, plane-parallel, flat walls or system parts. For error-free position measurement, there must be an unobstructed line-of-sight connection between the AMS 348*i* and the reflector.

Use M5 screws to fasten the laser measurement system. Secure the screws with a toothed lock washer to protect against loosening caused by vibrations.

Aligning the laser light spot in the center of the reflector

The laser light spot has to be aligned so that it always hits the center of the opposing reflector, both at close range as well as at the maximum measurement distance. **To align, use the two M5 Allen screws** ("**A**" in figure 5.2). When aligning please ensure that the knurled nut and the lock nut ("**B**" in figure 5.2) are opened wide.

Attention!

To prevent the laser measurement system from moving out of alignment during continuous operation, subsequently hand-tighten the knurled nut and counterlock with the nut with WAF4 hexagon socket ("B" in figure 5.2). Knurled nut and nut must not be tightened until alignment has been completed.

Attention!

The device must not be opened. Failure to comply will render the guarantee void. Warranted features cannot be guaranteed after the device has been opened.

5.2.1 Optional mounting bracket

A mounting bracket for mounting the AMS 348*i* on a flat, horizontal surface is available as an optional accessory.

Type designation: MW OMS/AMS 01

Part no.: 50107255

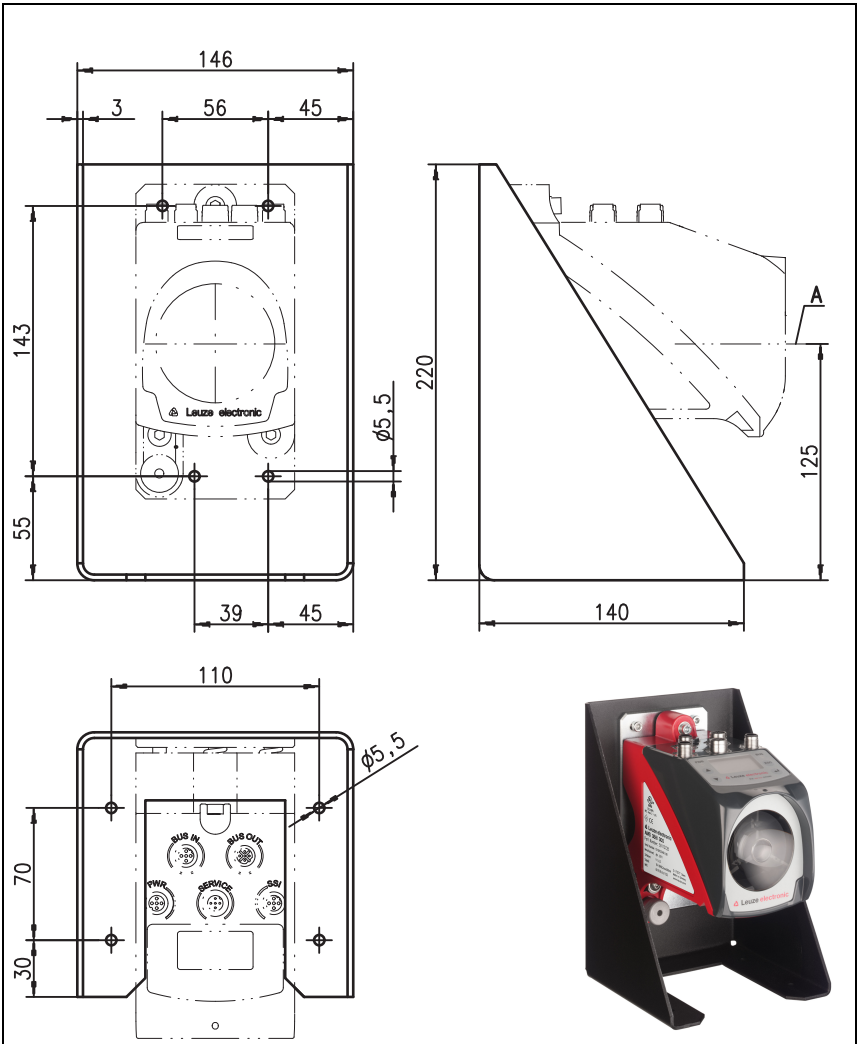

Figure 5.3: Optional mounting bracket

5.2.2 Parallel mounting of the AMS 348*i*

Definition of the term "parallel spacing"

As shown in figure 5.4, dimension X describes the "parallel spacing" of the inner edges of the two laser light spots on the reflector.

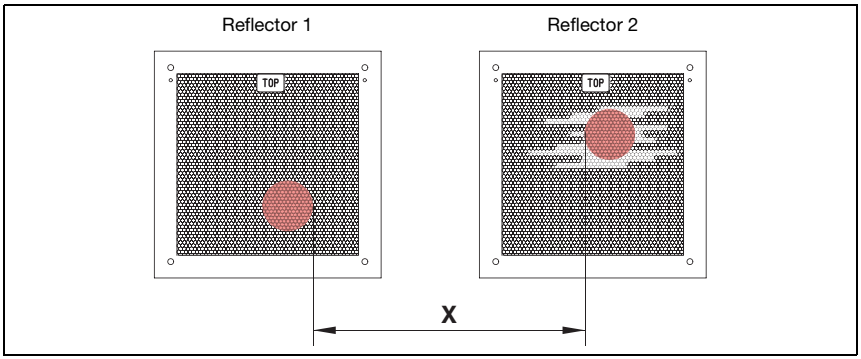

Figure 5.4: Minimum parallel spacing X between adjacent AMS 348*i*

The diameter of the light spot increases with distance.

	AMS 348*i* 40 (H)	AMS 348*i* 120 (H)	AMS 348*i* 200 (H)	AMS 348*i* 300 (H)
Max. measurement distance	40 m	120 m	200 m	300 m
Light spot diameter	≤ 40 mm	≤ 100 mm	≤ 150 mm	≤ 225 mm

Thus, the center-to-center spacing of the two AMS 348*i* devices with respect to one another can be calculated as a function of the maximum measurement distance.

To define the minimum parallel spacing between two AMS 348*i*, it is necessary to distinguish between three different arrangements of AMS 348*i* and reflectors.

The AMS 348*i* are mounted stationary and in parallel on one plane.
Both reflectors move independently of one another at different distances to the AMS 348*i*.

Minimum parallel spacing X of the two laser light spots:

X = 100 mm + (max. measurement distance in mm x 0.01)

The AMS 348*i* are mounted stationary and in parallel on one plane.
Both reflectors move in parallel at the same distance to the AMS 348*i*.

Measurement distance **up to 120 m**: minimum parallel spacing **X ≥ 600 mm**

Measurement distance **up to 200 m**: minimum parallel spacing **X ≥ 750 mm**

Measurement distance **up to 300 m**: minimum parallel spacing **X ≥ 750 mm**

The reflectors are mounted stationary and in parallel on one plane.
Both AMS 348*i* move independently of one another at different or the same distances to the reflectors.

Measurement distance **up to 120 m**: minimum parallel spacing **X** ≥ **600 mm**

Measurement distance **up to 200 m**: minimum parallel spacing **X** ≥ **750 mm**

Measurement distance **up to 300 m**: minimum parallel spacing **X** ≥ **750 mm**

Notice!

*Please note that when the AMS 348*i* are mounted in a mobile manner, travel tolerances could cause the two laser light spots to move towards each other.*
*Take the travel tolerances of the vehicle into account when defining the parallel spacing of adjacent AMS 348*i*.*

5.2.3 Parallel mounting of AMS 348*i* and DDLS optical data transmission

The optical data transceivers of the DDLS series and the AMS 348*i* do not interfere with one another. Depending on the size of the used reflector, the DDLS can be mounted with a minimum parallel spacing of 100 mm to the AMS 348*i*. The parallel spacing is independent of the distance.

5.3 Mounting the AMS 348*i* with laser beam deflector unit

General information

The two available deflector units are used for the 90° deflection of the laser beam, see "Accessory deflector unit" on page 103.

Attention!

The deflector units are designed for a maximum range of 40m.
Longer distances on request.

5.3.1 Mounting the laser beam deflector unit With integrated mounting bracket

The AMS 348*i* is screwed onto the mechanism of the US AMS 01 deflector unit. The mirror can be mounted for three deflection directions:

1. Upward beam deflection
2. Beam deflection to the left
3. Beam deflection to the right

The deflector unit is mounted on plane-parallel, flat walls or plant components. For error-free position measurement, there must be an interruption-free line-of-sight between the AMS 348*i*… and the deflection mirror as well as between the mirror and the reflector.

Use the M5 screws to mount the deflector unit. Secure the screws with a toothed lock washer to protect against loosening caused by vibrations.

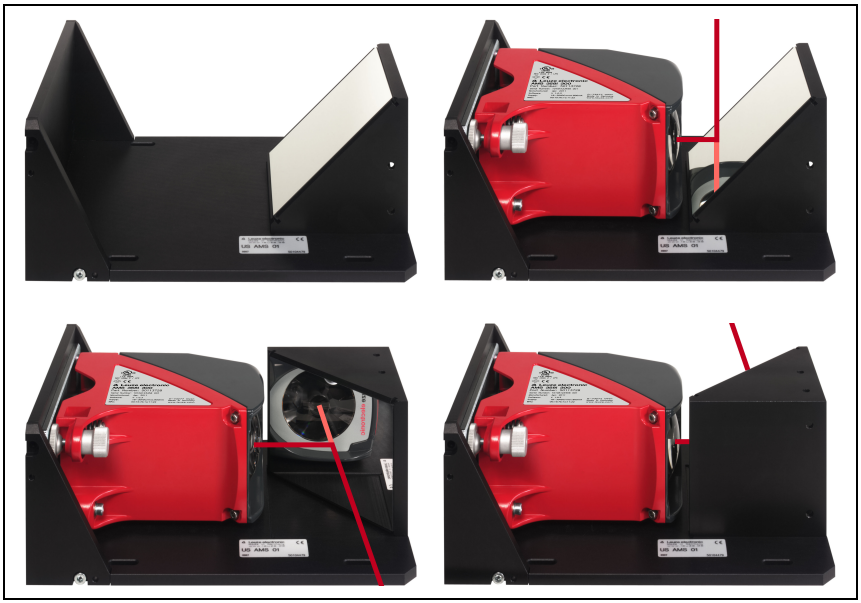

Figure 5.5: Mounting variants of the US AMS 01 laser beam deflector unit

5.3.2 Dimensioned drawing of US AMS 01 deflector unit

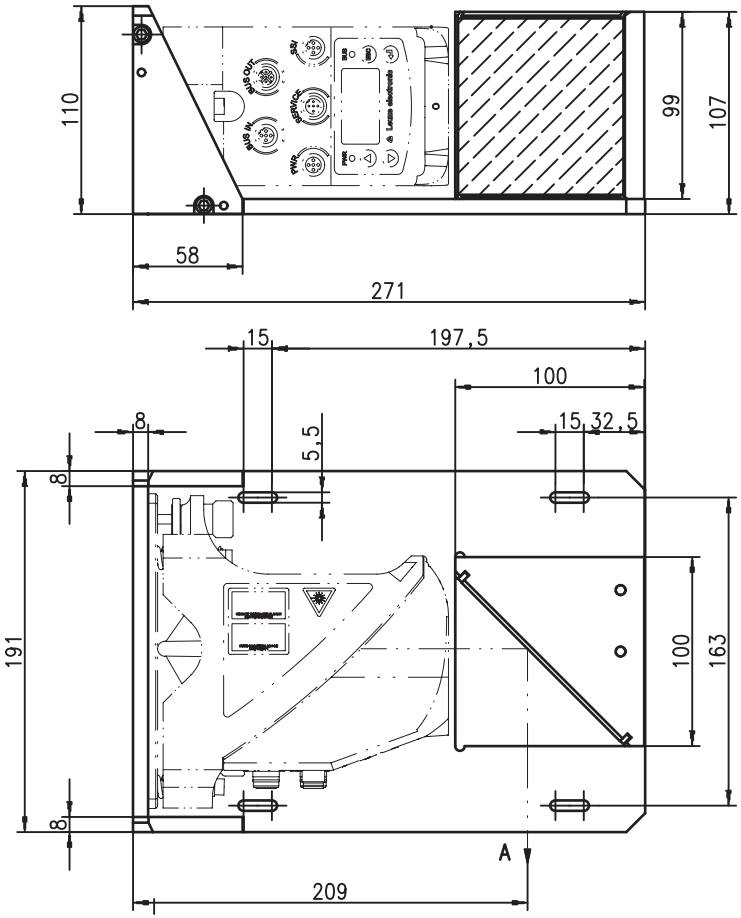

A Laser beam

Figure 5.6: Dimensioned drawing of US AMS 01 deflector unit

5.3.3 Mounting the US 1 OMS deflector unit without mounting bracket

The US 1 OMS deflector unit and the AMS 348*i* are mounted separately.

Notice!

When mounting, make certain that the laser light spot of the AMS 348i is aligned in the center of the deflection mirror.

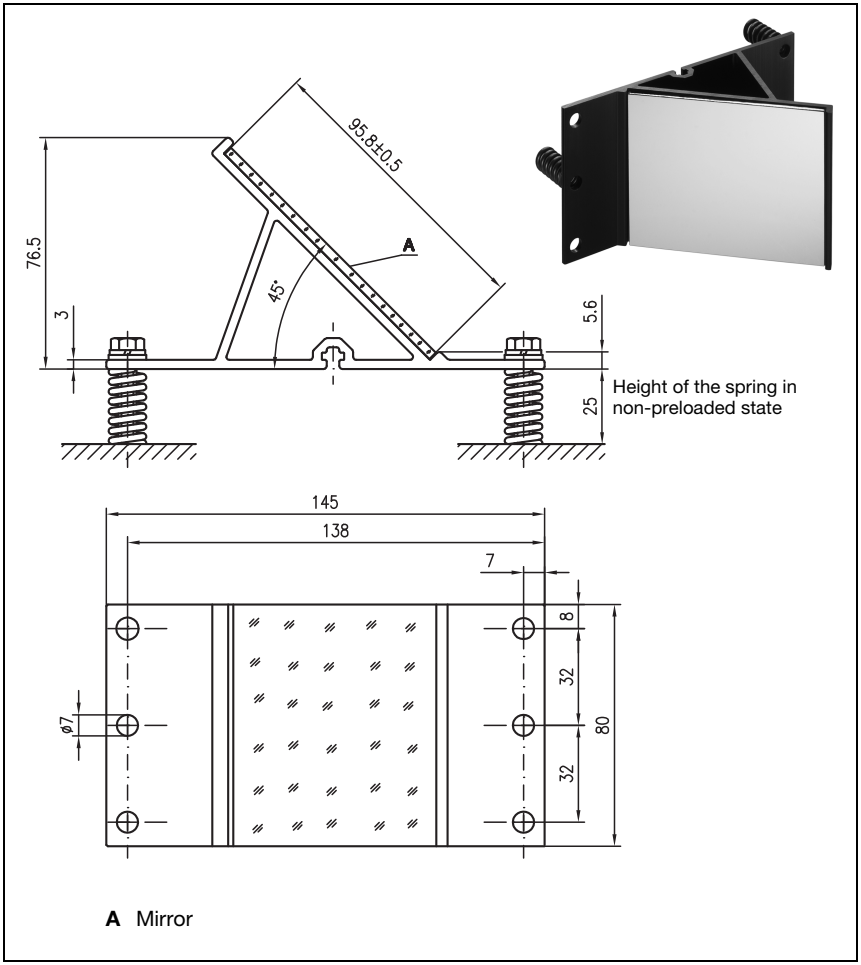

Figure 5.7: Photo and dimensioned drawing of the US 1 OMS deflector unit

Alignment of the laser light spot on the reflector is performed as described in chapter 5.2.

6 Reflectors

6.1 General information

The AMS 348*i* measures distances against a reflective tape specified by Leuze electronic. All provided specifications for the AMS 348*i*, such as the operating range or accuracy, can only be achieved with the reflective tape specified by Leuze electronic.

The reflective tapes are available as adhesive tapes, affixed to a metal plate and with an integrated heater especially for use at low temperatures. Reflective tapes with heating have the designation "**Reflective tape ...x...-H**", where "**H**" is an abbreviation for the heating variant.

The reflective tapes/reflectors must be ordered separately. The choice of size is left to the user. In chapter 6.3, recommendations on reflector size are provided as a function of the distance that is to be measured. In any case, the user must check to determine whether the recommendation is suitable for the respective application.

6.2 Description of the reflective tape

The reflective tape consists of a white, microprism-based reflective material. The microprisms are protected with a highly transparent, hard protective layer.

Under certain circumstances, the protective layer may lead to surface reflections. The surface reflections can be directed past the AMS 348*i* by positioning the reflective tape at a slight incline. The inclination of the reflective tape/reflectors is described in chapter 6.4.2. The required pitch can be found in table 6.1 "Reflector pitch resulting from spacer sleeves" on page 36.

The reflective tapes are provided with a protective foil that can easily be pulled off. This must be removed from the reflector before the complete system is put into operation.

6.2.1 Specifications of the self-adhesive foil

	Part		
Type designation	**Reflective tape 200x200-S**	**Reflective tape 500x500-S**	**Reflective tape 914x914-S**
Part no.	50104361	50104362	50108988
Foil size	200x200mm	500x500mm	914x914mm
Recommended application temperature for adhesive tape	+5°C … +25°C		
Temperature resistance, affixed	-40°C … +80°C		
Mounting surface	The mounting surface must be clean, dry and free of grease.		
Cutting the tape	Cut with a sharp tool, always on the side of the prism structure.		
Cleaning	Do not use any agents that act with a grinding effect. A conventional household detergent can be used as a cleaning agent. Rinse with clear water and dry the surface.		
Storing the foil	Store in a cool and dry place.		

6.2.2 Specifications of the reflective tape on a support plate

The reflective tape is affixed to a support plate. Included with the support plate are spacers for positioning at an incline - for avoiding surface reflections - (see chapter 6.4.2 "Mounting the reflector").

	Part		
Type designation	**Reflective tape 200x200-M**	**Reflective tape 500x500-M**	**Reflective tape 914x914-M**
Part no.	50104364	50104365	50104366
Foil size	200x200mm	500x500mm	914x914mm
Outer dimensions of the support plate	250x250mm	550x550mm	964x964mm
Weight	1.2kg	2.8kg	25kg
Cleaning	Do not use any agents that act with a grinding effect. A conventional household detergent can be used as a cleaning agent. Rinse with clear water and dry the surface.		
Storing the reflector	Store in a cool and dry place.		

6.2.3 Dimensioned drawing of reflective tape on a support plate

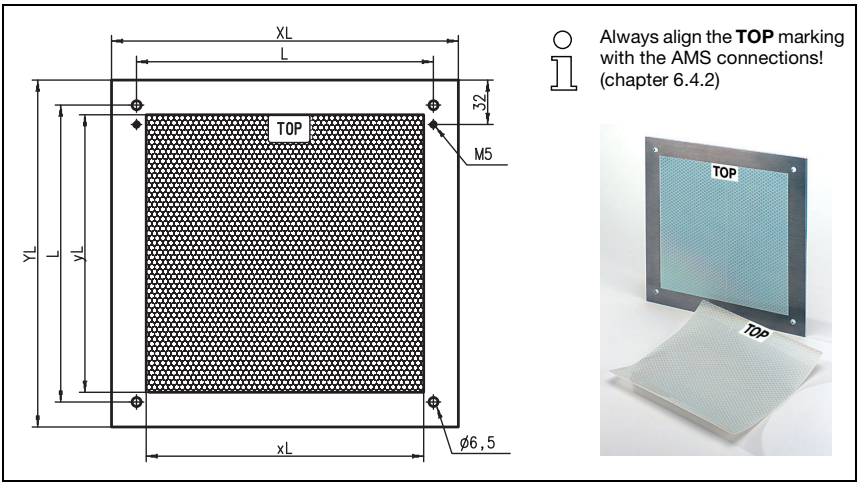

Figure 6.1: Dimensioned drawing of reflectors

Part	Reflective tape (mm)		Reflector plate (mm)		
	xL	yL	XL	YL	L
Reflective tape 200x200-M	200	200	250	250	214
Reflective tape 500x500-M	500	500	550	550	514
Reflective tape 914x914-M	914	914	964	964	928

6.2.4 Specifications of heated reflectors

The reflective tape is affixed to a heated, thermally insulated base. The insulation results in a very high energetic efficiency.

Only the reflective tape is kept at the specified temperature by the integrated heater. Through the insulation on the back, the generated heat cannot be transferred via the steel construction. Energy costs are greatly reduced in the case of continuous heating.

	Part		
Type designation	**Reflective tape 200x200-H**	**Reflective tape 500x500-H**	**Reflective tape 914x914-H**
Part no.	50115020	50115021	50115022
Voltage supply	230VAC		
Power	100W	600W	1800W
Current consumption	~ 0.5A	~ 3A	~ 8A
Length of the supply line	2 m		
Size of the reflective tape	200x200mm	500x500mm	914x914mm
Outer dimensions of the base material	250x250mm	550x550mm	964x964mm
Weight	0.5kg	2.5kg	12kg
Temperature control	Controlled heating with the following switch-on and switch-off temperatures, measured at the reflector surface.		
Switch-on temperature	~ 5°C		
Switch-off temperature	~ 20°C		
Operating temperature	-30°C … +70°C		
Storage temperature	-40°C … +80°C		
Air humidity	Max. 90%, non-condensing.		
Cleaning	Do not use any agents that act with a grinding effect. A conventional household detergent can be used as a cleaning agent. Rinse with clear water and dry the surface.		
Storing the reflector	Store in a cool and dry place.		

6.2.5 Dimensioned drawing of heated reflectors

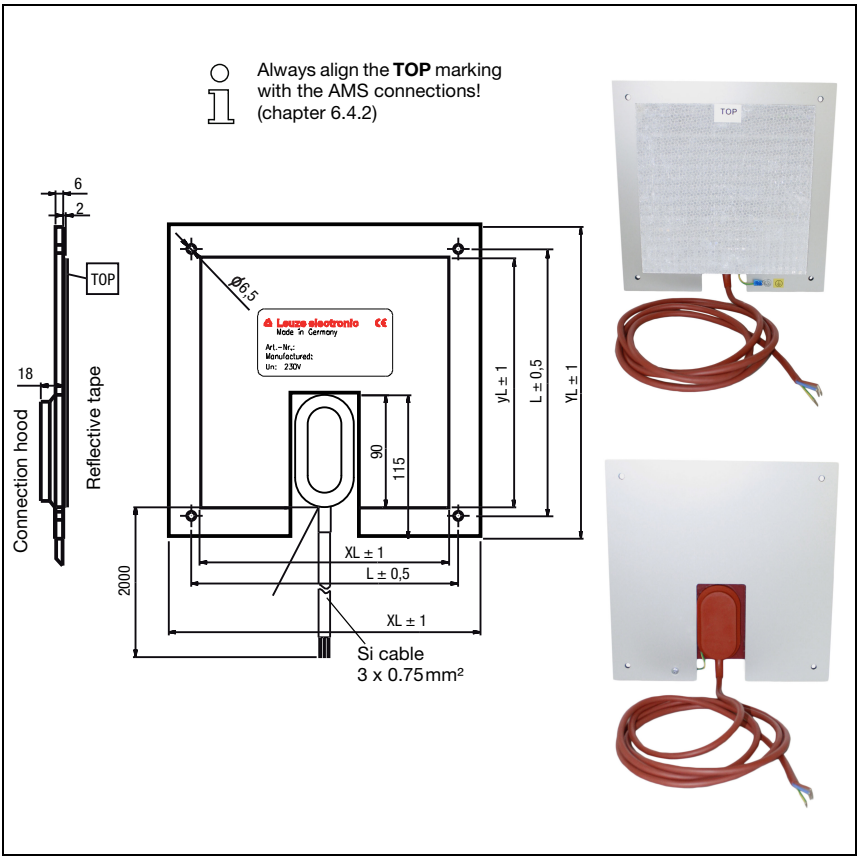

Figure 6.2: Dimensioned drawing of heated reflectors

Part	Reflective tape (mm)		Insulated base plate (mm)		
	xL	yL	XL	YL	L
Reflective tape 200x200-H	200	200	250	250	214
Reflective tape 500x500-H	500	500	550	550	514
Reflective tape 914x914-H	914	914	964	964	928

6.3 Selecting reflector sizes

Depending on system design, the reflector can be mounted so that it travels on the vehicle or it can be mounted at a fixed location.

Attention!

The reflector sizes shown below are a recommendation from Leuze electronic for on-vehicle mounting of the AMS 348i. For stationary mounting of the AMS 348i, a smaller reflector is generally sufficient for all measurement distances.
On the basis of the system planning and design, always check whether mechanical travel tolerances may require the use of a reflector larger than that which is recommended. This applies, in particular, when the laser measurement system is mounted on a vehicle. During travel, the laser beam must reach the reflector without interruption. For on-vehicle mounting of the AMS 348i, the reflector size must accommodate any travel tolerances that may arise and the associated "wandering" of the light spot on the reflector.

Overview of reflector types

Recommended reflector sizes			
AMS 348*i* selection (Operating range in m)	**Recommended reflector size (H x W)**	**Type designation …-S = Self-adhesive …-M = metal plate …-H = heating**	**Part no.**
AMS 348*i* 40 (**max. 40m**)	200x200mm	Reflective tape 200x200-S Reflective tape 200x200-M Reflective tape 200x200-H	50104361 50104364 50115020
AMS 348*i* 120 (**max. 120m**)	500x500mm	Reflective tape 500x500-S Reflective tape 500x500-M Reflective tape 500x500-H	50104362 50104365 50115021
AMS 348*i* 200 (**max. 200m**)	749x914mm 914x914mm	Reflective tape 749x914-S Reflective tape 914x914-M Reflective tape 914x914-S Reflective tape 914x914-H	50104363 50104366 50108988 50115022
AMS 348*i* 300 (**max. 300m**)	749x914mm 914x914mm	Reflective tape 749x914-S Reflective tape 914x914-M Reflective tape 914x914-S Reflective tape 914x914-H	50104363 50104366 50108988 50115022

6.4 Mounting the reflector

6.4.1 General information

Self-adhesive reflective tapes

The reflective tapes of the "Reflective tape …x…**-S**" self-adhesive series must be affixed to a flat, clean and grease-free surface. We recommend using a separate metal plate, which is to be provided on-site.

As described in table 6.1, the reflective tape must be angled.

Reflective tapes on support plate

The reflective tapes of the "Reflective tape …x…**-M**" series are provided with corresponding mounting holes. Spacer sleeves are provided in the packet for achieving the necessary pitch angle. For further information see table 6.1.

Heated reflectors

The reflective tapes of the "Reflective tape ...x...**-H**" series are provided with corresponding mounting holes. Due to the voltage supply affixed on the rear, the reflector cannot be mounted flat. Included in the package are four distance sleeves in two different lengths. Use the distance sleeves to achieve a base separation to the wall as well as the necessary pitch for avoiding surface reflection. For further information see table 6.1.

The reflector is provided with a 2m-long connection cable for supplying with 230VAC. Connect the cable to the closest power outlet. Observe the current consumptions listed in the specifications.

Attention!

Connection work must be carried out by a certified electrician.

6.4.2 Mounting the reflector

The combination of laser measurement system and reflective tape/reflector is mounted so that the laser light spot hits the tape as centered as possible and without interruption.

For this purpose, use the alignment elements provided on the AMS 348*i*… (see chapter 5.2 "Mounting the AMS 348i"). If necessary, remove the protective foil from the reflector.

Attention!

The "TOP" label mounted on the reflectors should be aligned the same as the connections of the AMS 348*i*.

Example:

If the AMS 348i is mounted so that the M12 connections are on the top, the "TOP" label of the reflector is also on the top. If the AMS 348i is mounted so that the M12 connections are on the side, the "TOP" label of the reflector is also on the side.

Notice!

The reflector must be angled. To do this, use the spacer sleeves. Angle the reflectors so that the ***surface reflections of the foil seal are deflected to the left, right, upwards or downwards****, chapter 6.4.3 gives the correct pitch with respect to the reflector size and, thus, the length of the spacers.*

Reflective tapes …-S and …-M

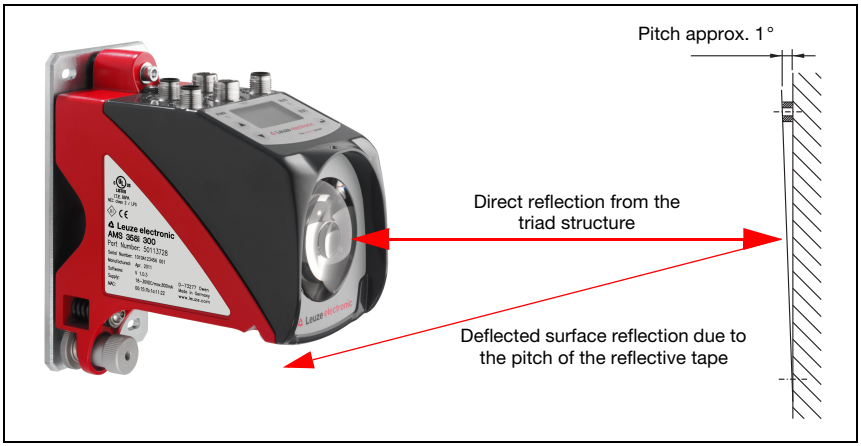

Figure 6.3: Reflector mounting

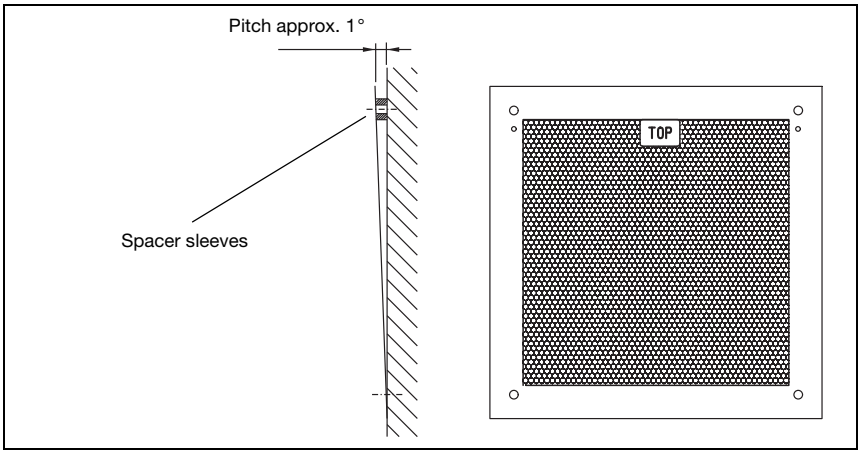

Figure 6.4: Pitch of the reflector

Reflective tapes ...-H

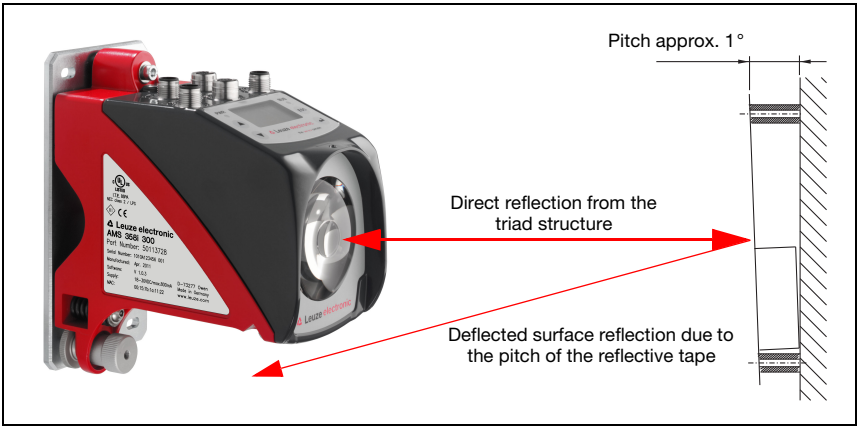

Figure 6.5: Mounting of heated reflectors

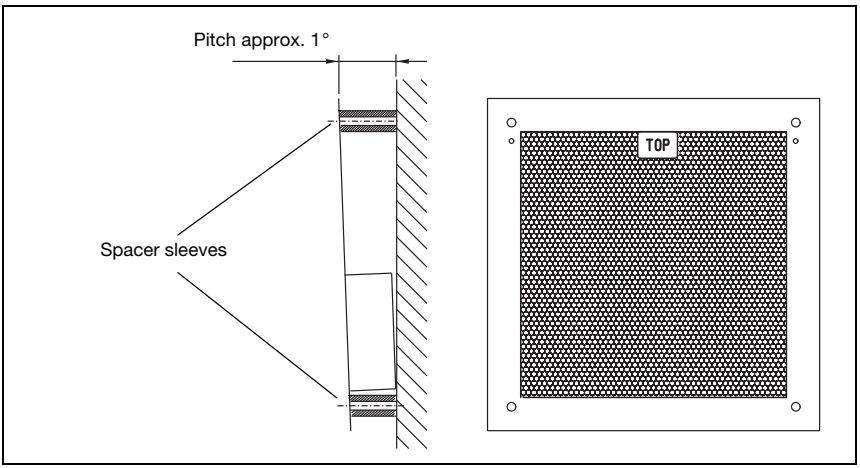

Figure 6.6: Pitch of the heated reflector

6.4.3 Table of reflector pitches

Reflector type	Pitch resulting from spacer sleeves [1]	
Reflective tape 200x200-S Reflective tape 200x200-M	**2 x 5mm**	
Reflective tape 200x200-H	**2 x 15mm**	**2 x 20mm**
Reflective tape 500x500-S Reflective tape 500x500-M	**2 x 10mm**	
Reflective tape 500x500-H	**2 x 15mm**	**2 x 25mm**
Reflective tape 749x914-S	**2 x 20mm**	
Reflective tape 914x914-S Reflective tape 914x914-M	**2 x 20mm**	
Reflective tape 914x914-H	**2 x 15mm**	**2 x 35mm**

1) Spacer sleeves are included in the delivery contents of reflective tape …-**M** and …-**H**

Table 6.1: Reflector pitch resulting from spacer sleeves

Notice!

Reliable function of the AMS 348i and, thus, max. operating range and accuracy can only be achieved with the reflective tape specified by Leuze electronic. No function can be guaranteed if other reflectors are used!

7 Electrical connection

The AMS 348*i* laser measurement systems are connected using variously coded M12 connectors. This ensures unique connection assignments.

Notice!

The corresponding mating connectors and ready-made cables are available as accessories for all cables. For further information, see chapter 11 "Type overview and accessories".

Figure 7.1: Connections of the AMS 348*i*

7.1 Safety notices for the electrical connection

Attention!

Before connecting the device, be sure that the supply voltage agrees with the value printed on the name plate.
The device may only be connected by a qualified electrician.
Ensure that the functional earth (FE) is connected correctly. Unimpaired operation is only guaranteed when the functional earth is connected properly.
If faults cannot be corrected, the device should be removed from operation and protected against possible use.

Attention!

For UL applications, use is permitted exclusively in Class 2 circuits according to NEC (National Electric Code).

The laser measurement systems are designed in accordance with safety class III for supply by PELV (protective extra-low voltage with reliable disconnection).

Notice!

Protection class IP65 is achieved only if the connectors and caps are screwed into place!

Described in detail in the following are the individual connections and pin assignments.

7.2 PWR – voltage supply / switching input/output

PWR (5-pin plug, A-coded)			
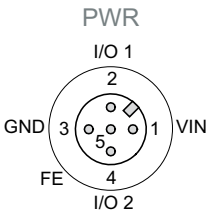 **M12 plug (A-coded)**	**Pin**	**Name**	**Remark**
	1	VIN	Positive supply voltage +18 … +30VDC
	2	I/O 1	Switching input/output 1 (see also module 4/5)
	3	GND	Negative supply voltage 0VDC
	4	I/O 2	Switching input/output 2 (see also module 4/5)
	5	FE	Functional earth
	Thread	FE	Functional earth (housing)

Table 7.1: Pin assignment PWR

Further information on configuring the input/output can be found in chapter 8 and chapter 9.

7.3 PROFINET BUS IN

BUS IN (4-pin socket, D-coded)			
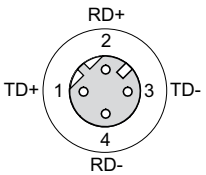 **M12 socket (D-coded)**	**Pin**	**Name**	**Remark**
	1	TD+	Transmit Data +
	2	RD+	Receive Data +
	3	TD-	Transmit Data -
	4	RD-	Receive Data -
	Thread	FE	Functional earth (housing)

Table 7.2: Pin assignments for BUS IN

7.4 PROFINET BUS OUT

BUS OUT (4-pin socket, D-coded)			
BUS OUT 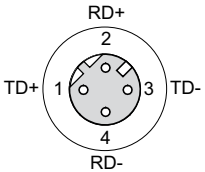 **M12 socket (D-coded)**	**Pin**	**Name**	**Remark**
	1	TD+	Transmit Data +
	2	RD+	Receive Data +
	3	TD-	Transmit Data -
	4	RD-	Receive Data -
	Thread	FE	Functional earth (housing)

Table 7.3: Pin assignment BUS OUT

7.5 Service

Service (5-pin socket, A-coded)			
SERVICE 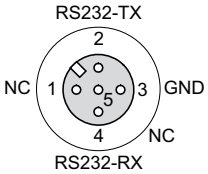 **M12 socket (A-coded)**	**Pin**	**Name**	**Remark**
	1	NC	Not used
	2	RS232-TX	Transmission line RS 232/service data
	3	GND	Voltage supply 0VDC
	4	RS232-RX	Receiving line RS 232/service data
	5	NC	Not used
	Thread	FE	Functional earth (housing)

Table 7.4: Service pin assignments

Notice!

The service interface is designed only for use by Leuze electronic!

8 Display and control panel AMS 348*i*

8.1 Structure of the control panel

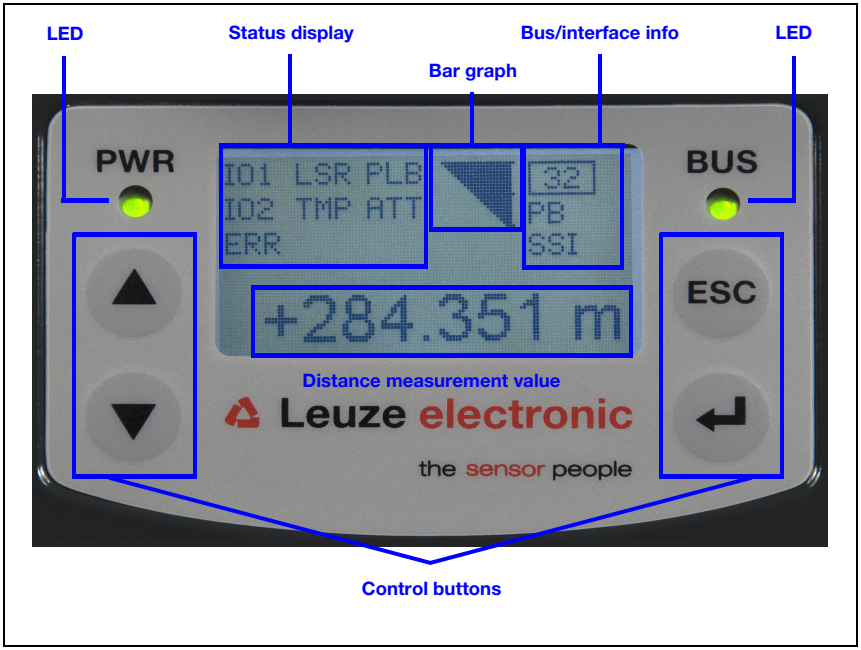

Figure 8.1: Structure of the control panel using the AMS 304*i* PROFIBUS device variant as an example

Notice!

The figure is for illustration purposes only and does not correspond to AMS 348i with respect to bus/interface info.

8.2 Status display and operation

8.2.1 Indicators in the display

Status and warning messages in the display

IO1 **Input 1 or output 1 active:**
Function depending on configuration.

IO2 **Input 2 or output 2 active:**
Function depending on configuration.

LSR **Warning - laser prefailure message:**
Laser diode old, device still functional, exchange or have repaired.

TMP **Warning - temperature monitoring:**
Permissible internal device temperature exceeded / not met.

PLB **Plausibility error:**
Implausible measurement value. Possible causes: light beam interruption, outside of measurement range, permissible internal device temperature considerably exceeded or traverse rate >10m/s.

Depending on the configuration, either zero or the last valid measurement value is output at the interfaces.

ATT **Warning received signal:**
Laser outlet window or reflector soiled or fogged by rain, water vapor or fog. Clean or dry surfaces.

ERR **Internal hardware error:**
The device must be sent in for inspection.

Bar graph

Indicates the **strength of the received laser light**.

The center bar represents the **ATT** warning threshold. The distance value remains valid and is output at the interfaces.

If no bar graph is available, the **PLB** status information appears at the same time.

The measurement value has thus been assessed as being implausible. Depending on the configuration, either zero or the last valid measurement value is output at the interfaces.

Interface info

"LNK0" and "LNK1" in the display indicate an existing EtherNet connection for BUS IN and BUS OUT. If the status info "LNK0" or "LNK1" is not displayed although the data line is connected, the connection is faulty.

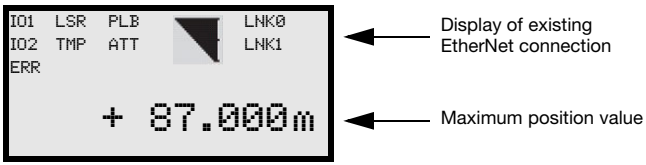

The connection status is additionally signaled by a green/orange multicolor LED below the BUS IN and BUS OUT plug connector, see chapter "LINK LED for BUS IN and BUS OUT".

Maximum position value

The measured position value is displayed in the configured unit of measurement.

`+87.000m` With the **metric** setting, the measurement value is always displayed in meters with **three decimal places**.

`+87.0in` With the **inch** setting, the measurement value is always displayed in inches with **one decimal place**.

8.2.2 LED status displays

PWR LED

PWR	**Off**	**Device OFF** - No supply voltage
PWR	**Flashing green**	**Power LED flashes green** - No measurement value output - Voltage connected - Self test running - Initialization running - Parameter download running - Boot process running
PWR	**Green continuous light**	**Power LED green** - AMS 348*i* ok - Measurement value output - Self test successfully finished - Device monitoring active
PWR	**Red flashing**	**Power LED flashes red** - Device ok but warning message (ATT, TMP, LSR) set in display - Light beam interruption - Plausibility error (PLB)
PWR	**Red continuous light**	**Power LED red** - No measurement value output; for details, see Display
PWR	**Orange flashing**	**Power LED flashes orange** - PROFINET wave function

PWR	**Orange continuous light**	**Power LED orange** - Configuration via the display - No data on the host interface

BUS LED

BUS	**Off**	**BUS LED off** - No supply voltage (Power) - No communication possible - PROFINET communication not initialized or inactive
BUS	**Flashing green**	**BUS LED flashes green** - Initialization of the AMS 348*i*, establishing communication
BUS	**Green continuous light**	**BUS LED green** - Network operation ok - Connection and communication to controller (PLC) established ("data exchange")
BUS	**Red flashing**	**BUS LED flashes red** - Bus error, communication error - Parameterization or configuration failed ("parameter failure") - IO error - No data exchange
BUS	**Red continuous light**	**BUS LED red** - Bus error, network error - No communication (protocol) to Controller established ("no data exchange")
BUS	**Orange flashing**	**BUS LED flashes orange** - PROFINET wave function -

LINK LED for BUS IN and BUS OUT

A green/orange multicolor LED below the BUS IN and BUS OUT connectors indicates the EtherNet/PROFINET connection status.

	Green continuous light	**LINK LED green** - The link exists, the hardware connection to the next connected participant is OK. The LED signals the same status as "LNK0" and "LNK1" in the display.
	Orange flashing	**LINK LED flashes orange (ACT0/ACT1)** - Data is exchanged with the connected participants.

8.2.3 Control buttons

▲	**Up**	Navigate upward/laterally.
▼	**Down**	Navigate downward/laterally.
ESC	**ESC**	Exit menu item.
↵	**ENTER**	Confirm/enter value, change menu levels.

Navigating within the menus

The menus within a level are selected with the up/down buttons ▲ ▼.

The selected menu item is activated with the enter button ↵.
Press the ESC button ESC to move up one menu level.
When one of the buttons is actuated, the display illumination is activated for 10 min.

Setting values

If input of a value is possible, the display looks like this:

```
100
        <-l0123456789  save
    Default ---------------- unit
126          |    |
```

4 + ↵	Delete character
0...9 + ↵	Enter digit
save + ↵	Save

Use the ▲ ▼ and ↵ buttons to set the desired value. An accidental, incorrect entry can be corrected by selecting <-l and then pressing ↵.

Then use the ▲ ▼ buttons to select Save and save the set value by pressing ↵.

Selecting options

If options can be selected, the display looks like this:

```
o OFF
  ON
   Default ---------------- unit
  OFF        |    |
```

Select the desired option with the ▲ ▼ buttons. Activate the option by pressing ↵.

8.3 Menu description

8.3.1 The main menus

After voltage has been applied to the laser, device information is displayed for several seconds. The display then shows the measurement window with all status information.

```
AMS 348i 120
Leuze electronic
          GmbH & Co. KG
SW: V 1.3.0   HW:1
SN: ---------------
```

Device information - main menu

This menu item contains detailed information on

- Device model,
- Manufacturer,
- Software and hardware version,
- Serial number.

No entries can be made via the display.

▲ ▼

```
Network information
Address:      ---.---.---.---
Net mask:     ---.---.---.---
Gateway:      ---.---.---.---
MAC ID:       --.--.--.--.--.--
DevName:      ------------------------
```

Network information - main menu

- Display of the network settings.

No entries can be made via the display.

▲ ▼

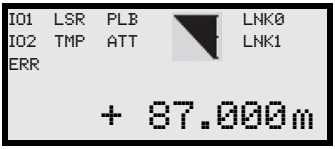

Status and measurement data - main menu

- Display of status-, warning-, and error messages
- Status overview of the switching inputs/outputs.
- Bar graph for the reception level.
- Link.
- Measurement value.

No entries can be made via the display.
See "Indicators in the display" on page 40.

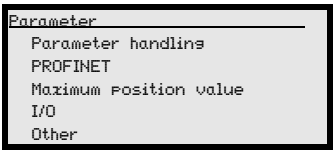

Parameter - main menu

- Configuration of the AMS.

See "Parameter menu" on page 47.

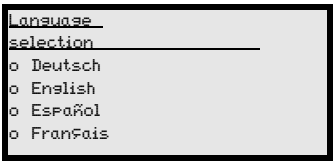

Language selection - main menu

- Selection of the display language.

See "Language selection menu" on page 50.

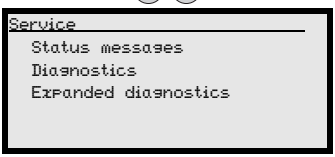

Service - main menu

- Display of status messages.
- Display of diagnostic data.

No entries can be made via the display.
See "Service menu" on page 50.

Notice!

The rear cover *of this manual includes a* ***fold-out page*** *with the complete* ***menu structure****. It describes the menu items in brief.*

A detailed description of the individual parameters can be found in the description of the PROFINET GSD modules (see chapter 9.9.2 "Overview of the GSD modules").

Attention!

If parameters are changed via the display during bus operation, the AMS 348i is separated from the PROFINET at the moment parameter enabling is activated via the display. Parameters set by the PROFINET are moved to the background, and changes to parameters can be made via the display. When parameter enabling is exited, the AMS 348i is automatically reconnected to the PROFINET. Upon connection to the PROFINET, the AMS 348i receives all parameters from the PROFINET Controller (PLC).

Changes made via the display are overwritten!
Device settings for operating the AMS 348i on the PROFINET are managed and configured exclusively by the PROFINET Controller (PLC).

8.3.2 Parameter menu

Parameter handling submenu

The following functions can be called up in the Parameter handling submenu:

- Lock and enable parameter entry
- Set up a password
- Reset the AMS 348*i* to default settings.

Table 8.1: Parameter handling submenu

Level 3	Level 4	Level 5	Selection/configuration option Description	Standard
Parameter enabling			ON / OFF The standard setting (OFF) prevents unintended parameter changes. With parameter enabling activated (ON), the display is inverted. In this state, it is possible to change parameters manually. As long as parameter enabling is activated, the AMS 348*i* is disconnected from the PROFINET.	OFF
Password	Activate password		ON / OFF To enter a password, parameter enabling must be activated. If a password is assigned, changes to the AMS 348*i* can only be made after the password is entered. The master password 2301 bridges the individually set password.	OFF
	Password entry		Configuration option of a four-digit numerical password	
Parameters to default			By pressing the enter button ↵ after selecting Parameters to default, all parameters are reset to their standard settings without any further security prompts. In this case, English is selected as the display language.	

Additional important information on parameter handling can be found at the end of the chapter.

PROFINET submenu

Table 8.2: PROFINET submenu

Level 3	Level 4	Level 5	Selection/configuration option Description	Standard
Activation			ON / OFF Activates or deactivates the AMS 348*i* as an PROFINET participant. If the AMS 348*i* is deactivated as a PROFINET participant, all subsequent participants connected via the internal switch (Bus OUT) continue to be active.	ON

Position value submenu

Notice!

The parameters mentioned in the "Position value", "I/O" and "Other" sub-menus must be set via the GSDML file of the AMS 348*i*. For test purposes, the parameters can be changed directly on the AMS 348*i* via the display structure described below. After deactivation of the

parameter enable, however, the parameters stored in the GSDML file continue to be valid. The parameters changed directly on the AMS 348*i* for test purposes are overwritten again.

Table 8.3: Position value submenu

Level 3	Level 4	Level 5	Selection/configuration option Description	Standard
Measurement unit			Metric/Inch Specifies the units of the measured distances	Metric
Count direction			Positive/Negative Positive: The measurement value begins at 0 and increases with increasing distance. Negative: The measurement value begins at 0 and decreases with increasing distance. Negative distance values may need to be compensated with an offset or preset.	Positive
Offset			Output value=measurement value+offset. The resolution of the offset value is independent of the selected "Resolution position" and is entered in mm or inch/100. The offset value is effective immediately following entry. If the preset value is activated, this has priority over the offset. Preset and offset are not offset against each other.	0 mm
Preset			The preset value is accepted by means of teach pulse. The teach pulse can be applied to a hardware input of the M12 PWR connector. The hardware input must be appropriately configured. See also configuration of the I/Os.	0 mm
Free resolution value			The measurement value can be resolved in increments of 1/1000 within the 5 … 50000 value range. If, e.g., a resolution of 0.875 mm per digit is required, the parameter is set to 875.	1000
Error delay			ON / OFF Specifies whether, in the event of an error, the position value immediately outputs the value of the "Position value in the case of error" parameter or the last valid position value for the configured error delay time.	ON/100 ms
Position value in the case of error			Last valid value / zero Specifies which position value is output after the error delay time elapses.	Zero

I/O submenu

Table 8.4: I/O submenu

Level 3	Level 4	Level 5	Selection/configuration option Description	Standard
I/O 1	Port configuration		Input/Output Defines whether I/O 1 functions as an output or input.	Output
	Switching input	Function	No function/preset teach/laser ON/OFF	No function
		Activation	Low active/High active	Low active
	Switching output	Function	Pos. limit value 1 / Pos. limit value 2 / Velocity / Intensity (ATT) / Temp. (TMP) / Laser (LSR) / Plausibility (PLB) / Hardware (ERR) The individual functions are "ORed" on the selected switching output.	Plausibility (PLB), hardware (ERR)
		Activation	Low active/High active	Low active
I/O 2	Port configuration		Input/Output Defines whether I/O 2 functions as an output or input.	Output

Table 8.4: I/O submenu

Level 3	Level 4	Level 5	Selection/configuration option Description	Standard
	Switching input	Function	No function/preset teach/laser ON/OFF	No function
		Activation	Low active/High active	Low active
	Switching output	Function	Pos. limit value 1 / Pos. limit value 2 / Velocity / Intensity (ATT) / Temp. (TMP) / Laser (LSR) / Plausibility (PLB) / Hardware (ERR) The individual functions are "ORed" on the selected switching output.	Intensity (ATT), Temp. (TMP), Laser (LSR)
		Activation	Low active/High active	Low active
Limit values	Upper pos. limit 1	Activation	ON / OFF	OFF
		Limit value input	Value input in mm or inch/100	0
	Lower pos. limit 1	Activation	ON / OFF	OFF
		Limit value input	Value input in mm or inch/100	0
	Upper pos. limit 2	Activation	ON / OFF	OFF
		Limit value input	Value input in mm or inch/100	0
	Lower pos. limit 2	Activation	ON / OFF	OFF
		Limit value input	Value input in mm or inch/100	0
	Max. velocity	Activation	ON / OFF	OFF
		Max. velocity	Value input in mm/s or inch/100s	0

Other submenu

Table 8.5: Other submenu

Level 3	Level 4	Level 5	Selection/configuration option Description	Standard
Heating control			Standard (10°C … 15°C)/Extended (30°C … 35°) Defines a switch-on/switch-off range for the heating control. The extended switch-on/switch-off range for heating may provide relief in the event of condensation problems. There is no guarantee that no condensation will occur on the optics in the extended switch-on/switch-off range due to the limited heating capacity. This parameter is available as standard, but functions only for devices with integrated heating (AMS 348*i*… **H**).	Standard
Display illumination			10 minutes/ON Display illumination is switched off after 10 minutes or, if the parameter is set to "ON", illumination is always on.	10 min.
Display contrast			Weak/Medium/Strong The display contrast may change at extreme temperature values. The contrast can subsequently be adapted using the three levels.	Medium

Table 8.5: Other submenu

Level 3	Level 4	Level 5	Selection/configuration option Description	Standard
Service RS232	Baud rate		57.6 kbit/s / 115.2 kbit/s The service interface is only available to Leuze internally.	115.2 kbit/s
	Format		8,e,1 / 8,n,1 The service interface is only available to Leuze internally.	8,n,1

8.3.3 Language selection menu

```
Language
selection
o Deutsch
● English
o Español
o Français
```

There are 5 display languages available:

- German
- English
- Spanish
- French
- Italian

The AMS 348*i* is delivered from the factory with the display preset to English.

Notice!

When operating the AMS 348i on the PROFINET, the language configured in the GSD file is used in the display.

To change the language, no password needs to be entered nor must password enabling be activated. The display language is a passive operational control and is, thus, not a function parameter, per se.

8.3.4 Service menu

```
Service
 Status messages
 Diagnostics
 Expanded diagnostics
```

A more detailed description of the individual functions can be found in chapter 10.

8.4 Operation

Described here is an operating process using parameter enabling as an example.

Parameter enabling

During normal operation parameters can only be viewed. If parameters are to be changed, the ON menu item in the Parameter -> Parameter handling -> Parameter enable menu must be activated. To do this, proceed as follows:

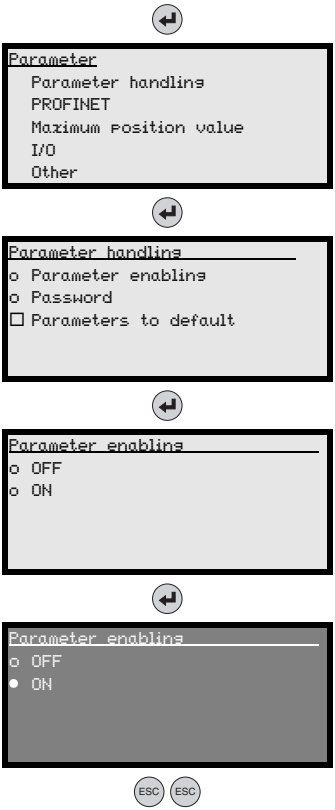

In the main menu, press the enter button to enter the Parameter menu.

Use the ▲ ▼ buttons to select the Parameter handling menu item.

Press the enter button to enter the Parameter handling menu.

In the Parameter handling menu, use the ▲ ▼ buttons to select the Parameter enabling menu item.

Press the enter button to enter the Parameter enabling menu.

In the Parameter enabling menu, use the ▲ ▼ buttons to select the ON menu item.

Press the enter button to switch on parameter enabling.

The PWR LED illuminates orange; the display is inverted. You can now set the individual parameters on the display.

Press the ESC button twice to return to the Parameter menu.

Viewing and editing parameters

As long as parameter enabling is activated, the entire AMS 348*i* display is inverted.

As long as parameter enabling is activated, communication between control and AMS 348*i* is interrupted. The continued networking via BUS OUT is retained.

Attention!

The AMS 348i is deactivated on the PROFINET if parameter enabling is activated via the display. The device is reactivated on the PROFINET after parameter enabling is exited.

Notice!

In the PROFINET network, configuration is performed exclusively via the PROFINET Controller.

Parameters set via the display when operating the AMS 348i on the PROFINET are overwritten by the parameters set in the GSD modules. For GSD modules which are not actively used on the PROFINET, the default settings of the AMS, see "Overview of the GSD modules" on page 69. Thus, the PROFINET presets values to all parameters.

Notice!

If a password was stored, parameter enabling is not possible until this password is entered, see "Password for parameter enabling" below.

Password for parameter enabling

Notice!

*The **master password 2301** can enable the AMS 348i at any time.*

9 PROFINET interface

9.1 General information on PROFINET

The AMS 348*i* is designed as a PROFINET-RT (Real Time) device (acc. to IEEE 802.3). It supports a transmission rate of up to 100 Mbit/s (100Base TX/FX), full duplex, as well as auto-negotiation and auto-crossover.

The functionality of the device is defined via parameter sets which are organized in modules. The modules form part of the GSD file.

Each AMS 348*i* has a unique MAC-ID which is described on the name plate. This is linked to an IP address during the course of configuration. In the Simatic Manager for creation of PROFINET networks, the IP address is also linked to a freely selectable device name which may only exist once in the network (see chapter 9.8.4.3 "Step 3 – Hardware configuration of the S7 PLC: Configuration").

9.2 Identification & Maintenance Functions

The AMS 348*i* supports the base record I&M0:

Contents	Index	Data type	Description	Value
Header	0	10 bytes	Manufacturer specific	-
MANUFACTURER_ID	10	UNSIGNED16	Leuze manufacturer ID	338
ORDER_ID	12	ASCII string 20 bytes	Leuze order no.	-
SERIAL_NUMBER	32	ASCII string 16 bytes	Unique device serial number	Device-dependent
HARDWARE_REVISION	48	UNSIGNED16	Hardware revision number, e.g., "0…65535"	Device-dependent
SOFTWARE_REVISION	50	1xCHAR, 3xUNSIGNED8	Software version number, e.g. V130 correspond to "V1.3.0"	Device-dependent
REVISION_COUNTER	54	UNSIGNED16	Is incremented when updating individual modules. This function is not supported.	0
PROFILE_ID	56	UNSIGNED16	PROFINET application profile number	0xF600 (Generic Device)
PROFILE_SPECIFIC_TYPE	58	UNSIGNED16	Info about subchannels and submodules. Not relevant	0x01,0x01
IM_VERSION	60	2xUNSIGNED8	Implemented I&M version V 1.1	0x01,0x01
IM_SUPPORTED	62	Bit[16]	Optional I&M records available	4

Table 9.1: Base record I&M0

9.3 PROFINET – star topology

The AMS 348*i* can be operated as a single device (standalone) with an individual device name in a star topology. The PLC must communicate this device name to the participant during the "device naming".

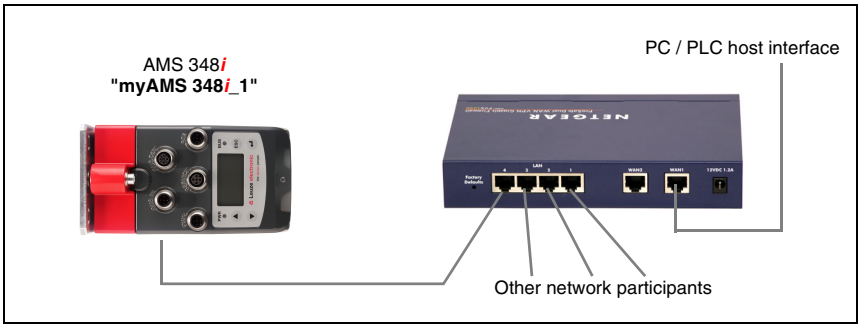

Figure 9.1: PROFINET in a star topology

9.4 PROFINET – linear topology

The innovative further development of the AMS 348*i* with integrated switch functionality offers the option of connecting multiple laser measurement systems of type AMS 348*i* to one another without direct connection to a switch. In addition to the classic "star topology", a "linear topology" is thus also possible.

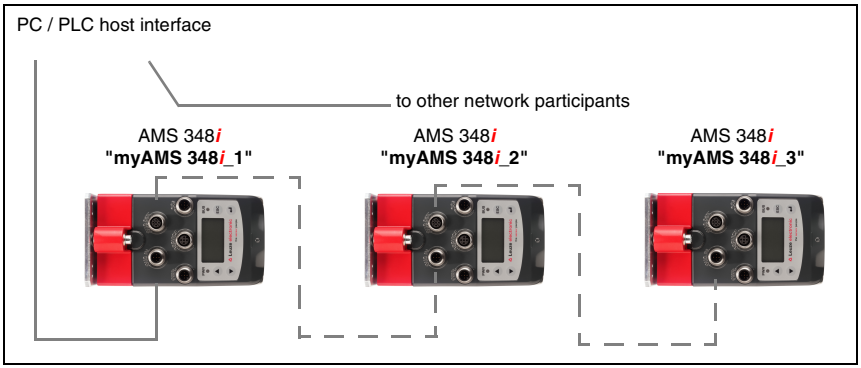

Figure 9.2: PROFINET in a linear topology

The maximum length of a segment (from the host to the furthest participant) is limited to 100 m.

9.5 PROFINET – General information on wiring

A Cat. 5 Ethernet cable should be used for wiring.

For the connection technology transition from M12 to RJ45, a "KDS ET M12 / RJ 45 W - 4P" adapter is available that lets you connect standard network cables.

If no standard network cables are to be used (e.g. due to lacking IP… protection class), you can use the "KS ET-M12-4A-P7-…" ready-made cable on the AMS 348*i*, see table 11.4.5 "Accessory ready-made cables for PROFINET" on page 105.

The individual AMS 348*i* devices in a linear topology are connected with the "KSS ET-M12-4A-M12-4A-P7-…" cable, see table 11.4.5 "Accessory ready-made cables for PROFINET" on page 105.

For unavailable cable lengths, you can configure your cables yourself. For this purpose, Leuze electronic offers a D-coded M12 round plug connector for Bus IN and Bus Out, see table 11.4.3 "Accessory M12 connector" on page 103.

9.6 PROFINET – Cable lengths and shielding

↳ *Observe the following maximum cable lengths and shielding types:*

Connection	Interface	Max. cable length	Shielding
AMS – host	PROFINET-RT	100 m	Absolutely required
Network from the first AMS to the last AMS	PROFINET-RT	The maximum segment length must not exceed 100 m for 100Base-TX Twisted Pair (min. Cat. 5)	Absolutely required

Table 9.2: Cable lengths and shielding

9.7 PROFINET - Electrical connection

BUS IN (4-pin socket, D-coded)		
Pin	**Name**	**Remark**
1	TD+	Transmit Data +
2	RD+	Receive Data +
3	TD-	Transmit Data -
4	RD-	Receive Data -
Thread	FE	Functional earth (housing)

BUS OUT (4-pin socket, D-coded)		
Pin	**Name**	**Remark**
1	TD+	Transmit Data +
2	RD+	Receive Data +
3	TD-	Transmit Data -
4	RD-	Receive Data -
Thread	FE	Functional earth (housing)

Figure 9.3: PROFINET - Electrical connection

Notice!

*For contacting **BUS IN** and **BUS OUT**, we recommend our ready-made PROFINET cable (see chapter 11.4.5 "Accessory ready-made cables for PROFINET").*

To set up a PROFINET network with other participants with linear topology, the AMS 348*i* makes available another PROFINET-RT interface. The use of this interface drastically reduces the cabling requirements, as only the first AMS 348*i* requires a direct connection to the switch, via which it can communicate with the host. All other AMS 348*i* can be connected in series to the first AMS 348*i*, see figure 9.2.

For the connection of two AMS 348i, the "KSS ET-M12-4A-M12-4A-P7-…" ready-made cables are preferred, see table 11.4.5 "Accessory ready-made cables for PROFINET" on page 105.

If you use user-configurable cables, note the following:

Notice!

The entire connection cable must be shielded. The shielding connection must be at the same potential on both ends of the data line. This prevents potential compensating currents over the shield and possible interference coupling by compensating currents. The signal lines must be stranded in pairs.
Use CAT 5 cable for the connection.

Notice!

For the AMS 348i as standalone device or as the last participant in a linear topology, termination on the BUS OUT socket is not mandatory!

9.8 PROFINET – Commissioning and configuration

9.8.1 PROFINET implementation of the AMS 348i

PROFINET communication profile

The **communication profile** defines how participants serially transmit their data via the transmission medium.

The **PROFINET** communication profile is designed for efficient data exchange on the field level. The data exchange with the devices is mainly **cyclical**. For the configuration, operation, monitoring and alarm handling, however, **acyclic** communication services are also used.

Depending on the communication requirements, PROFINET offers suitable protocols and transfer methods:

- **R**eal **T**ime communication (RT) via prioritized Ethernet frames for
  - Cyclical process data (I/O data stored in the I/O area of the control)
  - Alarms
  - Clock synchronization
  - Neighborhood information
  - Address assignment/address resolution via DCP
- TCP/UDP/IP communication via standard Ethernet TCP/UDP/IP frames for
  - Establishing communication and
  - Acyclic data exchange, and also for the transfer of various information types such as:
    - Parameters for the configuration of the modules during the establishment of the communication
    - I&M data (Identification & Maintenance functions)
    - Reading diagnostic information
    - Reading I/O data
    - Writing device data

Conformance classes

PROFINET devices are categorized into conformance classes to simplify the evaluation and selection of the devices for the users. The AMS 348*i* can use an existing Ethernet network infrastructure and corresponds to Conformance Class B (CC-B). Thus, it supports the following features:

- Cyclical RT communication
- Acyclic TCP/IP communication
- Alarms/diagnostics
- Automatic address assignment
- I&M 0 … 4 functionality
- Neighborhood detection basic functionality
- FAST Ethernet 100 Base-TX
- Convenient device exchange without engineering tools
- SNMP support

9.8.2 Measures to be performed prior to the initial commissioning

↳ *Before commissioning, familiarize yourself with the operation and configuration of the AMS 348i.*

↳ *Before connecting the supply voltage, recheck all connections and ensure that they have been properly made.*

Figure 9.4: Connections of the AMS 348*i*

↳ *Check the applied voltage. It must be in the range between +18V … 30VDC.*

Connecting functional earth FE

↳ *Ensure that the functional earth (FE) is connected correctly.*

Unimpaired operation is only guaranteed when the functional earth is connected properly. All electrical disturbances (EMC couplings) are discharged via the functional earth connection.

9.8.3 Starting the device

↳ *Connect the supply voltage; the AMS 348i boots and the Status and measurement data main menu appears in the display:*

Input/Output behavior

Notice!

The default value of the input data bits after switching on the device corresponds to the specified initial value (generally ZERO).

Notice!

For output data with status IOPS = Bad, the downstream functions are switched to a safe state. For example, an activated device or an output is deactivated. This is the case, for example, if the control is switched to the STOP mode.

In the event of a connection interruption, the device behaves in the same way.

The outputs are deactivated during device start-up.

This section describes how the AMS 348*i* is configured in a Siemens Simatic S7 for PROFINET.

9.8.4 Configuration steps for a Siemens Simatic S7 control

The following steps are necessary for commissioning with a Siemens S7 control:

1. Preparing the control system (S7 PLC)
2. Installing the GSD file
3. Hardware configuration of the S7 PLC
4. Transfer of the PROFINET configuration to the IO Controller (S7 PLC)
5. Device naming
   - Configuration of the device name
   - Device naming
   - Assigning the device names to the configured IO devices(see figure 9.6)
   - Assignment of MAC address - IP address -individual device name ((see figure 9.11))
6. Check device name

9.8.4.1 Step 1 – Preparing the control system (S7 PLC)

The first step involves the assignment of an IP address to the IO Controller (PLC - S7) and the preparation of the control for consistent data transmission.

Notice!

If an S7 control is used, you need to ensure that Simatic-Manager Version 5.4 + service pack 5 (V5.4+SP5) or higher is used.

9.8.4.2 Step 2 – Installation of the GSD file

For the subsequent configuration of the IO devices, e.g., AMS 348*i*, the corresponding GSD file must be loaded first.

General information on the GSD file

The term GSD stands for the textual description of a PROFINET device model.

For the description of the more complex PROFINET device model, the XML-based GSDML (Generic Station Description Markup Language) was introduced.

In the following, the terms "GSD" or "GSD file" always refer to the GSDML-based format.

The GSDML file can support an arbitrary number of languages in one file. Every GSDML file contains a version of the AMS 348*i* device model. This is also reflected in the file name.

File name structure

The file name of the GSD file is constructed according to the following rule:

GSDML-[GSDML schema version]-Leuze-AMS348i-[date].xml

Explanation:

- GSDML schema version:
  Version identifier of the GSDML schema version used, e.g., V2.3.
- Date:
  Release date of the GSD file in the format yyyymmdd.
  This date doubles as the version identifier of the file.

Example:

GSDML-V2.3x-Leuze-AMS348i-20090503.xml

You can find the GSD file at **www.leuze.com**.

All data in modules required for operating the **AMS 348*i*** is described in this file. These are input and output data and device parameters for the functioning of the **AMS 348*i*** and the definition of the control and status bits.

If parameters are changed, e.g., in the project tool, these changes are stored on the PLC side in the project, not in the GSD file. The GSD file is a certified and integral part of the device and must not be changed manually. The file is not changed by the system either.

The functionality of the **AMS 348*i*** is defined via GSD parameter sets. The parameters and their functions are structured in the GSD file using module. A user-specific configuration tool is used during PLC program creation to integrate the required modules and configure them appropriately for their respective use. During operation of the **AMS 348*i*** on the PROFINET, all parameters are set to default values. If these parameters are not changed by the user, the device functions with the default settings delivered by Leuze electronic.

For the default settings of the **AMS 348*i***, please refer to the following module descriptions.

ПРОМЭЛЕКТРОНИКА / sales@prom-elec.com

9.8.4.3 Step 3 – Hardware configuration of the S7 PLC: Configuration

The AMS 348*i* is activated by "Drag and Drop" and receives the IP address and a unique device name.

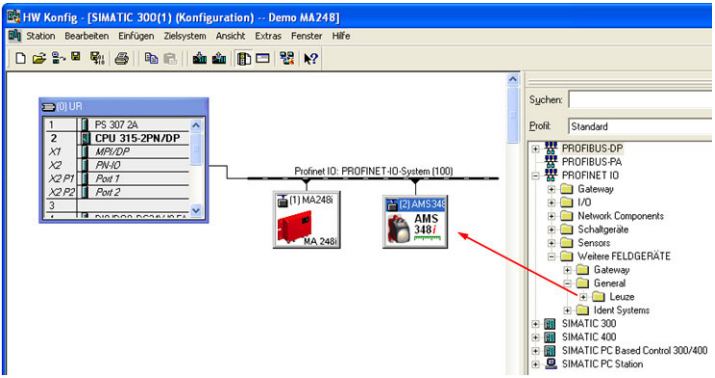

Figure 9.5: Insert AMS 348*i* into the project

Double-clicking the participant opens the properties window. Here you can assign a unique device name that exists only once in the network. If desired, an IP address can be assigned manually (not mandatory). As the assignment of the device name takes place in offline mode, unique assignment must take place between the MAC ID of the installed device and the device name assigned in offline mode during the further course of configuration, see also step 5.

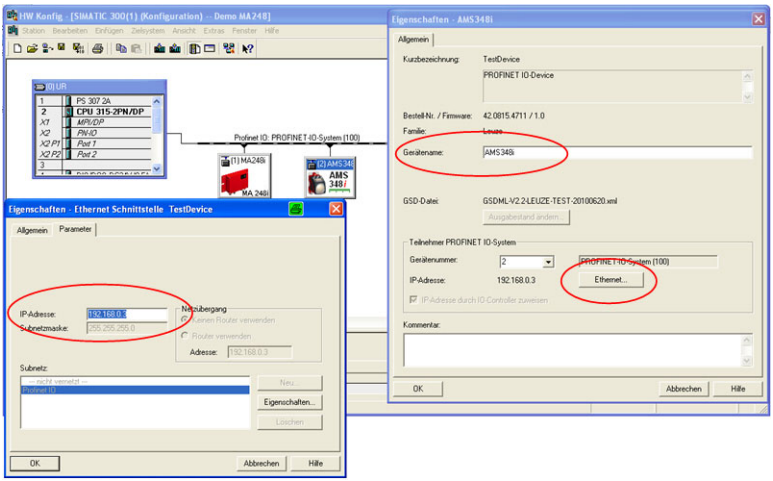

Figure 9.6: Assign unique device name in the properties window

9.8.4.4 Step 4 – Transfer of the configuration to the IO Controller (S7 PLC)

After the correct transfer to the IO Controller (S7 PLC), the PLC automatically carries out the following activities:

- Check device names
- Assignment of the IP addresses that were configured in the HW Config to the IO devices
- Establishment of a connection between the IO Controller and configured IO devices
- Cyclical data exchange

Notice!

Participants without assigned device names cannot yet be addressed at this point in time!

9.8.4.5 Step 5 – Configuration of the device name - naming the device

Each AMS 348*i* has an individual and unique MAC ID. The MAC ID can be found on the name plate of the device.

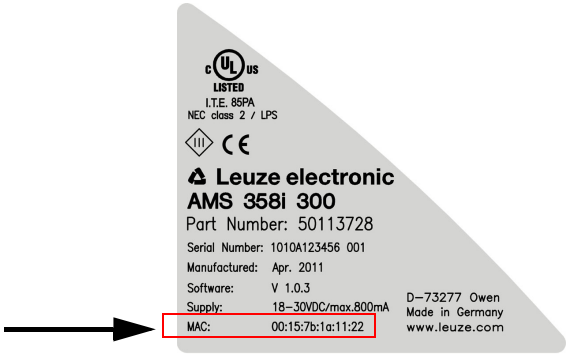

Figure 9.7: MAC ID on the name plate

Notice!

This figure is for illustration only and does not correspond in all details to the AMS 348i. The MAC ID in particular must be read separately from each individual device. The MAC ID is also shown in the display of the AMS 348i.

Address Link Label:

The “Address Link Label” is an additional stick-on label that is affixed to the device.

	AMS 348i MAC 00:15:7B:20:00:15
	IP
	Name

Bild 9.8: Example of an “Address Link Label”; the device type varies depending on series

- The “Address Link Label” contains the MAC address (Media Access Control address) of the device and offers the possibility to enter the IP address and the device name by hand. The area of the “Address Link Label” on which the MAC address is printed can be separated from the remainder of the stick-on label if necessary by means of the perforation.
- To use, the “Address Link Label” is peeled from the device and can be affixed in the installation and layout diagrams to designate the device.
- Once affixed in the documents, the “Address Link Label” establishes a unique reference between mounting location, MAC address or device, as well as the corresponding control program. The time-consuming searching, reading, and manually writing down of the MAC addresses of all devices installed in the system are eliminated.

Notice!

Each device with Ethernet interface is uniquely identified via the MAC address assigned during production. The MAC address is also listed on the name plate of the device. If multiple devices are commissioned in a system, the MAC address of each installed device must be correctly assigned, e.g., during programming of the control.

↳ *Remove the “Address Link Label” from the device.*

↳ *Amend the IP address and the device name on the “Address Link Label” as necessary.*

↳ *Affix the “Address Link Label” in the documents, e.g., in the installation diagram, according to the position of the device.*

```
Network information
IP Address:   ---.---.---.---
Netzmask:     ---.---.---.---
Gateway:      ---.---.---.---
MAC ID:       --.--.--.--.--.--
DevName:      ------------------------
```

After successful naming, the device name can be read here under DEVName.

Notice!

All AMS 348i participants in a PROFINET network must be located in the same subnet!

Device naming

The so-called "device naming" under PROFINET is understood as the unique assignment of the device name from the PLC program generation (see step 3) to the PROFINET participant mounted in the system. The device name is linked to the MAC ID of the mounted PROFINET participant.

It is mandatory that the device name corresponds to the device name assigned in hardware configuration (step 3).

↳ *Under "Target systems", select item "Edit Ethernet participant".*

↳ *Click "Search" to scan the connected PROFINET network for MAC addresses.*

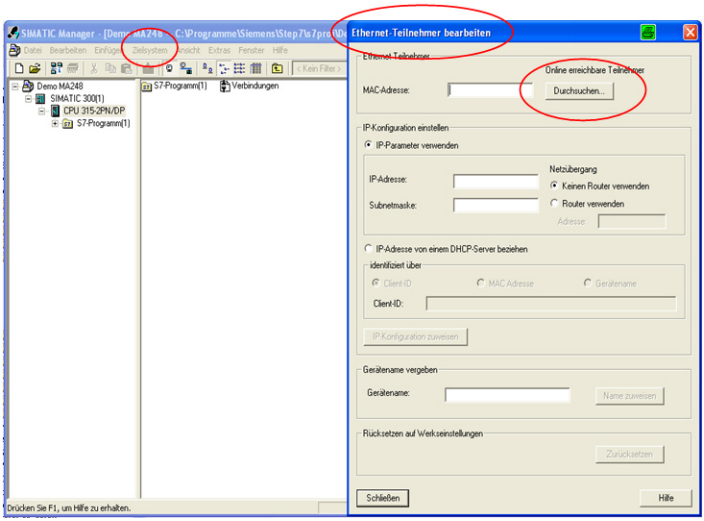

Figure 9.9: Scan the PROFINET network for connected devices (MAC addresses)

Mark the desired MAC address to which you wish to assign a device name.

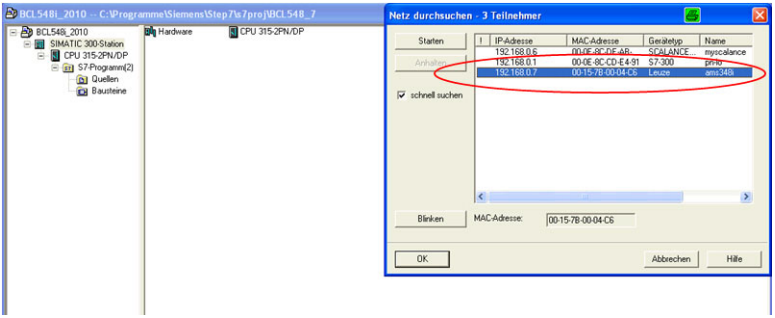

Figure 9.10: Select desired device (MAC address)

Notice!

The Simatic Manager offers the possibility of having the found and marked participant (marking of the MAC ID in the Simatic Manager) flash/wave. The mounting location of the participant in the system can then be uniquely assigned to the MAC ID. The marked MAC ID "waves".
During flashing/waving, the Power LED and BUS LED of the AMS 348i flash orange.

The found MAC ID is "linked" to the device name assigned in the hardware configurator. Please be sure to pay attention that the names are the same and that the installed device is correctly assigned to the hardware configuration. This is particularly important if identical devices are installed several times in the same system.

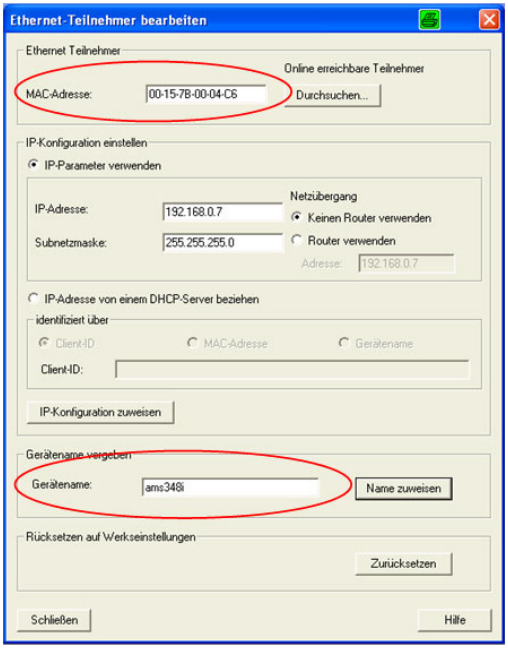

Figure 9.11: Linking of the device name to the MAC ID of the participant

The same configuration mask can be used, if necessary, to manually assign an IP address. Alternatively, the IP address can be assigned via a DHCP server.

9.8.4.6 Neighborhood detection

Neighborhood detection in Step 7 takes place using a port assignment:

- BUS IN corresponds to port 1 (X1 P1).
- BUS OUT corresponds to port 2 (X1 P2).

9.9 PROFINET GSD file

9.9.1 General information on the GSD file

The functionality of the AMS 348*i* is defined via an XML-based GSD file. The GSD file is the same for all AMS 348*i* and forms a mandatory part of the device. The GSD file has a modular architecture and contains all the functions of the AMS 348*i* in modules.

The AMS 348*i* offers 17 different modules. Each of these modules can only be activated once per AMS.

The AMS 348*i* checks its max. permissible number of modules. The control also reports an error if the input and output data across all modules exceed a total length of 1024 bytes.

The specific limits of the individual modules of the AMS 348*i* are stored in the module description and in the GSD file.

Notice!

The current GSD file for the AMS 348i can be found on our homepage ***www.leuze.com.***

The participant (here AMS 348*i*) is configured via the GSD file with a user-specific configuration tool such as the Siemens Simatic Manager.

The exchange of data and the configuration of parameters is organized by means of the GSD file.

All the parameters of the AMS 348*i* are preset default values. These can be altered, depending on the application. The user activates only the modules from the GSD file whose parameters should be changed or whose input/output data are to be read.

For this purpose, the corresponding module from the GSD file is activated and configured or prepared for control and reading of inputs and outputs.

All parameters and accesses to the AMS 348*i* are thus stored in the control. If necessary, the configuration is written to the AMS according to predefined control criteria.

Notice!

Parameters can be changed via the display on the AMS 348i for test purposes. As soon as parameter enabling is activated on the display, the AMS 348i is deactivated on the PROFINET. All the parameters set via the GSD file initially remain active in the AMS 348i. Parameter changes can now be made via the display for test purposes. If parameter enabling is deactivated via the display, only the parameters entered in the PROFINET modules and the PROFINET default settings are in effect.

Parameter changes made via the display are no longer in effect on the PROFINET!

Attention!

The laser measurement system does not permanently store parameters changed via the PROFINET. Following power OFF/ON the currently configured parameters are downloaded by the PROFINET master. If the PROFINET master is no longer available after power OFF/ON, the default parameters are valid.

Notice!

All input and output modules described in this documentation are described ***from the controller's perspective***:

Described inputs (I) are inputs of the control.
Described outputs (O) are outputs of the control.
Described parameters (P) are parameters of the GSD file in the control.

9.9.2 Overview of the GSD modules

Module	Module name	Module contents (P) = Parameter, (O) = Output, (I) = Input
M1 page 71	**Position value**	(I) Position value
		(P) Sign
		(P) Unit
		(P) Resolution
		(P) Count direction
		(P) Offset
M2 page 73	**Static preset**	(P) Preset value
		(O) Preset teach
		(O) Preset reset
M3 page 74	**Dynamic preset**	(O) Preset value
		(O) Preset teach
		(O) Preset reset
M4 page 75	**I/O 1**	(P) Output or input defined
		(P) Level/edge input/output
		(P) Function for output wiring
		(P) Function for input wiring
		(I) Signal level input/output
		(O) Output activated
M5 page 77	**I/O 2**	(P) Output or input defined
		(P) Level/edge input/output
		(P) Function for output wiring
		(P) Function for input wiring
		(I) Signal level input/output
		(O) Output activated
M6 page 79	**Status and control**	(I) Diagnosis and status of AMS 348*i*
		(O) Laser control ON/OFF
M7 page 81	**Position limit value 1**	(P) Upper and lower position limit value
M8 page 82	**Position limit value 2**	(P) Upper and lower position limit value
M9 page 83	**Error handling procedures**	(P) Position value in case of error
		(P) Position error message delay ON/OFF
		(P) Position error message delay
		(P) Velocity value in case of error
		(P) Velocity error message delay ON/OFF
		(P) Velocity error message delay
M10 page 85	**Velocity**	(I) Velocity value
		(P) Velocity value resolution
		(P) Velocity response time

M11 page 86	**Velocity limit value 1**	(P) Monitoring for over/under values
		(P) Monitoring direction dependent yes/no
		(P) Velocity limit value 1
		(P) Hysteresis of velocity limit value
		(P) Start of velocity monitoring range
		(P) End of velocity monitoring range
M12 page 88	**Velocity limit value 2**	(P) Monitoring for over/under values
		(P) Monitoring direction dependent yes/no
		(P) Velocity limit value 2
		(P) Hysteresis of velocity limit value
		(P) Start of velocity monitoring range
		(P) End of velocity monitoring range
M13 page 89	**Velocity limit value 3**	(P) Monitoring for over/under values
		(P) Monitoring direction dependent yes/no
		(P) Velocity limit value 3
		(P) Hysteresis of velocity limit value
		(P) Start of velocity monitoring range
		(P) End of velocity monitoring range
M14 page 90	**Velocity limit value 4**	(P) Monitoring for over/under values
		(P) Monitoring direction dependent yes/no
		(P) Velocity limit value 4
		(P) Hysteresis of velocity limit value
		(P) Start of velocity monitoring range
		(P) End of velocity monitoring range
M15 page 91	**Velocity Limit value Dynamic**	(O) Release/lock limit value control
		(P) Monitoring for over/under values
		(P) Monitoring direction dependent yes/no
		(O) Dynamic velocity limit value
		(O) Hysteresis of velocity limit value
		(O) Start of velocity monitoring range
		(O) End of velocity monitoring range
M16 page 92	**Velocity status**	(I) Status of velocity monitoring
M18 page 94	**Other**	(P) Display language selection
		(P) Display illumination
		(P) Display contrast
		(P) Activate/inhibit password
		(P) Password
		(P) Heating control
M19	**–**	–
M20 page 95	**Free resolution**	(P) Position resolution
		(P) Velocity resolution

Table 9.3: Overview of the GSD modules

9.9.3 Detail description of the modules

Notice!

In the following detailed descriptions of the modules you will find in the last column of the tables ***cross references (CR) to parameters and input/output data of other modules*** *which are directly related to the described parameter.* ***These cross references must absolutely be observed during configuration.***

The individual ***modules*** *are numbered from* ***1 … 20****.*
The ***parameters and input/output data*** *within a module are from* a *…* z*.*

Example:

The a **preset** parameter in module 2 becomes active only when the preset teach occurs via module 2 b, 4 d or 5 d.

9.9.3.1 Module 1: Position value

PROFINET module identifier

Module-ID	1001
Submodule-ID	1

Description

Outputs the current position value.

The parameters for sign, unit, resolution, count direction and offset remain adjustable.

Parameters

Parameter	Description	Rel. addr.	Data type	Value range	Default	Unit		CR to module
						metr.	Inch	
a **Sign**	Output mode of the sign. Sign affects position and velocity output.	0.0	Bit	**0: two's complement** 1: sign + quantity	**0**	–		–
b **Measure-ment unit**	Selection of the measurement unit [1]. The parameter applies to all values with measurement units. The parameter applies to all interfaces.	0.1	Bit	**0: metric** 1: inch (in)	**0**	–		–
c **Resolution**	Resolution of the position value. Affects only the PROFINET output. The resolution does not apply to: - Static preset - Dynamic preset - Offset	0.2 … 0.4	Bit	001 = 1: 0.001 010 = 2: 0.01 011 = 3: 0.1 **100 = 4: 1** 101 = 5: 10 110 = 6: free resolution	**4**	mm	in/100	20a

d **Count direction**	Counting direction positive: 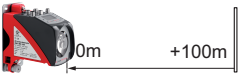 Counting direction negative: 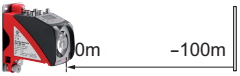 The parameter applies to all interfaces. The count direction changes the sign during velocity measurement.	0.5	Bit	**0: positive** 1: negative	**0**	–		–
e **Offset**	Output value = measurement value+offset. The parameter applies to all interfaces. **Attention**: If the preset is activated, it has priority over the offset. Preset and offset are not offset against each other. The resolution of the offset value is independent of the resolution selected in module 1. The entered offset applies immediately without any further release.	1 - 4	sign 32 bit	-999999 … +999999	**0**	mm	in/100	–
Parameter length: 6 bytes								

1) see following notice!

Notice!

*If the **unit of measurement is changed from metric to inch** (or vice versa), **previously entered numerical values** (e.g. for offset, preset, limit values etc.) **are not automatically converted**. This must be performed manually!*

Example:
Preset = 10000mm -> Change from metric to inch -> Preset = 10000 inch/100

Input data

Input data	Description	Rel. addr.	Data type	Value	Default	Unit		CR to module
						metr.	Inch	
f **Position value**	Output of the current position.	0	sign 32 bit	-999999 … +999999	–	scaled		9a
Input data length: 4 bytes consistently								

Output data

None

9.9.3.2 Module 2: Static preset

PROFINET module identifier

Module-ID 1002

Submodule-ID 1

Description

With this module, a preset value can be specified. The specified preset value becomes active in the position in which preset teaching is performed.

Notice!

In the event of a device change the preset value is retained in the PROFINET manager. The activation of the preset value (preset teach) at the intended position must, however, be performed again.

Parameters

Parameter	Description	Rel. addr.	Data type	Value	Default	Unit		CR to module
						metr.	Inch	
a **Preset**	Preset value. The value is accepted during a corresponding teach event (see output data). The resolution of the preset value is independent of the resolution selected in module 1.	0	sign 32 bit	-999999 … +999999	**0**	mm	in/100	2b 4d 5d
Parameter length: 4 bytes								

Input data

None

Output data

Output data	Description	Rel. addr.	Data type	Value	Default	Unit		CR to module
						metr.	Inch	
b **Preset teach**	Read in the preset value.	0.0	Bit	0→1 Preset teach	–	–		4d 5d
c **Preset reset**	Preset value is deactivated.	0.1	Bit	0→1 Preset reset	–	–		4d 5d
Output data length: 1 byte								

9.9.3.3 Module 3: Dynamic preset

PROFINET module identifier

Module-ID 1003

Submodule-ID 1

Description

With this module, a preset value can be specified. The specified preset value becomes active in the position in which preset teaching is performed. The preset value can be adjusted within the control to meet plant requirements without intervening in the static parameter structure.

Parameters

None

Input data

None

Output data

Output data	Description	Rel. addr.	Data type	Value	Default	Unit		CR to module
						metr.	Inch	
a **Preset teach**	Read in the preset value.	0.0	Bit	0→1 Preset teach	–	–		4d 5d
b **Preset reset**	Preset value is deactivated. Output value=measurement value+offset.	0.1	Bit	0→1 Preset reset	–	–		4d 5d
c **Preset**	The value is accepted during a corresponding teach event, The resolution of the preset value is independent of the resolution selected in module 1.	1	sign 32 bit	-999999 … +999999	–	mm	in/100	3a 4d 5d
Output data length: 5 bytes								

9.9.3.4 Module 4: I/O 1 Input/Output

PROFINET module identifier

Module-ID 1004

Submodule-ID 1

Description

The module defines the mode of operation of the digital input/output **I/O 1**.

Parameters

Parameter	Description	Rel. addr.	Data type	Value	Default	Unit		CR to module
						metr.	Inch	
a **Function**	The parameter defines whether **I/O 1** functions as an input or as an output.	0.0	Bit	0: Input **1: Output**	**1**	–		4cd
b **Activation**	The parameter defines the level of the output when the "output" event is received. If **I/O 1** is configured as an input, the response is edge-controlled.	0.1	Bit	**0: Low** **1-0 transition** 1: High 0-1 transition	**0**	–		–
c **Output**	The parameter defines which event triggers activation of the output. The individual functions are **OR**-linked to one another.					–		4a
	Position limit value 1 If the position value lies outside of configured limit range 1, the output is set.	1.0	Bit	**0 = OFF** 1 = ON	**0**	–		
	Position limit value 2 If the position value lies outside of configured limit range 2, the output is set.	1.1	Bit	**0 = OFF** 1 = ON	**0**	–		
	Velocity limit value If the velocity value lies outside of the configured values, the output is set. Monitoring from modules 11 to 15 is OR-linked.	1.2	Bit	**0 = OFF** 1 = ON	**0**	–		
	Intensity (ATT) If the intensity of the received signal is less than the warning threshold, the output is set.	1.3	Bit	**0 = OFF** 1 = ON	**0**	–		
	Temperature (TMP) If the internal device temperature exceeds the set limit value, the output is set.	1.4	Bit	**0 = OFF** 1 = ON	**0**	–		
	Laser (LSR) Laser prefailure message.	1.5	Bit	**0 = OFF** 1 = ON	**0**	–		
	Plausibility (PLB) If implausible measurement values are diagnosed, the output is set.	1.6	Bit	0 = OFF **1 = ON**	**1**	–		

c **Output**	**Hardware (ERR)** If a hardware error is diagnosed, the output is set.	1.7	Bit	0 = OFF **1 = ON**	**1**	–	4a
	Pseudodynamic output If bit 0.0 is set in the output data, the output is set.	2.0	Bit	**0 = OFF** 1 = ON	**0**	–	
d **Input**	**Preset** The HW input is used as preset teach input (valid for static or dynamic preset). **Laser** The HW input is used as laser OFF.	3.0 … 3.2	Unsign 8 Bit	**000 = HW input no function** 001 = HW input as preset teach function 010 = HW input as laser OFF function	**000**	–	4a
Parameter length: 4 bytes							

Notice!

Behavior of the AMS 348i on Laser ON/OFF:

If the laser light spot is positioned on the reflector when the laser diode is switched on, the AMS 348i returns valid measurement values after approx. 330ms.

*If the laser light spot is **not** positioned on the reflector when the laser diode is switched on, the AMS 348i cannot calculate any distance values. If the laser beam hits the reflector at a later point in time while switched-on, the AMS 348i returns valid measurement values after the following time span:*

t = (measurement distance / 20m) sec.

Example: *Corridor change of a high-bay storage device during which the laser diode is not switched off while traveling around curves.*
Measurement distance 100m –> t = 5sec., measurement distance 200m –> t = 10sec.

Input data

Input data	Description	Rel. addr.	Data type	Value	Default	Unit		CR to module
						metr.	Inch	
e **State**	Signal state of the input or output.	0.0	Bit	0: Input/Output at signal level **not active** 1: Input/Output at signal level **active**	–	–		–
Input data length: 1 byte								

Output data

Output data	Description	Rel. addr.	Data type	Value	Default	Unit		CR to module
						metr.	Inch	
f **State**	The output can be activated/deactivated with this bit. The corresponding release is performed in module 4, output parameter bit 2.0.	0.0	Bit	0: Output at signal level **not active** 1: Output at signal level **active**	–	–		4c
Output data length: 1 byte								

9.9.3.5 Module 5: I/O 2 Input/Output

PROFINET module identifier

Module-ID 1005

Submodule-ID 1

Description

The module defines the mode of operation of the digital input/output **I/O 2**.

Parameters

Parameter	Description	Rel. addr.	Data type	Value	Default	Unit		CR to module
						metr.	Inch	
a **Function**	The parameter defines whether **I/O 2** functions as an input or as an output.	0.0	Bit	0: Input **1: Output**	**1**	–		5cd
b **Activation**	The parameter defines the level of the output when the "output" event is received. If **I/O 2** is configured as an input, the response is edge-controlled.	0.1	Bit	**0: Low** **1-0 transition** 1: High 0-1 transition	**0**	–		–
c **Output**	The parameter defines which event triggers activation of the output. The individual functions are **OR**-linked to one another.					–		5a
	Position limit value 1 If the position value lies outside of configured limit range 1, the output is set.	1.0	Bit	**0 = OFF** 1 = ON	**0**	–		
	Position limit value 2 If the position value lies outside of configured limit range 2, the output is set.	1.1	Bit	**0 = OFF** 1 = ON	**0**	–		
	Velocity limit value If the velocity value lies outside of the configured values, the output is set. Monitoring from modules 11 to 15 is OR-linked.	1.2	Bit	**0 = OFF** 1 = ON	**0**	–		
	Intensity (ATT) If the intensity of the received signal is less than the warning threshold, the output is set.	1.3	Bit	0 = OFF **1 = ON**	**1**	–		
	Temperature (TMP) If the internal device temperature exceeds the set limit value, the output is set.	1.4	Bit	0 = OFF **1 = ON**	**1**	–		
	Laser (LSR) Laser prefailure message.	1.5	Bit	0 = OFF **1 = ON**	**1**	–		
	Plausibility (PLB) If implausible measurement values are diagnosed, the output is set.	1.6	Bit	**0 = OFF** 1 = ON	**0**	–		

c **Output**	**Hardware (ERR)** If a hardware error is diagnosed, the output is set.	1.7	Bit	**0 = OFF** 1 = ON	**0**	–	5a
	Pseudodynamic output If bit 0.0 is set in the output data, the output is set.	2.1	Bit	**0 = OFF** 1 = ON	**0**	–	
d **Input**	**Preset** The HW input is used as preset teach input (valid for static or dynamic preset). **Laser** The HW input is used as laser OFF.	3.0 … 3.2	Unsign 8 Bit	**000 = HW input no function** 001 = HW input as preset teach function 010 = HW input as laser OFF function	**000**	–	5a
Parameter length: 4 bytes							

Notice!

Behavior of the AMS 348i on Laser ON/OFF:

If the laser light spot is positioned on the reflector when the laser diode is switched on, the AMS 348i returns valid measurement values after approx. 330ms.

*If the laser light spot is **not** positioned on the reflector when the laser diode is switched on, the AMS 348i cannot calculate any distance values. If the laser beam hits the reflector at a later point in time while switched-on, the AMS 348i returns valid measurement values after the following time span:*

t = (measurement distance / 20m) sec.

Example: Corridor change of a high-bay storage device during which the laser diode is not switched off while traveling around curves.
Measurement distance 100m –> t = 5sec., measurement distance 200m –> t = 10sec.

Input data

Input data	Description	Rel. addr.	Data type	Value	Default	Unit		CR to module
						metr.	Inch	
e **State**	Signal state of the input or output.	0.0	Bit	0: Input/Output at signal level **not active** 1: Input/Output at signal level **active**	–	–		–
Input data length: 1 byte								

Output data

Output data	Description	Rel. addr.	Data type	Value	Default	Unit		CR to module
						metr.	Inch	
f **State**	The output can be activated/deactivated with this bit. The corresponding release is performed in module 5, output parameter bit 2.1.	0.0	Bit	0: Output at signal level **not active** 1: Output at signal level **active**	–	–		5c
Output data length: 1 byte								

9.9.3.6 Module 6: Status and control

PROFINET module identifier

Module-ID 1006

Submodule-ID 1

Description

The module signals various status information of the AMS 348*i*. The laser can be controlled via the master's output data.

Parameters

None

Input data

Input data	Description	Rel. addr.	Data type	Value	Default	Unit		CR to module
						metr.	Inch	
a **Laser status**	Signals the laser status.	1.0	Bit	0: Laser ON 1: Laser OFF	–	–		–
b **Preset status**	Status of the preset value.	1.1	Bit	0: Preset not active 1: Preset active	–	–		–
c **Preset teach**	This bit toggles on each teach event of a preset value.	1.2	Bit	0 or 1	–	–		–
d **Reserved**		1.3	Bit		–	–		–
e **Intensity (ATT)**	If the intensity of the received signal is less than the warning threshold, the status bit is set.	1.4	Bit	0: OK 1: Warning	–	–		–
f **Temperature (TMP)**	If the internal device temperature exceeds or drops below the set limit value, the status bit is set.	1.5	Bit	0: OK 1: Temperature above/below limit	–	–		–
g **Laser (LSR)**	Laser prefailure message.	1.6	Bit	0: OK 1: Laser warning	–	–		–
h **Plausibility (PLB)**	If implausible measurement values are diagnosed, the status bit is set.	1.7	Bit	0: OK 1: Implausible measurement value	–	–		–
i **Hardware (ERR)**	If a hardware error is diagnosed, the status bit is set.	0.0	Bit	0: OK 1: Hardware error	–	–		–
j **Lower position limit value 1**	Signals that the value is less than lower limit value 1.	0.4	Bit	0: OK 1: Value less than limit	–	–		–
k **Upper position limit value 1**	Signals that the value is greater than upper limit value 1.	0.5	Bit	0: OK 1: Value greater than limit	–	–		–

l **Lower position limit value 2**	Signals that the value is less than lower limit value 2.	0.6	Bit	0: OK 1: Value less than limit	–	–	–
m **Upper position limit value 2**	Signals that the value is greater than upper limit value 2.	0.7	Bit	0: OK 1: Value greater than limit	–	–	–
Input data length: 2 bytes							

Output data

Output data	Description	Rel. addr.	Data type	Value	Default	Unit		CR to module
						metr.	Inch	
n **Laser**	Laser control.	0.0	Bit	0: Laser ON 1: Laser OFF	–	–		–
Output data length: 2 bytes								

9.9.3.7 Module 7: Position limit value range 1

PROFINET module identifier

Module-ID 1007

Submodule-ID 1

Description

The position limit value range 1 parameter defines a distance range with lower and upper limits. If the measured value lies outside of the configured range, the corresponding bit is set in module 6 or, if configured, an output is set.

Parameters

Parameter	Description	Rel. addr.	Data type	Value	Default	Unit		CR to module
						metr.	Inch	
a **Lower pos. limit 1**	Specifies the lower position limit.	0…3	sign 32 bit	-999999 … +999999	**0**	mm	in/100	–
b **Upper pos. limit 1**	Specifies the upper position limit.	4…7	sign 32 bit	-999999 … +999999	**0**	mm	in/100	–
Parameter length: 8 bytes								

Input data

None

Output data

None

9.9.3.8 Module 8: Position limit value range 2

PROFINET module identifier

Module-ID 1008

Submodule-ID 1

Description

The position limit value range 2 parameter defines a distance range with lower and upper limits. If the measured value lies outside of the configured range, the corresponding bit is set in module 6 or, if configured, an output is set.

Parameters

Parameter	Description	Rel. addr.	Data type	Value	Default	Unit		CR to module
						metr.	Inch	
a **Lower pos. limit 2**	Specifies the lower position limit.	0…3	sign 32 bit	-999999 … +999999	**0**	mm	in/100	–
b **Upper pos. limit 2**	Specifies the upper position limit.	4…7	sign 32 bit	-999999 … +999999	**0**	mm	in/100	–
Parameter length: 8 bytes								

Input data

None

Output data

None

9.9.3.9 Module 9: Error handling procedures

PROFINET module identifier

Module-ID 1009

Submodule-ID 1

Description

The module makes parameters available to handle any errors should they occur.

In the event of a temporary error in the value/velocity calculation (e.g. plausibility error caused by light beam interruption) the laser measurement system transmits the last valid measurement value for a length of time xx which is to be configured.

If the configured time is exceeded, the error display or the faulty measurement value output is activated.

Parameters

Parameter	Description	Rel. addr.	Data type	Value	Default	Unit		CR to module
						metr.	Inch	
a **Position value in the case of error**	Specifies which position value is to be output in the event of an error after the position suppression time has elapsed.	0.0	Bit	0: Last valid value **1: Zero**	**1**	mm	in/100	–
	No function.	0.1	Bit	Always 0	0	–		–
b **Suppress position status**	Specifies whether the PLB status bit is set immediately in the event of an error or if it is suppressed for the configured position suppression time.	0.2	Bit	0: OFF **1: ON**	**1**	–		–
c **Error delay (position)**	Specifies in the event of an error whether the position value immediately outputs the value of the "position value in the case of error" parameter or outputs the last valid position value for the duration of the configured "error delay time".	0.3	Bit	0: OFF **1: ON**	**1**	–		–
d **Error delay time (position)**	Errors which occur are suppressed for the configured time. If no valid position value can be ascertained during the configured time, the last valid position value is output. If the error persists after the time elapses, the value stored in the "position value in the case of error" parameter is output.	1…2	unsign 16 bit	100 … 1000	**100**	ms		–
e **Velocity in the case of error**	Specifies which velocity is to be output in the event of an error after the velocity suppression time has elapsed.	3.0	Bit	0: Last valid value **1: Zero**	**1**	–		–
	No function.	3.1	Bit	Always 0	0	–		–
f **Suppress velocity status**	Specifies whether the PLB status bit is set immediately in the event of an error or if it is suppressed for the configured velocity suppression time.	3.2	Bit	0: OFF **1: ON**	**1**	–		–

g **Error delay (velocity)**	Specifies in the event of an error whether the velocity immediately outputs the value of the "velocity in the case of error" parameter or outputs the last valid velocity for the duration of the configured "error delay time".	3.3	Bit	0: OFF **1: ON**	**1**	–	–
h **Error delay time (velocity)**	Errors which occur are suppressed for the configured time. If no velocity position value can be ascertained during the configured time, the last valid velocity value is output. If the error persists after the time elapses, the value stored in the "velocity in the case of error" parameter is output.	4…5	unsign 16 bit	200 … 1000	**200**	ms	–
Parameter length: 6 bytes							

Input data

None

Output data

None

9.9.3.10 Module 10: Velocity

PROFINET module identifier

Module-ID 1010

Submodule-ID 1

Description

Outputs the current velocity with the configured resolution. The unit (metric or inch) is set in module 1 (position value) and also applies to the velocity. If module 1 is not configured, the AMS 348*i* operates with the default unit (metric).

The sign of the velocity is dependent on the count direction in module 1d.

In the default setting a positive velocity is output when the reflector moves away from the AMS 348*i*. When the reflector moves towards the AMS 348*i*, negative velocities are output. If the "negative" count direction is configured in module 1, the velocity signs are reversed.

Measurement value preparation averages all velocity values calculated during the selected period (averaging) to yield a velocity output value.

Parameters

Parameter	Description	Rel. addr.	Data type	Value	Default	Unit		CR to module
						metr.	Inch	
a **Velocity resolution**	The parameter specifies the resolution for the velocity value.	0.0 … 0.2	Bit	**001=1: 1** 010=2: 10 011=3: 100 100=4: 1000 101 = 5: free resolution	**1**	mm/s	(in/ 100) /s	20b
b **Average**	The parameter specifies the response time (averaging time) of the calculated velocity values.	0.3 … 0.5	Bit	000=0: 2 001=1: 4 010=2: 8 **011=3: 16** 100=4: 32 101=5: 64 110=6: 128	**3**	ms		–
Parameter length: 2 bytes								

Input data

Input data	Description	Rel. addr.	Data type	Value	Default	Unit		CR to module
						metr.	Inch	
c **Velocity**	Current velocity.	0	sign 32 bit	**-999999** … +999999	**0**	scaled		–
Input data length: 4 bytes consistently								

Output data

None

9.9.3.11 Module 11: Static velocity limit value 1

PROFINET module identifier

Module-ID	1011
Submodule-ID	1

Description

The **static velocity limit value 1** function compares the current velocity with a velocity stored in the configuration. This occurs in the configured range, which is defined by **range start** and **range end**.

Notice!

*If **range start** and **range end** are identical, velocity monitoring is active over the entire traversing range.*

If a direction-dependent limit value check is activated via the **direction selection** parameter, the values of **range start** and **range end** also define the direction. The check is always performed from **range start** to **range end**. For example, if the range start is "5500" and the range end is "5000", the direction-dependent check is only performed in the direction from "5500" to "5000". The limit value is not active in the opposite direction.

*If the check is independent of direction, the order of **range start** and **range end** is irrelevant. Depending on the selected **switching mode**, if the value is above or below the defined limits, the limit value status in module 16 is set and, if configured, the output is appropriately set via module 4 or 5.*

Notice!

The explanations given above on the "Range start" and "Range end" parameters apply analogously for modules 12-15.

Parameters

Parameter	Description	Rel. addr.	Data type	Value	Default	Unit		CR to module
						metr.	Inch	
a **Switching mode**	Condition for the "velocity limit value 1" signal, which applies to the output (module 4/5) and the status bit (module 16).	0.0	Bit	**0: Value greater than limit** 1: Value less than limit	**0**	–		–
b **Direction selection**	Selection of direction-dependent or direction-independent limit value checking.	0.1	Bit	**0: Direction independent** 1: Direction dependent	**0**	–		–
c **Velocity limit value 1**	Limit value is compared to the current velocity.	1…2	unsign 16 bit	0 … 20000	**0**	mm/s	(in/100)/s	16d
d **Velocity hysteresis 1**	Relative shift to prevent signal bouncing.	3…4	unsign 16 bit	0 … 20000	**100**	mm/s	(in/100)/s	–

e **Limit value 1 range start**	The velocity limit value is monitored beginning at this position.	5…8	sign 32 bit	-999999 … +999999	**0**	mm	in/ 100	–
f **Limit value 1 range end**	The velocity limit value is monitored up to this position.	9 … 12	sign 32 bit	-999999 … +999999	**0**	mm	in/ 100	–
Parameter length: 13 bytes								

Input data

None

Output data

None

9.9.3.12 Module 12: Static velocity limit value 2

PROFINET module identifier

Module-ID 1012

Submodule-ID 1

Description

The **static velocity limit value 2** function compares the current velocity with a velocity stored in the configuration. This occurs in the configured range, which is defined by **range start** and **range end**.

Notice!

Further explanations on the “Range start” and “Range end” parameters see chapter 9.9.3.11 "Module 11: Static velocity limit value 1".

Parameters

Parameter	Description	Rel. addr.	Data type	Value	Default	Unit		CR to module
						metr.	Inch	
a **Switching mode**	Condition for the "velocity limit value 2" signal, which applies to the output (module 4/5) and the status bit (module 16).	0.0	Bit	**0: Value greater than limit** 1: Value less than limit	**0**	–		–
b **Direction selection**	Selection of direction-dependent or direction-independent limit value checking.	0.1	Bit	**0: Direction independent** 1: Direction dependent	**0**	–		–
c **Velocity limit value 2**	Limit value is compared to the current velocity.	1…2	unsign 16 bit	0 … 20000	**0**	mm/s	(in/ 100) /s	16e
d **Velocity hysteresis 2**	Relative shift to prevent signal bouncing.	3…4	unsign 16 bit	0 … 20000	**100**	mm/s	(in/ 100) /s	–
e **Limit value 2 range start**	The velocity limit value is monitored beginning at this position.	5…8	sign 32 bit	-999999 … +999999	**0**	mm	in/100	–
f **Limit value 2 range end**	The velocity limit value is monitored up to this position.	9 … 12	sign 32 bit	-999999 … +999999	**0**	mm	in/100	–
Parameter length: 13 bytes								

Input data

None

Output data

None

9.9.3.13 Module 13: Static velocity limit value 3

PROFINET module identifier

Module-ID 1013

Submodule-ID 1

Description

The **static velocity limit value 3** function compares the current velocity with a velocity stored in the configuration. This occurs in the configured range, which is defined by **range start** and **range end**.

Notice!

Further explanations on the “Range start” and “Range end” parameters see chapter 9.9.3.11 "Module 11: Static velocity limit value 1".

Parameters

Parameter	Description	Rel. addr.	Data type	Value	Default	Unit		CR to module
						metr.	Inch	
a **Switching mode**	Condition for the "velocity limit value 3" signal, which applies to the output (module 4/5) and the status bit (module 16).	0.0	Bit	**0: Value greater than limit** 1: Value less than limit	**0**	–		–
b **Direction selection**	Selection of direction-dependent or direction-independent limit value checking.	0.1	Bit	**0: Direction independent** 1: Direction dependent	**0**	–		–
c **Velocity limit value 3**	Limit value is compared to the current velocity.	1…2	unsign 16 bit	0 … 20000	**0**	mm/s	(in/ 100) /s	16f
d **Velocity hysteresis 3**	Relative shift to prevent signal bouncing.	3…4	unsign 16 bit	0 … 20000	**100**	mm/s	(in/ 100) /s	–
e **Limit value 3 range start**	The velocity limit value is monitored beginning at this position.	5…8	sign 32 bit	-999999 … +999999	**0**	mm	in/ 100	–
f **Limit value 3 range end**	The velocity limit value is monitored up to this position.	9 … 12	sign 32 bit	-999999 … +999999	**0**	mm	in/ 100	–
Parameter length: 13 bytes								

Input data

None

Output data

None

9.9.3.14 Module 14: Static velocity limit value 4

PROFINET module identifier

Module-ID 1014

Submodule-ID 1

Description

The **static velocity limit value 4** function compares the current velocity with a velocity stored in the configuration. This occurs in the configured range, which is defined by **range start** and **range end**.

Notice!

Further explanations on the “Range start” and “Range end” parameters see chapter 9.9.3.11 "Module 11: Static velocity limit value 1".

Parameters

Parameter	Description	Rel. addr.	Data type	Value	Default	Unit		CR to module
						metr.	Inch	
a **Switching mode**	Condition for the "velocity limit value 4" signal, which applies to the output (module 4/5) and the status bit (module 16).	0.0	Bit	**0: Value greater than limit** 1: Value less than limit	**0**	–		–
b **Direction selection**	Selection of direction-dependent or direction-independent limit value checking.	0.1	Bit	**0: Direction independent** 1: Direction dependent	**0**	–		–
c **Velocity limit value 4**	Limit value is compared to the current velocity.	1…2	unsign 16 bit	0 … 20000	**0**	mm/s	(in/100)/s	16 g
d **Velocity hysteresis 4**	Relative shift to prevent signal bouncing.	3…4	unsign 16 bit	0 … 20000	**100**	mm/s	(in/100)/s	–
e **Limit value 4 range start**	The velocity limit value is monitored beginning at this position.	5…8	sign 32 bit	-999999 … +999999	**0**	mm	in/100	–
f **Limit value 4 range end**	The velocity limit value is monitored up to this position.	9 … 12	sign 32 bit	-999999 … +999999	**0**	mm	in/100	–
Parameter length: 13 bytes								

Input data

None

Output data

None

9.9.3.15 Module 15: Dynamic velocity limit value

PROFINET module identifier

Module-ID 1015

Submodule-ID 1

Description

The **dynamic velocity limit value** compares the current velocity with a stored velocity within the defined range. If the value is above or below the limit value, the dynamic limit value status in module 16 is set and, if configured, the output is appropriately set. **Limit value**, **hysteresis**, **range start** and **range end** are transferred with the output data of this module by the PROFINET master. The transferred values are activated by **Bit 0.0**, i.e. if this bit is set, the AMS 348*i* compares the current velocity with the new limit value conditions.

Notice!

Further explanations on the "Range start" and "Range end" parameters see chapter 9.9.3.11 "Module 11: Static velocity limit value 1".

Parameters

None

Input data

None

Output data

Output data	Description	Rel. addr.	Data type	Value	Default	Unit		CR to module
						metr.	Inch	
a **Limit value control**	Controls internal processing of the transferred dynamic limit value parameters.	0.0	Bit	0: Do not process 1: Process parameter	–	–		–
b **Switching mode**	Condition for the signal change of the output/status bit.	0.1	Bit	0: Value greater than limit 1: Value less than limit	–	–		–
c **Direction selection**	Selection of direction-dependent or direction-independent limit value checking.	0.2	Bit	0: Direction independent 1: Direction dependent	–	–		–
d **Velocity limit value**	Limit value is compared to the current velocity.	1…2	unsign 16 bit	0 … +20000	–	mm/s	(in/100)/s	16 h
e **Velocity hysteresis**	Relative shift to prevent signal bouncing.	3…4	unsign 16 bit	0 … +20000	–	mm/s	(in/100)/s	–
f **Limit value range start**	The velocity limit value is monitored beginning at this position.	5…8	sign 32 bit	-999999 … +999999	**0**	mm	in/100	–
g **Limit value range end**	The velocity limit value is monitored up to this position.	9 … 12	sign 32 bit	-999999 … +999999	**0**	mm	in/100	–
Output data length: 13 bytes consistently								

9.9.3.16 Module 16: Velocity status

PROFINET module identifier

Module-ID 1016

Submodule-ID 1

Description

This module supplies the PROFINET master with various status information for velocity measurement.

Parameters

None

Input data

Input data	Description	Rel. addr.	Data type	Value	Default	Unit		CR to module
						metr.	Inch	
a **Velocity measurement error**	Signals that no valid velocity could be ascertained.	1.0	Bit	0: OK 1: Error	–	–		–
b **Movement status**	Signals whether a movement >0.1 m/s is currently being detected.	1.1	Bit	0: No movement 1: Movement	–	–		–
c **Movement direction**	When the movement status is activated, this bit indicates the direction.	1.2	Bit	0: Positive direction 1: Negative direction	–	–		–
d **Velocity limit value status 1**	Signals that limit value 1 has been exceeded.	1.3	Bit	0: Limit value maintained 1: Limit value violated	–	–		11c
e **Velocity limit value status 2**	Signals that limit value 2 has been exceeded.	1.4	Bit	0: Limit value maintained 1: Limit value violated	–	–		12c
f **Velocity limit value status 3**	Signals that limit value 3 has been exceeded.	1.5	Bit	0: Limit value maintained 1: Limit value violated	–	–		13c
g **Velocity limit value status 4**	Signals that limit value 4 has been exceeded.	1.6	Bit	0: Limit value maintained 1: Limit value violated	–	–		14c
h **Dynamic velocity limit value status**	Signals that the dynamic limit value has been exceeded.	1.7	Bit	0: Limit value maintained 1: Limit value violated	–	–		15bd
i **Velocity comparison limit value 1**	Signals whether the current velocity is compared with this limit value.	0.3	Bit	0: Comparison not active 1: Comparison active	–	–		–
j **Velocity comparison limit value 2**	Signals whether the current velocity is compared with this limit value.	0.4	Bit	0: Comparison not active 1: Comparison active	–	–		–

k **Velocity comparison limit value 3**	Signals whether the current velocity is compared with this limit value.	0.5	Bit	0: Comparison not active 1: Comparison active	–	–	–
l **Velocity comparison limit value 4**	Signals whether the current velocity is compared with this limit value.	0.6	Bit	0: Comparison not active 1: Comparison active	–	–	–
m **Dynamic velocity comparison**	Signals whether the current velocity is compared with this limit value.	0.7	Bit	0: Comparison not active 1: Comparison active	–	–	–
Input data length: 2 bytes							

Output data

None

9.9.3.17 Module 18: Other

PROFINET module identifier

Module-ID 1018

Submodule-ID 1

Description

General operating parameters such as display language, lighting and contrast, password, heating control, etc. are set in this module.

Parameters

Parameter	Description	Rel. addr.	Data type	Value	Default	Unit		CR to module
						metr.	Inch	
a **Language selection**	Language selection for the display. A language which was selected via the display is overwritten by this parameter.	0.0 … 0.2	Bit	**000=0: English** 001=1: German 010=2: Italian 011=3: Spanish 100=4: French	**0**	–		–
b **Display illumination**	Off after 10 min. or always on.	0.3	Bit	**0: Off after 10 min.** 1: Always on	**0**	–		–
c **Display contrast**	Contrast setting of the display. The contrast changes under extreme ambient temperatures and can be adjusted with this parameter.	0.4 … 0.5	Bit	000=0: Weak **001=1: Medium** 010=2: Strong	**1**	–		–
d **Password protection**	Password protection on/off.	0.7	Bit	**0: OFF** 1: ON	**0**	–		–
e **Password**	Specifies the password. Password protection must be on.	1…2	unsign 16 bit	0000 … 9999	**0000**	–		–
f **Heating control**	Defines a switch-on/switch-off range for the heating control. The extended switch-on/switch-off range for heating may provide relief in the event of condensation problems. There is no guarantee that no condensation will occur on the optics in the extended switch-on/switch-off range due to the limited heating capacity. This parameter is available as standard, but functions only for devices with integrated heating (AMS 348*i*… H).	3.0	Bit	**0 = Standard** **$T_{amb.}$ < 10 °C: heating on** **$T_{amb.}$ > 15 °C: heating off** 1 = Extended $T_{amb.}$ < 30 °C: heating on $T_{amb.}$ > 35 °C: heating off	**0**	–		–
Parameter length: 4 bytes								

Input data

None

Output data

None

9.9.3.18 Module 20: free resolution

PROFINET module identifier

Module-ID 1020

Submodule-ID 1

Description

Free resolution is used when the resolutions set in the standard are not appropriate. If a free resolution is used, this must be activated in module 1c for the position or in module 10a for the velocity.

Both module 20 and module 1c or 10a must be set for configuration of the free resolution.

Parameters

Parameter	Description	Rel. addr.	Data type	Value	Default	Unit		CR to module
						metr.	Inch	
a **Free resolution position**	This module allows the output measurement values for position and velocity to be freely scaled. The parameters apply to all interfaces for which the “free resolution” resolution was selected. The internal measurement value is multiplied by the set value on the basis of (mm/1000). Example: Value “3000” means that in the event of a change in the measurement value by 3 mm, the position value in the binary code changes by binary 1. Due to the free resolution in the example, an internal measurement value of 3333 mm gives an output value of “1111”. The resolution of the “Offset", "Preset" and "Limit values" parameters is not affected by free resolution.	0 … 1	unsign 16 bit	5 …50000	**1000**	mm/10^3	in/10^5	1c
b **Free resolution velocity**		2 … 3	unsign 16 bit	5 …50000	**1000**	(mm/10^3)/s	(in/10^5)/s	10a
Parameter length: 4 bytes								

10 Diagnostics and troubleshooting

For the PROFINET, there are two different options for diagnosis.

Event-related diagnostics

PROFINET transmits events within an automation process as alarms that must be acknowledged by the application process.

The following events are possible:

- Process alarms: Events that originate from the process and are reported to the control.
- Diagnostic alarms: Events that indicate the malfunctioning of an IO device.
- Maintenance alarms: Transmission of information to avoid the failure of a device through preventative maintenance work.
- Manufacturer-specific diagnostics

To identify the alarms uniquely, they are always reported via a slot/subslot. The user can prioritize diagnostic and process alarms differently.

State-related diagnostics

In addition, all alarms are entered into the diagnostics buffer. If required, this buffer can be read by a primary instance via acyclic read services.

A further option to report malfunctioning or status changes in a field device to a plant control is to enter low-priority diagnostic or status messages into the diagnostic buffer only instead of actively reporting them to the primary control.

This option can also be used for preventative maintenance or for low-priority warnings, for example.

The AMS 348*i* uses both the event-related diagnostics for high-prioritized events/errors as well as the state-related diagnostics for preventative maintenance and the signaling of low-prioritized events or warnings.

The following alarms and diagnostics messages are supported:

Diagnostics	Description	AMS 348*i* category	API/ Slot/ Subslot	Type	Coming/ going	Remark
Parameter error	Error in the configuration of a module.	Error	0/n[1)]/0	Diagnostics alarm[2)]	Coming only	
Configuration error	Error in the configuration of a module.	Error	0/n/0	Diagnostics alarm	Coming only	

1) n = module number
2) Only diagnostics or process alarms actually trigger the transmission of an alarm. All other types (preventative maintenance and status messages) only lead to an entry into the diagnostics buffer and are thus part of the state-based diagnostics.

Table 10.1: AMS 348*i* alarm and diagnostics messages

10.1 Service and diagnostics in the display of the AMS 348*i*

In the main menu of the AMS 348*i*, expanded "Diagnostics" can be called up under the Service heading.

```
Service
 Status messages
 Diagnostics
 Expanded diagnostics
```

From the Service main menu, press the enter button ↵ to access the underlying menu level.

Use the up/down buttons ▲ ▼ to select the corresponding menu item in the selected level; use the enter button ↵ to activate the selection.

Return from any sub-level to the next-higher menu item by pressing the ESC button ESC.

10.1.1 Status messages

The status messages are written in a ring memory with 25 positions. The ring memory is organized according to the FIFO principle. No separate activation is necessary for storing the status messages. Power OFF clears the ring memory.

```
Status messages
1: - / - / -
2: - / - / -
3: - / - / -
```

Basic representation of the status messages

n: Type / No. / 1

Meaning:

n:	memory position in the ring memory
Type:	type of message: **I** = info, **W** = warning, **E** = error, **F** = severe system error
No:	internal error detection
1:	frequency of the event (always "1", since no summation occurs)

The status messages within the ring memory are selected with the up/down buttons ▲ ▼. The enter button ↵ can be used to call up **detailed information** on the corresponding status messages with the following details:

Detailed information about a status message

Type: type of message + internal counter

UID: Leuze internal coding of the message

ID: description of the message

Info: not currently used

Within the detailed information, the enter button ↵ can be pressed again to activate an **action menu** with the following functions:

- Acknowledge message
- Delete message
- Acknowledge all
- Delete all

10.1.2 Diagnostics

The diagnostics function is activated by selecting the `Diagnostics` menu item. The ESC button ESC deactivates the diagnostics function and clears the contents of the recordings.

The recorded diagnostic data are displayed in 2 fields. In the upper half of the display, status messages of the AMS and the bar graph are displayed. The lower half contains information that assists in a Leuze-internal evaluation.

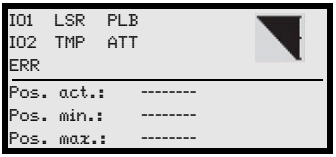

Use the up/down buttons ▲ ▼ to scroll in the bottom half between various displays. The contents of the scrollable pages are intended solely for Leuze for internal evaluation.

The diagnostics have no influence on the communication to the host interface and can be activated during operation of the AMS 348*i*.

10.1.3 Expanded diagnostics

The `Expanded diagnostics` menu item is used for Leuze-internal evaluation.

10.2 General causes of errors

LINK LED for BUS IN and BUS OUT

A green/orange multicolor LED below the BUS IN and BUS OUT connectors indicates the EtherNet/PROFINET connection status.

Green continuous light — **LINK LED green**

- The link exists, the hardware connection to the next connected participant is OK.The LED signals the same status as "LNK0" and "LNK1" in the display.

Orange flashing — **LINK LED flashing orange (ACT0/ACT1)**

- Data is exchanged with the connected participants.

10.2.1 Power LED

See also chapter 8.2.2.

Error	Possible error cause	Measure
PWR LED "OFF"	No supply voltage connected	Check supply voltage.
	Hardware error	Send in device.
PWR-LED "flashes red"	Light beam interruption	Check alignment.
	Plausibility error	Traverse rate >10m/s.
PWR-LED "static red"	Hardware error	For error description, see display, It may be necessary to send in the device.

Table 10.2: General causes of errors

10.3 Interface errors

10.3.1 BUS LED

Error	Possible error cause	Measure
BUS LED "OFF"	No supply voltage connected to the device	Check supply voltage.
	Device not yet recognized by the PROFINET	Send device to customer service.
	Hardware error	

Table 10.3: Bus error

Error	Possible error cause	Measure
BUS-LED "flashes red"	Incorrect wiring.	Check wiring.
	Communication error: parameterization or configuration failed ("parameter failure") IO Error: no data exchange	• Check configuration, in particular with respect to address assignment (device names/IP address/ MAC ID). • Carry out a reset on the control.
BUS LED "static red"	Incorrect wiring.	Check wiring.
	Communication error on the PROFINET. No communication established to the controller (no data exchange)	• Check protocol settings. • Check configuration, in particular with respect to address assignment (device names/IP address/ MAC ID).
	Different protocol settings	Check protocol settings.
	Protocol not released	Activate TCP/ IP or UDP.
	Wrong device name set	• Check configuration, in particular with respect to address assignment (device names/IP address/ MAC ID).
	Incorrect configuration	• Check configuration, in particular with respect to address assignment (device names/IP address/ MAC ID). • Send device to customer service.
Sporadic network error	Check wiring for proper contacting	Check wiring, • In particular, check wire shielding. • Check wires used.
	EMC coupling	• Observe contact quality of screwed or soldered contacts in the wiring. • Avoid EMC coupling caused by power cables laid parallel to device lines. • Separate laying of power and data communications cables.
	Network expansion exceeded	Check max. network expansion as a function of the max. cable lengths.

Table 10.3: Bus error

10.4 Status display in the display of the AMS 348*i*

Display	Possible error cause	Measure
PLB (implausible measurement values)	Laser beam interruption	Laser spot must always be incident on the reflector.
	Laser spot outside of reflector	Traverse rate < 10 m/s?
	Measurement range for maximum distance exceeded	Restrict traversing path or select AMS with larger measurement range.
	Velocity greater than 10 m/s	Reduce velocity.
	Ambient temperature far outside of the permissible range (TMP display; PLB)	Select AMS with heating or ensure cooling.
ATT (insufficient received signal level)	Reflector soiled	Clean reflector or glass lens.
	Glass lens of the AMS soiled	
	Performance reduction due to snow, rain, fog, condensing vapor, or heavily polluted air (oil mist, dust)	Optimize usage conditions.
	Laser spot only partially on the reflector	Check alignment.
	Protective foil on the reflector	Remove protective foil from reflector.

Display	Possible error cause	Measure
TMP (operating temperature outside of specification)	Ambient temperatures outside of the specified range	In case of low temperatures, remedy may be an AMS with heating. If temperatures are too high, provide cooling or change mounting location.
LSR Laser diode warning	Laser diode prefailure message	Send in device at next possible opportunity to have laser diode replaced. Have replacement device ready.
ERR Hardware error.	Indicates an uncorrectable error in the hardware	Send in device for repair.

Notice!

*Please use **chapter 10 as a master copy** should servicing be required.*
Cross the items in the "Measures" column which you have already examined, fill out the following address field and fax the pages together with your service contract to the fax number listed below.

Customer data (please complete)

Device type:	
Company:	
Contact partner / department:	
Phone (direct):	
Fax:	
Street / No:	
ZIP code/City:	
Country:	

Leuze Service fax number:

+49 7021 573 - 199

11 Type overview and accessories

11.1 Type key

AMS 3xx *i* yyy H

Heating option	H =	With heating
Sensing distance	40	Max. operating range in m
	120	Max. operating range in m
	200	Max. operating range in m
	300	Max. operating range in m
	i =	Integrated fieldbus technology
Interface	00	RS 422/RS 232
	01	RS 485
	04	PROFIBUS DP / SSI
	08	TCP/IP
	35	CANopen
	38	EtherCAT
	48	PROFINET RT
	55	DeviceNet
	58	Ethernet/IP
	84	Interbus
	AMS	**A**bsolute **M**easuring **S**ystem

11.2 Type overview AMS 348*i* (PROFINET)

Type designation	Description	Part no.
AMS 348*i* 40	40 m operating range, PROFINET interface	50113709
AMS 348*i* 120	120 m operating range, PROFINET interface	50113710
AMS 348*i* 200	200 m operating range, PROFINET interface	50113711
AMS 348*i* 300	300 m operating range, PROFINET interface	50113712
AMS 348*i* 40 H	40 m operating range, PROFINET interface, integrated heating	50113713
AMS 348*i* 120 H	120 m operating range, PROFINET interface, integrated heating	50113714
AMS 348*i* 200 H	200 m operating range, PROFINET interface, integrated heating	50113715
AMS 348*i* 300 H	300 m operating range, PROFINET interface, integrated heating	50113716

Table 11.1: Type overview AMS 348*i*

11.3 Overview of reflector types

Type designation	Description	Part no.
Reflective tape 200x200-S	Reflective tape, 200x200mm, self-adhesive	50104361
Reflective tape 500x500-S	Reflective tape, 500x500mm, self-adhesive	50104362
Reflective tape 914x914-S	Reflective tape, 914x914mm, self-adhesive	50108988
Reflective tape 200x200-M	Reflective tape, 200x200mm, affixed to aluminum plate	50104364
Reflective tape 500x500-M	Reflective tape, 500x500mm, affixed to aluminum plate	50104365
Reflective tape 914x914-M	Reflective tape, 914x914mm, affixed to aluminum plate	50104366
Reflective tape 200x200-H	Heated reflective tape, 200 x 200mm	50115020
Reflective tape 500x500-H	Heated reflective tape, 500 x 500mm	50115021
Reflective tape 914x914-H	Heated reflective tape, 914 x 914mm	50115022

Table 11.2: Overview of reflector types

11.4 Accessories

11.4.1 Accessory mounting bracket

Type designation	Description	Part no.
MW OMS/AMS 01	Mounting bracket for mounting the AMS 348*i* to horizontal surfaces	50107255

Table 11.3: Accessory mounting bracket

11.4.2 Accessory deflector unit

Type designation	Description	Part no.
US AMS 01	Deflector unit with integrated mounting bracket for the AMS 348*i*. Variable 90° deflection of the laser beam in various directions	50104479
US 1 OMS	Deflector unit without mounting bracket for simple 90° deflection of the laser beam	50035630

Table 11.4: Accessory deflector unit

11.4.3 Accessory M12 connector

Type designation	Description	Part no.
S-M12A-ET	M12 connector, Ethernet, D-coded, BUS IN, BUS OUT	50112155
KDS ET M12/RJ45 W - 4P	Converter from M12 D-coded to RJ45 socket	50109832
KD 095-5A	M12 connector, A-coded socket, Power (PWR)	50020501

Table 11.5: Accessory M12 connector

11.4.4 Accessory ready-made cables for voltage supply

Contact assignment/wire color of PWR connection cable

PWR connection cable (5-pin socket, A-coded)

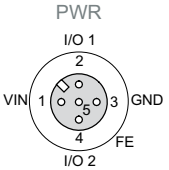

M12 socket (A-coded)

Pin	Name	Core color
1	VIN	**brown**
2	I/O 1	**white**
3	GND	**blue**
4	I/O 2	**black**
5	FE	**gray**
Thread	FE	**bare**

Specifications of the cables for voltage supply

Operating temperature range in rest state: -30°C … +70°C
in motion: -5°C … +70°C

Material sheathing: PVC

Bending radius > 50 mm

Order codes of the cables for voltage supply

Type designation	Description	Part no.
KD U-M12-5A-V1-050	M12 socket, A-coded, axial plug outlet, open cable end, cable length 5 m	50132079
KD U-M12-5A-V1-100	M12 socket, A-coded, axial plug outlet, open cable end, cable length 10 m	50132080

11.4.5 Accessory ready-made cables for PROFINET

General

- Cable **KB ET…** for connecting to PROFINET via M12 connector
- Standard cable available in lengths from 2 … 30m
- Special cables on request.

Contact assignments M12 PROFINET connection cable KB ET …-SA

M12 PROFINET connection cable (4-pin connector, D-coded, on both sides)			
EtherNet 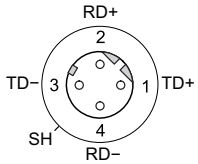 **M12 connector (D-coded)**	**Pin**	**Name**	**Core color**
	1	TD+	**yellow**
	2	RD+	**white**
	3	TD-	**orange**
	4	RD-	**blue**
	SH (thread)	FE	**bare**

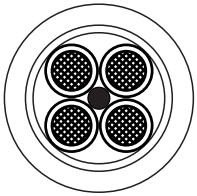

Core colors

WH
YE
BU
OG

Conductor class: VDE 0295, EN 60228, IEC 60228 (Class 5)

Accessories M12 PROFINET connection cable, open cable end

Cable designation: KS ET-M12-4A-P7-…

Accessories PROFINET connection cable with both-sided D-coded M12 plug

Cable designation: KSS ET-M12-4A-M12-4A-P7-…, cable assignment 1:1, not crossed

Accessories PROFINET connection cable, M12/RJ45

Cable designation: KSS ET-M12-4A-RJ45-A-P7-…

Notice for connecting the PROFINET interface!

The entire connection cable must be shielded. The shielding connection must be at the same potential on both ends of the data line. This prevents potential compensating currents over the shield and possible interference coupling by compensating currents. The signal lines must be stranded in pairs.
Use CAT 5 cable for the connection.

Specifications of the PROFINET connection cable

Operating temperature range in rest state: -50°C … +80°C
in motion: -25°C … +80°C
in motion: -25°C … +60°C (when used with drag chains)

Material cable sheath: PUR (green), wire insulation: PE foam, free of halogens, silicone and PVC

Bending radius > 65 mm, suitable for drag chains
Bending cycles > 10^6, perm. acceleration < 5 m/s^2

Order codes for PROFINET connection cables

Type designation	Description	Part no.
M12 plug for BUS IN, axial connector, open cable end		
KS ET-M12-4A-P7-020	Cable length 2 m	50135073
KS ET-M12-4A-P7-050	Cable length 5 m	50135074
KS ET-M12-4A-P7-100	Cable length 10 m	50135075
KS ET-M12-4A-P7-150	Cable length 15 m	50135076
KS ET-M12-4A-P7-300	Cable length 30 m	50135077
M12 plug for BUS IN to RJ-45 connector		
KSS ET-M12-4A-RJ45-A-P7-020	Cable length 2 m, cable 1:1, not crossed	50135080
KSS ET-M12-4A-RJ45-A-P7-050	Cable length 5 m, cable 1:1, not crossed	50135081
KSS ET-M12-4A-RJ45-A-P7-100	Cable length 10 m, cable 1:1, not crossed	50135082
KSS ET-M12-4A-RJ45-A-P7-150	Cable length 15 m, cable 1:1, not crossed	50135083
KSS ET-M12-4A-RJ45-A-P7-300	Cable length 30 m, cable 1:1, not crossed	50135084
M12 plug + M12 plug for BUS OUT to BUS IN		
KSS ET-M12-4A-M12-4A-P7-020	Cable length 2 m, cable 1:1, not crossed	50137077
KSS ET-M12-4A-M12-4A-P7-050	Cable length 5 m, cable 1:1, not crossed	50137078
KSS ET-M12-4A-M12-4A-P7-100	Cable length 10 m, cable 1:1, not crossed	50137079
KSS ET-M12-4A-M12-4A-P7-150	Cable length 15 m, cable 1:1, not crossed	50137080

12 Maintenance

12.1 General maintenance information

With normal use, the laser measurement system does not require any maintenance by the operator.

Cleaning

In the event of dust build-up or if the (ATT) warning message is displayed, clean the device with a soft cloth; use a cleaning agent (commercially available glass cleaner) if necessary.

Also check the reflector for possible soiling.

Attention!

Do not use solvents and cleaning agents containing acetone. Use of such solvents could blur the reflector, the housing window and the display.

12.2 Repairs, servicing

Attention!

Access to or changes on the device, except where expressly described in this operating manual, are not authorized.
The device must not be opened. Failure to comply will render the guarantee void. Warranted features cannot be guaranteed after the device has been opened.

Repairs to the device must only be carried out by the manufacturer.

↳ *Contact your Leuze distributor or service organization should repairs be required. The addresses can be found on the inside of the cover and on the back.*

Notice!

When sending the laser measurement systems to Leuze electronic for repair, please provide an accurate description of the error.

12.3 Disassembling, packing, disposing

Repacking

For later reuse, the device is to be packed so that it is protected.

Notice!

Electrical scrap is a special waste product! Observe the locally applicable regulations regarding disposal of the product.

A

Accessories 102
Accessory deflector unit 103
Accessory mounting bracket 103
Accessory ready-made cables 104
Accuracy 14
Activation 75
Air humidity 15
Alignment 20
ATT 79
Average 85

B

BUS LED 43

C

Cleaning 107
Commissioning and configuration 57
Commissioning steps at a glance 12
Configuration steps 60
Conformance Classes 58
Connections
  PROFINET BUS IN 38
  PROFINET BUS OUT 39
  PWR IN 38
  Service 39
contouring error calculation 14
Control 69, 79
Control buttons 44
Control panel 40
Count direction 72
Counting direction 72

D

Declaration of conformity 5
Deflector unit
  Maximum ranges 24
  With integrated mounting bracket 24
  Without mounting bracket 26
Deflector unit US 1 OMS
  Dimensioned drawing 26
Deflector unit US AMS 01
  Dimensioned drawing 25
Description of functions 6
Device naming 63, 65
Diagnostics 96
Dimensioned drawing of AMS 3xxi 16
Direction selection 86, 88
Display 40
  Contrast 94
  Illumination 94, 95
Dynamic velocity comparison 93
Dynamic velocity limit value status 92

E

Electrical connection 37
  Safety notices 37
ERR 79
Error delay (position) 83
Error delay (velocity) 84
Error delay time (position) 83
Error delay time (velocity) 84
Error handling procedures 69, 83
Event-related diagnostics 96
Expanded diagnostics 98
Explanation of symbols 5

F

Flashing of the participant 66
Free resolution 95
Function 75

G

General causes of errors 98
GSD file 60, 67
GSD modules 69

H

Hardware 79
Heated reflectors
  Dimensioned drawing 31
  Specifications 30
Heating control 94

I

I/O 1 69
I/O 2 69
Identification & Maintenance Functions 53
Input 76
Input/output

IO 1 75
IO 2 77
Installation 18
Intensity 79
Interface errors 99
Interface info in display 41
Internal hardware error 41

L

Language selection 94
Laser 79
Laser status 79
LED LINK 44
Limit value 1 range end 87
Limit value 1 range start 87
Lower position limit value 79
LSR 79
LSR status display 101

M

MAC ID 63
Main menu
Device information 45
Language selection 46
Network information 45
Parameter 46
Service 46
Maintenance 107
Maximum position value 69, 71, 72
Measurement range 14
Measurement unit 71
Menus
Language selection menu 50
Main menu 45
Parameter menu 47
Service menu 50
Mounting 19
with laser beam deflector unit 24
Mounting bracket(optional) 21
Mounting distances 22
Movement status 92

N

Name plates 18
Network operation 13

O

Offset 72
Operating principle 12
Operating temperature 15
Operation 40, 51
Output 75, 76
Output time 14
Overview of reflector types 103

P

Packaging 18
Parameter enabling 51, 52
Parameter menu
I/O 48
Maximum position value 47
Other 49
Parameter handling 47
PROFINET 47
Password 94
Plausibility 79
Plausibility error 41
PLB 79
Position limit value 81, 82
Position limit value 1 69
Position limit value 2 69
Position value in the case of error 83
Prefailure message 41
Preset 73, 74
Dynamic 69, 74
Static 69, 73
Preset reset 74
Preset status 79
Preset teach 74, 79
PROFINET
Cable lengths and shielding 55
Linear topology 54
Star topology 54
Wiring 55
PROFINET communication profile 57
PROFINET interface 53
PWR LED 42

Q

Quality assurance 5

R

Received signal 41
Reflective tape

Dimensioned drawing 29
Specifications 28
Reflector 27
Mounting 33
Pitch 36
Size 32
Type overview 32
Repair 107
Reserved 79
Resolution 71
Response time 14

S

Sensing distance 102
Servicing 107
Siemens Simatic S7 control 60
Sign 71
Specifications 14
Dimensioned drawing 16
General specifications 14
Reflective tapes 27
Stand-alone operation 13
State-related diagnostics 96
Status 69, 79
Status and measurement data - main menu 46
Status- and warning messages 40
Status display 40
ATT 100
ERR 101
PLB 100
TMP 101
Status display in the display 100
Status displays 42
Status messages 97
Storage 18
Storage temperature 15
Supply voltage 14
Suppress position status 83
Suppress velocity status 83
Surface reflections 34
Switching mode 86, 88
Symbols 5

T

Temperature 79
Temperature monitoring 41
TMP 79
Transport 18
Troubleshooting 96
Type overview 17, 102

U

Upper position limit value 79

V

Velocity 69, 85
Dynamic limit value 70, 91
Limit value 1 . . . . . 70, 86
Limit value 2 . . . . . 70, 88
Limit value 3 . . . . . 70, 89
Limit value 4 . . . . . 70, 90
Status 70, 92
Velocity comparison limit value 1 92
Velocity comparison limit value 2 92
Velocity comparison limit value 3 93
Velocity comparison limit value 4 93
Velocity hysteresis 86, 88
Velocity in the case of error 83
Velocity limit value 86, 88
Velocity limit value status 1 92
Velocity limit value status 2 92
Velocity limit value status 3 92
Velocity limit value status 4 92
Velocity measurement error 92
Velocity resolution 85

W

Waving of the participant 66

Level 1 ▲▼ : selection	Level 2 ▲▼ : selection ESC : back	Level 3 ▲▼ : selection ESC : back	Level 4 ▲▼ : selection ESC : back	Level 5 ▲▼ : selection ESC : back	Selection/configuration option ▲▼ : selection ↵ : activate ESC : back	Detailed information on
Device information						page 45
Network information						page 45
Status- and measurement data						page 45
Parameter ↵	Parameter handling	↵ Parameter enabling			ON / OFF	page 47
		↵ Password	↵ Activate password		ON / OFF	
			↵ Password entry		Configuration option of a four-digit numerical password	
		↵ Parameters to default			All parameters are reset to their factory settings	
	↵ PROFINET	↵ Activation			ON / OFF	page 47
	↵ Maximum position value	↵ Measurement unit			Metric/Inch	page 47
		↵ Count direction			Positive/Negative	
		↵ Offset			Value input:	
		↵ Preset			Value input	
		↵ Error delay			ON / OFF	
		↵ Position value in the case of error			Last valid value / zero	
		↵ Free resolution value			5 …50000	
	↵ I/O	↵ I/O 1	↵ Port configuration		Input/Output	page 48
			↵ Switching input	↵ Function	No function/preset teach/laser ON/OFF	
				↵ Activation	Low active/High active	
			↵ Switching output	↵ Function	Pos. limit value 1 / Pos. limit value 2 / Velocity / Intensity (ATT) / Temp. (TMP) / Laser (LSR) / Plausibility (PLB) / Hardware (ERR)	
				↵ Activation	Low active/High active	
		↵ I/O 2	↵ Port configuration		Input/Output	
			↵ Switching input	↵ Function	No function/preset teach/laser ON/OFF	
				↵ Activation	Low active/High active	
			↵ Switching output	↵ Function	Pos. limit value 1 / Pos. limit value 2 / Velocity / Intensity (ATT) / Temp. (TMP) / Laser (LSR) / Plausibility (PLB) / Hardware (ERR)	
				↵ Activation	Low active/High active	
		↵ Limit values	↵ Upper pos. limit 1	↵ Activation	ON / OFF	
				↵ Limit value input	Value input in mm or inch/100	
			↵ Lower pos. limit 1	↵ Activation	ON / OFF	
				↵ Limit value input	Value input in mm or inch/100	
			↵ Upper pos. limit 2	↵ Activation	ON / OFF	
				↵ Limit value input	Value input in mm or inch/100	
			↵ Lower pos. limit 2	↵ Activation	ON / OFF	
				↵ Limit value input	Value input in mm or inch/100	
			↵ Max. velocity	↵ Activation	ON / OFF	
				↵ Max. velocity	Value input in mm/s or inch/100s	

		Other	Heating control			Standard (Heating: on < 10°C, off > 15°C) / extended (Heating: on < 30°C, off > 35°C)	page 49
			Display background			10 minutes/ON	
			Display contrast			Weak/Medium/Strong	
			Service RS232	Baud rate		57.6 kbit/s / 115.2 kbit/s	
				Format		8,e,1 / 8,n,1	
Language selection						Deutsch / English / Español / Français / Italiano	page 50
Service		Status messages					page 50
		Diagnostics				Exclusively for service purposes by Leuze electronic	
		Expanded diagnostics				Exclusively for service purposes by Leuze electronic	