Leuze

Original operating instructions

BCL 248i
Bar code reader

The Sensor People

We reserve the right to make technical changes
EN • 2020-08-26 • 50144275

ПРОМЭЛЕКТРОНИКА / sales@prom-elec.com

© 2021
Leuze electronic GmbH + Co. KG
In der Braike 1
73277 Owen / Germany
Phone: +49 7021 573-0
Fax: +49 7021 573-199
www.leuze.com
info@leuze.com

1 About this document ... 7

2 Safety ... 9

2.1 Intended use ... 9

2.2 Foreseeable misuse ... 9

2.3 Competent persons ... 10

2.4 Disclaimer ... 10

2.5 Laser safety notices ... 10

3 Fast commissioning ... 11

3.1 Mounting ... 11

3.2 Selecting a mounting location ... 11

3.3 Electrical connection ... 11

3.4 Preparatory settings ... 12

3.4.1 Commissioning the BCL 248i on the PROFINET-IO ... 12

3.4.2 Prepare the control ... 12

3.4.3 Installing GSD file ... 13

3.4.4 Configuration ... 13

3.4.5 Transmit the configuration to the IO controller ... 13

3.4.6 Setting the device name – device naming ... 14

3.4.7 Check device name ... 15

3.5 Further settings ... 15

3.6 Starting the device ... 15

3.7 Bar code reading ... 16

4 Device description ... 17

4.1 Device overview ... 17

4.2 Performance characteristics ... 17

4.3 Device construction ... 19

4.4 Display elements ... 19

4.5 Reading techniques ... 21

4.5.1 Line scanner (single line) ... 21

4.5.2 Raster scanner (raster line) ... 22

4.6 Fieldbus systems ... 23

4.6.1 PROFINET-IO ... 23

4.6.2 PROFINET-IO – star topology ... 25

4.7 autoReflAct ... 25

4.8 Reference codes ... 26

4.9 autoConfig ... 26

5 Mounting ... 27

5.1 Transport and storage ... 27

5.2 Mounting ... 27

5.2.1 Mounting with M4 fastening screws ... 27

5.2.2 Mounting with BT 56 or BT 56-1 mounting device ... 28

5.2.3 Mounting with BT 300-1 mounting device ... 28

5.2.4 Mounting with the BT 300 W mounting bracket ... 28

5.3 Selecting a mounting location ... 28

5.4 Cleaning ... 30

6 Electrical connection ... 31

6.1 PWR/SWIO (supply voltage, switching input and switching output) ... 32

6.2 HOST (PROFINET, cable assignments) ... 34
6.3 PROFINET-IO topologies ... 35
6.4 Cable lengths and shielding ... 35

7 Starting up the device – Leuze webConfig tool ... 36

7.1 System requirements ... 36
7.2 Start webConfig tool ... 36
7.3 Short description of the webConfig tool ... 37
7.3.1 CONFIGURATION menu ... 37

8 Starting up the device - Configuration ... 39

8.1 PROFINET-IO ... 39
8.2 Starting the device ... 39
8.3 Configuration steps for a Siemens Simatic S7 control ... 40
8.3.1 Step 1 – Prepare the control ... 40
8.3.2 Step 2 – Installing GSD file ... 40
8.3.3 Step 3 – Hardware configuration of the S7 PLC: Configuration ... 41
8.3.4 Step 4 – Transmit the configuration to the IO controller ... 41
8.3.5 Step 5 – Set device name – device naming ... 42
8.3.6 Step 6 – Check device name ... 43
8.3.7 Manually setting the IP address ... 43
8.3.8 MAC address ... 44
8.3.9 Ethernet host communication ... 45
8.3.10 TCP/IP ... 45
8.3.11 UDP ... 46
8.4 Commissioning via the PROFINET-IO ... 46
8.4.1 General information ... 46
8.4.2 Permanently defined parameters/device parameters ... 47
8.5 Overview of the project modules ... 51
8.6 Decoder modules ... 55
8.6.1 Modules 1-4 – Code table extensions 1 to 4 ... 55
8.6.2 Module 5 – Code type features (symbology) ... 56
8.6.3 Module 7 – Code reconstruction technology ... 58
8.7 Control modules ... 59
8.7.1 Module 10 – Activations ... 59
8.7.2 Module 11 – Reading gate control ... 60
8.7.3 Module 12 – Multi-label ... 62
8.7.4 Module 13 – Fragmented read result ... 63
8.7.5 Module 14 – Interlinked read result ... 63
8.8 Result format ... 64
8.8.1 Module 20 – Decoder state ... 64
8.8.2 Modules 21-29 – Decoding result ... 66
8.8.3 Module 30 – Data formatting ... 68
8.8.4 Module 31 – Reading gate number ... 69
8.8.5 Module 32 – Reading gate time ... 69
8.8.6 Module 33 – Code position ... 70
8.8.7 Module 34 – Reading reliability (equal scans) ... 70
8.8.8 Module 35 – Bar code length ... 71
8.8.9 Module 36 – Scans with information ... 71
8.8.10 Module 37 – Decoding quality ... 72
8.8.11 Module 38 – Code direction ... 72
8.8.12 Module 39 – Number of digits ... 73
8.8.13 Module 40 – Code type (symbology) ... 73
8.9 Data Processing ... 74
8.9.1 Module 50 – Characteristics filter ... 74
8.9.2 Module 51 – Data filtering ... 75
8.10 Identifier ... 76

8.10.1 Module 52 – Segmentation acc. to the EAN process ... 76
8.10.2 Module 53 – Segmentation via fixed positions ... 78
8.10.3 Module 54 – Segmentation according to identifier and separator ... 80
8.10.4 Module 55 – String handling parameters ... 82

8.11 Device functions ... 82
8.11.1 Module 60 – Device status ... 82
8.11.2 Module 61 – Laser control ... 84
8.11.3 Module 63 – Alignment ... 84

8.12 Switching inputs/outputs SWIO 1/2 ... 85
8.12.1 Parameters for operating as an output ... 85
8.12.2 Parameters for operating as an input ... 87
8.12.3 Switch-on and switch-off functions for operation as an output ... 88
8.12.4 Input functions for operation as an input ... 88
8.12.5 Module 70 – Switching input SWI1 ... 89
8.12.6 Module 71 – Switching output SWO2 ... 90
8.12.7 Module 74 – SWIO status and control ... 91

8.13 Data output ... 92
8.13.1 Module 80 – Sorting ... 92

8.14 Reference code comparison ... 94
8.14.1 Module 81 – Reference code comparator 1 ... 94
8.14.2 Module 82 – Reference code comparator 2 ... 96
8.14.3 Module 83 – Reference code comparison pattern 1 ... 98
8.14.4 Module 84 – Reference code comparison pattern 2 ... 99

8.15 Special functions ... 101
8.15.1 Module 90 – Status and control ... 101
8.15.2 Module 91 – AutoReflAct (automatic reflector activation) ... 101
8.15.3 Module 92 – AutoControl ... 102
8.15.4 Module 100 – multiScan master ... 103
8.15.5 Module 101 – multiScan slave addresses 1 ... 105
8.15.6 Module 102 – multiScan slave addresses 2 ... 106

8.16 Example configuration: Indirect activation via the PLC ... 106
8.16.1 Task ... 106
8.16.2 Procedure ... 107

8.17 Example configuration: Direct activation via the switching input ... 108
8.17.1 Task ... 108
8.17.2 Procedure ... 108

9 Online commands ... 110

9.1 Overview of commands and parameters ... 110

9.2 General online commands ... 110

9.3 Online commands for system control ... 116

9.4 Online commands for configuration of switching inputs/outputs ... 117

9.5 Online commands for the parameter set operations ... 118

10 Care, maintenance and disposal ... 123

11 Diagnostics and troubleshooting ... 124

11.1 Error signaling via LED ... 124

11.2 Interface error ... 125

12 Service and support ... 126

13 Technical data ... 127

13.1 General specifications ... 127

13.2 Reading fields ... 129
13.2.1 Bar code characteristics ... 129
13.2.2 Raster scanner ... 129

13.2.3 Reading field curves 130
13.3 Dimensioned drawings 132

14 Order guide and accessories 133
14.1 Part number code 133
14.2 Type overview 133
14.3 Accessories – connection technology 133
14.4 Accessories – mounting systems 134
14.5 Accessories – Reflectors and reflective tapes 134

15 EC Declaration of Conformity 135

16 Appendix 136
16.1 ASCII character set 136
16.2 Bar code sample 140

1 About this document

Used symbols and signal words

Tab. 1.1: Warning symbols and signal words

	Symbol indicating dangers to persons
	Symbol indicating possible property damage
NOTE	Signal word for property damage Indicates dangers that may result in property damage if the measures for danger avoidance are not followed.
CAUTION	Signal word for minor injuries Indicates dangers that may result in minor injury if the measures for danger avoidance are not followed.
WARNING	Signal word for serious injury Indicates dangers that may result in severe or fatal injury if the measures for danger avoidance are not followed.
DANGER	Signal word for life-threatening danger Indicates dangers with which serious or fatal injury is imminent if the measures for danger avoidance are not followed.

Tab. 1.2: Other symbols

	Symbol for tips Text passages with this symbol provide you with further information.
	Symbol for action steps Text passages with this symbol instruct you to perform actions.
⇨	Symbol for action results Text passages with this symbol describe the result of the preceding action.

Terms and abbreviations

Tab. 1.3: Terms and abbreviations

AutoConfig	Function for easily configuring a code type or number of digits
AutoReflAct	Function for activation without additional sensors (Automatic Reflector Activation)
BCL	Bar code reader
CRT	Code reconstruction technology
EMC	Electromagnetic compatibility
EN	European standard
FE	Functional earth
GSDML	Generic Station Description Markup Language
IO controller	Control that initiates the IO data communication
IO device	Decentral PROFINET fieldbus device
IP address	Network address, which is based on the Internet Protocol (IP)
MAC address	Media Access Control Address; hardware address of a device in the network
PELV	Protective Extra-Low Voltage; protective extra-low voltage with reliable disconnection
PLC	Programmable Logic Controller
SWI1	Digital switching input (Switching Input)
SWO2	Digital switching output (Switching Output)
TCP/IP	Transmission Control Protocol/Internet Protocol; Internet protocol family
UL	Underwriters Laboratories

2 Safety

The bar code readers of the BCL 200i series were developed, manufactured and tested in accordance with the applicable safety standards. They correspond to the state of the art.

2.1 Intended use

Bar code readers of the BCL 200i series are conceived as stationary, high-speed scanners with integrated decoders for all current bar codes used for automatic object detection.

Areas of application

The bar code readers of the BCL 200i series are especially designed for the following areas of application:

- Storage and conveying technologies, in particular for object identification on fast-moving conveyor belts
- Pallet transport systems
- Automobile sector

CAUTION

Observe intended use!

The protection of personnel and the device cannot be guaranteed if the device is operated in a manner not complying with its intended use.

- Only operate the device in accordance with its intended use.
- Leuze electronic GmbH + Co. KG is not liable for damages caused by improper use.
- Read these operating instructions before commissioning the device. Knowledge of the operating instructions is an element of proper use.

NOTICE

Comply with conditions and regulations!

- Observe the locally applicable legal regulations and the rules of the employer's liability insurance association.

2.2 Foreseeable misuse

Any use other than that defined under "Intended use" or which goes beyond that use is considered improper use.

In particular, use of the device is not permitted in the following cases:

- in rooms with explosive atmospheres
- in circuits which are relevant to safety
- for medical purposes

NOTICE

Do not modify or otherwise interfere with the device!

- Do not carry out modifications or otherwise interfere with the device. The device must not be tampered with and must not be changed in any way.
- The device must not be opened. There are no user-serviceable parts inside.
- Repairs must only be performed by Leuze electronic GmbH + Co. KG.

2.3 Competent persons

Connection, mounting, commissioning and adjustment of the device must only be carried out by competent persons.

Prerequisites for competent persons:

- They have a suitable technical education.
- They are familiar with the rules and regulations for occupational safety and safety at work.
- They are familiar with the operating instructions for the device.
- They have been instructed by the responsible person on the mounting and operation of the device.

Certified electricians

Electrical work must be carried out by a certified electrician.

Due to their technical training, knowledge and experience as well as their familiarity with relevant standards and regulations, certified electricians are able to perform work on electrical systems and independently detect possible dangers.

In Germany, certified electricians must fulfill the requirements of accident-prevention regulations DGUV (German Social Accident Insurance) provision 3 (e.g. electrician foreman). In other countries, there are respective regulations that must be observed.

2.4 Disclaimer

Leuze electronic GmbH + Co. KG is not liable in the following cases:

- The device is not being used properly.
- Reasonably foreseeable misuse is not taken into account.
- Mounting and electrical connection are not properly performed.
- Changes (e.g., constructional) are made to the device.

2.5 Laser safety notices

ATTENTION	
	LASER RADIATION – CLASS 1 LASER PRODUCT The device satisfies the requirements of IEC/EN 60825-1:2014 safety regulations for a product of **laser class 1** and complies with 21 CFR 1040.10 except for conformance with IEC 60825-1 Ed. 3., as described in Laser Notice No. 56, dated May 8, 2019. ↳ Observe the applicable statutory and local laser protection regulations. ↳ The device must not be tampered with and must not be changed in any way. There are no user-serviceable parts inside the device. Repairs must only be performed by Leuze electronic GmbH + Co. KG.

CAUTION	
	Laser radiation Opening the device can lead to dangerous exposure to radiation.

3 Fast commissioning

Below you will find a short description for the initial commissioning of the BCL 248i. Detailed explanations for all listed points can be found throughout these operating instructions.

3.1 Mounting

The bar code reader can be mounted in the following ways:

- Mounting with four M4x5 screws on the rear side of the housing.
- Mounting with mounting devices on the fastening groove on one side of the housing.

3.2 Selecting a mounting location

In order to select the right mounting location, several factors must be considered:

- Size, orientation, and position tolerance of the bar codes on the objects to be scanned.
- The reading field of the bar code reader in relation to the bar code module width.
- The resulting minimum and maximum reading distance from the respective reading field with the respective module width (see chapter 13.2 "Reading fields").
- alignment of the bar code reader for avoiding reflections.
- Distance between bar code reader and host system with respect to the interface.
- The correct time for data output. The bar code reader should be positioned in such a way that, taking into consideration the time required for data processing and the conveyor belt speed, there is sufficient time to e.g. initiate sorting operations on the basis of the read data.
- The display elements such as LEDs should be highly visible.
- For configuring and commissioning with the webConfig tool, the HOST interface should be easily accessible.

For further information, see see chapter 5 "Mounting" and see chapter 6 "Electrical connection".

The best read results are obtained if the following prerequisites are fulfilled:

- The reading distance lies in the middle area of the reading field.
- There is no direct sunlight and protect against ambient light effects.
- The bar code labels are of good print quality and have good contrast ratios.
- You are not using high-glossy labels.
- The bar code is moved past with an angle of inclination of ±10° … 15° to vertical.

	NOTICE
!	**Avoid direct reflection of the laser beam!** The beam on the bar code reader is emitted at 105° to the housing base. An angle of incidence of 15° of the laser to the label has already been integrated in the deflecting mirror so that the bar code reader can be installed parallel to the bar code (rear housing wall).

3.3 Electrical connection

The bar code reader is equipped with two connection cables, each with an M12 connector.

- PWR/SWIO: M12 connection for supply voltage and switching input/output, 5-pin, A-coded, cable length 0.9 m (unshielded)
- HOST: M12 connection for Ethernet/PROFINET, 4-pin, D-coded, cable length 0.7 m (shielded)

1 PWR/SWIO, M12 connector, 5-pin, A-coded
2 HOST, M12 socket, 4-pin, D-coded

Fig. 3.1: Electrical connections

NOTICE	
	The shielding is connected using the M12 connector of the Ethernet cable.

Details on the connectors see chapter 6 "Electrical connection".

3.4 Preparatory settings

↳ Connect the +18 … 30 V DC supply voltage (typically +24 V DC).

⇨ The bar code reader starts up.

First, you need to assign its individual device name to the BCL 248i. The PLC must communicate this device name to the participant during the "device naming". Further information may be found below and in see chapter 8.3.5 "Step 5 – Set device name – device naming".

3.4.1 Commissioning the BCL 248i on the PROFINET-IO

↳ Complete the necessary steps for commissioning a Siemens-S7 control as described below.

Further information regarding the individual commissioning steps is provided in see chapter 8.3 "Configuration steps for a Siemens Simatic S7 control".

3.4.2 Prepare the control

↳ In the first step, assign an IP address to the IO controller (S7 PLC) and prepare the control for a consistent data transmission.

NOTICE	
	↳ With the S7 control, make sure that at least Simatic Manager Version 5.4 + Service Pack 5 (V5.4+SP5) is used.

3.4.3 Installing GSD file

For the subsequent configuration of the IO devices, e.g., BCL 248i, the corresponding GSD file must be loaded first. In this file, all data necessary for operating the BCL 248i is described in modules. These are input and output data and device parameters for the functioning of the BCL 248i and the definition of the control and status bits.

↳ Install the GSD file associated with the BCL 248i in the PROFINET-IO Manager of your control.

3.4.4 Configuration

↳ Configure the PROFINET-IO system with the HW Config of the SIMATIC Manager by inserting the BCL 248i into your project.

⇨ Here, an IP address is assigned to a unique "device name".

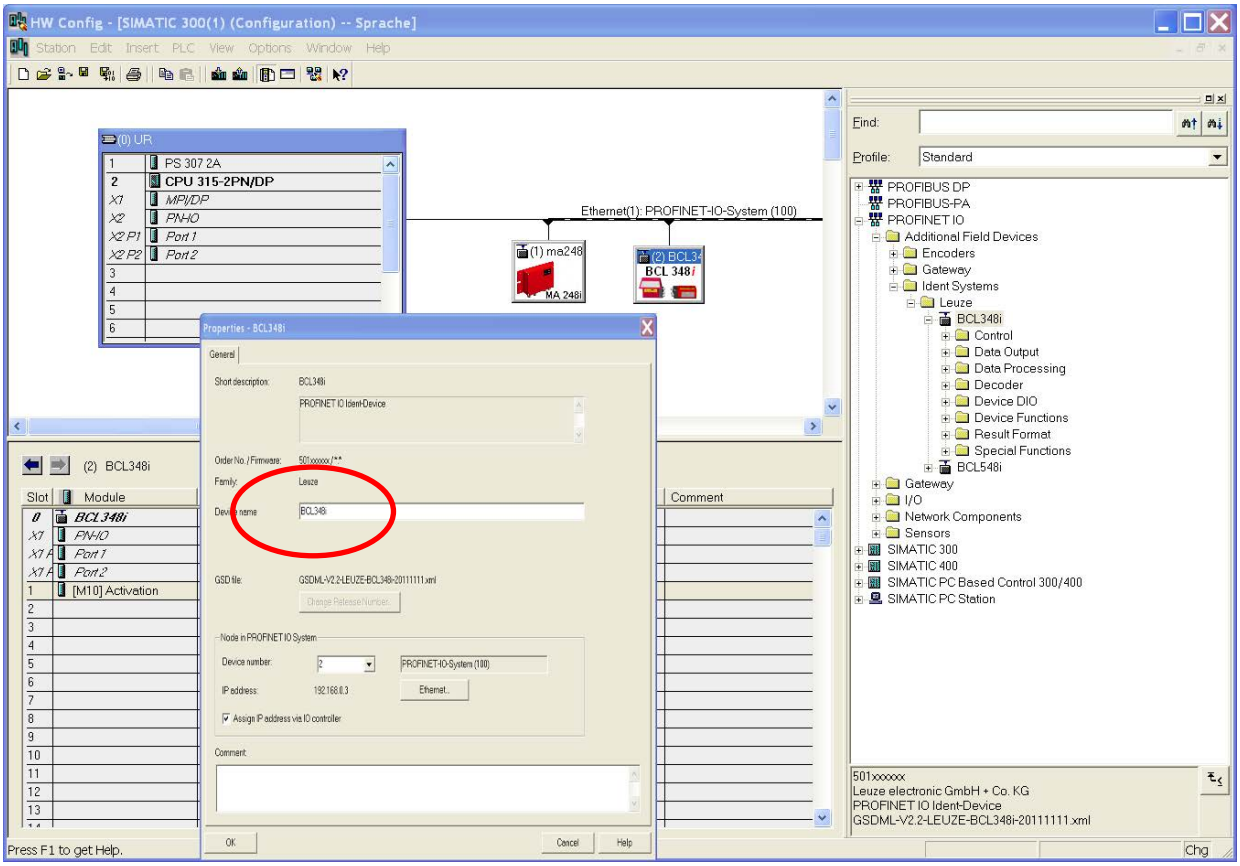

Fig. 3.2: Assignment of the device names to IP addresses

3.4.5 Transmit the configuration to the IO controller

↳ Transmit the PROFINET-IO configuration to the IO controller (S7 PLC).

After correct transmission to the IO controller (S7 PLC), the PLC automatically carries out the following activities:

- Check of device names
- Assignment of the IP addresses that were configured in the HW Config to the IO devices
- Establishment of a connection between the IO Controller and configured IO devices
- Cyclical data exchange

	NOTICE
	Participants that have not been "named" cannot be contacted yet at this point in time.

3.4.6 Setting the device name – device naming

PROFINET-IO defines the "naming of the device" as the creation of a name-based relationship for a PROFINET-IO device.

Assigning the device name to the configured IO devices

↳ Select the respective BCL 248i bar code reader for the "device naming" based on its MAC address.

⇨ This participant is assigned the unique "device name." This must match the device name in the HW config and must not be longer than 255 characters.

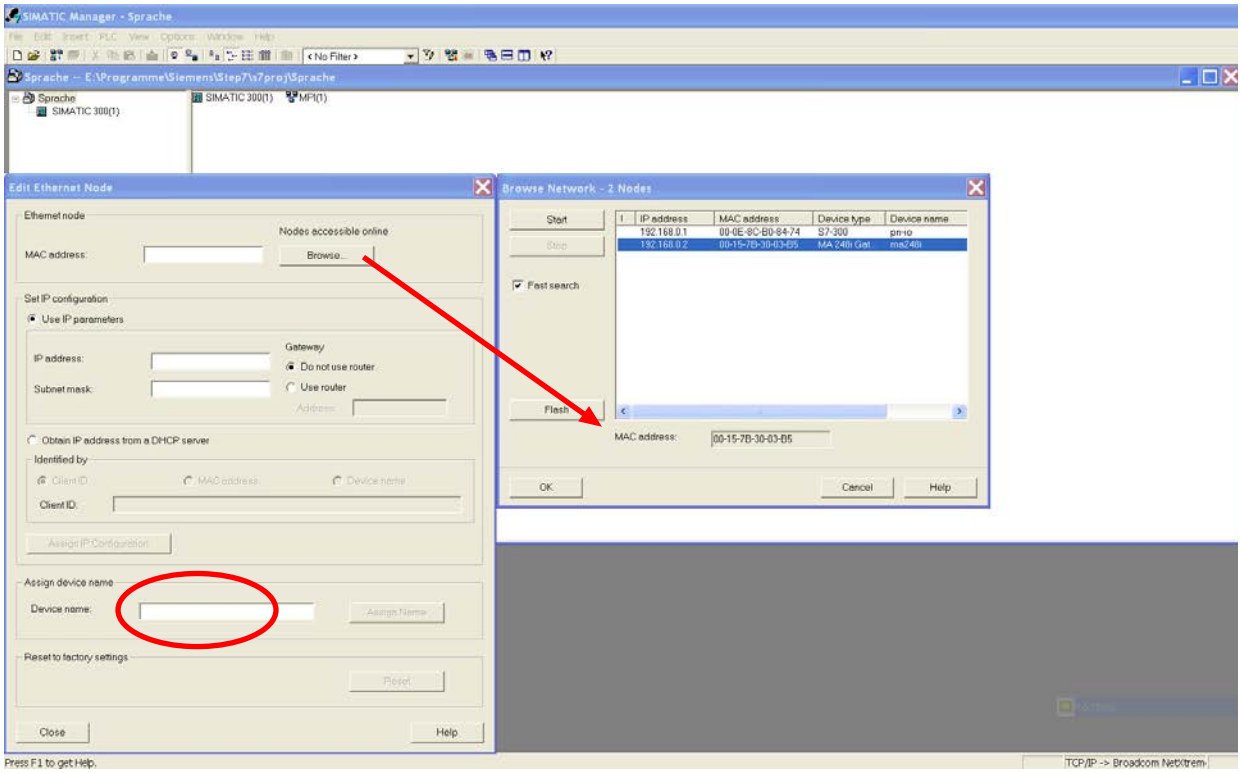

Fig. 3.3: Assigning the device names to the configured IO devices

	NOTICE
	Multiple BCL 248i can be distinguished by the MAC addresses displayed. The MAC address may be found on the name plate of the respective bar code reader.

Assignment of MAC address – IP address – individual device name

↳ Assign an IP address (suggested by the PLC), a subnet mask and, if required, a router address, and assign this data to the named participant ("device name").

⇨ From now on, and when programming, only the unique "device name" is used.

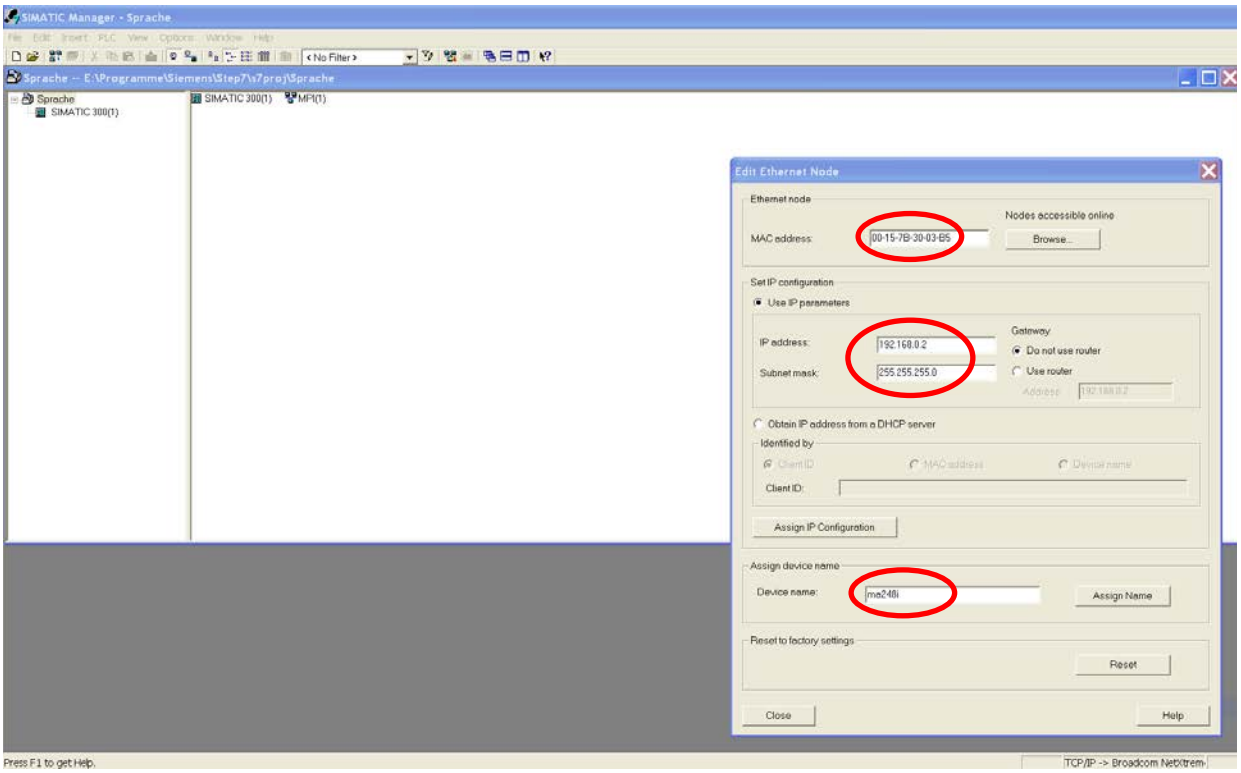

Fig. 3.4: MAC address – IP address – individual device name

3.4.7 Check device name

↳ After completing the configuration phase, recheck the "device names" that have been assigned. Ensure that these are unique and that all participants are located in the same subnet.

3.5 Further settings

Carry out further settings via the PROFINET-IO Controller, such as the control of the decoding and processing of the read data and the configuration of the connected switching inputs and outputs, using the parameters provided by the GSD file.

↳ Activate the desired modules (at least module 10 and one of the modules 21 … 29).

3.6 Starting the device

↳ Connect the +18 … 30 V DC supply voltage (typically +24 V DC).

⇨ The BCL 248i starts up, the PWR, NET and LINK LEDs indicate the operating state.

First, you need to assign its individual device name to the BCL 248i.

Tab. 3.1: Display of operating state

LED	Color	State	Description
PWR	Green	Flashing	Device ok, initialization
		Continuous light	Power On, device OK
		Briefly off - on	Good read, reading successful
	Green - red	Green off – briefly red – green on	No Read, reading not successful
	Yellow	Continuous light	Service mode
	Red	Flashing	Warning
		Continuous light	Error, device error

LED	Color	State	Description
NET	Green	Flashing	Initialization
		Continuous light	Network mode ok
	Orange	Flashing	Topology error
	Red	Flashing	Communication error
		Continuous light	Network error
LINK	Green	Continuous light	Ethernet connected (LINK)
	Yellow	Flashing	Data communication (ACT)

During the initialization phase (power on), the laser is switched on for approx. 2 seconds. A configuration code can be read in during this time.

NOTICE

Setting the IP address to the Leuze default address

By reading in the configuration code during the initialization phase, the IP address and the subnet mask are set to the Leuze default.

IP address: 192.168.60.101

Subnet mask: 255.255.255.0

192.168.060.101

Operating the bar code reader

After connecting a supply voltage of +18 … 30 V DC to the switching input, a read process is activated. In the standard setting, all common code types for decoding are released. Only the 2/5 Interleaved code type is limited to 10 digits of code content.

If a code is moved through the reading field, the code content is decoded and forwarded to the superior system (PLC/PC) via PROFINET-IO.

3.7 Bar code reading

↳ Test the device with the following bar code in format 2/5 Interleaved. The bar code module here is 0.5.

Modul 0,5

6677889900

The PWR LED goes off briefly and then turns green again. Simultaneously, the read information is forwarded to the superior system (PLC/PC) via the PROFINET-IO.

↳ Check the incoming data of the bar code information.

Alternatively, you can use a switching input for read activation (switching signal of a photoelectric sensor or 24 V DC switching signal).

4 Device description

4.1 Device overview

Bar code readers of the BCL 200i series are high-speed scanners with integrated decoder for all commonly used bar codes, e.g. 2/5 Interleaved, Code 39, Code 128, EAN 8/13 etc., as well as codes from the GS1 DataBar family.

Bar code readers of the BCL 200i series are available in various models as line/raster scanners with deflecting mirror.

The interfaces integrated in the various device models offer an optimum connection to the superior host system:

- Ethernet TCP/IP UDP
- Ethernet/IP
- PROFINET IO

4.2 Performance characteristics

- Integrated fieldbus connectivity, Plug-and-Play fieldbus coupling and easy networking
- Numerous interface variants facilitate connection to the superior systems
  - PROFINET IO
  - Ethernet
- Integrated code reconstruction technology (CRT) enables the identification of soiled or damaged bar codes
- Maximum depth of field and reading distances from 40 mm to 255 mm
- Large optical opening angle and, thus, large reading field width
- High scanning rate with 1000 scans/s for fast reading tasks
- Adjustment of all device parameters with a web browser
- Easy alignment and diagnostics functions
- Two freely programmable switching inputs/outputs for the activation or signaling of states
- Automatic monitoring of the read quality with autoControl
- Automatic recognition and setting of the bar code type using autoConfig
- Reference code comparison
- Heavy-duty housing of degree of protection IP 65

	NOTICE
	Information on technical data and characteristics: see chapter 13 "Technical data"

Integrated fieldbus connectivity

The integrated fieldbus connectivity contained in the bar code readers of the BCL 200i series facilitates the use of identification systems which function without connection unit or gateways. The integrated fieldbus interface considerably simplifies handling. The Plug-and-Play concept enables easy networking and very simple commissioning: Directly connect the respective fieldbus and all configuration is performed with no additional software.

CRT decoder

For decoding bar codes, the bar code readers of the BCL 200i series make available the proven CRT decoder with code reconstruction technology.

The proven code reconstruction technology (CRT) enables bar code readers of the BCL 200i series to read bar codes with a small bar height, as well as bar codes with a damaged or soiled print image.

With the aid of the CRT decoder, bar codes can also be read without problem in other demanding situations, such as with a large tilt angle (azimuth angle or even angle of rotation).

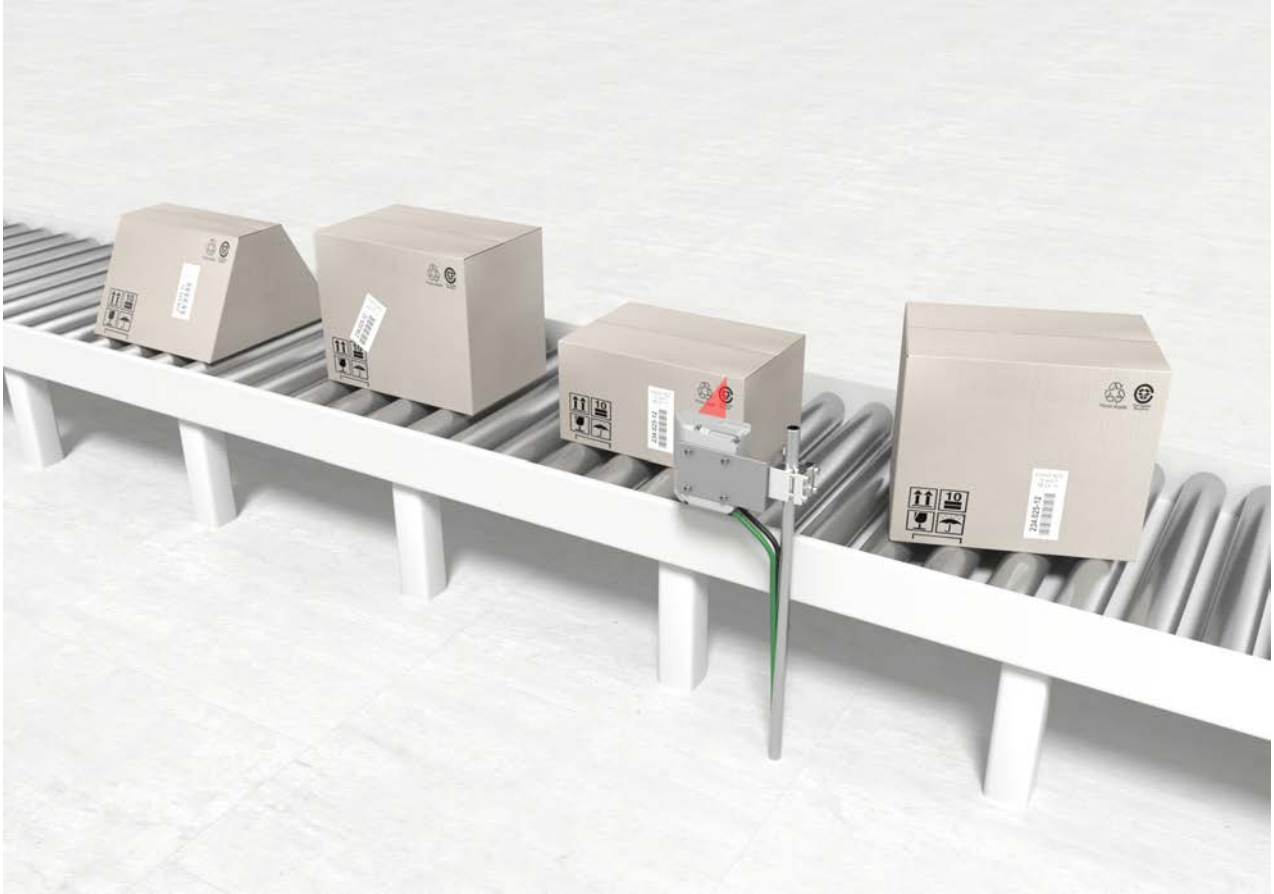

Fig. 4.1: Possible bar code orientation

Configuration

With the BCL 248i, configuration is generally performed with the aid of the GSD file.

The bar code reader needs a suitable activation to start a read process as soon as an object is in the reading field. This opens a time window ("reading gate") in the bar code reader for the read process during which the bar code reader has time to detect and decode a bar code.

In the basic setting, triggering takes place through an external reading cycle signal or via PROFINET IO. An alternative option for activation is the autoReflAct function.

Through the read operation, the bar code reader collects additional useful pieces of data for diagnostics which can also be transmitted to the host. The quality of the read operation can be inspected using the alignment mode which is integrated in the webConfig tool.

4.3 Device construction

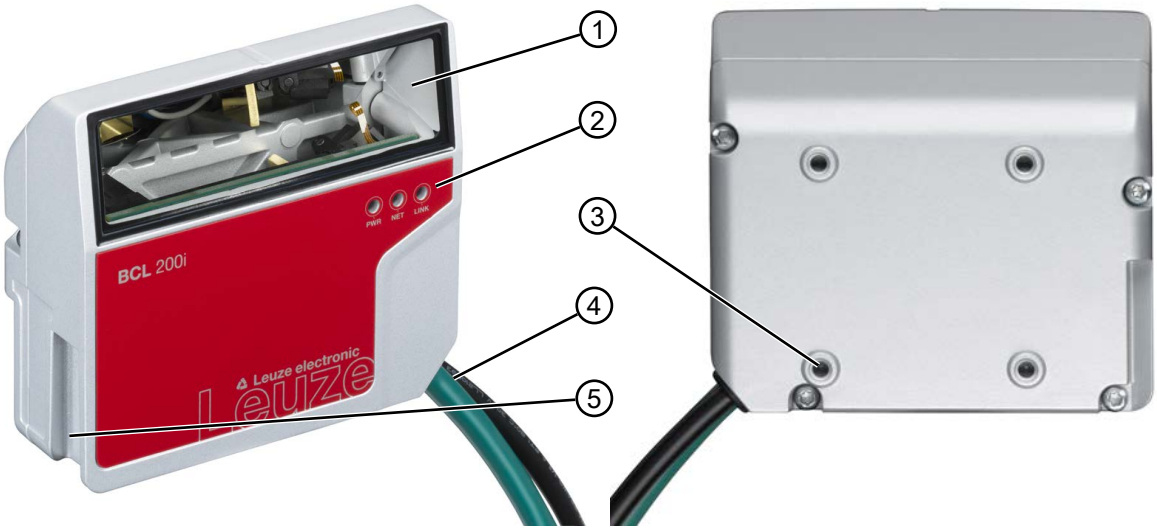

1 Reading window
2 Indicator LEDs
3 4 mounting threads on the rear of the device
4 Connection cable
5 Dovetail mounting

Fig. 4.2: Device construction BCL 200i – Line scanner with deflecting mirror

4.4 Display elements

Located on the front side of the housing are three multicolor indicator LEDs: PWR, NET, LINK.

Fig. 4.3: LED indicators

PWR LED

Tab. 4.1: PWR indicators

Color	State	Description
---	OFF	Device off No supply voltage
Green	Flashing	Device ok • Initialization phase • Bar code reading not possible • Supply voltage applied • Self test running
	Continuous light	Device ok • Bar code reading possible • Self test successfully finished • Device monitoring active
	Briefly off - on	Good Read • Bar code reading successful
	Green briefly off – briefly red – green on	No read • Bar code reading not successful
Orange	Continuous light	Service mode • Bar code reading possible • No data on the host interface
Red	Flashing	Device ok, warning set • Bar code reading possible • Temporary operating fault
	Continuous light	Device error/parameter enable • Bar code reading not possible

NET LED

Tab. 4.2: NET indicators

Color	State	Description
---	OFF	No supply voltage • No communication possible • PROFINET-IO communication not initialized or inactive
Green	Flashing	Initialization of the device Establishing communication
	Continuous light	Operation ok • Network mode ok • Connection and communication to IO Controller (PLC) established ("data exchange")
Orange	Flashing	Topology error • Deviating target/actual topology detected
Red	Flashing	Communication error • Parameterization or configuration failed ("parameter failure") • IO error • No data exchange
	Continuous light	Network error • No connection established • No communication possible

LINK LED

Tab. 4.3: LINK indicators

Color	State	Description
Green	Continuous light	Ethernet connected (LINK)
Yellow	Flashing	Data communication (ACT)

4.5 Reading techniques

4.5.1 Line scanner (single line)

The scan line scans the label. Due to the optical opening angle, the reading field width is dependent on the read distance. Through the movement of the object, the entire bar code is automatically transported through the scan line.

The integrated code reconstruction technology permits twisting of the bar code (tilt angle) within certain limits. These are dependent on the transport speed, the scanning rate of the scanner and the bar code properties.

Areas of application of the line scanner

- With the bars of the bar code arranged lengthwise with respect to the conveying direction ("ladder arrangement")
- With bar codes having very short bar lengths
- When the ladder code is turned out of the vertical position (tilt angle)

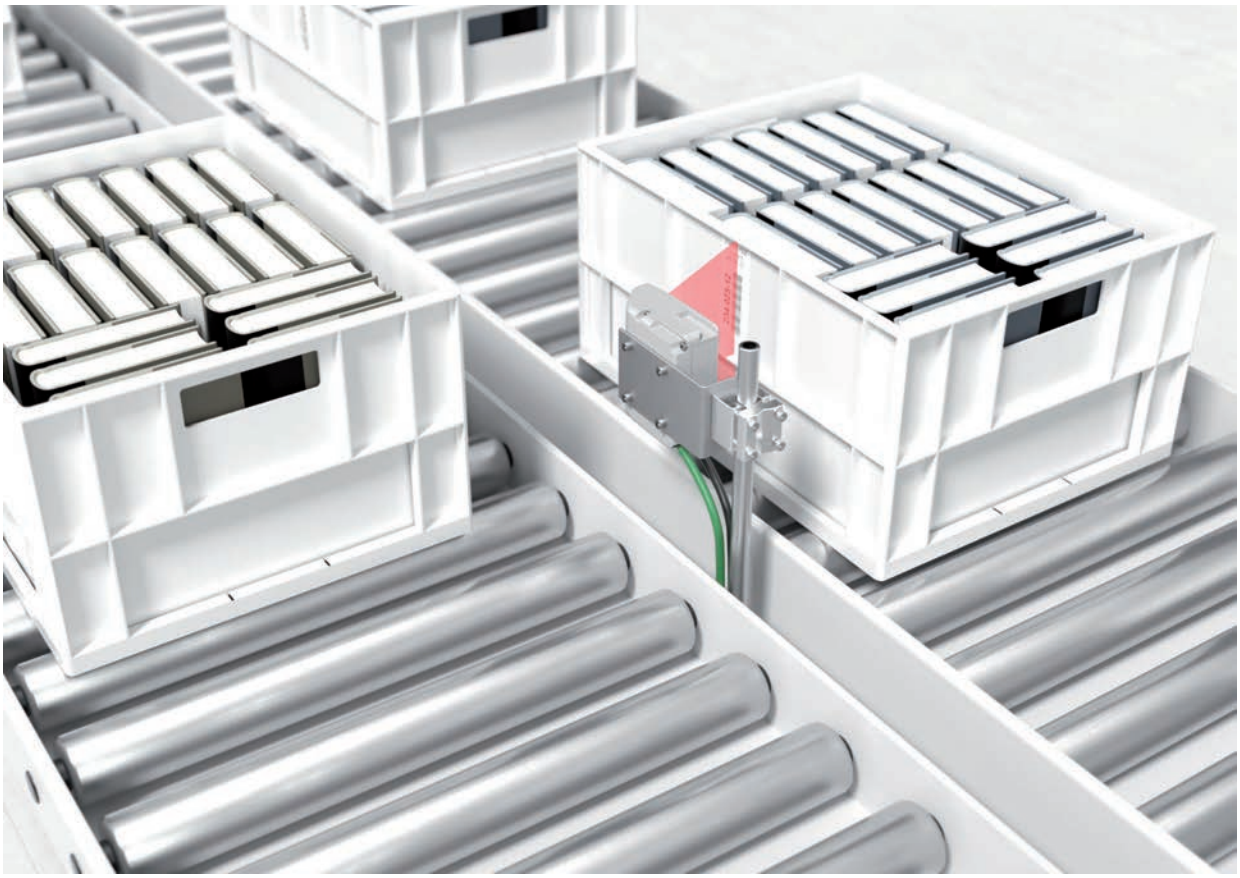

Fig. 4.4: Deflection principle for the line scanner

4.5.2 Raster scanner (raster line)

Multiple scan lines scan the label. Due to the optical opening angle, the reading field width is dependent on the read distance. Provided the code is located in the reading field, it can be read during standstill. If the code moves through the reading field, it is scanned by multiple scan lines.

The integrated code reconstruction technology permits twisting of the bar code (tilt angle) within certain limits. These are dependent on the transport speed, the scanning rate of the scanner and the bar code properties. In most cases, everywhere a line scanner is used, a raster scanner can be used.

Areas of application of the raster scanner

- With the bars of the bar code arranged perpendicular with respect to the conveying direction ("picket fence arrangement")
- With bar codes with low height displacement
- With very glossy bar codes

	NOTICE
	There may not be two or more bar codes in the raster detection range simultaneously.

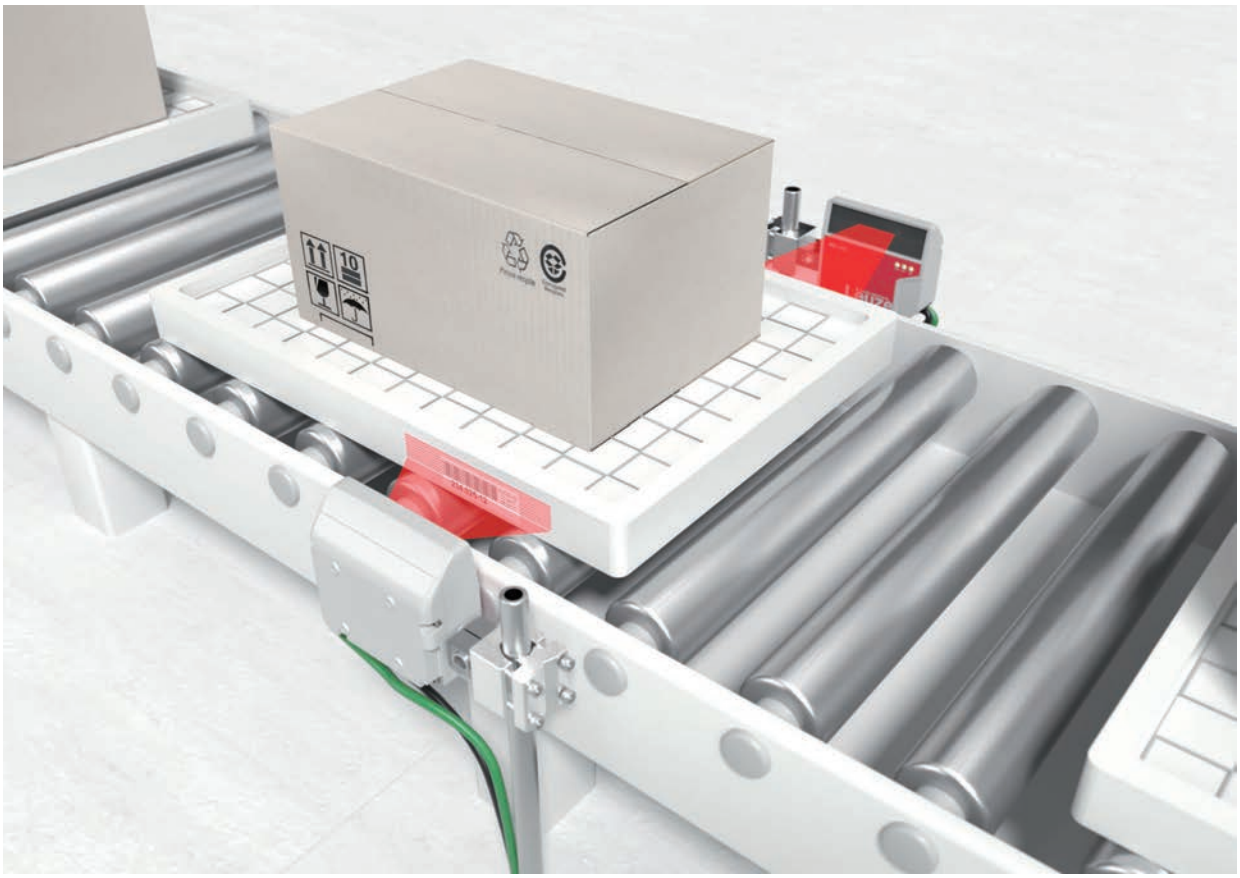

Fig. 4.5: Deflection principle for the raster scanner

4.6 Fieldbus systems

Various product variants of the BCL 200i series are available for connecting to different fieldbus systems such as PROFINET, Ethernet, and EtherNet/IP.

4.6.1 PROFINET-IO

Performance characteristics of the PROFINET-IO interface

- GSDML file for the device description
- Certified as a PROFINET-IO device according to V2.34
- PROFINET-IO with real-time (RT) communication
- Standard Fast Ethernet (100 Mbit/s) connections (M12 technology)
- Auto-crossover and auto-negotiation
- Cyclical data exchange
- 4-pin, M12 connectors with D-coding are used for the electrical connection
- Identification & maintenance function (I&M) IM0 - IM4
- The IP address – or name assignment – is set using, e.g., TIA portal or comparable tools
- Cycle time: maximum 2 ms (MinDeviceInterval=64)
- Function range acc. to Conformance Class B
- Network load class I

The functionality of the device is defined via parameter sets which are clustered in modules. These modules are contained in a GSDML file.

On delivery, each BCL 248i comes with a unique MAC-ID. This information is used to assign a unique, plant-specific device name ("NameOfStation") to the device via the "Discovery and Configuration Protocol" (DCP).

When configuring a PROFINET-IO system, the assignment of the device names to the configured IO devices creates a name-based relationship for the participating IO devices ("device naming"). Further information see chapter 8.3.5 "Step 5 – Set device name – device naming".

Identification & Maintenance functions

The BCL 248i supports the base record I&M0:

Tab. 4.4: Base record I&M0

Index	Contents	Data type	Description	Value
0	Header	10 bytes	Manufacturer specific	
10	MANUFACTURER_ID	UNSIGNED16	Leuze manufacturer ID (Leuze PNO manufacturer ID)	338
12	ORDER_ID	ASCII string 20 bytes	Leuze order no.	
32	SERIAL_NUMBER	ASCII string 16 bytes	Unique device serial number	Device-dependent
48	HARDWARE_REVISION	UNSIGNED16	Hardware revision number, e.g., 0 … 65535	Device-dependent
50	SOFTWARE_REVISION	1x CHAR, 3x UNSIGNED8	Software version number, e.g., V130 corresponds to V1.3.0	Device-dependent
54	REVISION_COUNTER	UNSIGNED16	Is incremented when updating individual modules. This function is not supported.	0
56	PROFILE_ID	UNSIGNED16	PROFIBUS application profile number	0x0000 (Non Profile)
58	PROFILE_SPECIFIC_TYPE	UNSIGNED16	Information about subchannels and submodules, not relevant	0x0003 (I/O Module)
60	IM_VERSION	2x UNSIGNED8	Implemented I&M version V1.1	0x01, 0x01
62	IM_SUPPORTED	Bit[16]	Optional I&M records available	0

The BCL 248i supports further protocols and services for communication:

- TCP/IP (Client / Server)
- UDP
- DCP
- ARP
- PING

Further information on commissioning: see chapter 7 "Starting up the device – Leuze webConfig tool"

4.6.2 PROFINET-IO – star topology

The BCL 248i can be operated as a single device (stand-alone) with an individual device name in a star topology. The PLC must communicate this device name to the participant during the "device naming".

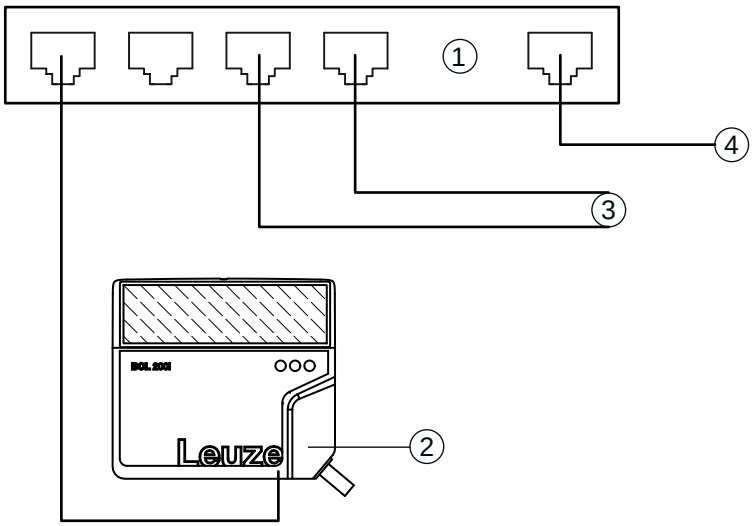

1	Ethernet switch
2	Bar code reader of the BCL 200i series
3	Other network participants
4	Host interface - PC/control

Fig. 4.6: PROFINET-IO in a star topology

4.7 autoReflAct

autoReflAct stands for **auto**matic **Refl**ector **Act**ivation and permits an activation without additional sensors. This is achieved by directing the scanner with reduced scanning beam towards a reflector mounted behind the conveyor path.

	NOTICE
	Suitable reflectors are available, see chapter 14.5 "Accessories – Reflectors and reflective tapes".

As long as the scanner is targeted at the reflector, the reading gate remains closed. If, however, the reflector is blocked by an object such as a container with a bar code label, the scanner activates the read procedure, and the label on the container is read. When the path from the scanner to the reflector has cleared, the read procedure has completed and the scanning beam is reduced and again directed onto the reflector. The reading gate is closed.

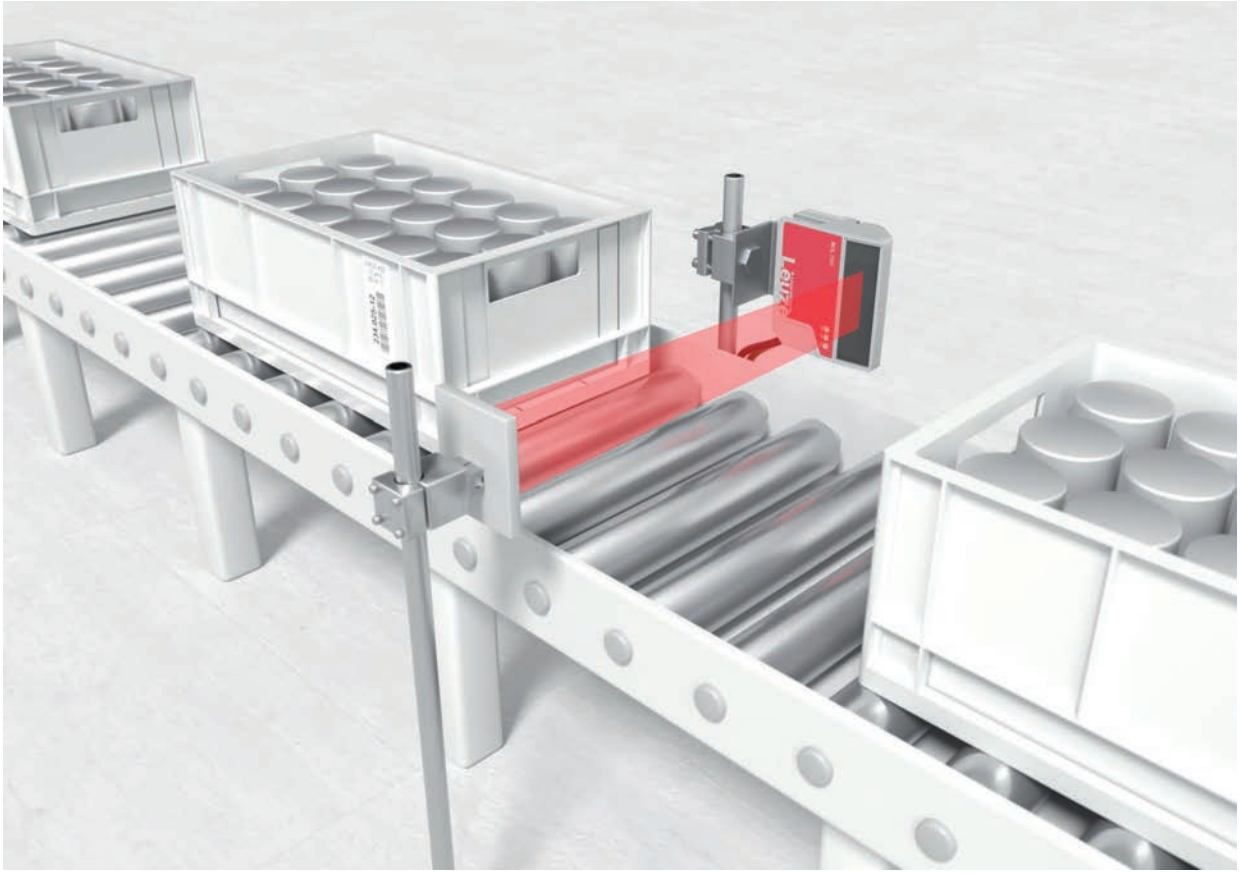

Fig. 4.7: Reflector arrangement for autoReflAct

The autoReflAct function uses the scanning beam to simulate a photoelectric sensor and thus permits an activation without additional sensors.

4.8 Reference codes

The bar code reader offers the possibility of storing one or two reference codes.

It is possible to store the reference codes via the webConfig tool, via online commands or via PROFINET-IO.

The bar code reader can compare read bar codes with one and/or both reference codes and execute user-configurable functions depending on the comparison result.

4.9 autoConfig

With the autoConfig function, the bar code reader offers an extremely simple and convenient configuration option to users who only want to read one code type (symbology) with one number of digits at a time.

After starting the autoConfig function via the switching input or from a superior control, it is sufficient to position a bar code label with the desired code type and number of digits in the reading field of the bar code reader.

Afterward, bar codes with the same code type and number of digits are recognized and decoded.

	NOTICE
	The settings made via the webConfig configuration tool only temporarily push the parameters set in the PROFINET-IO into the background. The settings are overwritten during integration into the PROFINET-IO or after deactivation of service mode of the PROFINET master with those settings made via the GSD file. Device settings for operating the BCL 248i on the PROFINET-IO are managed and configured exclusively by the PROFINET-IO controller (PLC). ↳ Make permanent changes in the PROFINET-IO controller.

For further information, see chapter 8 "Starting up the device - Configuration".

5 Mounting

5.1 Transport and storage

NOTICE
↳ Package the device for transport and storage in such a way that is protected against shock and humidity. Optimum protection is achieved when using the original packaging. ↳ Ensure compliance with the approved environmental conditions listed in the specifications.

Unpacking

↳ Check the packaging content for any damage. If damage is found, notify the post office or shipping agent as well as the supplier.

↳ Check the delivery contents using your order and the delivery papers:

- Delivered quantity
- Device type and model as indicated on the nameplate
- Package insert

The name plate on the bottom of the device provides information as to what BCL type your device is, see chapter 13 "Technical data".

↳ Save the original packaging for later storage or shipping.

↳ If you have questions, please contact your supplier or Leuze customer service, see chapter 12 "Service and support".

↳ Observe the applicable local regulations when disposing of the packaging materials.

5.2 Mounting

The bar code reader can be mounted in the following ways:

- Mounting with four M4x5 screws on the rear side of the housing.
- Mounting with mounting devices on the fastening groove on one side of the housing.

NOTICE
↳ When mounting, ensure that the scanning beam is not reflected directly back to the scanner by the label which is being read. For further information, see the notes in see chapter 5.3 "Selecting a mounting location". ↳ Please refer to see chapter 13.2 "Reading fields" for the permissible minimum and maximum distances between the bar code reader and the labels to be read.

5.2.1 Mounting with M4 fastening screws

↳ Mount the device on the system with M4 fastening screws (not included in delivery contents).

⇨ Max. tightening torque of the fastening screws: 2.5 Nm

⇨ Location and thread depth of the mounting thread: see chapter 13.3 "Dimensioned drawings"

5.2.2 Mounting with BT 56 or BT 56-1 mounting device

Mounting with the mounting device is intended for rod mounting.

Order guide: see chapter 14.4 "Accessories – mounting systems"

- ↳ Mount the mounting device on the rod with the clamp profile (system-side).
- ↳ Mount the device on the mounting device using the fastening grooves.
  - ⇨ Max. tightening torque of the fastening screws: 1.4 Nm

5.2.3 Mounting with BT 300-1 mounting device

Mounting with the mounting device is intended for rod mounting (10 – 16 mm).

Order guide: see chapter 14.4 "Accessories – mounting systems"

- ↳ Mount the mounting device on the rod with the clamp profile (system-side).
- ↳ Mount the device on the mounting device (included with delivery) using the fastening screws.
  - ⇨ Max. tightening torque of the fastening screws: 2.5 Nm

5.2.4 Mounting with the BT 300 W mounting bracket

Mounting with the BT 300 W mounting bracket is intended for wall mounting.

Order guide: see chapter 14.4 "Accessories – mounting systems"

- ↳ Mount the mounting bracket on the system side with M4 fastening screws (not included in delivery contents).
- ↳ Mount the device to the mounting bracket (included in delivery) with M4 fastening screws.
  - ⇨ Max. tightening torque of the fastening screws: 2.5 Nm

5.3 Selecting a mounting location

	NOTICE
	The size of the bar code module influences the maximum reading distance and the width of the reading field. ↳ When selecting a mounting location and/or the bar code label, take into account the different reading characteristics of the bar code reader with various bar code modules.

	NOTICE
	Observe when choosing the mounting location! ↳ Maintain the permissible environmental conditions (humidity, temperature). ↳ Avoid possible soiling of the reading window due to liquids, abrasion by boxes, or packaging material residues. ↳ Ensure that there is the lowest possible chance of damage to the bar code reader by mechanical collision or jammed parts. ↳ Avoid possible ambient light influence (no direct sunlight).

In order to select the right mounting location, several factors must be considered:

- Size, orientation, and position tolerance of the bar codes on the objects to be scanned.
- The reading field of the bar code reader in relation to the bar code module width.
- The resulting minimum and maximum reading distance from the respective reading field with the respective module width (see chapter 13.2 "Reading fields").
- alignment of the bar code reader for avoiding reflections.
- Distance between bar code reader and host system with respect to the interface.
- The correct time for data output. The bar code reader should be positioned in such a way that, taking into consideration the time required for data processing and the conveyor belt speed, there is sufficient time to e.g. initiate sorting operations on the basis of the read data.
- The display elements such as LEDs should be highly visible.
- For configuring and commissioning with the webConfig tool, the HOST interface should be easily accessible.

The best read results are obtained if the following prerequisites are fulfilled:

- The reading distance lies in the middle area of the reading field.
- There is no direct sunlight and protect against ambient light effects.
- The bar code labels are of good print quality and have good contrast ratios.
- You are not using high-glossy labels.
- The bar code is moved past with an angle of inclination of ±10° … 15° to vertical.

	NOTICE
	Avoid direct reflection of the laser beam! The beam on the bar code reader is emitted at 105° to the housing base. An angle of incidence of 15° of the laser to the label has already been integrated in the deflecting mirror so that the bar code reader can be installed parallel to the bar code (rear housing wall).

↳ Mount the bar code reader with deflecting mirror parallel to the bar code.

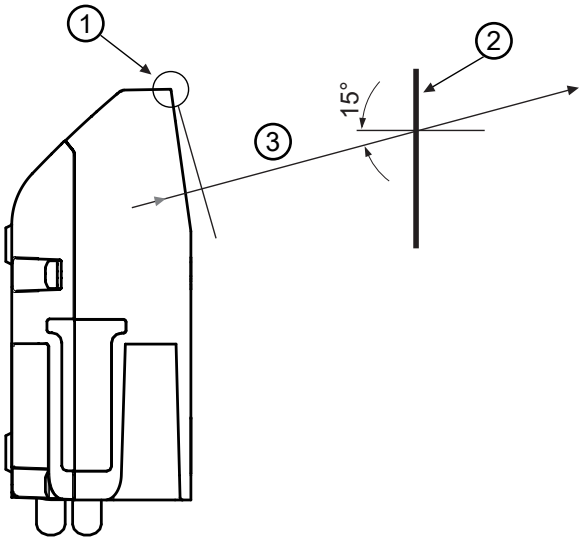

1 Zero position
2 Bar code
3 Distance acc. to reading field curves

Fig. 5.1: Total reflection – line scanner

Reading angle between bar code reader and bar code

The optimum alignment of the bar code reader is accomplished when the scan line scans the bar code bars almost at a right angle (90°). All reading angles that are possible between the scan line and bar code must be taken account.

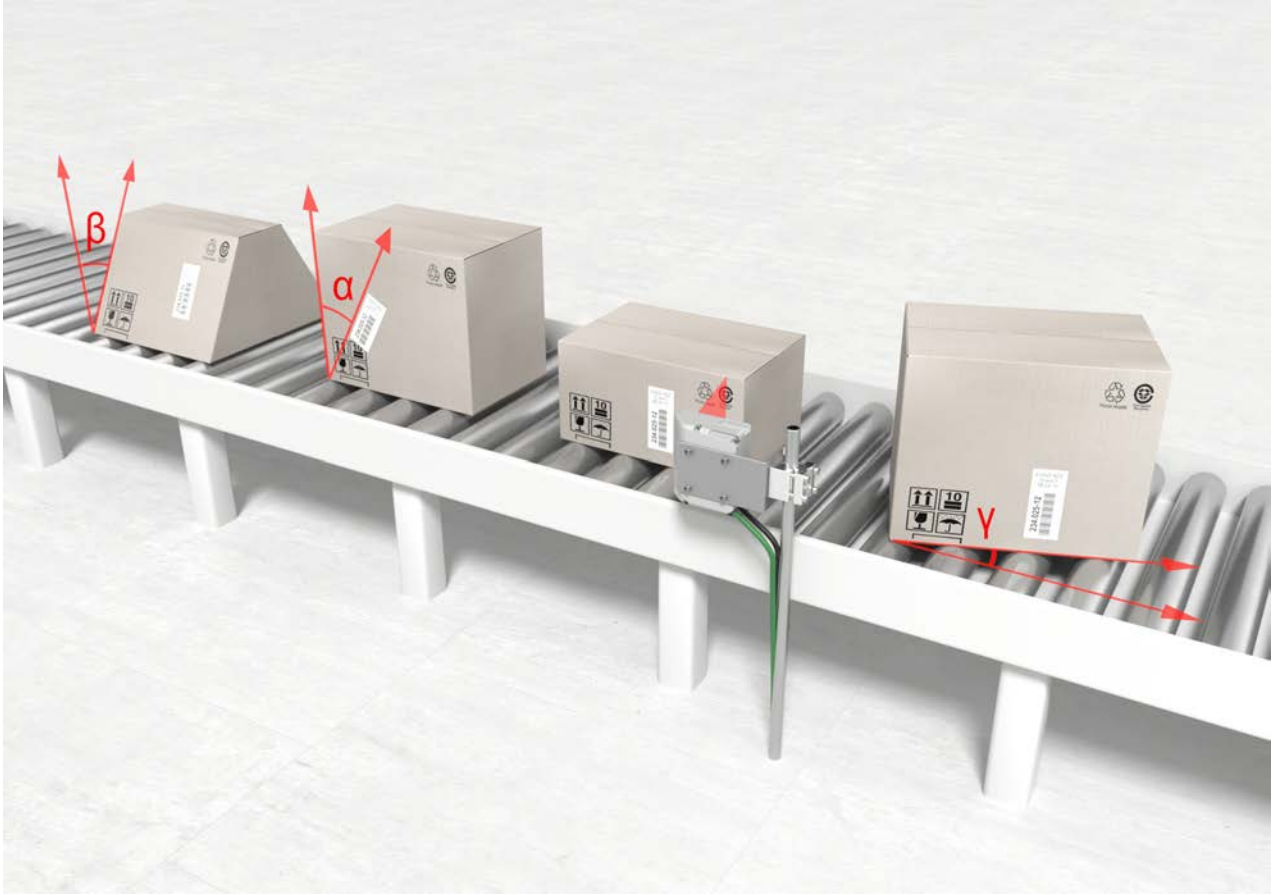

α	Azimuth angle (tilt)
β	Angle of inclination (Pitch)
γ	Angle of rotation (skew)

Fig. 5.2: Reading angle for the line scanner

In order to avoid total reflection, the γ angle of rotation (skew) should be greater than 10°.

5.4 Cleaning

- Clean the glass window of the bar code reader with a soft cloth after mounting.
- Remove all packaging remains, e.g. carton fibers or Styrofoam balls.
- In doing so, avoid leaving fingerprints on the front screen of the bar code reader.

	NOTICE
!	**Do not use aggressive cleaning agents!** Do not use aggressive cleaning agents such as thinner or acetone for cleaning the device.

6 Electrical connection

CAUTION

Safety notices!

- The bar code reader is completely sealed and must not be opened.
- Do not try to open the device under any circumstances, as this avoids both degree of protection IP65 and the warranty.
- Before connecting the device, be sure that the supply voltage agrees with the value printed on the name plate.
- Connection of the device and maintenance work while under voltage must only be carried out by a qualified electrician.
- Ensure that the functional earth (FE) is connected correctly. Unimpaired operation is only guaranteed when the functional earth is connected properly.
- If faults cannot be rectified, take the device out of operation and protect it from accidentally being started.

CAUTION

UL applications!

For UL applications, use is only permitted in Class 2 circuits in accordance with the NEC (National Electric Code).

NOTICE

Protective Extra Low Voltage (PELV)!

The device is designed in accordance with protection class III for supply with PELV (Protective Extra-Low Voltage).

NOTICE

Degree of protection IP65

Degree of protection IP65 is achieved only if the connectors are screwed into place and caps installed.

The bar code reader is equipped with two connection cables, each with an M12 connector.

- PWR/SWIO: M12 connection for supply voltage and switching input/output, 5-pin, A-coded, cable length 0.9 m (unshielded)
- HOST: M12 connection for Ethernet/PROFINET, 4-pin, D-coded, cable length 0.7 m (shielded)

1 PWR/SWIO, M12 connector, 5-pin, A-coded
2 HOST, M12 socket, 4-pin, D-coded

Fig. 6.1: Electrical connections

6.1 PWR/SWIO (supply voltage, switching input and switching output)

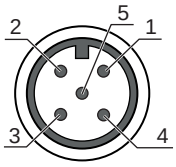

Fig. 6.2: M12 connector, 5-pin, A-coded

Tab. 6.1: PWR/SWIO pin assignment

Pin	Designation	Assignment
1	VIN	Positive supply voltage +18 … +30 V DC
2	SWI1	Configurable switching input 1
3	GNDIN	Negative supply voltage 0 V DC
4	SWO2	Configurable switching output 2
5	FE	Functional earth

Supply voltage

CAUTION

UL applications!

For UL applications, use is only permitted in Class 2 circuits in accordance with the NEC (National Electric Code).

NOTICE

Protective Extra Low Voltage (PELV)!

The device is designed in accordance with protection class III for supply with PELV (Protective Extra-Low Voltage).

NOTICE
Connections of the functional earth FE Ensure that the functional earth (FE) is connected correctly. Unimpaired operation is only guaranteed when the functional earth is connected properly. All electrical disturbances (EMC couplings) are discharged via the functional earth connection.

Switching input / switching output

The bar code readers of the BCL 200i series are equipped with

- 1 fixed, programmable, opto-decoupled switching input SWI1
- 1 fixed, programmable, opto-decoupled switching output SWO2

The switching input can be used to activate various internal functions of the bar code reader (decoding, autoConfig, …). The switching output can be used to signal the state of the bar code reader and to implement external functions independent of the superior control.

The switching input/output is configured as follows by default:

- SWI1: Switching input reading gate start/stop (default)
- SWO2: GOOD READ switching output (default)

NOTICE
You can configure the respective function with the help of the webConfig tool.

The external wiring as switching input and switching output is described in the following. The respective function assignment to the switching inputs/outputs can be found in see chapter 8 "Starting up the device - Configuration".

Function as switching input

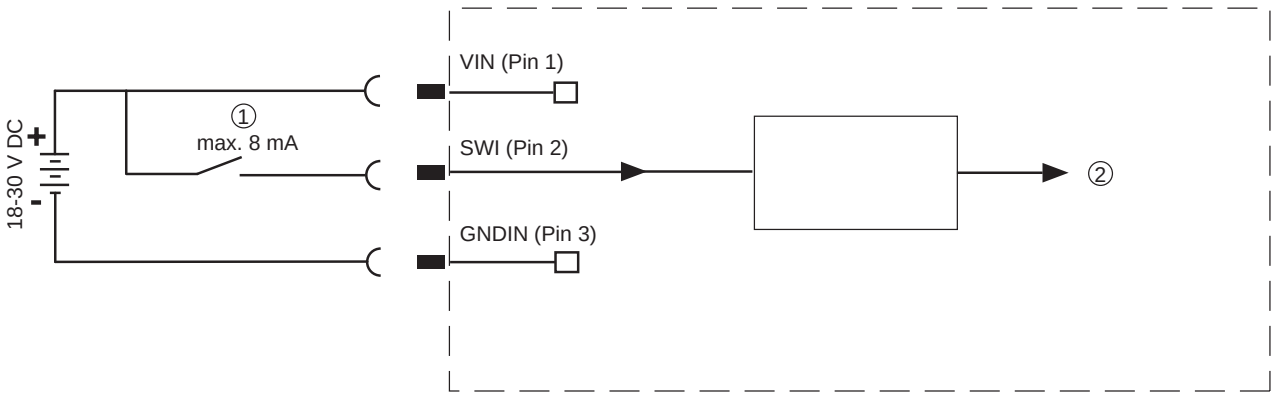

1 Switching input
2 Switching input to controller

Fig. 6.3: Connection diagram for switching input SWI1

NOTICE
The maximum input current must not exceed 8 mA.

Function as switching output

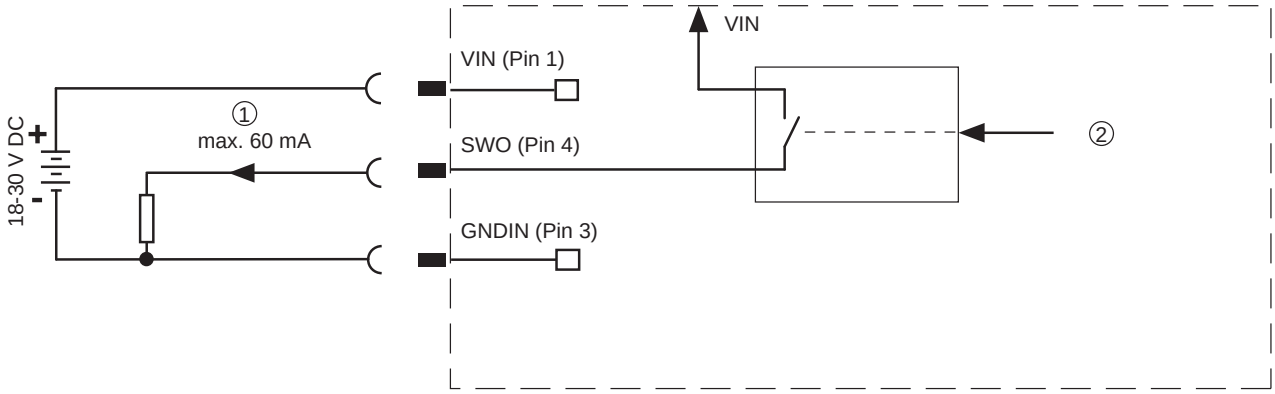

1 Switching output
2 Switching output from controller

Fig. 6.4: Connection diagram for switching output SWO2

NOTICE	
	Each configured switching output is short-circuit proof! Do not load the respective switching output of the bar code reader with more than 60 mA at +18 … +30 V DC in normal operation.

6.2 HOST (PROFINET, cable assignments)

The BCL 248i makes the PROFINET-IO interface available as host interface.

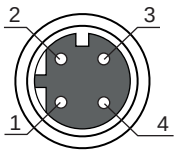

Fig. 6.5: M12 socket, 4-pin, D-coded

Tab. 6.2: HOST pin assignment

Pin	Designation	Assignment
1	TDO+	Transmit Data +
2	RDO+	Receive Data +
3	TDO-	Transmit Data -
4	RDO-	Receive Data -
Thread	FE	Functional earth (housing)

PROFINET-IO cable assignments

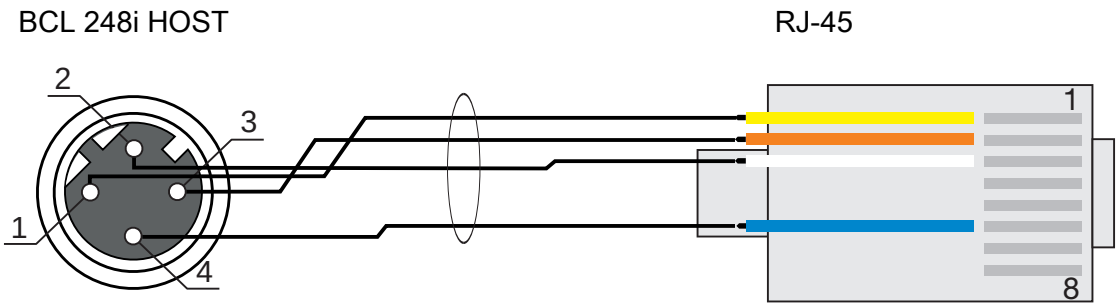

Fig. 6.6: HOST to RJ-45 cable assignments

6.3 PROFINET-IO topologies

The BCL 248i can be operated as a single device (stand-alone) with individual device name in a PROFINET-IO star topology. The PLC must communicate this device name to the participant during the "device naming" (see chapter 8.3.5 "Step 5 – Set device name – device naming").

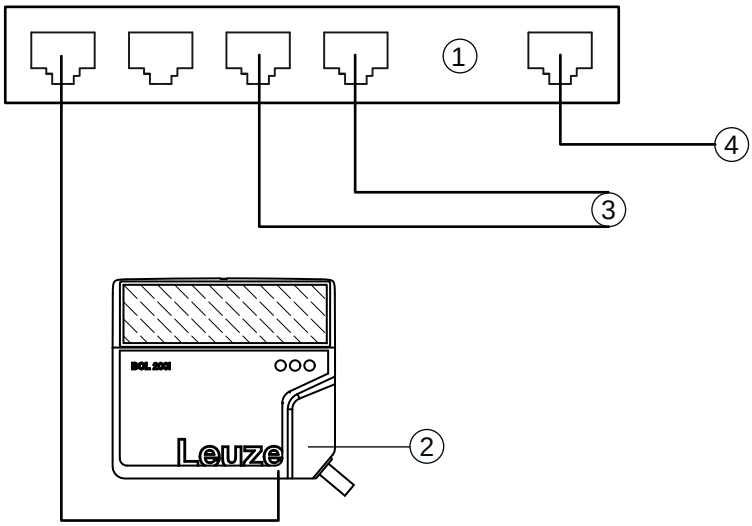

1 Ethernet switch
2 Bar code reader of the BCL 200i series
3 Other network participants
4 Host interface - PC/control

Fig. 6.7: PROFINET-IO in a star topology

PROFINET-IO wiring

A Cat. 5 Ethernet cable should be used for wiring.

6.4 Cable lengths and shielding

↳ Observe the maximum cable lengths and shielding:

Tab. 6.3: Cable lengths and shielding

Connection	Interface	Max. cable length	Shielding
BCL – host	PROFINET-IO RT	100 m	Required
BCL – power supply unit		30 m	Not necessary
Switching input		10 m	Not necessary
Switching output		10 m	Not necessary

7 Starting up the device – Leuze webConfig tool

With the webConfig tool, an operating-system independent, web-technology based, graphical user interface is available for configuring bar code readers of the BCL 200i series.

The webConfig tool can be run on any Internet-ready PC. The webConfig tool uses HTTP as communication protocol and the client-side restriction to standard technologies (HTML, JavaScript and AJAX) that are supported by modern browsers.

	NOTICE
	The webConfig tool is offered in the following languages: German, English, French, Italian and Spanish

7.1 System requirements

	NOTICE
	↳ Regularly update the operating system and the Internet browser. ↳ Install the current Windows Service Packs.

Tab. 7.1: System requirements for the webConfig tool

Monitor	Min. resolution: 1280 x 800 pixels or higher
Internet browser	Recommended is a current version of: Mozilla Firefox Google Chrome Microsoft Edge

	NOTICE
	Other Internet browsers are possible but have not been tested with the current device firmware.

7.2 Start webConfig tool

↳ Start the webConfig tool via your PC's Internet browser with IP address **192.168.60.101** or with the IP address set by you.

⇨ **192.168.60.101** is the standard Leuze IP address for communication with bar code readers of the BCL 200i series.

The following start page appears on your PC:

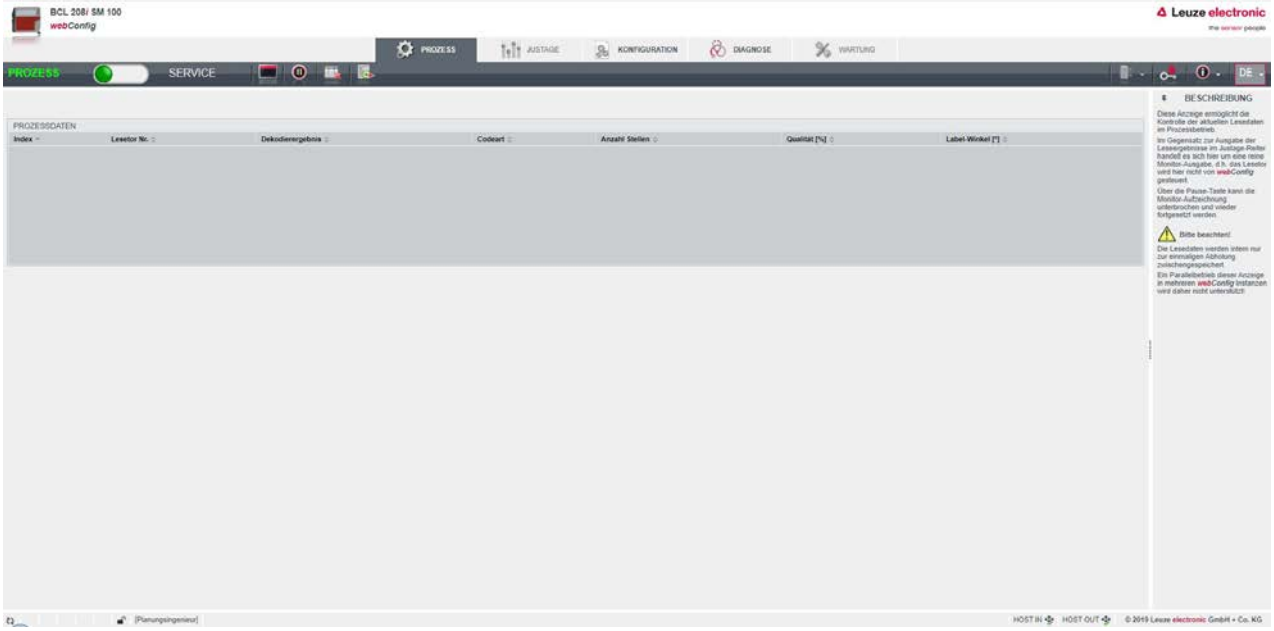

Fig. 7.1: webConfig tool – start page

The user interface of the webConfig tool is largely self-explanatory.

	NOTICE
	The webConfig tool is completely contained in the firmware of the device. The pages and functions of the webConfig tool may appear and be displayed differently depending on the firmware version.

7.3 Short description of the webConfig tool

The webConfig tool has five main menus:

- PROCESS
  - Information on the current result
- ALIGNMENT
  - Alignment of the bar code reader
  - Manually starting of read processes. The results of the read processes are displayed immediately. As a result, this menu item can be used to determine the optimum installation location.
- CONFIGURATION
  - Configuring decoding
  - Configuring data formatting and data output
  - Configuring the switching inputs/outputs
  - Configuring communication parameters and interfaces
- DIAGNOSIS
  - Event logging of warnings and errors
- MAINTENANCE
  - Update firmware

7.3.1 CONFIGURATION menu

The adjustable parameters of the bar code reader are clustered in modules in the CONFIGURATION menu.

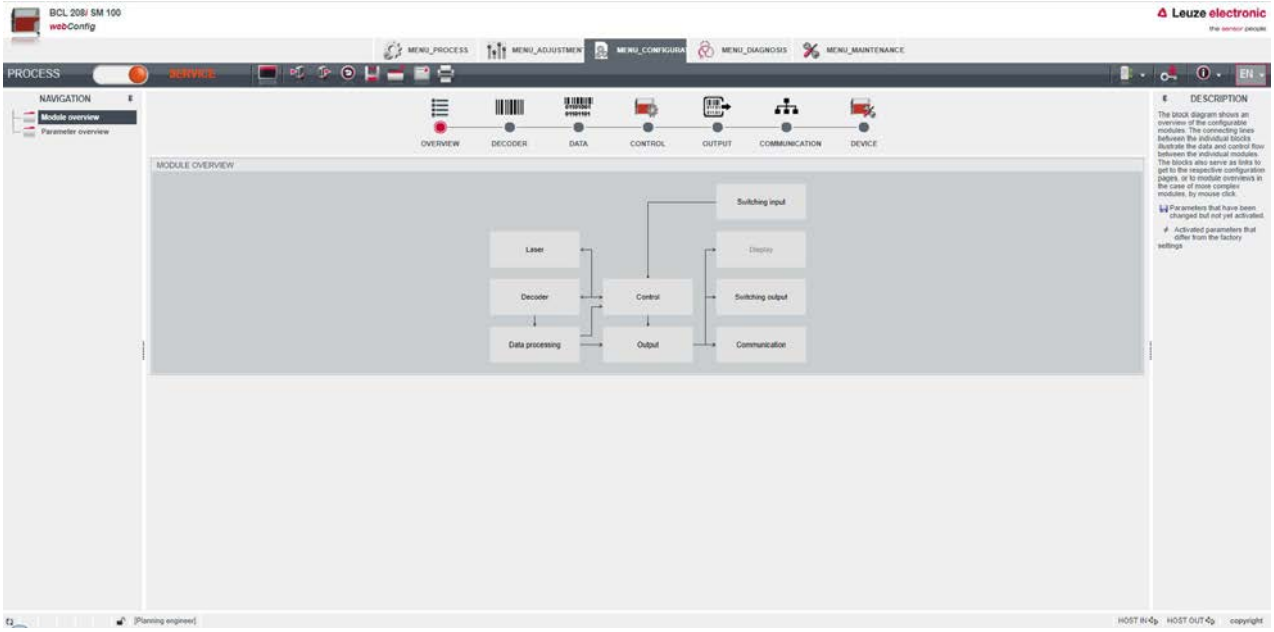

Fig. 7.2: webConfig tool – CONFIGURATION menu

Overview of the configurable modules

- Overview
  - The individual modules and their relationships to one another are graphically displayed in the module overview. The display is context sensitive, i.e. click a module to directly access the corresponding submenu.
- Decoder
  - Configuration of the decoder table, such as code type, number of digits, etc.
- Data
  - Configuration of code content, such as filtering, segmentation of bar code data, etc.
- Control
  - Configuration of activation and deactivation, e.g. auto-activation, AutoReflAct, etc.
- Output
  - Configuration of data output, header, trailer, reference code, etc.
- Communication
  - Configuration of the host interface and the service interface
- Device
  - Configuration of the switching inputs and outputs

	NOTICE
	A description containing notes and explanations for all called-up functions can be found at the right-hand edge of the screen. The language that is used can be selected in the webConfig tool via the language selection list.

The webConfig tool is available for all bar code readers of the BCL 200i series. Because configuration of the BCL 248i PROFINET-IO device is performed via the PROFINET-IO controller, the module overview shown in the webConfig tool is, in this case, used only for displaying and checking the configured parameters.

The current configuration of your bar code reader is loaded upon startup of the webConfig tool. If you change the configuration via the control while the webConfig tool is running, you can use the [Load parameter from device] button after making the changes to update the display in the webConfig tool. This button appears in the upper left in the center window area in all submenus of the CONFIGURATION main menu.

8 Starting up the device - Configuration

ATTENTION

LASER

↳ Observe the safety notices in see chapter 2.5 "Laser safety notices".

8.1 PROFINET-IO

The PROFINET-IO communication profile defines how participants serially transmit their data via the transmission medium.

The PROFINET-IO communication profile is designed for efficient data exchange on the field level. Data exchange with the devices occurs primarily cyclically. For configuration, operation, observation and alarm handling, acyclic communication services are, however, used as well.

Depending on the communication requirements, PROFINET-IO offers suitable protocols and transfer methods:

Real Time communication (RT) via prioritized Ethernet frames for

- Cyclical process data (I/O data stored in the I/O area of the control)
- Alarms
- Clock synchronization
- Neighborhood information
- Address assignment/address resolution via DCP

TCP/UDP/IP communication via standard Ethernet TCP/UDP/IP frames for

- Establishing communication
- Acyclic data exchange, and also for the transfer of various information types such as:
  - Parameters for the module configuration while communication is being established
  - I&M data (Identification & Maintenance functions)
  - Reading diagnostic information
  - Reading I/O data
  - Writing device data

8.2 Starting the device

NOTICE

Before commissioning, familiarize yourself with the operation and configuration of the BCL 248i.

Before connecting the supply voltage, recheck all connections and ensure that they have been properly made.

↳ Connect the +18 … 30 V DC supply voltage (typically +24 V DC).

⇨ The BCL 248i starts up, the PWR, NET and LINK LEDs indicate the operating state.

First, you need to assign its individual device name to the BCL 248i.

8.3 Configuration steps for a Siemens Simatic S7 control

The following steps are necessary for commissioning with a Siemens S7 control:

1. Preparation of the control system S7 PLC
2. Installation of the GSD file
3. Hardware configuration of the S7 PLC
4. Transmission of the PROFINET-IO configuration to the IO controller (S7 PLC)
5. Device naming
   - Configuration of the device name
   - Device naming
   - Assigning the device names to the configured IO devices
   - Assignment of MAC address – IP address – individual device names
6. Check device name

8.3.1 Step 1 – Prepare the control

The first step involves the assignment of an IP address to the IO controller (S7 PLC) and the preparation of the control for consistent data transmission.

	NOTICE
	↳ With the S7 control, make sure that at least Simatic Manager Version 5.4 + Service Pack 5 (V5.4+SP5) is used.

8.3.2 Step 2 – Installing GSD file

For the subsequent configuration of the IO devices, e.g., BCL 248i, the corresponding GSD file must be loaded first. In this file, all data necessary for operating the BCL 248i is described in modules. These are input and output data and device parameters for the functioning of the BCL 248i and the definition of the control and status bits.

GSD files

The term GSD stands for the textual description of a PROFINET-IO device model. For this purpose, the XML-based GSDML (Generic Station Description Markup Language) was introduced. In the following, the terms "GSD" or "GSD file" always refer to the GSDML-based format.

The GSDML file can support an arbitrary number of languages in one file. Every GSDML file contains a version of the BCL 248i device model. This is also reflected in the file name.

File name structure

The file name of the GSD file is constructed according to the following rule:

GSDML-[GSDML-schema version]-Leuze-BCL248i-[Date].xml

Explanation:

- GSDML schema version:
  Version identifier of the GSDML schema version used, e.g., V2.2
- Date:
  Release date of the GSD file in the format yyyymmdd.
  This date also stands for the release date of the file.

Example:

GSDML-V2.2-Leuze-BCL248i-20090503.xml

The GSD file is located directly in the product area under Downloads, i.e., for the BCL 248i:

www.leuze.com > Products > Identification > Bar code identification > Stationary bar code readers > BCL 200i > BCL 248i… > Downloads > Software/Driver

If parameters are changed in the project tool, for example, these changes are stored by the PLC in the project, not in the GSD file. The GSD file is a certified and integral part of the device and must not be changed. The file is not changed by the system either.

The functionality of the BCL 248i is defined via parameter sets. The parameters and their functions are structured in the GSD file using modules. A user-specific configuration tool is used during PLC program creation to integrate the required modules and configure them appropriately for their respective use. During operation of the BCL 248i on the PROFINET-IO, all parameters are set to default values. If these parameters are not changed by the user, the device functions with the default settings delivered by Leuze.

For the default settings of the BCL 248i, please refer to the following module descriptions.

8.3.3 Step 3 – Hardware configuration of the S7 PLC: Configuration

↳ Configure the PROFINET-IO system with the HW Config of the SIMATIC Manager by inserting the BCL 248i into your project.

⇨ Here, an IP address is assigned to a unique "device name".

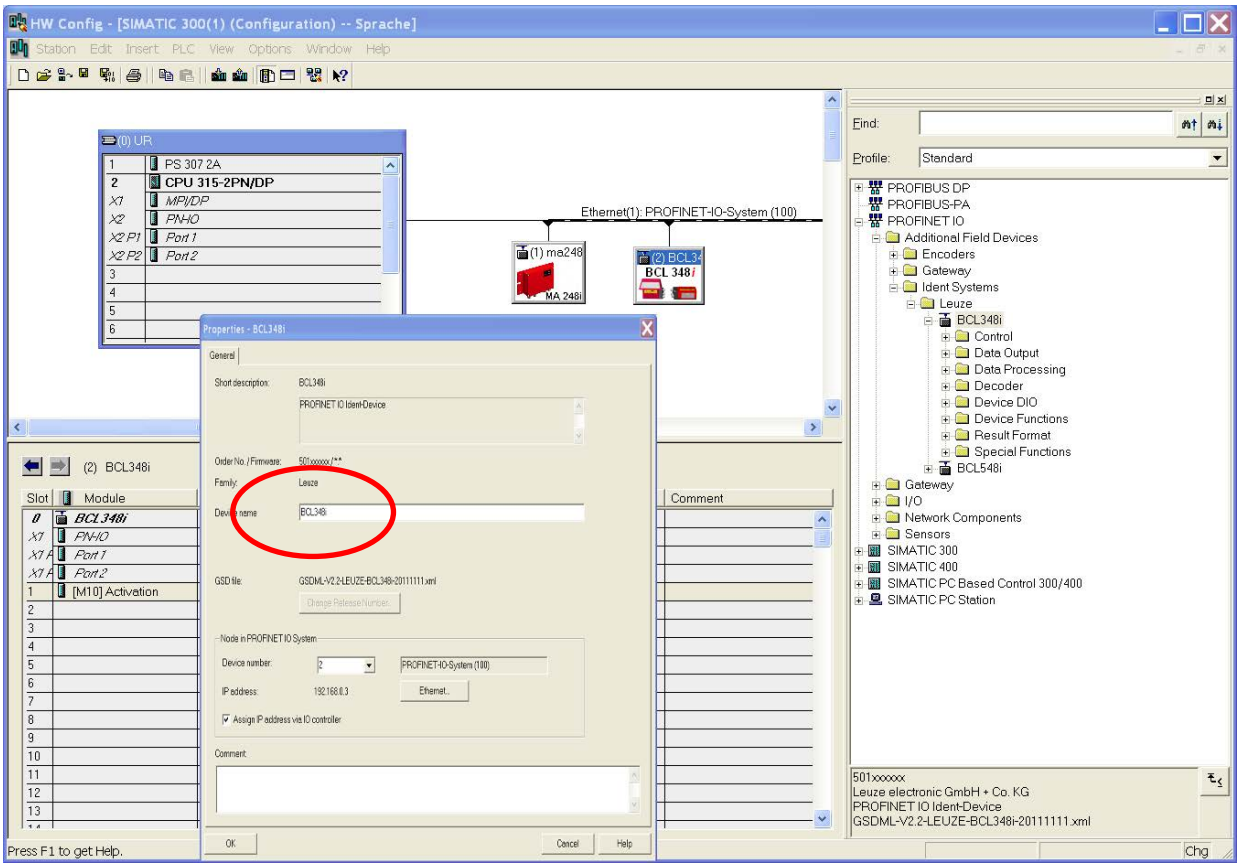

Fig. 8.1: Assignment of the device names to IP addresses

8.3.4 Step 4 – Transmit the configuration to the IO controller

↳ Transmit the PROFINET-IO configuration to the IO controller (S7 PLC).

After correct transmission to the IO controller (S7 PLC), the PLC automatically carries out the following activities:

- Check of device names
- Assignment of the IP addresses that were configured in the HW Config to the IO devices
- Establishment of a connection between the IO Controller and configured IO devices
- Cyclical data exchange

NOTICE	
	Participants that have not been "named" cannot be contacted yet at this point in time.

8.3.5 Step 5 – Set device name – device naming

The PROFINET-IO device has a unique MAC address that is part of the factory settings. You can find this on the name plate of the bar code reader.

This information is used to assign a unique, plant-specific device name ("NameOfStation") to the device via the "Discovery and Configuration Protocol" (DCP).

The PROFINET-IO also uses the "Discovery and Configuration Protocol" (DCP) for the IP address assignment during each system boot-up if the IO device is located in the same subnet.

	NOTICE
	All BCL 248i participants in a PROFINET-IO network must be located in the same subnet.

Device naming

PROFINET-IO defines the "naming of the device" as the creation of a name-based relationship for a PROFINET-IO device.

Assigning the device name to the configured IO devices

↳ Select the respective BCL 248i bar code reader for the "device naming" based on its MAC address.

⇨ This participant is assigned the unique "device name." This must match the device name in the HW config and must not be longer than 255 characters.

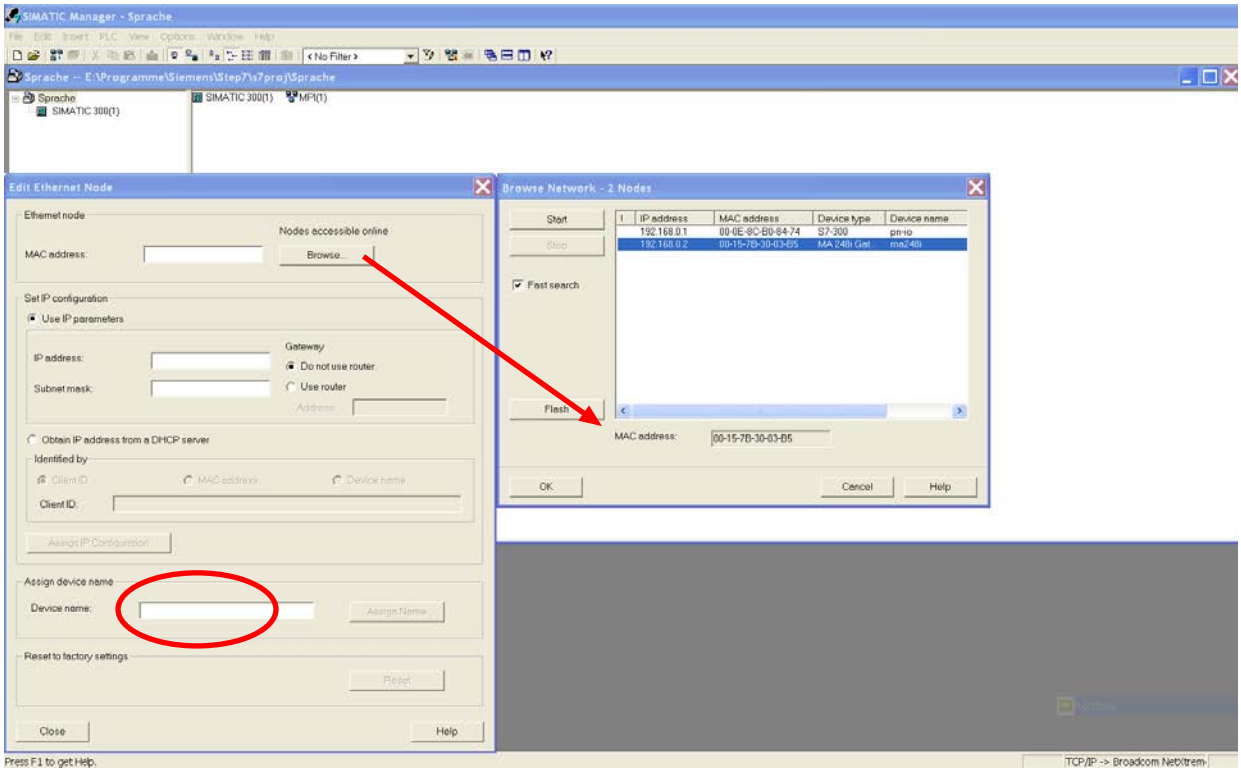

Fig. 8.2: Assigning the device names to the configured IO devices

	NOTICE
	Multiple BCL 248i can be distinguished by the MAC addresses displayed. The MAC address may be found on the name plate of the respective bar code reader.

Assignment of MAC address – IP address – individual device name

- Assign an IP address (suggested by the PLC), a subnet mask and, if required, a router address, and assign this data to the named participant ("device name").
- ⇨ From now on, and when programming, only the unique "device name" is used.

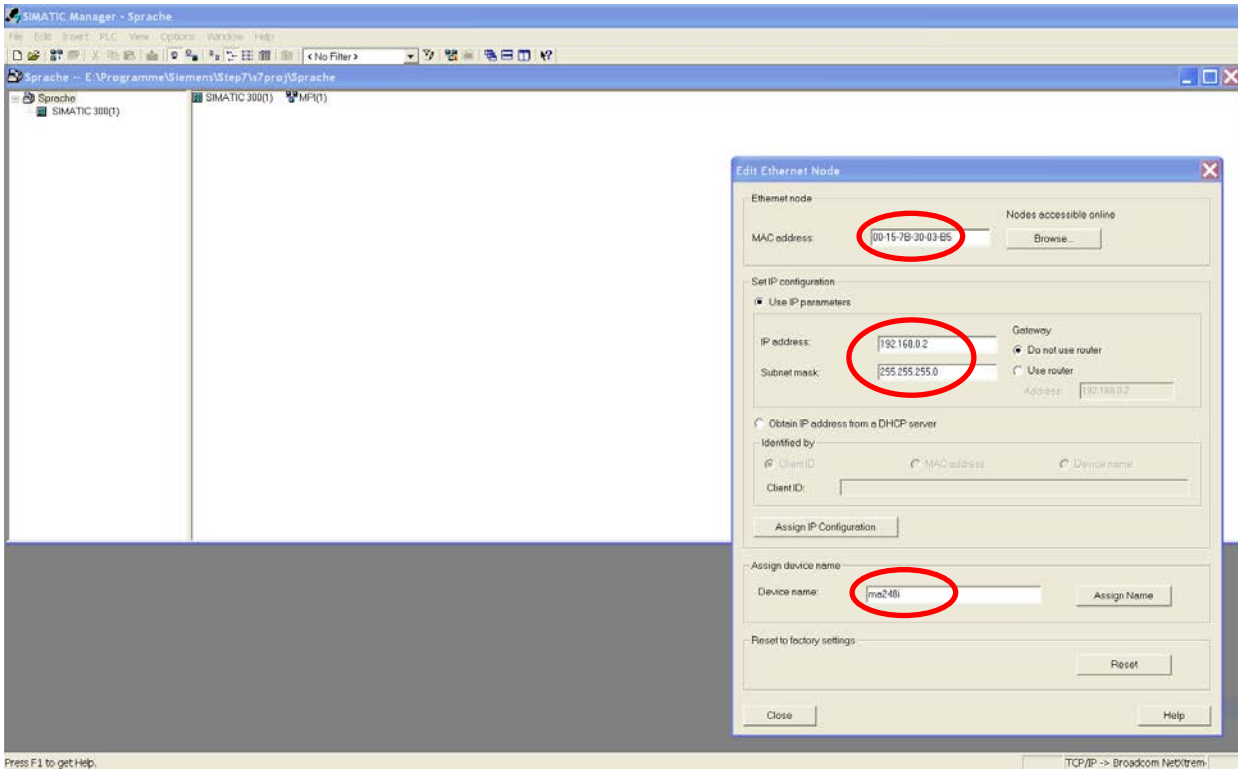

Fig. 8.3: MAC address – IP address – individual device name

8.3.6 Step 6 – Check device name

- After completing the configuration phase, recheck the "device names" that have been assigned. Ensure that these are unique and that all participants are located in the same subnet.

8.3.7 Manually setting the IP address

If you would like to directly access webConfig, the IP address must be set manually.

On delivery, the device has the following network address:

- IP address: 192.168.60.101
- Subnet mask: 255.255.255.0

Setting the IP address via PC/laptop

Setting the network address on the PC (example for Windows 7):

- Log in as administrator.
- Select **Start > System control > Network and Internet > Network and Sharing Center**.
- Select **LAN connection** and double-click to open the **Properties** dialog.
- Select **Internet Protocol Version 4 (TCP/IPv4)** and click on the [Properties] button.
- Set the IP address of the PC.

The IP address of the PC must not be identical to the IP address of the sensor.

Example:

- IP address of the sensor: 192.168.60.101
- IP address of the PC: 192.168.60.110
- Set the subnet mask of the PC to the same value as on the sensor.

Example: 255.255.255.0

- Confirm all of the settings dialogs with [OK] or [Close].
- Connect the Ethernet interface of the device directly to the LAN port of the PC.
- Start the webConfig tool using your PC's Internet browser with IP address 192.168.60.101.

NOTICE
If the IP address is incorrect, the device cannot be accessed. Make certain that the correct IP address is entered. The device can otherwise no longer be accessed.

Setting the IP address with Device-Finder

- Download the program **Device-Finder** from the Internet to the PC.
- Call up the Leuze home page: **www.leuze.com**.
- Enter the type designation or part number of the device as the search term.
  The program **Device-Finder** can be found on the product page for the device under the *Downloads* tab.
- Connect the Ethernet interface of the device directly to the LAN port of the PC.
- Start the program **Device-Finder**.
  - The program displays all sensors of the BCL 200i series that are available in the network.
- Select your sensor from the list of sensors of the BCL 200i series.
- Change the IP address of the sensor to the desired IP address.

8.3.8 MAC address

The MAC address (Media Access Control address) of the device may be found on the name plate.

Address Link Label

The "Address Link Label" is an additional stick-on label that is affixed to the device.

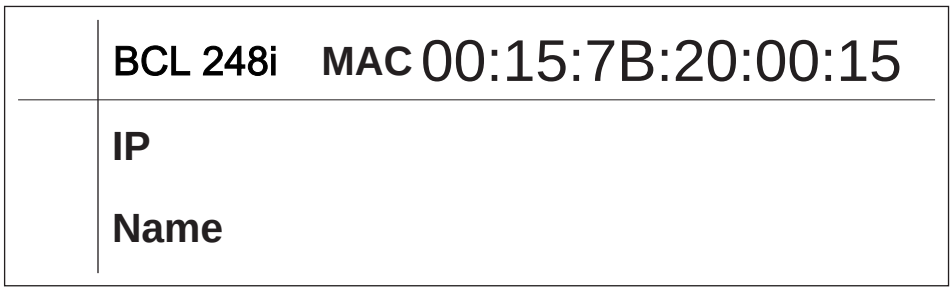

Fig. 8.4: Example: "Address Link Label"

- The "Address Link Label" contains the MAC address (Media Access Control address) of the device and makes it possible to enter the IP address and the device name manually.

  The area of the "Address Link Label" on which the MAC address is printed can be separated from the remainder of the stick-on label if necessary using the perforation.
- The "Address Link Label" can be removed from the device and affixed in the installation and layout diagrams to designate the device.
- Once it is affixed in the documents, the "Address Link Label" establishes a unique reference between the mounting location, the MAC address or the device, and the associated control program.

  There is no need for time-consuming searching, reading, and manually writing down of the MAC addresses of every device that is installed in the system.

	NOTICE
	Each device with Ethernet interface is uniquely identified via the MAC address assigned during production. The MAC address is also listed on the name plate of the device. If multiple devices are commissioned in a system, the MAC address of each installed device must be correctly assigned, e.g., during programming of the control.

- Remove the "Address Link Label" from the device.
- If necessary, add the IP address and the device name to the "Address Link Label".
- Affix the "Address Link Label" in the documents, e.g., in the installation diagram, according to the position of the device.

8.3.9 Ethernet host communication

This chapter is only of interest if an additional IP address independent of the device name is to be established for an additional communication channel, e.g. TCP/IP.

The control generally also assigns an IP address to the actual device name. The Ethernet host communication enables the configuration of connections to an external host system. Both UDP as well as TCP/IP (in either client or server mode) can be used. The connection-free UDP protocol is used primarily to transfer process data to the host (monitor operation). The connection-oriented TCP/IP protocol can also be used to transfer commands from the host to the device. With this connection, the data is backed up by the TCP/IP protocol itself.

If you would like to use the TCP/IP protocol in your application, you must also define whether the BCL 248i is to operate as a TCP client or as a TCP server. Both protocols can be activated simultaneously and used in parallel.

- Contact your network administrator to determine which communication protocol is used.

8.3.10 TCP/IP

- Activate the TCP/IP protocol.
- Set the TCP/IP mode of the bar code reader.

TCP client mode

In TCP client mode, the bar code reader actively establishes the connection to the superior host system (PC/PLC as server). The bar code reader requires from the user the IP address of the server (host system) and the port number on which the server (host system) accepts a connection. In this case, the bar code reader determines when and with whom a connection is established.

- With a bar code reader as TCP client, set the following values:
  - IP address of the TCP server (normally the PLC/host computer)
  - Port number of the TCP server
  - Timeout for the wait time for an answer from the server
  - Repetition time for renewed communication attempt following a timeout

TCP server mode

In TCP server mode, the superior host system (PC/PLC) actively establishes the connection and the connected bar code reader waits for the connection to be set up. The TCP/IP stack must be informed by the user as to the local port of the bar code reader (port number) on which connection requests from a client application (host system) are to be received. If there is a connection request and a connection is established by the superior host system (PC/PLC as client), the bar code reader (in server mode) accepts the connection. Data can then be sent and received.

- With a bar code reader as TCP server, set the following values:
  - Port number for the communication of the bar code reader with the TCP clients

The corresponding adjustment options can be found in the webConfig tool under **Configuration > Communication > Host communication**.

8.3.11 UDP

The bar code reader requires from the user the IP address and the port number of the communication partner. In the same way, the host system (PC/PLC) also requires the set IP address of the bar code reader and the selected port number. By assigning these parameters, a socket is formed via which the data can be sent and received.

- Activate the UDP protocol
- Set the following values:
  - IP address of the communication partner
  - Port number of the communication partner

The corresponding adjustment options can be found in the webConfig tool under **Configuration > Communication > Host communication**.

All other parameters required for the reading task, such as setting the code type and number of digits, etc., are set using the engineering tool of the PLC with the aid of the various available modules (see chapter 8.4 "Commissioning via the PROFINET-IO").

8.4 Commissioning via the PROFINET-IO

8.4.1 General information

The BCL 248i is designed as a modular field device. The PROFINET-IO functionality of the device is defined via parameter sets that are combined in modules (slots) and sub-modules (sub-slots). The further addressing within subslots is then accomplished via an index. The modules are included in a XML-based GSD file, which is supplied as an integral part of the device. By using a user-specific configuration tool, such as, e.g. SIMATIC Manager for the Siemens PLC, the required modules are integrated into a project during commissioning and its settings and parameters are configured accordingly. These modules are provided by the GSD file.

	NOTICE
	All input and output modules described in this documentation are described from the viewpoint of the control (IO controller): - Input data arrives at the control. - Output data is sent out by the control.

Detailed information on how to prepare the control and the GSD file see chapter 8.3 "Configuration steps for a Siemens Simatic S7 control".

For the default settings of the BCL 248i, please refer to the following module descriptions.

	NOTICE
	Please note that the set data is overwritten by the PLC. Some controls make available a so-called "universal module". This module must not be activated for the BCL 248i.

From the perspective of the device, a distinction is made between PROFINET-IO parameters and internal parameters. PROFINET-IO parameters are all parameters that can be changed via the PROFINET-IO and are described in the following modules. Internal parameters, on the other hand, can only be changed via a service interface and retain their value even following a PROFINET-IO configuration.

During the configuration process, the BCL receives parameter telegrams from the IO controller (PLC). Before this is evaluated and the respective parameter values are set, all PROFINET-IO parameters are reset to default values. This ensures that the parameters of modules that are not selected are set to the default values.

8.4.2 Permanently defined parameters/device parameters

On the PROFINET-IO, parameters may be stored in modules or may be defined permanently in a PROFINET-IO participant.

Depending on the configuration tool, the permanently defined parameters are called "common" parameters or device-specific parameters.

These parameters must always be present. They are defined outside configuration modules and are thus connected to the base module (DAP: Device Access Point) that is addressed via Slot 0/Subslot 0

In SIMATIC Manager, the permanently defined parameters are set via object properties of the device. The module parameters are configured via the module list of the selected device. By selecting the project properties of a module, the respective parameters may be set if required.

The following list contains the device parameters that are permanently defined in the BCL 248i (DAP Slot 0/ Subslot 0) but are configurable. These parameters always exist and are available independent of the modules.

Tab. 8.1: Device parameters

Parameter	Description	Address	Data type	Value range	Default
Profile number	Number of the activated profile, for BCL 248i constant with the value 0.	0	UNSIGNED8	0 … 255	0
Code type 1	Released code type; no code means that all subsequent code tables are also deactivated. The valid number of digits also depends on the code type.	1.0 … 1.5	BitArea	0: No code 1: 2/5 Interleaved 2: Code39 3: Code32 6: UPC, UPCE 7: EAN8, EAN13 8: Code128 10: EAN Addendum 11: Codabar 12: Code93 13: GS1 DataBar OMNIDIRECTIONAL 14: GS1 DataBar LIMITED 15: GS1 DataBar EXPANDED	1
Number of digits mode	Interpretation of the number of digits	2.6	Bit	0: Enumeration 1 : Range	0
Number of digits 1	Decodable number of digits; in the case of a range, this number defines the lower limit. Specifying a 0 for the number of digits means that this entry is ignored for the device.	2.0 … 2.5	UNSIGNED8	0 … 63	10
Number of digits 2	Decodable number of digits; in the case of a range, this number defines the upper limit.	3	UNSIGNED8	0 … 63	0
Number of digits 3	Decodable number of digits in the **enumeration** mode.	4	UNSIGNED8	0 … 63	0

Parameter	Description	Address	Data type	Value range	Default
Number of digits 4	Decodable number of digits in the **enumeration** mode.	5	UNSIGNED8	0 … 63	0
Number of digits 5	Decodable number of digits in the **enumeration** mode.	6	UNSIGNED8	0 … 63	0
Reading reliability	Min. reading reliability to be achieved in order to output a read code.	7	UNSIGNED8	1 … 100	4
Check digit method	Used check digit procedure	8.0 … 8.6	BitArea	0: Standard check digit evaluation 1: No check digit verification 2: MOD10 Weight 3 3: MOD10 Weight2 4: MOD10 Weight 4…9 5: MOD11 Cont 6: MOD43 7: MOD16	0
Check digit output	Turns the check digit output on or off.	8.7	Bit	Check digit output 0: Standard 1: Not standard	0
Code type 2	See code type 1	9.0 … 9.5	BitArea	See code type 1	0
Number of digits mode 2	Specifies how the subsequent numbers of digits are to be interpreted.	10.6	Bit	0: Enumeration 1 : Range	0
Number of digits 2.1	Decodable number of digits; in the case of a range, this number defines the lower limit.	10.0 … 1 0.5	UNSIGNED8	0 … 63	0
Number of digits 2.2	Decodable number of digits; in the case of a range, this number defines the upper limit.	11	UNSIGNED8	0 … 63	0
Number of digits 2.3	Decodable number of digits in the **enumeration** mode.	12	UNSIGNED8	0 … 63	0
Number of digits 2.4	Decodable number of digits in the **enumeration** mode.	13	UNSIGNED8	0 … 63	0
Number of digits 2.5	Decodable number of digits in the **enumeration** mode.	14	UNSIGNED8	0 … 63	0
Reading reliability 2	Min. reading reliability to be achieved in order to output a read code.	15	UNSIGNED8	1 … 100	4

Parameter	Description	Address	Data type	Value range	Default
Check digit method 2	Used check digit procedure	16.0 … 16.6	BitArea	0: Standard check digit evaluation 1: No check digit verification 2: MOD10 Weight 3 3: MOD10 Weight2 4: MOD10 Weight 4…9 5: MOD11 Cont 6: MOD43 7: MOD16	0
Check digit output 2	Turns the check digit output on or off.	16.7	Bit	Check digit output 0: Standard 1: Not standard	0
Code type 3	See code type 1	17.0 … 17.5	BitArea	See code type 1	0
Number of digits mode 3	Specifies how the subsequent numbers of digits are to be interpreted.	18.6	Bit	0: Enumeration 1 : Range	0
Number of digits 3.1	Decodable number of digits; in the case of a range, this number defines the lower limit.	18.0 … 18.5	UNSIGNED8	0 … 63	0
Number of digits 3.2	Decodable number of digits; in the case of a range, this number defines the upper limit.	19	UNSIGNED8	0 … 63	0
Number of digits 3.3	Decodable number of digits in the **enumeration** mode.	20	UNSIGNED8	0 … 63	0
Number of digits 3.4	Decodable number of digits in the **enumeration** mode.	21	UNSIGNED8	0 … 63	0
Number of digits 3.5	Decodable number of digits in the **enumeration** mode.	22	UNSIGNED8	0 … 63	0
Reading reliability 3	Min. reading reliability to be achieved in order to output a read code.	23	UNSIGNED8	1 … 100	4
Check digit method 3	Used check digit procedure	24.0 … 24.6	BitArea	0: Standard check digit evaluation 1: No check digit verification 2: MOD10 Weight 3 3: MOD10 Weight2 4: MOD10 Weight 4…9 5: MOD11 Cont 6: MOD43 7: MOD16	0

Parameter	Description	Address	Data type	Value range	Default
Check digit output 3	Turns the check digit output on or off.	24.7	Bit	Check digit output 0: Standard 1: Not standard	0
Code type 4	See code type 1	25.0 … 25.5	BitArea	See code type 1	0
Number of digits mode 4	Specifies how the subsequent numbers of digits are to be interpreted.	26.6	Bit	0: Enumeration 1 : Range	0
Number of digits 4.1	Decodable number of digits; in the case of a range, this number defines the lower limit.	26.0 … 26.5	UNSIGNED8	0 … 63	0
Number of digits 4.2	Decodable number of digits; in the case of a range, this number defines the upper limit.	27	UNSIGNED8	0 … 63	0
Number of digits 4.3	Decodable number of digits in the **enumeration** mode.	28	UNSIGNED8	0 … 63	0
Number of digits 4.4	Decodable number of digits in the **enumeration** mode.	29	UNSIGNED8	0 … 63	0
Number of digits 4.5	Decodable number of digits in the **enumeration** mode.	30	UNSIGNED8	0 … 63	0
Reading reliability 4	Min. reading reliability to be achieved in order to output a read code.	31	UNSIGNED8	1 … 100	4
Check digit method 4	Used check digit procedure	32.0 … 32.6	BitArea	0: Standard check digit evaluation 1: No check digit verification 2: MOD10 Weight 3 3: MOD10 Weight2 4: MOD10 Weight 4…9 5: MOD11 Cont 6: MOD43 7: MOD16	0
Check digit output 4	Turns the check digit output on or off.	32.7	Bit	Check digit output 0: Standard 1: Not standard	0

Parameter length: 33 bytes

Input data

None

Output data

None

NOTICE
Note on number of digits If 0 is specified in a field for the number of digits, the corresponding parameter is ignored by the device firmware.

Example:

For a code table entry x, the two code lengths 10 and 12 are to be enabled. For this purpose, the following number of digit entries are necessary:

Number of digits mode x = 0 (enumeration)

Number of digits x.1 = 10

Number of digits x.2 = 12

Number of digits x.3 = 0

Number of digits x.4 = 0

Number of digits x.5 = 0

8.5 Overview of the project modules

When using PROFINET-IO modules, the parameters are assembled dynamically, i.e., only the parameters that were selected by the activated modules are changed.

The BCL has parameters (device parameters) that must always be present. These parameters are defined outside of modules and are thus linked to the base module (DAP).

In the current version, a total of 58 modules are available for use. A device module (DAP, see chapter 8.4.2 "Permanently defined parameters/device parameters") is used for basic configuration of the BCL 248i and is permanently integrated into the project. Further modules may be included into the project according to requirements and application.

The modules fall into the following categories:

- Parameter module for configuring the BCL 248i.
- Status or control modules that influence the input/output data.
- Modules that may include both parameters and control or status information.

A PROFINET-IO module defines the existence and meaning of the input and output data. In addition, it defines the necessary parameters. The arrangement of the data within a module is defined.

The composition of the input/output data is defined via the module list.

The BCL 248i interprets the incoming output data and triggers the appropriate reactions in the BCL 248i. The interpreter for processing the data is adapted to the module structure during initialization.

The same applies for the input data. Using the module list and the defined module properties, the input data string is formatted and referenced to the internal data.

During cyclic operation, the input data is then passed on to the IO controller.

During the startup or initialization phase, the BCL 248i sets the input data to an initial value (usually = 0).

NOTICE
The modules can be grouped together in any order in the engineering tool. Note, however, that many BCL 248i modules contain linked data (e.g., the decoding result modules 20-41). It is important to maintain the consistency of these data. The BCL 248i offers 58 different modules. Each of these modules may only be selected once; otherwise, the BCL 248i ignores the configuration. The BCL 248i checks its max. permissible number of modules. The control also reports an error if the input and output data across all selected modules exceed a total length of 1024 bytes. The specific limits of the individual modules of the BCL 248i can be found in the GSD file.

The following module overview shows the characteristics of the individual modules:

Tab. 8.2: Module overview

Module	Description	Module identifier	Submodule identifier	Parameter	Output data	Input data
Device parameters	Module independent device parameters	1	0	33	0	0
Interface PN-IO	Ethernet interface description	1	1	0	0	0
Port 1	Ethernet Port 1	1	2	0	0	0
Decoder						
Code table extension 1	Extension of the existing code table	1001	1	8	0	0
Code table extension 2	Extension of the existing code table	1002	1	8	0	0
Code table extension 3	Extension of the existing code table	1003	1	8	0	0
Code table extension 4	Extension of the existing code table	1004	1	8	0	0
Code type properties	The module permits changing the muted zones as well as the line-gap ratios.	1005	1	6	0	0
Code reconstruction technology	Support of code reconstruction technology	1007	1	4	0	0
Control						
Activation	Control bits for the standard reading operation	1010	1	1	0	1
Reading gate control	Extended control of the reading gate	1011	1	6	0	0
Multi-label	Output of several bar codes per reading gate	1012	1	2	1	0
Fragmented read result	Transmission of the read results in the fragmented mode	1013	1	1	2	0
Interlinked read result	Interlinking of the individual read results within one reading gate	1014	1	1	0	0
Result format						
Decoder state	Status display – decoding	1020	1	0	1	0
Decoding result 1	Bar code information 4 bytes max.	1021	1	0	6	0
Decoding result 2	Bar code information 8 bytes max.	1022	1	0	10	0
Decoding result 3	Bar code information 12 bytes max.	1023	1	0	14	0
Decoding result 4	Bar code information 16 bytes max.	1024	1	0	18	0
Decoding result 5	Bar code information 20 bytes max.	1025	1	0	22	0
Decoding result 6	Bar code information 24 bytes max.	1026	1	0	26	0

Module	Description	Module identifier	Submodule identifier	Parameter	Output data	Input data
Decoding result 7	Bar code information 28 bytes max.	1027	1	0	30	0
Decoding result 8	Bar code information 64 bytes max.	1028	1	0	66	0
Decoding result 9	Bar code information 128 bytes max.	1029	1	0	130	0
Data formatting	Specification for formatting the data output	1030	1	23	0	0
Reading gate number	Number of the reading gate since system start-up	1031	1	0	2	0
Reading gate time	Time between opening and closing	1032	1	0	2	0
Code position	Relative position of the bar code label in the scanning beam	1033	1	0	2	0
Reading reliability	Calculated reading reliability for the transmitted bar code	1034	1	0	2	0
Scans per bar code	Number of scans between the first and the last time of detecting the bar code	1035	1	0	2	0
Scans with information	Number of scans with processed information	1036	1	0	2	0
Decoding quality	Quality of the read result	1037	1	0	1	0
Code direction	Orientation of the bar code	1038	1	0	1	0
Number of digits	Number of digits in the bar code	1039	1	0	1	0
Code type	Bar code type	1040	1	0	1	0
Data Processing						
Characteristics filter	Configuration of the characteristics filter	1050	1			
Data filtering	Configuration of data filtering	1051	1	60	0	0
Segmentation acc. to the EAN process	Activation and configuration of the segmentation acc. to the EAN process	1052	1	27	0	0
Segmentation via fixed positions	Activation and configuration of the segmentation via fixed positions	1053	1	37	0	0
Segmentation acc. to identifier and separator	Activation and configuration of the segmentation acc. to identifier and separator	1054	1	29	0	0
String handling parameter	Definition of placeholder characters for bar code segmentation, filtering, completion and reference code processing	1055	1	3	0	0
Device functions						

Module	Description	Module identifier	Submodule identifier	Parameter	Output data	Input data
Device status	Display of the device status as well as control bits for reset and standby	1060	1	0	1	1
Laser control	Switch-on and switch-off positions of the laser	1061	1	4	0	0
Alignment	Alignment mode	1063	1	0	1	1
Switching inputs/ outputs SWIO or Device-IO						
SWI1 switching input	Parameter settings SWI1	1070	1	23	0	0
Switching output SWO2	Parameter settings SWO2	1071	1	23	0	0
SWIO status and control	Handling of switching input and switching output signals	1074	1	0	2	2
Data output						
Sorting	Sorting support	1080	1	3	0	0
Reference code comparator 1	Definition of the operation mode of reference code comparator 1	1081	1	8	0	0
Reference code comparator 2	Definition of the operation mode of reference code comparator 2	1082	1	8	0	0
Reference code comparison pattern 1	Definition of the 1st comparison pattern	1083	1	31	0	0
Reference code comparison pattern 2	Definition of the 2nd comparison pattern	1084	1	31	0	0
Special functions						
Status and control	Grouping of multiple status and control bits	1090	1	0	1	0
AutoReflAct	Automatic reflector activation	1091	1	2	0	0
AutoControl	Automatic monitoring of the reading properties	1092	1	3	1	0
multiScan over PROFINET						
multiScan master	Definition of the mode of operation of the multiScan master function	1100	1	10	0	0
multiScan slave addresses 1	Configuration of the slave addresses for slaves 11-20	1101	1			
multiScan slave addresses 2	Configuration of the slave addresses for slaves 21-32	1102	2			

NOTICE

For the standard case, at least module 10 (activation) and one of the modules 21 … 27 (decoding result 1 … 7) should be integrated.

8.6 Decoder modules

8.6.1 Modules 1-4 – Code table extensions 1 to 4

PROFINET-IO module identifier

Module ID: 1001 … 1004

Submodule ID: 1

Description

The modules extend the code type tables of the device parameters and permit the additional definition of further 4 code types together with the respective number of digits.

Parameter

Tab. 8.3: Parameters for modules 1-4

Parameter	Description	Rel. addr.	Data type	Value range	Default
Code type	Released code type; no code means that all subsequent code tables are also deactivated. The valid number of digits also depends on the code type.	0.0 … 0.5	BitArea	0: No code 1: 2/5 Interleaved 2: Code39 3: Code32 6: UPC, UPCE 7: EAN8, EAN13 8: Code128 10: EAN Addendum 11: Codabar 12: Code93 13: GS1 DataBar OMNIDIRECTIONAL 14: GS1 DataBar LIMITED 15: GS1 DataBar EXPANDED	0
Number of digits mode	Interpretation of the number of digits	1.6	Bit	0: Enumeration 1 : Range	0
Number of digits 1	Decodable number of digits; in the case of a range, this number defines the lower limit. Specifying a 0 for the number of digits means that this entry is ignored for the device.	1.0 … 1.5	UNSIGNED8	0 … 63	0
Number of digits 2	Decodable number of digits; in the case of a range, this number defines the upper limit.	2	UNSIGNED8	0 … 63	0
Number of digits 3	Decodable number of digits in the **enumeration** mode.	3	UNSIGNED8	0 … 63	0
Number of digits 4	Decodable number of digits in the **enumeration** mode.	4	UNSIGNED8	0 … 63	0
Number of digits 5	Decodable number of digits in the **enumeration** mode.	5	UNSIGNED8	0 … 63	0

Parameter	Description	Rel. addr.	Data type	Value range	Default
Reading reliability	Min. reading reliability to be achieved in order to output a read code.	6	UNSIGNED8	1 … 100	4
Check digit method	Used check digit procedure	7.0 … 7.6	BitArea	0: Standard check digit evaluation 1: No check digit verification 2: MOD10 Weight 3 3: MOD10 Weight2 4: MOD10 Weight 4…9 5: MOD11 Cont 6: MOD43 7: MOD16	0
Check digit output	Turns the check digit output on or off. Standard means that the check digit is transmitted according to the applicable standard for the selected code type. If no check digit transmission is intended for the selected code type, then "Standard" means that the check digit is not transmitted and "Not Standard" means that the check digit is transmitted anyway.	7.7	Bit	Check digit output 0: Standard 1: Not standard	0

Refer to the notice on the number of digits in see chapter 8.4.2 "Permanently defined parameters/device parameters".

Parameter length

8 bytes

Input data

None

Output data

None

8.6.2 Module 5 – Code type features (symbology)

PROFINET-IO module identifier

Module ID: 1005

Submodule ID: 1

Description

The module defines extended features for various code types.

Parameter

Tab. 8.4: Parameters for module 5

Parameter	Description	Addr.	Data type	Value range	Default
Maximum width deviation	Max. permitted width deviation of a character in percent of the directly adjacent character	0	UNSIGNED8	0 … 100%	15 %
Code 39 max. element ratio	Permissible ratio between maximum and minimum element of Code 39.	1	UNSIGNED8	0 … 255	8
Code 39 character gap	Permissible ratio for the gap between two characters for Code 39.	2	UNSIGNED8	0 … 255	3
Codabar max. element ratio	Permissible ratio between maximum and minimum element of the Codabar code.	3	UNSIGNED8	0 … 255	8
Codabar character gap	Permissible ratio for the gap between two characters for the Codabar code.	4	UNSIGNED8	0 … 255	3
Codabar Monarch Mode	The decoding of a Monarch bar code as Codabar bar code can be switched on or off.	5.0	Bit	0: Off 1: On	0
Codabar start/stop character	Switches the transmission of a start and stop character for the Codabar code on and off.	5.1	Bit	0: Off 1: On	0
UPC-E extension	Switches the extension of a UPC-E code to a UPC-A result on and off.	5.4	Bit	0: Off 1: On	0
Code 128: activate EAN header	Switches the output of the EAN header on and off.	5.5	Bit	0: Off 1: On	1
Code 39 conversion	Defines the conversion method used for Code 39.	5.6 … 5.7	BitArea	0: Standard (usual conversion method) 1: Standard ASCII (combination of standard method and ASCII method) 2: ASCII (This conversion method uses the entire ASCII character set)	0

Parameter length

6 bytes

Input data

None

Output data

None

8.6.3 Module 7 – Code reconstruction technology

PROFINET-IO module identifier

Module ID: 1007

Submodule ID: 1

Description

Module for supporting the code reconstruction technology

Parameter

Tab. 8.5: Parameters for module 7

Parameter	Description	Addr.	Data type	Value range	Default
Maximum width ratio	The maximum width ratio is used to determine the light zones. The light zones identify the beginning or end of patterns.	0	UNSIGNED8	0 … 255	13
Minimum number of elements	A pattern must have at least this minimum number of duo-elements, i.e. no patterns which have fewer duo-elements.	1 … 2	UNSIGNED16	2 … 400	6
Code fragment mode	This parameter can be used to switch CRT mode on and off.	3.0	Bit	0: Switched off 1: Switched on	1
Processing end at end of label	If this parameter is set, a decoded bar code is only completely decoded after the scanning beam has exited the entire bar code.	3.2	Bit	0: Switched off 1: Switched on	0

Parameter length

4 bytes

Input data

None

Output data

None

NOTICE

Processing end at end of label

If this parameter is set, a decoded bar code is only completely decoded after the scanning beam has exited the entire bar code. This mode is useful if the quality of the bar code is to be assessed, since more scans are now available for the quality evaluation of the bar code.

This parameter should be set if the AutoControl function is activated (see chapter 8.15.3 "Module 92 – AutoControl"). If the parameter is not set, the bar code is immediately decoded and processed further as soon as all necessary bar code elements are available

8.7 Control modules

8.7.1 Module 10 – Activations

PROFINET-IO module identifier

Module ID: 1010

Submodule ID: 1

Description

The module defines the control signals for the reading operation of the bar code reader. It is possible to select between standard reading operation and handshake operation.

In handshake operation, the control must acknowledge the data reception via the ACK bit before the new data is written into the input area.

After acknowledging the last decoding result, the input data is reset (filled with zeros).

Parameter

Tab. 8.6: Parameters for module 10

Parameter	Description	Addr.	Data type	Value range	Default
Mode	The parameter defines the mode in which the activation module is operated.	0	UNSIGNED8	0: Without ACK 1: With ACK	0

Parameter length

1 byte

Input data

None

Output data

Tab. 8.7: Output data for module 10

Output data	Description	Addr.	Data type	Value range	Initial value
Reading gate	Signal for activating the reading gate	0.0	Bit	1 > 0: Reading gate off 0 > 1: Reading gate active	0
	Free	0.1	Bit		0
	Free	0.2	Bit		0
	Free	0.3	Bit		0
Data acknowledgment	This control bit signals that the transmitted data have been processed by the master. Only relevant in handshake mode (with ACK).	0.4	Bit	0 > 1: Data has been processed by the master 1 > 0: Data has been processed by the master	0
Data reset	Deletes decoding results that may have been stored and resets the input data of all modules.	0.5	Bit	0 > 1: Data reset	0
	Free	0.6	Bit		
	Free	0.7	Bit		

Output data length

1 byte consistent

NOTICE	
	If several bar codes are decoded in sequence without the acknowledge mode having been activated, the input data of the result modules are overwritten with the respective most recently read decoding result. If a data loss in the control is to be avoided in such a case, mode 1 (with ACK) should be activated. If multiple decoding results occur within one reading gate, it is possible - dependent on the cycle time - that only the last decoding result is visible on the bus. In this case, the acknowledge mode MUST be used. There is otherwise a risk of data loss. Multiple, individual decoding results may occur within one reading gate if module 12 – Multi-label (see chapter 8.7.3 "Module 12 – Multi-label") or one of the identifier modules (see chapter 8.10 "Identifier") is used.

Data reset behavior

If the data reset control bit is activated, the following actions are carried out:

1. Deletion of decoding results that may still be stored.
2. Reset of module 13 – Fragmented read result (see chapter 8.7.4 "Module 13 – Fragmented read result"), i.e., even a partially transmitted read result is deleted.
3. Deletion of the input data areas of all modules.
   Exception: The input data of module 60 – device status (see chapter 8.11.1 "Module 60 – Device status") is not deleted. For the status byte of decoding result modules 20 … 27 (see chapter 8.8.2 "Modules 21-29 – Decoding result"), the two toggle bytes and the reading gate status remain unchanged.

See also

Module 20 – Decoder state [“ 64]

8.7.2 Module 11 – Reading gate control

PROFINET-IO module identifier

Module ID: 1011

Submodule ID

Description

With the module, the reading gate control of the bar code reader can be adapted to the application. With different parameters from the bar code reader, a time-controlled reading gate may be created. In addition, it defines the internal criteria for the reading gate end and the completeness inspection.

Parameter

Tab. 8.8: Parameters for module 11

Parameter	Description	Addr.	Data type	Value range	Default
Automatic reading gate repeat	The parameter defines the automatic repeat of reading gates.	0	Byte	0: No 1: Yes	0

Parameter	Description	Addr.	Data type	Value range	Default
Reading gate end mode/completeness mode	This parameter can be used to configure the completeness inspection.	1	Byte	0: Independent of decoding, i.e., the reading gate is not terminated prematurely. 1: Dependent on decoding, i.e, the reading gate is terminated if the configured number of bar codes to be decoded has been reached. 1) 2: DigitRef table-dependent, i.e., the reading gate is terminated if each bar code stored in the code type table has been decoded. 2) 3: Ident list dependent, i.e., the reading gate is terminated if each identifier stored in a list could be segmented via a respective bar code segmentation. 3) 4: Reference code comparison, i.e., the reading gate is terminated if a positive reference code comparison has taken place. 4)	1
Restart delay	The parameter specifies a time after which a reading gate is restarted. The BCL 248i generates its own periodic reading gate. The configured time is active only if the automatic reading gate repeat is switched on.	2	UNSIGNED16	0 … 65535 ms	0 ms
Max. reading gate time when scanning	The parameter switches off the reading gate after the set time has elapsed, thus limiting the reading gate to the set period.	4	UNSIGNED16	1 … 65535 ms 0: Reading gate activation is switched off	0 ms

1) see chapter 8.7.3 "Module 12 – Multi-label"

2) Corresponds to the settings carried out via the device module (see chapter 8.4.2 "Permanently defined parameters/device parameters") or module 1-4 – Code table extensions 1 to 4.

3) see chapter 8.10 "Identifier", modules 52-54 "identifier filter string"

4) see chapter 8.14.3 "Module 83 – Reference code comparison pattern 1" and see chapter 8.14.4 "Module 84 – Reference code comparison pattern 2"

Parameter length

6 bytes

Input data

None

Output data

None

8.7.3 Module 12 – Multi-label

PROFINET-IO module identifier

Module ID: 1012

Submodule ID: 1

Description

The module permits the definition of multiple bar codes with a different number of digits and/or code types in the reading gate and provides the necessary input data.

Parameter

Tab. 8.9: Parameters for module 12

Parameter	Description	Addr.	Data type	Value range	Default
Minimum number of bar codes	Minimum number of different bar codes scanned for per reading gate.	0	UNSIGNED8	0 … 64	1
Maximum number of bar codes	Maximum number of different bar codes scanned for per reading gate. Only if this number of bar codes has been reached, the reading gate is terminated prematurely.	1	UNSIGNED8	0 … 64	1

Parameter length

2 bytes

Input data

Tab. 8.10: Input data for module 12

Input data	Description	Addr.	Data type	Value range	Initial value
Number of decoding results	Number of decoding results which have not been fetched.	0	UNSIGNED8	0 … 256	0

Input data length

1 byte

Output data

None

This module is used to set the maximum and minimum number of bar codes which are to be decoded within a reading gate.

If parameter "minimum number of bar codes" = 0, it is not taken into account at the decoder control. If it is not equal to 0, this means that the bar code reader expects a number of labels within the set range.

If the number of decoded bar codes is within the set limits, no additional "No Reads" are output.

NOTICE

When using this module, the ACK mode should be activated (see chapter 8.7.1 "Module 10 – Activations", "Mode" parameter). Otherwise there is a risk of losing decoding results if the control is not fast enough.

8.7.4 Module 13 – Fragmented read result

PROFINET-IO module identifier

Module ID: 1013

Submodule ID: 1

Description

The module defines the transfer of fragmented reading results. To occupy few I/O data, the read results may be split into several fragments with this module. The fragments can then be transmitted one after another with a handshake.

Parameter

Tab. 8.11: Parameters for module 13

Parameter	Description	Addr.	Data type	Value range	Default
Fragment length	The parameter defines the maximum length of the bar code information per fragment.	0	UN-SIGNED8	1 … 128	0

Parameter length

1 byte

Input data

Tab. 8.12: Input data for module 13

Input data	Description	Addr.	Data type	Value range	Initial value
Fragment number	Current fragment number	0.0 … 0.3	BitArea	0 … 15	0
Remaining fragments	Number of fragments which still have to be read for a complete result.	0.4 … 0.7	BitArea	0 … 15	0
Fragment size	Fragment length, always corresponds to the configured fragment length, except for the last fragment.	1	UN-SIGNED8	0 … 128	0

Input data length

2 byte consistent

Output data

None

8.7.5 Module 14 – Interlinked read result

PROFINET-IO module identifier

Module ID: 1014

Submodule ID: 1

Description

This module is used to switch to a mode in which all decoding results within one reading gate are combined into a single read result.

Parameter

Tab. 8.13: Parameters for module 14

Parameter	Description	Addr.	Data type	Value range	Default
Separator character	This parameter is used to define a delimiter that is inserted between two individual decoding results.	0	UNSIGNED8	1 … 255 0: No delimiter is used.	';'

Parameter length

1 byte

Input data

None

Output data

None

NOTICE

An interlinked read result also requires module 12 – Multi-label. In this mode, the additional information transmitted in modules 31ff relates to the last decoding result in the chain.

8.8 Result format

In the following, various modules for the output of decoding results are listed. They have the same structure but different output lengths. The PROFINET-IO module concept does not cater for modules of variable data length.

NOTICE

Modules 20 … 27 are to be regarded as alternatives and should not be used in parallel.

Modules 30 … 41 can be combined freely with the decoding result modules.

8.8.1 Module 20 – Decoder state

PROFINET-IO module identifier

Module ID: 1020

Submodule ID: 1

Description

The module indicates the state of the decoding and of the automatic decoder configuration.

Parameter

None

Input data

Tab. 8.14: Input data for module 20

Input data	Description	Addr.	Data type	Value range	Initial value
Reading gate state	The signal indicates the current state of the reading gate. **Attention:** This does not necessarily correspond to the state at the time the bar code is scanned.	0.0	Bit	0: Off 1: On	0

Input data	Description	Addr.	Data type	Value range	Initial value
New result	The signal indicates whether a new decoding has occurred.	0.1	Bit	0: No 1: Yes	0
Result state	The signal indicates whether the bar code has been read successfully.	0.2	Bit	0: Successful reading 1: NOREAD	0
Further results in the buffer	The signal indicates whether further results are in the buffer.	0.3	Bit	0: No 1: Yes	0
Buffer overflow	The signal indicates that result buffers are occupied and the decoder rejects data.	0.4	Bit	0: No 1: Yes	0
New decoding	Toggle bit indicates whether decoding has occurred.	0.5	Bit	0 > 1: New result 1 > 0: New result	0
Result state	Toggle bit indicates that the bar code has not been read.	0.6	Bit	0 > 1: NOREAD 1 > 0: NOREAD	0
Waiting for acknowledgment	This signal represents the internal state of the control.	0.7	Bit	0: Base state 1: Control waiting for acknowledgment from the IO controller	0

Input data length

1 byte

Output data

None

Comments

The following bits are constantly updated, i.e. they are updated immediately after the respective event occurs:

Reading gate state

- Further results in the buffer
- Buffer overflow
- Waiting for acknowledgment

All other flags refer to the currently output decoding result.

If the input data is reset to the initial value (see chapter 8.8.3 "Module 30 – Data formatting"), the following bits are deleted:

- New result
- Result state

All others remain unchanged.

Data reset behavior

Upon data reset (see chapter 8.7.1 "Module 10 – Activations") the input data is deleted, except for the reading gate status and the two toggle bits.

8.8.2 Modules 21-29 – Decoding result

PROFINET-IO module identifier

Module ID: 1021…1029

Submodule ID: 1

Description

The module defines the transfer of the actually decoded reading results. The data is transmitted consistently over the entire range.

Parameter

None

Input data

Tab. 8.15: Input data for modules 21 … 27

Module no.	Input data	Description	Addr.	Data type	Value range	Initial value
21 … 29	Reading gate state	The signal indicates the current state of the reading gate. **Attention:** This does not necessarily correspond to the state at the time the bar code is scanned.	0.0	Bit	0: Off 1: On	0
21 … 29	New result	Signal indicates whether a new decoding result is present.	0.1	Bit	0: No 1: Yes	0
21 … 29	Result state	Signal indicates whether the bar code has been read successfully.	0.2	Bit	0: Successful reading 1: NOREAD	0
21 … 29	Further results in the buffer	Signal indicates whether further results are in the buffer.	0.3	Bit	0: No 1: Yes	0
21 … 29	Buffer overflow	Signal indicates that result buffers are occupied and the decoder rejects data.	0.4	Bit	0: No 1: Yes	0
21 … 29	New result	Toggle bit indicates that a new decoding result is present.	0.5	Bit	0 > 1: New result 1 > 0: New result	0
21 … 29	Result state	Toggle bit indicates that the bar code has not been read.	0.6	Bit	0 > 1: NOREAD 1 > 0: NOREAD	0
21 … 29	Waiting for acknowledgment	This signal represents the internal state of the control.	0.7	Bit	0: Base state 1: Control waiting for acknowledgment from the IO controller	=

Module no.	Input data	Description	Addr.	Data type	Value range	Initial value
21 … 29	Bar code data length	Data length of the actual bar code information. If the bar code information (bar code and, possibly, other items such as the check sum) fits in the selected module width, this value reflects the length of the transmitted data. A value larger than the module width indicates a loss of information caused by a module width which has been selected too small.	1	UN-SIGNED 8	0-48	0
21	Data	Bar code information with a length of consistently 4 bytes.	2..	4x UN-SIGNED 8	0-FFh	0
22	Data	Bar code information with a length of consistently 8 bytes.	2..	8x UN-SIGNED 8	0-FFh	0
23	Data	Bar code information with a length of consistently 12 bytes.	2..	12x UN-SIGNED 8	0-FFh	0
24	Data	Bar code information with a length of consistently 16 bytes.	2..	16x UN-SIGNED 8	0-FFh	0
25	Data	Bar code information with a length of consistently 20 bytes.	2..	20x UN-SIGNED 8	0-FFh	0
26	Data	Bar code information with a length of consistently 24 bytes.	2..	24x UN-SIGNED 8	0-FFh	0
27	Data	Bar code information with a length of consistently 28 bytes.	2..	28x UN-SIGNED 8	0-FFh	0
28	Data	Bar code information with a length of consistently 64 bytes.	2..	64x UN-SIGNED 8	0-FFh	0
29	Data	Bar code information with a length of consistently 128 bytes.	2..	128x UN-SIGNED 8	0-FFh	0

Input data

2 bytes consistently + 4..128 bytes of bar code information depending on the module

Output data

None

Comments

The remarks for module 20 – decoder state, apply in an analogous manner.

In addition, all bytes beginning with address 1 are reset to the initial value.

NOTICE
Shortening decoding results that are too long: If the bar code information (bar code possibly including supplementary information such as the check sum) does not fit in the selected module width, the decoding results are shortened. This shortening is either from the left or the right depending on the setting in module 30 – Data formatting. Shortening is indicated by the passed bar code data length.

8.8.3 Module 30 – Data formatting

PROFINET-IO module identifier

Module ID: 1030

Submodule ID: 1

Description

The module defines the output string for the case that the BCL 248i could not read a bar code. In addition, the initialization of the data fields and the definition of unused data ranges may be set.

Parameter

Tab. 8.16: Parameters for module 30

Parameter	Description	Addr.	Data type	Value range	Default
Text in the case of misreading	The parameter defines the output characters if no bar code could be read.	0	STRING 20 characters null terminated	1 … 20 bytes of ASCII characters	63 („?“)
Decoding result at reading gate start	The parameter defines the state of the data at the start of the reading gate.	20.5	Bit	0: Input data remain on the old value 1: Input data is reset to the initial value	0
Data alignment	The parameter defines the alignment of the data in the result field and thus also controls possible shortening of a decoding result that is too large.	21.0	Bit	0: Left-justified 1: Right-justified	0
Fill mode	The parameter defines the fill mode for the not assigned data ranges.	21.4 … 21.7	BitArea	0: No fill up 3: Fill up to the transmission length	3
Fill character	The parameter defines the character which is used for filling up the data ranges.	22	UNSIGNED8	0 … FFh	0

Parameter length

23 bytes

Input data

None

Output data

None

Remark

The *decoding result at reading gate start* parameter is only taken into account if the *Without ACK* mode is set (see chapter 8.7.1 "Module 10 – Activations").

NOTICE	
	The text for erroneous readings does not permit the use of ASCII characters that cannot be displayed (<0x20h).

8.8.4 Module 31 – Reading gate number

PROFINET-IO module identifier

Module ID: 1031

Submodule ID: 1

Description

The module defines input data for the communication of the number of reading gates since system start.

Parameter

None

Input data

Tab. 8.17: Input data for module 31

Input data	Description	Addr.	Data type	Value range	Initial value
Reading gate number	The BCL 248i transmits the current reading gate number. The reading gate number is initialized with the system start and is then incremented continuously. At 65535, an overflow occurs and the counter starts again from 0.	0 … 1	UNSIGNED16	0 … 65535	0

Input data length

2 byte consistent

Output data

None

8.8.5 Module 32 – Reading gate time

PROFINET-IO module identifier

Module ID: 1032

Submodule ID: 1

Description

This module returns the time between opening and closing of the last reading gate.

Parameter

None

Input data

Tab. 8.18: Input data for module 32

Input data	Description	Addr.	Data type	Value range	Initial value
Opening duration of the reading gate	Opening duration of the last reading gate in ms.	0 … 1	UNSIGNED16	0 … 65535 ms If the range is exceeded, the value remains at 65535	0 ms

Input data length

2 byte consistent

Output data

None

8.8.6 Module 33 – Code position

PROFINET-IO module identifier

Module ID: 1033

Submodule ID: 1

Description

The module defines input data for the communication of the relative bar code position in the laser beam.

Parameter

None

Input data

Tab. 8.19: Input data for module 33

Input data	Description	Addr.	Data type	Value range	Initial value
Code position	Relative position of the bar code in the scanner beam. The position is normalized to the zero position (middle position). Specified in 1/10 degrees.	0 … 1	SIGNED16	±450 [1/10 degrees]	0 [1/10 degrees]

Input data length

2 byte consistent

Output data

None

8.8.7 Module 34 – Reading reliability (equal scans)

PROFINET-IO module identifier

Module ID: 1034

Submodule ID: 1

Description

The module defines the input data for the communication of the calculated reading reliability. The value refers to the currently output bar code.

Parameter

None

Input data

Tab. 8.20: Input data for module 34

Input data	Description	Addr.	Data type	Value range	Initial value
Reading reliability (equal scans)	Calculated reading reliability for the transmitted bar code.	0 … 1	UNSIGNED16	0 … 65535	0

Input data length

2 byte consistent

Output data

None

8.8.8 Module 35 – Bar code length

PROFINET-IO module identifier

Module ID: 1035

Submodule ID: 1

Description

The module defines input data for the communication of the length of the currently output bar code.

Parameter

None

Input data

Tab. 8.21: Input data for module 35

Input data	Description	Addr.	Data type	Value range	Initial value
Bar code length	Length/duration of the currently output bar code, beginning with the code position specified in module 35 in 1/10 degrees.	0 … 1	UNSIGNED16	1 … 900 [1/10 degrees]	1 [1/10 degrees]

Input data length

2 byte consistent

Output data

None

8.8.9 Module 36 – Scans with information

PROFINET-IO module identifier

Module ID: 1036

Submodule ID: 1

Description

The module defines input data for the communication of the calculated number of scans which provided information contributing to the result of the bar code.

Parameter

None

Input data

Tab. 8.22: Input data for module 36

Input data	Description	Addr.	Data type	Value range	Initial value
Scans with information per bar code	See above	0 … 1	UNSIGNED16	0 ,,, 65535	0

Input data length

2 byte consistent

Output data

None

8.8.10 Module 37 – Decoding quality

PROFINET-IO module identifier

Module ID: 1037

Submodule ID: 1

Description

The module defines input data for the communication of the calculated decoding quality of the currently transmitted bar code.

Parameter

None

Input data

Tab. 8.23: Input data for module 37

Input data	Description	Addr.	Data type	Value range	Initial value
Decoding quality	Decoding quality of the transmitted bar code in %.	0	UNSIGNED8	0 … 100%	0 %

Input data length

1 byte consistent

Output data

None

8.8.11 Module 38 – Code direction

PROFINET-IO module identifier

Module ID: 1038

Submodule ID: 1

Description

The module defines input data for the communication of the detected code direction of the currently transmitted bar code.

Parameter

None

Input data

Tab. 8.24: Input data for module 38

Input data	Description	Addr.	Data type	Value range	Initial value
Code direction	Code direction of the transmitted bar code	0	UNSIGNED8	0: Normal 1: Inverted 2: Unknown	0

Input data length

1 byte

Output data

None

NOTICE	
	A decoding result of type "No Read" has as code direction the value 2 = unknown.

8.8.12 Module 39 – Number of digits

PROFINET-IO module identifier

Module ID: 1039

Submodule ID: 1

Description

The module defines input data for the communication of the number of digits of the currently transmitted bar code.

Parameter

None

Input data

Tab. 8.25: Input data for module 39

Input data	Description	Addr.	Data type	Value range	Initial value
Number of digits	Number of digits of the transmitted bar code	0	UNSIGNED8	0 … 48	0

Input data length

1 byte

Output data

None

8.8.13 Module 40 – Code type (symbology)

PROFINET-IO module identifier

Module ID: 1040

Submodule ID: 1

Description

The module defines input data for the communication of the code type of the currently transmitted bar code.

Parameter

None

Input data

Tab. 8.26: Input data for module 40

Input data	Description	Addr.	Data type	Value range	Initial value
Code type (symbology)	Code type of the transmitted bar code	0	UNSIGNED8	0: No code 1: 2/5 Interleaved 2: Code39 6: UPC, UPCE 7: EAN8, EAN13 8: Code128, EAN128 10: EAN Addendum 11: Codabar 12: Code93 13: GS1 DataBar Omnidirectional 14: GS1 DataBar Limited 15: GS1 DataBar Expanded	0

Input data length

1 byte

Output data

None

8.9 Data Processing

8.9.1 Module 50 – Characteristics filter

PROFINET-IO module identifier

Module ID: 1050

Submodule ID: 1

Description

Configuration of the characteristics filter.

This filter can be used to set how bar codes with identical content are handled and what criteria are to be taken into account in determining the likeness.

Parameter

Tab. 8.27: Parameters for module 50

Parameter	Description	Addr.	Data type	Value range	Default
Handling of identical bar code information	Determines how bar codes with the same content are to be managed.	0	UNSIGNED8	0: All bar codes are stored and output. 1: Only non-identical bar code contents are output.	1
Comparison parameter code type	If this criterion has been activated, the bar code type is used to determine whether the bar codes are identical.	1.0	Bit	0: Deactivated 1: Activated	1

Parameter	Description	Addr.	Data type	Value range	Default
Comparison parameter bar code content	If this criterion has been activated, the bar code content is used to determine whether the bar codes are identical.	1.1	Bit	0: Deactivated 1: Activated	1
Comparison parameter bar code direction	If this criterion has been activated, the bar code direction is used to determine whether the bar codes are identical.	1.2	Bit	0: Deactivated 1: Activated	1
Comparison parameter scan position	If this parameter is not equal to 0, the bar code position in the scanning beam is used to determine whether identical bar codes have already been decoded. In this case, a +/- bandwidth must be specified in 1/10 degrees, within which the same bar code is permitted to be in the scanning beam.	2 … 3	UNSIGNED16	0 … 450 [1/10 degrees]	0 [1/10 degrees]
Comparison parameter scanning time info	If this parameter is not equal to 0, the decoding time (time at which the bar code was decoded) is used to determine whether identical bar codes have already been detected. For this purpose, a time difference in milliseconds is specified. It ensures that identical bar codes can only occur within this time.	6 … 7	UNSIGNED16	0 … 65535 ms	0 ms

Parameter length

8 bytes

Input data

None

Output data

None

All comparison criteria are AND linked; this means all active comparisons must be fulfilled before the just-decoded bar code can be identified as already decoded and then deleted.

8.9.2 Module 51 – Data filtering

PROFINET-IO module identifier

Module ID: 1051

Submodule ID: 1

Description

Configuration of the data filter.

Parameter

Tab. 8.28: Parameters for module 51

Parameter	Description	Addr.	Data type	Value range	Default
Bar code filter string 1	Filter expression 1	0	STRING 30 characters null terminated	1 … 30 bytes of ASCII characters	\00

Parameter	Description	Addr.	Data type	Value range	Default
Bar code filter string 2	Filter expression 2	30	STRING 30 characters null terminated	1 … 30 bytes of ASCII characters	\00

Parameter length

60 bytes

Input data

None

Output data

None

Filter string

The filter string is used to define passthrough filters for bar codes.

Any number of '?' is permitted as placeholders for an arbitrary character at exactly this position. Also permitted are '*' as placeholders for a character sequence of arbitrary length, and an 'x' if the character at the respective position is to be deleted.

NOTICE
ASCII characters that cannot be displayed (<0x20h) must not be used.

8.10 Identifier

The following modules can be used to specify the segmentation process to be used when extracting identifiers from the bar code data.

When a module is configured, the associated segmentation process is activated. If none of the modules is configured, no segmentation takes place.

Therefore, the modules can only be used one at a time and not simultaneously.

NOTICE
When using one of the following modules, multiple results may occur within a reading gate. If there are multiple results, acknowledge mode must be used; data may otherwise be lost (see chapter 8.7.1 "Module 10 – Activations").

8.10.1 Module 52 – Segmentation acc. to the EAN process

PROFINET-IO module identifier

Module ID: 1052

Submodule ID: 1

Description

The module activates the segmentation according to the EAN process. The parameters specify the identifiers to be searched for and the output mode.

Parameter

Tab. 8.29: Parameters for module 52

Parameter	Description	Addr.	Data type	Value range	Default
Identifier list					

Parameter	Description	Addr.	Data type	Value range	Default
Identifier 1	The identifier string is used for the identifier list and the filtering according to the segmentation.	0	STRING 5 characters null terminated	1 … 5 bytes of ASCII characters	'*'
Identifier 2	See identifier 1	5	STRING 5 characters null terminated	1 … 5 bytes of ASCII characters	\0
Identifier 3	See identifier 1	10	STRING 5 characters null terminated	1 … 5 bytes of ASCII characters	\0
Identifier 4	See identifier 1	15	STRING 5 characters null terminated	1 … 5 bytes of ASCII characters	\0
Identifier 5	See identifier 1	20	STRING 5 characters null terminated	1 … 5 bytes of ASCII characters	\0
Identifier output					
Output with identifier	If this switch is not set, the output of the identifiers is suppressed. Only the data values that belong to the identifiers are displayed in this case.	25.0	Bit	0: Output of the identifiers is suppressed. 1: Identifiers are output.	1
Output delimiter	This delimiter, if not equal to 0, is inserted between the identifier and the associated data value in the output.	26	UNSIGNED8	0 … 127	0

Parameter length

27 bytes

Input data

None

Output data

None

Identifier string n (n = 1 … 5)

The identifier string defines both the identifier list for the segmentation and the passthrough filter for the subsequent filtering.

The string may contain wildcards. Any number of '?' is permitted as placeholders for an arbitrary character at exactly that defined position.

Also permitted are '*' as placeholders for a character sequence of arbitrary length, and an 'x' if the character at the respective position is to be deleted. There are a total of five identifier strings.

An identifier with less than 5 characters must be null terminated. However, if the identifier string consists of exactly 5 characters, it does not have to be terminated.

	NOTICE
	ASCII characters that cannot be displayed (<0x20h) must not be used in the identifier strings.

8.10.2 Module 53 – Segmentation via fixed positions

PROFINET-IO module identifier

Module ID: 1053

Submodule ID: 1

Description

The module activates the segmentation via fixed positions. The parameters specify the identifiers to be searched for, the output mode, and the positions.

Parameter

Tab. 8.30: Parameters for module 53

Parameter	Description	Addr.	Data type	Value range	Default
Identifier list					
Identifier 1	The identifier string is used for the identifier list and the filtering according to the segmentation.	0	STRING 5 characters null terminated	1 … 5 bytes of ASCII characters	'*'
Identifier 2	See identifier 1	5	STRING 5 characters null terminated	1 … 5 bytes of ASCII characters	\0
Identifier 3	See identifier 1	10	STRING 5 characters null terminated	1 … 5 bytes of ASCII characters	\0
Identifier 4	See identifier 1	15	STRING 5 characters null terminated	1 … 5 bytes of ASCII characters	\0
Identifier 5	See identifier 1	20	STRING 5 characters null terminated	1 … 5 bytes of ASCII characters	\0
Identifier output					
Output with identifier	If this switch is not set, the output of the identifiers is suppressed. Only the data values that belong to the identifiers are displayed in this case.	25.0	Bit	0: Output of the identifiers is suppressed. 1: Identifiers are output.	1
Output delimiter	This delimiter, if not equal to 0, is inserted between the identifier and the associated data value in the output.	26	UNSIGNED8	0 … 127	0
Fixed positions					
Start position of the 1st identifier	Specifies the position of the first character of the first identifier in the data string of the bar code. The first character in the bar code has position 1. If the parameter is = 0, it is deactivated.	27	UNSIGNED8	0 … 127	0

Parameter	Description	Addr.	Data type	Value range	Default
Start position of the 1st data value	Specifies the position of the first character of the first data value in the data string of the bar code. The first character in the bar code has position 1. If the parameter is = 0, it is deactivated.	28	UNSIGNED8	0 … 127	0
Start position of the 2nd identi-fier	Specifies the position of the first character of the second identifier in the data string of the bar code. The first character in the bar code has position 1. If the parameter is = 0, it is deactivated.	29	UNSIGNED8	0 … 127	0
Start position of the 2nd data value	Specifies the position of the first character of the second data value in the data string of the bar code. The first character in the bar code has position 1. If the param-eter is = 0, it is deactivated.	30	UNSIGNED8	0 … 127	0
Start position of the 3rd identifier	Specifies the position of the first character of the third identifier in the data string of the bar code. The first character in the bar code has position 1. If the parameter is = 0, it is deactivated.	31	UNSIGNED8	0 … 127	0
Start position of the 3rd data value	Specifies the position of the first character of the third data value in the data string of the bar code. The first character in the bar code has position 1. If the parameter is = 0, it is deactivated.	32	UNSIGNED8	0 … 127	0
Start position of the 4th identifier	Specifies the position of the first character of the fourth identifier in the data string of the bar code. The first character in the bar code has position 1. If the parameter is = 0, it is deactivated.	33	UNSIGNED8	0 … 127	0
Start position of the 4th data value	Specifies the position of the first character of the fourth data value in the data string of the bar code. The first character in the bar code has position 1. If the parameter is = 0, it is deactivated.	34	UNSIGNED8	0 … 127	0
Start position of the 5th identifier	Specifies the position of the first character of the fifth identifier in the data string of the bar code. The first character in the bar code has position 1. If the parameter is = 0, it is deactivated.	35	UNSIGNED8	0 … 127	0
Start position of the 5th data value	Specifies the position of the first character of the fifth data value in the data string of the bar code. The first character in the bar code has position 1. If the parameter is = 0, it is deactivated.	36	UNSIGNED8	0 … 127	0

Parameter length

37 bytes

Input data

None

Output data

None

Identifier string n (n = 1 … 5)

The identifier string defines both the identifier list for the segmentation and the passthrough filter for the subsequent filtering.

The string may contain wildcards. Any number of '?' is permitted as placeholders for an arbitrary character at exactly that defined position.

Also permitted are '*' as placeholders for a character sequence of arbitrary length, and an 'x' if the character at the respective position is to be deleted. There are a total of five identifier strings.

An identifier with less than 5 characters must be null terminated. However, if the identifier string consists of exactly 5 characters, it does not have to be terminated.

	NOTICE
	ASCII characters that cannot be displayed (<0x20h) must not be used in the identifier strings.

8.10.3 Module 54 – Segmentation according to identifier and separator

PROFINET-IO module identifier

Module ID: 1054

Submodule ID: 1

Description

This module activates the segmentation according to identifier and separator. The parameters specify the identifiers to be searched for, the output mode, and the parameters for the identifier/separator algorithm.

Parameter

Tab. 8.31: Parameters for module 54

Parameter	Description	Addr.	Data type	Value range	Default
Identifier list					
Identifier 1	The identifier string is used for the identifier list and the filtering according to the segmentation.	0	STRING 5 characters null terminated	1 … 5 bytes of ASCII characters	'*'
Identifier 2	See identifier 1	5	STRING 5 characters null terminated	1 … 5 bytes of ASCII characters	\0
Identifier 3	See identifier 1	10	STRING 5 characters null terminated	1 … 5 bytes of ASCII characters	\0

Parameter	Description	Addr.	Data type	Value range	Default
Identifier 4	See identifier 1	15	STRING 5 characters null terminated	1 … 5 bytes of ASCII characters	\0
Identifier 5	See identifier 1	20	STRING 5 characters null terminated	1 … 5 bytes of ASCII characters	\0
Identifier output					
Output with identifier	If this switch is not set, the output of the identifiers is suppressed. Only the data values that belong to the identifiers are displayed in this case.	25.0	Bit	0: Output of the identifiers is suppressed. 1: Identifiers are output.	1
Output delimiter	This delimiter, if not equal to 0, is inserted between the identifier and the associated data value in the output.	26	UNSIGNED8	0 … 127	0
Segmentation acc. to identifier and separator					
Identifier length	Fixed length of all identifiers in the segmentation process. After this length, the text of the identifier ends and the associated data value starts. The end of the data value is determined by the separator.	27	UNSIGNED8	0 … 256	0
Delimiter in the identifier /separator process	The separator terminates the data value that follows its identifier directly after the identifier length. After the separator, the next identifier starts.	28	UNSIGNED8	0 … 127	0

Parameter length

29 bytes

Input data

None

Output data

None

Identifier string n (n = 1 … 5)

The identifier string defines both the identifier list for the segmentation and the passthrough filter for the subsequent filtering.

The string may contain wildcards. Any number of '?' is permitted as placeholders for an arbitrary character at exactly that defined position.

Also permitted are '*' as placeholders for a character sequence of arbitrary length, and an 'x' if the character at the respective position is to be deleted. There are a total of five identifier strings.

An identifier with less than 5 characters must be null terminated. However, if the identifier string consists of exactly 5 characters, it does not have to be null terminated.

NOTICE	
	ASCII characters that cannot be displayed (<0x20h) must not be used in the identifier strings.

8.10.4 Module 55 – String handling parameters

PROFINET-IO module identifier

Module ID: 1055

Submodule ID: 1

Description

This module is used to configure placeholder characters for the bar code segmentation, filtering, termination, and reference code processing.

Parameter

Tab. 8.32: Parameters for module 55

Parameter	Description	Addr.	Data type	Value range	Default
Wildcard character	This parameter is similar to the "don't care character" parameter. The difference between this and the "don't care character" is that all subsequent characters, and not only one character at a certain position, are disregarded until a character pattern is found in the string that follows the wildcard character pattern. This character has the same behavior as the wildcard character for the DIR command in the command line interpreter under Windows.	0	UNSIGNED8	32 … 126	'*'
Don't care character	Placeholder character. Characters at the position of the placeholder character are not taken into account in a comparison. This permits certain areas to be masked.	1	UNSIGNED8	32 … 126	'?'
Delete character	Delete character for bar code and identifier filtering (characters at the position of the delete character are deleted in a comparison. This permits certain areas to be deleted).	2	UNSIGNED8	32 … 126	'x'

Parameter length

3 bytes

Input data

None

Output data

None

8.11 Device functions

8.11.1 Module 60 – Device status

PROFINET-IO module identifier

Module ID: 1060

Submodule ID: 1

Description

The module contains the display of the device status as well as control bits for triggering a reset or putting the device into standby mode.

Parameter

None

Input data

Tab. 8.33: Input data for module 60

Input data	Description	Addr.	Data type	Value range	Initial value
Device status	This byte represents the device status.	0	UNSIGNED8	1: Initialization 10: Standby 11: Service 12: Diagnosis 13: Parameter Enabled 15: Device is ready 0x80: Error 0x81: Warning	0

Input data length

1 byte

Output data

Tab. 8.34: Output data for module 60

Output data	Description	Addr.	Data type	Value range	Initial value
System reset	The control bit triggers a system reset if the level changes from 0 to 1. Analogous to command H, activation of this bit triggers a restart of all electronics, incl. a restart of the PROFINET-IO stack.	0.6	Bit	0: Run 0 > 1: Reset	0
Standby	Activates the standby function	0.7	Bit	0: Standby off 1: Standby on	0

Output data length

1 byte

NOTICE

When resetting the data (see chapter 8.7.1 "Module 10 – Activations") the input data of this module is not deleted.

8.11.2 Module 61 – Laser control

PROFINET-IO module identifier

Module ID: 1061

Submodule ID: 1

Description

The module defines the switch-on and switch-off position of the laser.

Parameter

Tab. 8.35: Parameters for module 61

Parameter	Description	Addr.	Data type	Value range	Default
Laser start position	This parameter defines the switch-on position of the laser in 1/10° increments within the visible range of the laser. The center of the reading field corresponds to the 0° position.	0 … 1	UNSIGNED16	-450 … +450 [1/10 degrees]	-450 [1/10 degrees]
Laser stop position	This parameter defines the switch-off position of the laser in 1/10° increments within the visible range of the laser.	2 … 3	UNSIGNED16	-450 … +450 [1/10 degrees]	+450 [1/10 degrees]

Parameter length

4 bytes

Input data

None

Output data

None

8.11.3 Module 63 – Alignment

PROFINET-IO module identifier

Module ID: 1063

Submodule ID: 1

Description

The module defines input and output data for the alignment mode of the BCL 248i. The alignment mode is used for easy alignment of the BCL 248i with the bar code. Using the transmitted decoding quality as a percentage, the optimum alignment can be easily selected. This module should not be used in connection with module 81 (AutoReflAct) as this may cause malfunctions.

Parameter

None

Input data

Tab. 8.36: Input data for module 63

Input data	Description	Addr.	Data type	Value range	Initial value
Decoding quality	Transmits the current decoding quality of the bar code located in the scanning beam.	0	Byte	0 … 100%	0 %

Input data length:

1 byte

Output data

Tab. 8.37: Output data for module 63

Output data	Description	Addr.	Data type	Value range	Initial value
Alignment mode	Signal activates and deactivates the alignment mode for optimum alignment of the BCL 248i with the bar code.	0.0	Bit	0 > 1: On 1 > 0: Off	0

Output data length:

1 byte

8.12 Switching inputs/outputs SWIO 1/2

These modules define the mode of operation of the two digital switching inputs and outputs (I/Os). They are separated into individual modules for configuring the individual I/Os and a shared module for signaling the status and controlling all I/Os.

8.12.1 Parameters for operating as an output

Start-up delay

With this setting, the output pulse can be delayed by the specified time (in ms).

Switch-on time

Defines the switch-on time period for the switching input. Any activated switch-off function then no longer has any function.

A value of 0 causes the output to be set statically; this means that the selected input function(s) activates the output, and the selected switch-off function(s) deactivates it again.

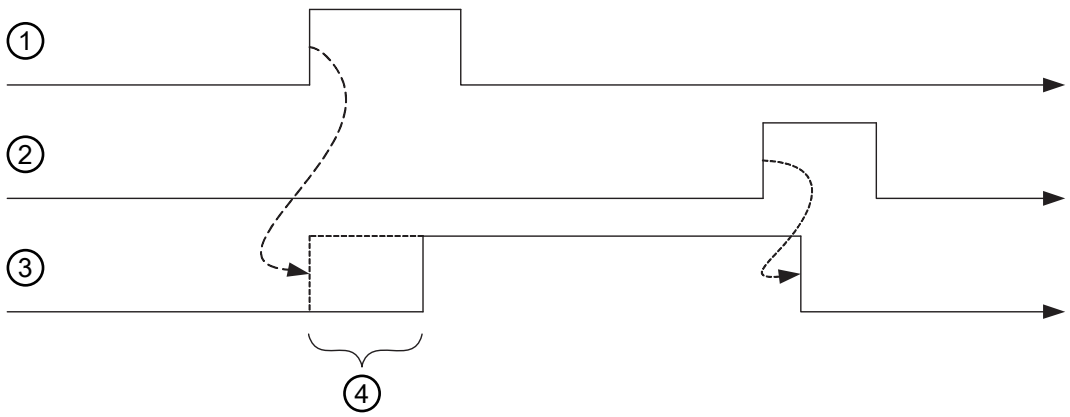

1 Switch-on signal
2 Switch-off signal
3 Output
4 Start-up delay

Fig. 8.5: Example 1: Start-up delay > 0 and switch-on time = 0

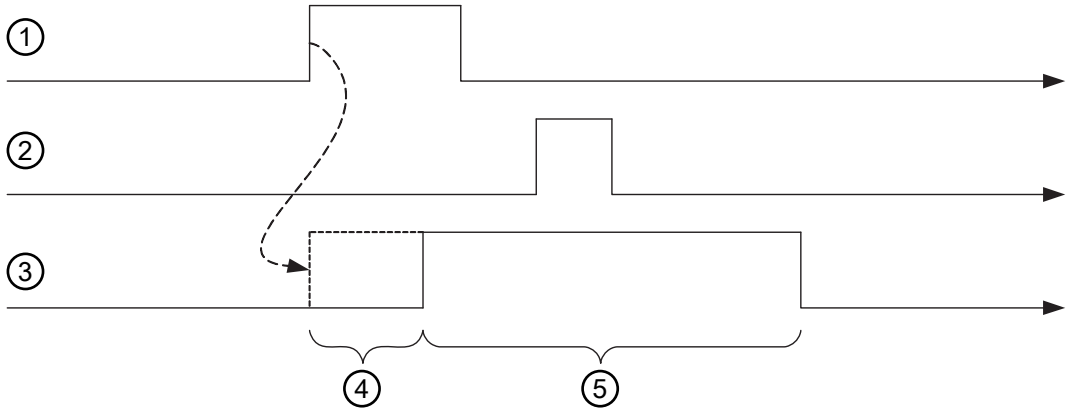

1	Switch-on signal	4	Start-up delay
2	Switch-off signal	5	Switch-on time
3	Output		

Fig. 8.6: Example 2: Start-up delay > 0 and switch-on time > 0

In example 2, the activation duration of the output is only dependent on the selected switch-on time; the switch-off signal has no effect.

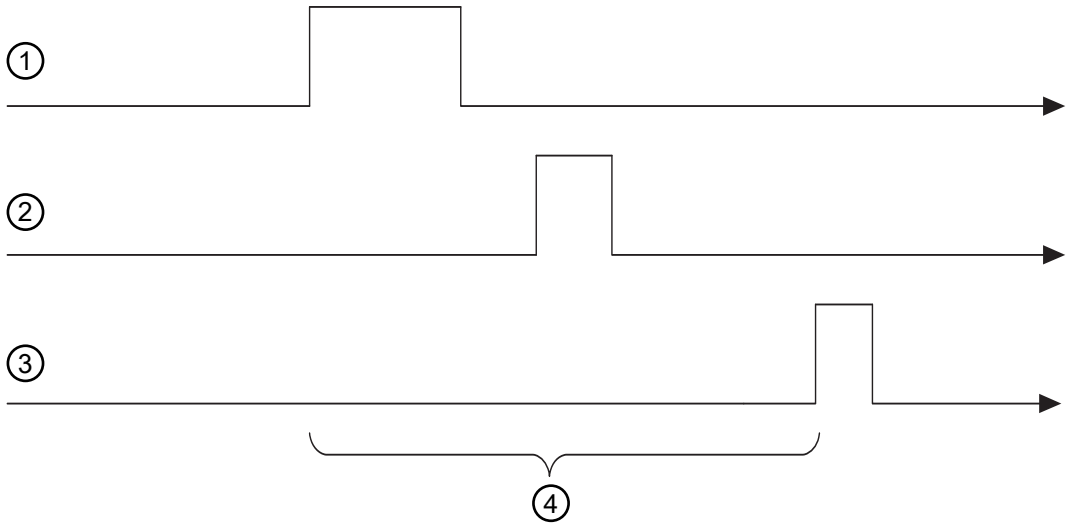

1	Switch-on signal	4	Start-up delay
2	Switch-off signal		
3	Output		

Fig. 8.7: Example 3: Start-up delay > 0 Switch-off signal prior to lapsing of the start-up delay

If the output is again deactivated via the switch-off signal before the start-up delay lapses, only a brief pulse appears at the output following the start-up delay.

Comparison functionality

If, for example, the switching output is to be activated after four invalid read results, the comparative value is set to 4 and the switch-on function is configured to "invalid read result".

The comparison mode parameter can be used to define whether the switching output is activated only once in the case that the event counter and comparative value fulfill the "parity" condition, or if it is activated multiple times, on each successive event after the "parity" condition is met.

The event counter can always be reset with the I/O data in the I/O status and control module; furthermore, the reset mode parameter enables automatic resetting upon reaching the comparative value. Automatic resetting upon reaching the comparative value always results in the switching output being switched once independent of the comparison mode parameter.

The standard switch-off function at reading gate start is rather unsuited for this module since it causes the event counter to be reset on each reading gate start. Suitable as switch-off function for this example is the valid read result function; otherwise, all switch-off functions are deactivated.

8.12.2 Parameters for operating as an input

Debounce time

Parameter for setting the software debounce time for the switching input. The definition of a debounce time extends the signal transition time accordingly.

If the value of this parameter = 0, no debouncing takes place; otherwise, the configured value represents the duration in milliseconds for which the input signal must be present and stable.

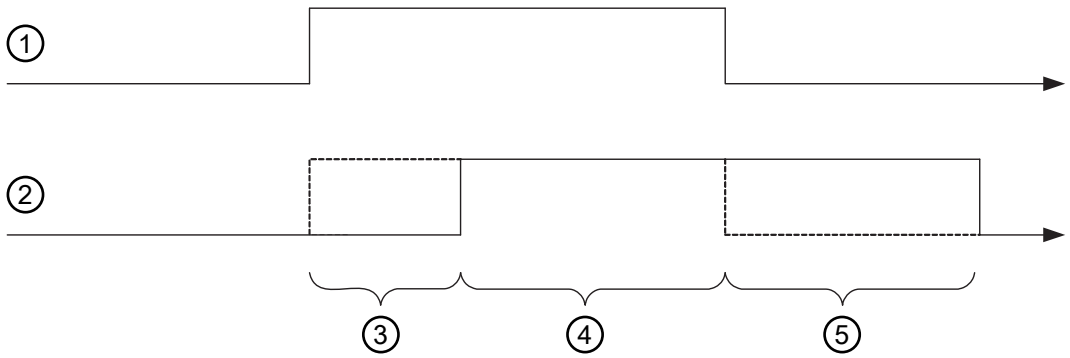

1	Input signal	3	Start-up delay td_on
2	Output signal	4	Switch-on time ton
		5	Switch-off delay td_off

Fig. 8.8: Start-up behavior in input mode

Start-up delay td_on

If the value of this parameter = 0, no start-up delay occurs for the activation of the input function; otherwise, the configured value represents the time in milliseconds by which the input signal is delayed.

Switch-on time ton

This parameter specifies the min. activation duration for the selected input function in milliseconds.

The actual activation duration is calculated from the switch-on time as well as the switch-off delay.

Switch-off delay td_off

This parameter specifies the duration of the switch-off delay in milliseconds.

8.12.3 Switch-on and switch-off functions for operation as an output

The following options are available for switch-on and switch-off functions in the "output" operating mode:

Tab. 8.38: Switch-on/switch-off functions

Name	Value	Comment
No function	0	No functionality
Reading gate start	1	
Reading gate end	2	
Positive reference code comparison 1	3	
Negative reference code comparison 1	4	
Valid read result	5	
Invalid read result	6	
Device ready	7	The device is in a ready state.
Device not ready	8	The device is not yet ready (motor and laser are being activated).
Data transmission active	9	
Data transmission not active	10	
AutoControl good quality	13	
AutoControl bad quality	14	
Reflector detected	15	
Reflector not detected	16	
External event, pos. edge	17	In the PROFINET case, the external event is generated with the aid of module 74 – "I/O status and control", see chapter 8.12.7 "Module 74 – SWIO status and control".
External event, neg. edge	18	See above
Device active	19	Decoding is currently being performed.
Device in standby mode	20	Motor and laser inactive.
No device error	21	An error was detected.
Device error	22	Device is in an error state.
Positive reference code comparison 2	23	
Negative reference code comparison 2	24	

8.12.4 Input functions for operation as an input

Tab. 8.39: Input functions

Name	Value	Comment
No function	0	No functionality
Reading gate activation	1	
Reading gate deactivation only	2	
Reading gate activation only	3	
Reference bar code teach-in	4	
Start/stop AutoConfiguration mode	5	

8.12.5 Module 70 – Switching input SWI1

PROFINET-IO module identifier

Module ID: 1070

Submodule ID: 1

NOTICE	
	Module 70 functions only as a switching input.

Parameter

Tab. 8.40: Parameters for module 70

Parameter	Description	Addr.	Data type	Value range	Default
Inversion	The parameter defines the logic of the incident signal. In case of an inversion, an external HIGH level is interpreted internally as a LOW level.	13.1	Bit	0: Normal 1: Inverted	0
Reserved	Free	13.2 … 13.7			
Debounce time	The parameter defines a debounce time in ms which is implemented in software.	14	UNSIGNED16	0 … 1000 ms	5 ms
Start-up delay	The parameter influences the time behavior in ms during switch-on.	16	UNSIGNED16	0 … 65535 ms	0 ms
Minimum switch-on time	The parameter defines a minimum time period in ms before the signal is reset.	18	UNSIGNED16	0 … 65535 ms	0 ms
Switch-off delay	The parameter defines a time delay in ms for the signal during switch-off.	20	UNSIGNED16	0 … 65535 ms	0 ms
Input function	The parameter specifies the function which is to be activated or deactivated by a status change in the signal.	22	UNSIGNED8	see chapter 8.12.4 "Input functions for operation as an input"	1

Parameter length

23 bytes

Input data

None

Output data

None

Comment

The bias level also defines whether the output is low-active (0) or high-active (1).

Switching on an output means switching to the active state; switching off, on the other hand, results in switching to the inactive or idle state.

8.12.6 Module 71 – Switching output SWO2

PROFINET-IO module identifier

Module ID: 1071

Submodule ID: 1

NOTICE
Module 71 functions only as a switching output.

Parameter

Tab. 8.41: Parameters for module 71

Parameter	Description	Addr.	Data type	Value range	Default
Bias level	The parameter defines the bias level of the switching output and, thus, simultaneously whether the output is low-active (0) or high-active (1).	0.1	Bit	0: LOW (0 V) 1: HIGH (+Ub)	0
Reserved	Free	0.2 … 0.7			
Start-up delay	With this parameter, the output pulse may be delayed by a set time period in ms	1	UNSIGNED16	0 … 65535 ms	0 ms
Switch-on time	The parameter defines the switch-on time period for the switching output in ms. If the value is 0, the signal is static.	3	UNSIGNED16	0 … 1300 ms	400 ms
Switch-on function 1	This parameter specifies an event which can set the switching output.	5	UNSIGNED8	see chapter 8.12.3 "Switch-on and switch-off functions for operation as an output"	5
Switch-on function 2	This parameter specifies an event which can set the switching output. Switch-on function 1 and switch-on function 2 are OR linked.	6	UNSIGNED8	see chapter 8.12.3 "Switch-on and switch-off functions for operation as an output"	0
Switch-off function 1	This parameter specifies an event which can reset the switching output.	7	UNSIGNED8	see chapter 8.12.3 "Switch-on and switch-off functions for operation as an output"	1
Switch-off function 2	This parameter specifies an event which can reset the switching output. Switch-off function 1 and switch-off function 2 are OR linked.	8	UNSIGNED8	see chapter 8.12.3 "Switch-on and switch-off functions for operation as an output"	0

Parameter	Description	Addr.	Data type	Value range	Default
Comparative value (event counter)	If the number of activation events of the selected switch-on function reaches this comparative value, the switching output is activated. A de-activation event of the selected switch-off function resets the counter.	9	UN-SIGNED16	0 … 65535	0
Comparison mode (Event Counter)	Specifies whether the switching out-put switches only on parity (once) or also in the event of greater or equal to (multiple times) after the compara-tive value is reached.	11	UNSIGNED8	0: SWO switches once 1: SWO switches sev-eral times	0
Reset mode (Event Counter)	Specifies whether the counter (Event Counter) is reset only by the reset bit and the selected switch-off function, or if the counter should be automati-cally reset after the comparative value is reached.	12	UNSIGNED8	0: Reset bit and switch-off function 1: Compara-tive value reached	0

Parameter length

23 bytes

Input data

None

Output data

None

Comment

The bias level also defines whether the output is low-active (0) or high-active (1).

Switching on an I/O configured as an output means switching to the active state; switching off, on the other hand, results in switching to the inactive or idle state.

8.12.7 Module 74 – SWIO status and control

PROFINET-IO module identifier

Module ID: 1074

Submodule ID: 1

Description

Module for handling switching input and switching output signals.

Parameter

None

Input data

Tab. 8.42: Input data for module 74

Input data	Description	Addr.	Data type	Value range	Initial value
State 1	Signal state of the switching in-put 1	0.0	Bit	0, 1	0
State 2	Signal state of the switching out-put 2	0.1	Bit	0, 1	0

Input data	Description	Addr.	Data type	Value range	Initial value
	Reserved	1.0	Bit		
	Reserved	1.1	Bit		
Comparison state switching output 2 (event counter)	Indicates whether the event counter has exceeded the set comparative value. The bit is reset to the init. value by resetting the event counter.	1.2	Bit	0: Not exceeded 1: Exceeded	0
Comparison state toggle bit of switching output 2 (event counter)	If "SWO switches several times" was configured as comparison mode, this bit is toggled each time the event counter is exceeded. The bit is reset to the init. value by resetting the event counter.	1.3	Bit	0 > 1: Event counter exceeded 1 > 0: Event counter exceeded again	0

Input data length:

2 bytes

Output data

Tab. 8.43: Output data for module 74

Output data	Description	Addr.	Data type	Value range	Initial value
	Reserved	0.0	Bit		
Switching output 2	Sets the state of switching output 2	0.1	Bit	0: Switching output 0 1: Switching output 1	0
Reset event counter switching output 2	Sets the event counter of the activation function (AF) for switching output 2 back to zero.	0.5	Bit	0 > 1: Perform reset 1 > 0: No function	
	Reserved	1	Byte		

Output data length:

2 bytes

8.13 Data output

8.13.1 Module 80 – Sorting

PROFINET-IO module identifier

Module ID: 1080

Submodule ID: 1

Description

Module to support the sorting of the output data.

Parameter

Tab. 8.44: Parameters for module 80

Parameter	Description	Addr.	Data type	Value range	Default
Sort criterion 1	Specifies the criterion according to which sorting takes place.	0.0 … 0.6	BitArea	0: No sorting 1: Sorting according to scan number 2: Sorting according to position in the scanning beam 4: Sorting according to the decoding quality 5: Sorting according to the bar code length 6: Sorting according to the code type number 7: Sorting according to the decoding direction 8: Sorting according to the bar code content 9: Sorting according to time 10: Sorting according to scanning duration 11: Sorting according to the code list (in which the enabled bar codes are listed) 12: Sorting according to the identifier list	0
Sort direction 1	Specifies the sorting direction.	0.7	Bit	0: In ascending order 1: In descending order	0
Sort criterion 2	Specifies the criterion according to which sorting takes place.	1.0 … 1.6	BitArea	See sorting criterion 1	0
Sort direction 2	Specifies the sorting direction.	1.7	Bit	See sorting direction 1	0
Sort criterion 3	Specifies the criterion according to which sorting takes place.	2.0 … 2.6	BitArea	See sorting criterion 1	0
Sort direction 3	Specifies the sorting direction.	2.7	Bit	See sorting direction 1	0

Parameter length

3 bytes

Input data

None

Output data

None

8.14 Reference code comparison

The following modules can be used to support reference code comparison.

The reference code function compares the currently decoded read results with one or more stored comparison patterns. The function is split into two comparison units which can be configured independently of each other.

8.14.1 Module 81 – Reference code comparator 1

PROFINET-IO module identifier

Module ID: 1081

Submodule ID: 1

Description

The module defines the mode of operation of reference code comparator 1.

Parameter

Tab. 8.45: Parameters for module 81

Parameter	Description	Addr.	Data type	Value range	Default
Output function after reference bar code comparison	This parameter specifies the associated output linkage after a reference bar code comparison.	0	UNSIGNED8	0: No function 1: Comparison function 1 2: Comparison function 2 3: Comparison function 1 AND 2 4: Comparison function 1 OR 2	1
Linking logic for reference code output signal	This parameter specifies the linking logic for the reference code output signal.	1	UNSIGNED8	0: Length and type and ASCII 1: Length and (type or ASCII) 2: (Length or type) and ASCII 3: Length or type or ASCII	0
Output for reference code comparison	This parameter specifies whether a bar code length comparison should be carried out.	2	UNSIGNED8	0: Length ignored 1: Comp. o.k., if length unequal 2: Comp. o.k., if length equal	2
Bar code type comparison	This parameter specifies whether a bar code type comparison should be carried out	3	UNSIGNED8	0: Type ignored 1: Comp. o. k., if types unequal 2: Comp. o. k., if types equal	2

Parameter	Description	Addr.	Data type	Value range	Default
Reference code ASCII comparison	This parameter specifies how the ASCII comparison should be carried out.	4	UNSIGNED8	0: No comparison 1: Bar code not identical to RC 2: Bar code identical to RC 3: Bar code greater than RC 4: Bar code greater than or equal to RC 5: Bar code less than RC 6: Bar code less than or equal to RC 7: RC 1 less than or equal to bar code less than or equal to RC 2 8: Bar code less than or equal to RC 1 or bar code greater than RC 2	2
Reference code comparison mode	This parameter determines how and which reference bar codes (RC) are to be used for the bar code comparison.	5	UNSIGNED8	0: Only the first RC is used for the comparison. 1: Only the second RC is used for the comparison. 2: RC 1 and 2 are used for the comparison. Both conditions for RC 1 and 2 must be satisfied for a positive comparison. 3: RC 1 and 2 are used for the comparison. One of the two conditions for reference bar codes 1 and 2 must be satisfied.	0
Bar code comparison mode	This parameter specifies which decoded bar codes are to be used for the reference bar code comparison.	6	UNSIGNED8	0: Only the first bar code is used for the comparison. 1: Only the second bar code is used for the comparison. 2: All bar codes are used for the comparison. All comparisons must be successful. 3: All bar codes are used for the comparison. One comparison must be successful.	3

Parameter	Description	Addr.	Data type	Value range	Default
Reference code completeness comparison	If this parameter is set, the basic condition for a positive reference code comparison is that all mandatory bar codes that are to be read within a reading gate were actually read. If this condition is not satisfied, no positive reference code comparison is achieved.	7.0	Bit	0: Completeness comparison switched off. 1: Completeness comparison switched on.	0

Parameter length

8 bytes

Input data

None

Output data

None

8.14.2 Module 82 – Reference code comparator 2

PROFINET-IO module identifier

Module ID: 1082

Submodule ID: 1

Description

The module defines the mode of operation of reference code comparator 2.

Parameter

Tab. 8.46: Parameters for module 82

Parameter	Description	Addr.	Data type	Value range	Default
Output function after reference bar code comparison	This parameter specifies the associated output linkage after a reference bar code comparison.	0	UNSIGNED8	0: No function 1: Comparison function 1 2: Comparison function 2 3: Comparison function 1 AND 2 4: Comparison function 1 OR 2	1
Linking logic for reference code output signal	This parameter specifies the linking logic for the reference code output signal.	1	UNSIGNED8	0: Length and type and ASCII 1: Length and (type or ASCII) 2: (Length or type) and ASCII 3: Length or type or ASCII	0
Output for reference code comparison	This parameter specifies whether a bar code length comparison should be carried out.	2	UNSIGNED8	0: Length ignored 1: Comp. o.k., if length unequal 2: Comp. o.k., if length equal	2

Parameter	Description	Addr.	Data type	Value range	Default
Bar code type comparison	This parameter specifies whether a bar code type comparison should be carried out	3	UNSIGNED8	0: Type ignored 1: Comp. o. k., if types unequal 2: Comp. o. k., if types equal	2
Reference code ASCII comparison	This parameter specifies how the ASCII comparison should be carried out.	4	UNSIGNED8	0: No comparison 1: Bar code not identical to RC 2: Bar code identical to RC 3: Bar code greater than RC 4: Bar code greater than or equal to RC 5: Bar code less than RC 6: Bar code less than or equal to RC 7: RC 1 less than or equal to bar code less than or equal to RC 2 8: Bar code less than or equal to RC 1 or bar code greater than RC 2	2
Reference code comparison mode	This parameter determines how and which reference bar codes (RC) are to be used for the bar code comparison.	5	UNSIGNED8	0: Only the first RC is used for the comparison. 1: Only the second RC is used for the comparison. 2: RC 1 and 2 are used for the comparison. Both conditions for RC 1 and 2 must be satisfied for a positive comparison. 3: RC 1 and 2 are used for the comparison. One of the two conditions for reference bar codes 1 and 2 must be satisfied.	0
Bar code comparison mode	This parameter specifies which decoded bar codes are to be used for the reference bar code comparison.	6	UNSIGNED8	0: Only the first bar code is used for the comparison. 1: Only the second bar code is used for the comparison. 2: All bar codes are used for the comparison. All comparisons must be successful. 3: All bar codes are used for the comparison. One comparison must be successful.	3

Parameter	Description	Addr.	Data type	Value range	Default
Reference code completeness comparison	If this parameter is set, the basic condition for a positive reference code comparison is that all mandatory bar codes that are to be read within a reading gate were actually read. If this condition is not satisfied, no positive reference code comparison is achieved.	7.0	Bit	0: Completeness comparison switched off. 1: Completeness comparison switched on.	0

Parameter length

8 bytes

Input data

None

Output data

None

8.14.3 Module 83 – Reference code comparison pattern 1

PROFINET-IO module identifier

Module ID: 1083

Submodule ID: 1

Description

This module can be used to define the 1st comparison pattern

Parameter

Parameter	Description	Addr.	Data type	Value range	Default
Code type comparison pattern 1	Specifies the type of the reference bar code.	0	UNSIGNED8	0: No code 1: 2/5 Interleaved 2: Code39 3: Code32 6: UPC, UPCE 7: EAN8, EAN13 8: Code128 10: EAN Addendum 11: Codabar 12: Code93 13: GS1 DataBar Omnidirectional 14: GS1 DataBar Limited 15: GS1 DataBar Omnidirectional Expanded	0

Parameter	Description	Addr.	Data type	Value range	Default
Comparison pattern 1	Parameter string describing the content of the reference bar code. Note: You can also use the two placeholder characters that are stored in the "Wildcard character" and "Don't care character" parameters. If the string is empty, no comparison takes place. If the most recently stored character is the wildcard character, the comparison is only carried out up to the character before this wildcard character. In this way it is possible to switch off a comparison according to bar code length.	1	STRING 30 characters null terminated	1 … 30 bytes of ASCII characters	\00

Parameter length

31 bytes

Input data

None

Output data

None

	NOTICE
	The defined comparison pattern affects both reference code comparators (module 81 – reference code comparator 1 and module 82 – reference code comparator 2). ASCII characters that cannot be displayed (<0x20h) must not be used in the comparison pattern.

8.14.4 Module 84 – Reference code comparison pattern 2

PROFINET-IO module identifier

Module ID: 1084

Submodule ID: 1

Description

This module can be used to define the 2nd comparison pattern

Parameter

Parameter	Description	Addr.	Data type	Value range	Default
Code type comparison pattern 1	Specifies the type of the reference bar code.	0	UNSIGNED8	0: No code 1: 2/5 Interleaved 2: Code39 3: Code32 6: UPC, UPCE 7: EAN8, EAN13 8: Code128 10: EAN Addendum 11: Codabar 12: Code93 13: GS1 DataBar Omnidirectional 14: GS1 DataBar Limited 15: GS1 DataBar Omnidirectional Expanded	0
Comparison pattern 1	Parameter string describing the content of the reference bar code. Note: You can also use the two placeholder characters that are stored in the "Wildcard character" and "Don't care character" parameters. If the string is empty, no comparison takes place. If the most recently stored character is the wildcard character, the comparison is only carried out up to the character before this wildcard character. In this way it is possible to switch off a comparison according to bar code length.	1	STRING 30 characters null terminated	1 … 30 bytes of ASCII characters	\00

Parameter length

31 bytes

Input data

None

Output data

None

	NOTICE
	The defined comparison pattern affects both reference code comparators (module 81 – reference code comparator 1 and module 82 – reference code comparator 2). ASCII characters that cannot be displayed (<0x20h) must not be used in the comparison pattern.

8.15 Special functions

8.15.1 Module 90 – Status and control

PROFINET-IO module identifier

Module ID: 1090

Submodule ID: 1

Description

This module supplies various BCL 248i status information to the PROFINET-IO master. Various functions of the BCL 248i can be controlled via the master's output data.

Parameter

None

Input data

Tab. 8.47: Input data for module 90

Input data	Description	Addr.	Data type	Value range	Initial value
Reserved	Free	0.0	Bit		
AutoReflAct state	Signal state of the *AutoReflAct* module	0.1	Bit	0: Reflector is recognized 1: Reflector is hidden	1
AutoControl result	Indicates whether the result of the *AutoControl* function was a successful or unsuccessful reading.	0.2	Bit	0: Quality good 1: Quality bad	0
Reserved	Free	0.3	Bit		
RefCode comparison state 1	The signal indicates whether the decoded bar code corresponds to the reference code with regard to the comparison criteria as defined in the comparison function 1. If it matches, the value 1 is output.	0.4 … 0.5	Bit	0: Not equal 1: Equal 2: Unknown	2
RefCode comparison state 2	The signal indicates whether the decoded bar code corresponds to the reference code with regard to the comparison criteria as defined in the comparison function 2. If it matches, the value 1 is output.	0.6 … 0.7	Bit	0: Not equal 1: Equal 2: Unknown	2

Input data length:

1 byte

Output data

None

8.15.2 Module 91 – AutoReflAct (automatic reflector activation)

PROFINET-IO module identifier

Module ID: 1091

Submodule ID: 1

Description

The module defines the mode of operation of the diffuse laser sensor for controlling the reading gate.

The *autoReflAct* function uses the scanning beam to simulate a photoelectric sensor and thus permits an activation without additional sensors. This is achieved by directing the scanner with reduced scanning beam towards a reflector mounted behind the conveyor path. As long as the scanner is targeted at the reflector, the reading gate remains closed. If, however, the reflector is blocked by an object such as a container with a bar code label, the scanner activates the read procedure, and the label on the container is read. When the path from the scanner to the reflector has cleared, the read procedure has completed and the scanning beam is reduced and again directed onto the reflector. The reading gate is closed.

Parameter

Tab. 8.48: Parameters for module 91

Parameter	Description	Addr.	Data type	Value range	Default
Mode	This parameter activates the function of the diffuse laser sensor. If "Autom. reading gate control" is set as the parameter value, the BCL activates the reading gate automatically if the reflector is obscured.	0	UNSIGNED8	0: Normal AutoreflAct switched off. 1: Auto AutoreflAct activated. Automatic reading gate control. 2: Manual AutoreflAct activated. No reading gate control, signaling only.	0
Debouncing	The parameter defines the debounce time in scans for the reflector detection. With a motor speed of 1000, 1 scan corresponds to a debounce time of 1 ms.	1	UNSIGNED8	1 … 16	5

Parameter length

2 bytes

Input data

None

Output data

None

8.15.3 Module 92 – AutoControl

PROFINET-IO module identifier

Module ID: 1092

Submodule ID: 1

Description

The module defines the mode of operation of the function *AutoControl*. The function monitors the quality of the decoded bar codes and compares these with a limit value. If the limit is reached, a status is set.

Parameter

Tab. 8.49: Parameters for module 92

Parameter	Description	Addr.	Data type	Value range	Default
AutoControl enable	This parameter can be used to activate or deactivate the *AutoControl* function	0	UNSIGNED8	0: Deactivated 1: Activated	0

Parameter	Description	Addr.	Data type	Value range	Default
Limit for reading quality	The parameter defines a threshold for the reading quality in %.	1	UNSIGNED8	0 … 100%	50 %
Sensitivity	With this parameter the sensitivity towards changes in the reading ability can be specified. The higher the value, the less influence a change of reading ability has.	2	UNSIGNED8	0 … 255	0

Parameter length

3 bytes

Input data

Tab. 8.50: Input data for module 92

Input data	Description	Addr.	Data type	Value range	Initial value
Scan quality	Represents the current average value of the scan quality (at the time of the last reading gate).	0	UNSIGNED8	0 … 100	0

Input data length

1 byte

Output data

None

NOTICE

By means of the *AutoControl* function, it is possible to detect bar codes of decreasing quality and thus take appropriate measures before the label is no longer legible. With activated *AutoControl* function, note that the "Processing end at end of label" parameter in the CRT module should be set to allow for a better assessment of the bar code quality, see chapter 8.6.3 "Module 7 – Code reconstruction technology".

8.15.4 Module 100 – multiScan master

PROFINET-IO module identifier

Module ID: 1100

Submodule ID: 1

Description

The module defines the mode of operation of the function *multiScan master*. The multiScan master performs the control function in the multiScan network. It starts the decoding, accepts the decoding results of the assigned slave (node 1 … node 32) and links these to the final decoding result. This result is then passed on to the host via the host interface. The complete multiScan unit behaves as a logical bar code reader relative to the control.

Parameter

Tab. 8.51: Parameters for module 100

Parameter	Description	Addr.	Data type	Value range	Default
Reserved		0.7	Bit		
Reserved		0.0 … 1.7	Bit		

Parameter	Description	Addr.	Data type	Value range	Default
Slave UDP port #	Port number for the UDP communication with the slave participants	2	UNSIGNED16	0-0xffff	10003
multiScan slave node 1	IP address node 1	4	IP_ADDRESS		0.0.0.0
multiScan slave node 2	IP address node 1	19	IP_ADDRESS		0.0.0.0
multiScan slave node 3	IP address node 2	34	IP_ADDRESS		0.0.0.0
multiScan slave node 4	IP address node 3	49	IP_ADDRESS		0.0.0.0
multiScan slave node 5	IP address node 4	64	IP_ADDRESS		0.0.0.0
multiScan slave node 6	IP address node 5	79	IP_ADDRESS		0.0.0.0
multiScan slave node 7	IP address node 6	94	IP_ADDRESS		0.0.0.0
multiScan slave node 8	IP address node 7	109	IP_ADDRESS		0.0.0.0
multiScan slave node 9	IP address node 8	124	IP_ADDRESS		0.0.0.0
multiScan slave node 10	IP address node 9	139	IP_ADDRESS		0.0.0.0

Parameter length

154 bytes

Input data

Tab. 8.52: Input data for module 92

Input data	Description	Addr.	Data type	Value range	Initial value
MoE network status	General status of the MoE network	0	UNSIGNED8	0-0xff	0
Slave status 1-8	Status of slave participants 1-8	1	UNSIGNED8	Bit-coded per slave	0
Slave status 9-16	Status of slave participants 9-16	2	UNSIGNED8	Bit-coded per slave	0
Slave status 17-23	Status of slave participants 17-23	3	UNSIGNED8	Bit-coded per slave	0
Slave status 24-32	Status of slave participants 24-32	4	UNSIGNED8	Bit-coded per slave	0

MoE network status

The MoE network status signals the status of the complete network. States:

- 0x00 init. state, not ready
- 0x01 network ready

The "Network ready" network status is only signaled if all configured slaves are ready, see Slave status.

Slave status

For each slave participant, one bit signals the network status of the respective slave.

- Value = 0: status "not ready"
- Value = 1: status "ready"

Input data length

1 byte

Output data

None

NOTICE	
	The presence of this module activates the multiScan master mode and sets all necessary master communication parameters. In this case, the master IP address corresponds to the PROFINET-IO device, i.e., its own IP address.

Data format of the IP_ADDRESS

The IP address is entered as a string in the usual IP-V4 notation, e.g., 192.168.0.1. In addition, it is permissible to enter a 0 for the default setting.

IP_ADDRESS = 0 means that the node is deactivated, i.e., the entry is ignored. The slave enable parameter is automatically set according to the IP address setting during the PNIO configuration phase.

8.15.5 Module 101 – multiScan slave addresses 1

PROFINET-IO module identifier

Module ID: 1101

Submodule ID: 1

Description

Additional module for the configuration of the slave addresses for slaves 11-20.

Parameter

Tab. 8.53: Parameters for module 101

Parameter	Description	Addr.	Data type	Value range	Default
multiScan slave node 11	IP address node 11	0	IP_ADDRESS		0.0.0.0
multiScan slave node 12	IP address node 12	15	IP_ADDRESS		0.0.0.0
multiScan slave node 13	IP address node 13	30	IP_ADDRESS		0.0.0.0
multiScan slave node 14	IP address node 14	45	IP_ADDRESS		0.0.0.0
multiScan slave node 15	IP address node 15	60	IP_ADDRESS		0.0.0.0
multiScan slave node 16	IP address node 16	75	IP_ADDRESS		0.0.0.0
multiScan slave node 17	IP address node 17	90	IP_ADDRESS		0.0.0.0
multiScan slave node 18	IP address node 18	105	IP_ADDRESS		0.0.0.0
multiScan slave node 19	IP address node 19	120	IP_ADDRESS		0.0.0.0

Parameter	Description	Addr.	Data type	Value range	Default
multiScan slave node 20	IP address node 20	135	IP_ADDRESS		0.0.0.0

Parameter length

150 bytes

Input data

None

Output data

None

Data format of the IP_ADDRESS

The IP address is entered as a string in the usual IP-V4 notation, e.g., 192.168.0.1. In addition, it is permissible to enter a 0 for the default setting.

IP_ADDRESS = 0 means that the node is deactivated, i.e., the entry is ignored. The slave enable parameter is automatically set according to the IP address setting during the PNIO configuration phase.

8.15.6 Module 102 – multiScan slave addresses 2

PROFINET-IO module identifier

Module ID: 1102

Submodule ID: 1

Description

Additional module for the configuration of the slave addresses for slaves 21-32.

Parameter

Parameter analogous to module 101.

Parameter length

180 bytes

Input data

None

Output data

None

8.16 Example configuration: Indirect activation via the PLC

8.16.1 Task

Reading of a 10-digit code in 2/5 Interleaved format

Activation of the BCL 248i via the PLC

Code sample

Code 2/5 Interleaved 10 digits with check digit

2234234459

8.16.2 Procedure

Hardware, connections

The following connections must have been established:

Voltage supply (PWR)

PROFINET-IO (HOST) In

Required modules

Include the following modules in your project:

Module 1010 – Activations

Module 1023 – Decoding result 12 bytes

Parameter settings

No parameters need to be set separately. The standard parameter set provides all required functions.

Flow charts

Successful reading

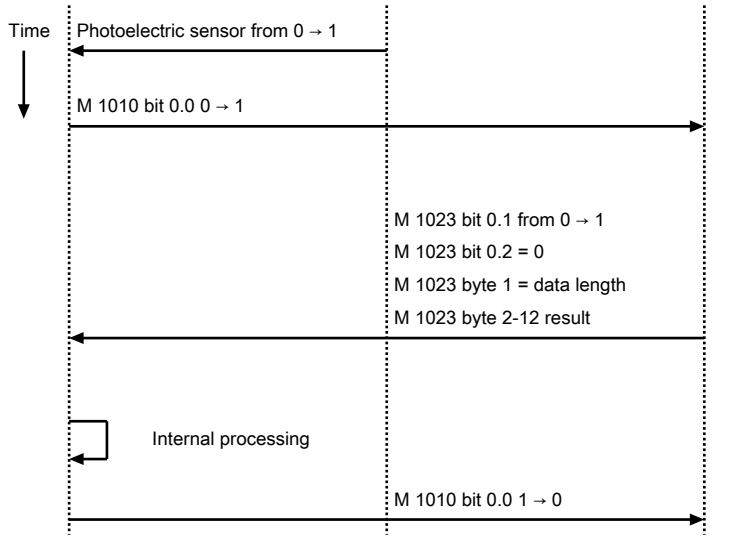

Description
The photoelectric sensor is interrupted.
Activation bit 0.0 is set to 1. This activates the reading gate.
The bar codes that have been read are processed and transmitted by module 1023: Reading concluded bit 0.1 = 1 and bar code not decoded bit 0.2 = 0. The data length is entered in byte 1, in this case 9 decimal. The decoding result is transmitted in the following 11 bytes.
Internal data processing.
Activation bit 0.0 is reset to 0.

Unsuccessful reading

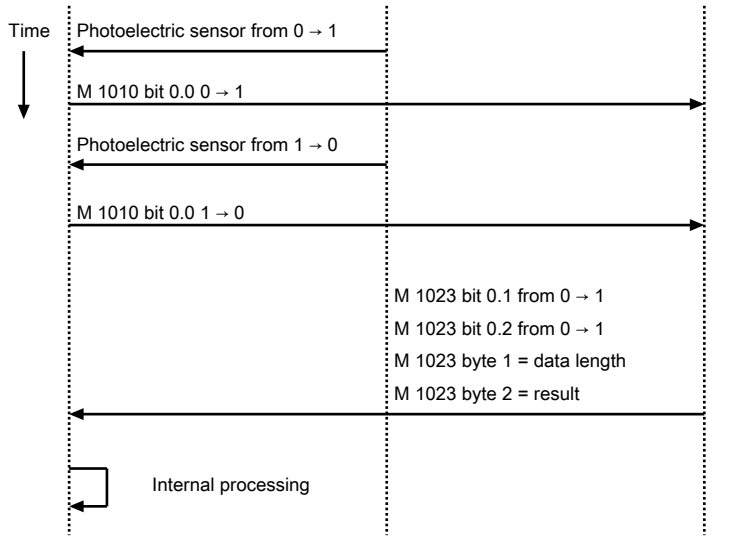

Description
The photoelectric sensor is interrupted.
Activation bit 0.0 is reset to 1.
The reading gate elapses without read result.
Activation bit 0.0 is reset to 0.
The module decoding state signals: Reading concluded bit 0.1 = 1 and bar code not decoded bit 0.2 = 1. The data length is entered in byte 1. The result hex 3F ("?" = no read) is transmitted. ~~Internal processing of the data and signaling of the~~ non-reading.

8.17 Example configuration: Direct activation via the switching input

8.17.1 Task

- Reading of a 12-digit bar code in 2/5 Interleaved format
- Direct activation of the BCL 248i via a photoelectric sensor

Code sample

Code 2/5 Interleaved 12 digits with check digit

8.17.2 Procedure

Hardware, connections

The following connections must have been established:

- Voltage supply (PWR)
- PROFINET-IO (HOST) In
- Photoelectric sensor at SWI1

Required modules

Include the following modules in your project:

- Module 1023 – Decoding result 12 bytes

Parameter settings of the "device parameters"

Tab. 8.54: Device parameters for example configuration 2

Byte	Description	Default value	Change value to
1	Code type 1	0	01: 2/5 Interleaved
4	Number of digits 3	0	12

Flow charts

Successful reading

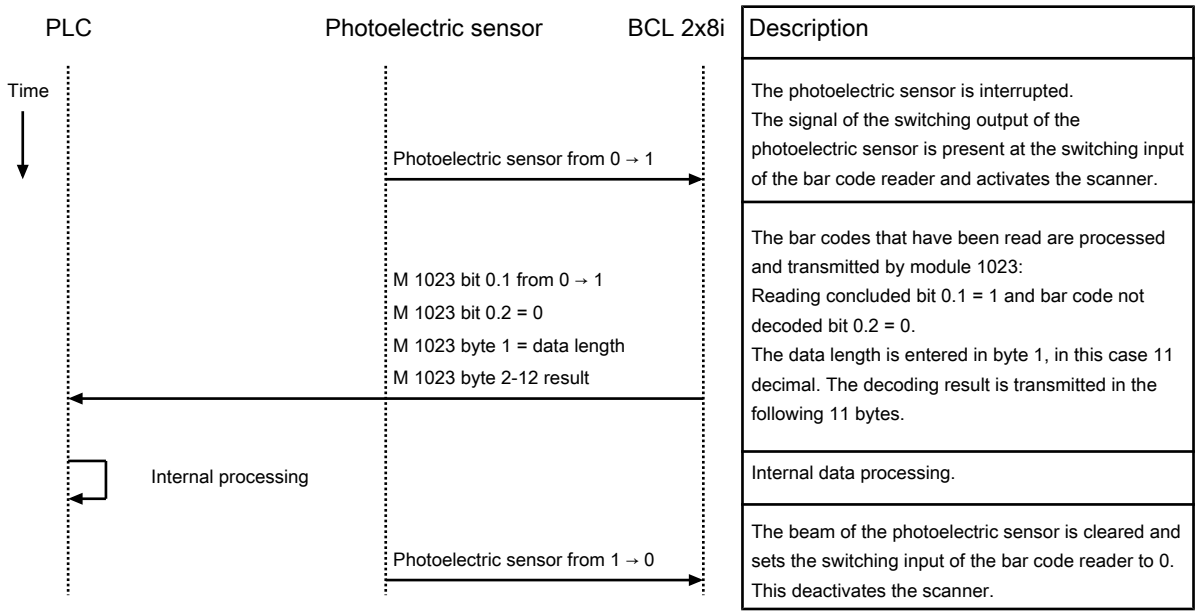

Unsuccessful reading

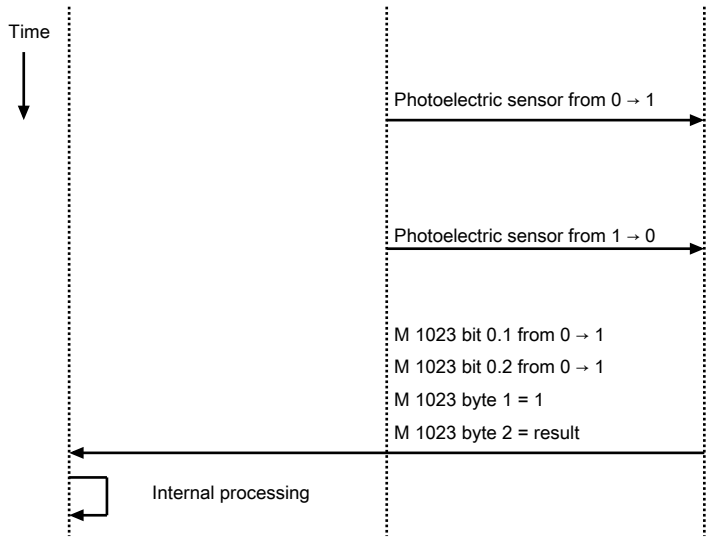

Description
The photoelectric sensor is interrupted. The signal of the switching output of the photoelectric sensor is present at the switching input of the bar code reader and activates the scanner.
The beam of the photoelectric sensor is cleared before a read result is present. The photoelectric sensor sets the switching input of the bar code reader to 0 and deactivates the scanner.
The module decoding state signals: Reading concluded bit 0.1 = 1 and bar code not decoded bit 0.2 = 1. The data length is entered in byte 1. The result hex 3F ("?" = no read) is transmitted.
Internal data processing.

9 Online commands

9.1 Overview of commands and parameters

Online commands can be used to send commands directly to the device for control and configuration. For this purpose, the bar code reader must be connected to a host or service computer via the interface. The described commands are sent via the host interface.

Online commands offer the following options for controlling and configuring the bar code reader:

- Control/decode the reading gate
- Read/write/copy parameters
- Carry out an automatic configuration
- Teach-in/set reference codes
- Call up error messages
- Query statistical device information
- Perform a software RESET and re-initialize the bar code reader

Syntax

Online commands consist of one or two ASCII characters followed by command parameters.

No separation characters may be entered between the command and the command parameter(s). Both small and capitalized letters can be used.

Example:

Command ’**CA**’:	autoConfig function
Parameter ’**+**’:	Activation
Transmitted is:	’**CA+**’

Notation

Commands, command parameters and returned data are enclosed between single quotation marks ’ ’ in the text of this manual.

Most online commands are acknowledged by the device and any requested data returned. For commands that are not acknowledged, command execution can be observed or monitored directly on the device.

9.2 General online commands

Software version number

Command	**’V’**
Description	Requests device version information
Parameter	None
Acknowledgment	Example: **’BCL 248i SM 110 V1.11.0 2020-08-31’** The first line contains the device type of the bar code reader, followed by the device version number and version date. The data which is actually displayed may vary from the values given here.

NOTICE

You can use this command to check whether the communication between PC and bar code reader is functional.

↳ If you do not receive an acknowledgment, please check the interface connections or the protocol.

Software reset

Command	'H'
Description	Carries out a software reset. The device is restarted and reinitialized, leaving it in the same state as when the supply voltage is switched on.
Parameter	None
Acknowledgment	'S' (start signal)

Code recognition

Command	'CC'		
Description	Detects an unknown bar code and outputs number of digits, code type, and code information to the interface, without storing the bar code in the parameter memory.		
Parameter	None		
Acknowledgment	'xx yyyy zzzzzz'		
	xx	Code type of the read code	
		'01'	2/5 Interleaved
		'02'	Code 39
		'03'	Code 32
		'06'	UPC (A, E)
		'07'	EAN
		'08'	Code 128, EAN 128
		'10'	EAN Addendum
		'11'	Codabar
		'12'	Code 93
		'13'	GS1 DataBar OMNIDIRECTIONAL
		'14'	GS1 DataBar LIMITED
		'15'	GS1 DataBar EXPANDED
	yy	Number of digits of the read code	
	zzzzzz	Contents of the decoded label. A ↑ appears if the label was not correctly read.	

autoConfig

Command	’CA’		
Description	Activates or deactivates the *autoConfig* function. Certain label reading parameters are programmed automatically in the setup by the labels which the bar code reader reads while the *autoConfig* function is active.		
Parameter	'+'	Activates *autoConfig*	
	'/'	Rejects the last code read	
	'-'	Deactivates *autoConfig* and stores the decoded data in the current parameter set	
Acknowledgment	’CSx’		
	x	Status	
		’0’	Valid **’CA’** command
		’1’	Invalid command
		’2’	autoConfig could not be activated
		’3’	autoConfig could not be deactivated
		’4’	Result could not be deleted
Response	’xx yyyy zzzzzz’		
	xx	Number of digits of the read code	
	yy	Code type of the read code	
		’01’	2/5 Interleaved
		’02’	Code 39
		’03’	Code 32
		’06’	UPC (A, E)
		’07’	EAN
		’08’	Code 128, EAN 128
		’10’	EAN Addendum
		’11’	Codabar
		’12’	Code 93
		’13’	GS1 DataBar OMNIDIRECTIONAL
		’14’	GS1 DataBar LIMITED
		’15’	GS1 DataBar EXPANDED
	zzzzzz	Contents of the decoded label. A ↑ appears if the label was not correctly read.	

Alignment mode

Command	’JP’	
Description	Activates or deactivates the alignment mode for simple mounting alignment of the device. After activating the function with **JP+**, the bar code reader constantly outputs status information on the serial interface. With this online command, the bar code reader is set to terminate the decoding after 100 successfully decoded labels and output the status information. Subsequently, the read process is reactivated automatically. In addition to the output of the status information, the laser beam is used to display the reading quality. Depending on how many read results could be extracted, the duration of the laser's "OFF" time increases. If the reading quality is high, the laser beam flashes in brief, regular intervals. The worse the decoder decodes, the longer the pauses become during which the laser is switched off. The flashing intervals become more and more irregular because the laser may, in total, be active for longer to extract more labels. The duration of the pauses has been stepped in such a way that they can be distinguished by the eye.	
Parameter	’+’	activates the alignment mode
	’-’	deactivates the alignment mode
Acknowledgment	’yyy zzzzzz’	
	yyy	Read quality in %. A high process availability is ensured at read qualities > 75 %.
	zzzzzz	Bar code information

Manual definition of the reference code

Command	’RS’		
Description	This command can be used to define a new reference code in the bar code reader by means of direct input via the serial interface or the Ethernet interface. The data is saved in the parameter set according to your input under reference code 1 through 2 and stored in the working buffer for direct further processing.		
Parameter	’RSyvxxzzzzzzzz’ **y**, **v**, **x** and **z** are placeholders (variables) for the actual input.		
	y	Def. reference code no.	
		’1’	(Code 1)
		’2’	(Code 2)
	v	Storage location for reference code:	
		’0’	RAM+EEPROM
		’3’	RAM only
	xx	Defined code type (see command 'CA')	
	z	Defined code information (1 … 63 characters)	
Acknowledgment	’RS=x’		
	x	Status	
		’0’	Valid **’Rx’** command
		’1’	Invalid command
		’2’	Insufficient memory for reference code
		’3’	Reference code has not been saved
		’4’	Reference code invalid
Example	Entry = ’RS130678654331’ Code 1 (1), RAM only (3), UPC (06), code information		

Reference code teach-in

Command	’RT’		
Description	This command enables a reference code to be defined quickly by reading an example label.		
Parameter	’RTy’		
	y	Function	
		’1’	Defines reference code 1
		’2’	Defines reference code 2
		’+’	Activates the definition of reference code 1 up to the value of Parameter no_of_labels
		’-’	Ends the teach event
Acknowledgment	The bar code reader responds with command **’RS’** and corresponding status (see command ’RS’). After a bar code has been read, it sends the result in the following format: ’**RCyvxxzzzzz**’ **y**, **v**, **x** and **z** are placeholders (variables) for the actual input.		
	y	Defined reference code no.	
		’1’	(Code 1)
		’2’	(Code 2)
	v	Storage location for reference code	
		’0’	RAM+EEPROM
		’3’	RAM only
	xx	Defined code type (see command 'CA')	
	z	Defined code information (1 … 63 characters)	

NOTICE

With this function, only code types are recognized that are identified using the *autoConfig* function or which were set in the set-up.

- After each reading via an ’RTy’ command, explicitly switch off the function again since failure to do so will interfere with other commands as well as prevent execution of a new ’RTx’ command.

Reading a reference code

Command	’RR’		
Description	The command reads out the reference code defined in the bar code reader. If no parameters are specified, all defined codes are output.		
Parameter	<reference code number>		
	’1’ … ’2’	Value range of reference code 1 to 2	
Acknowledgment	Output in the following format: ’**RCyvxxzzzzzz**’ If no reference codes are defined, nothing is entered for **zzzzzz**. **y**, **v**, **x** and **z** are placeholders (variables) for the actual input.		
	y	Defined reference code no.	
		’1’	(Code 1)
		’2’	(Code 2)
	v	Storage location for reference code	
		’0’	RAM+EEPROM
		’3’	RAM only
	xx	Defined code type (see command 'CA')	
	z	Defined code information (1 … 63 characters)	

9.3 Online commands for system control

Activate sensor input

Command	’+’
Description	The command activates configured decoding. This command is used to activate the reading gate. It remains active until it is deactivated by one of the following criteria: • Deactivation by a manual command • Deactivation by a switching input • Deactivation upon reaching the specified read quality (equal scans) • Deactivation by timeout • Deactivation upon reaching a preset number of scans without information
Parameter	None
Acknowledgment	None

Deactivate sensor input

Command	’-’
Description	The command deactivates configured decoding. This command can be used to deactivate the reading gate. Following deactivation, the read result is output. Because the reading gate was manually deactivated and, thus, no GoodRead criterion was met, a NoRead is output.
Parameter	None
Acknowledgment	None

9.4 Online commands for configuration of switching inputs/outputs

Activate switching output

Command	’OA’		
Description	Switching output SWO2 can be activated with this command. The logic state is output, i.e., an inverted logic is taken into account (e.g., inverted logic and a state of High corresponds to a voltage of 0 V at the switching output).		
Parameter	’OA<a>’ <a> Selected switching output 2, unit (dimensionless)		
Acknowledgment	None		

Query the state of the switching output

Command	’OA’		
Description	The states of the switching output set by means of commands can be queried with this command. The logic state is output, i.e., an inverted logic is taken into account (e.g., inverted logic and a state of High corresponds to a voltage of 0 V at the switching output).		
Parameter	’OA?’		
Acknowledgment	’OA S1=<a>;S2=<a>’		
	<a>	State of the switching output	
		’0’	Low
		’1’	High
		’I’	Configuration as switching input
		’P’	Passive configuration

Set the state of the switching output

Command	’OA’		
Description	The state of switching output SWO2 can be set with this command. The logic state is output, i.e., an inverted logic is taken into account (e.g., inverted logic and a state of High corresponds to a voltage of 0 V at the switching output). You may also use only a selection of the existing switching inputs/outputs as long as these are listed in ascending order.		
Parameter	’OA [S1=<a>][;S2=<a>]’		
	<a>	State of the switching output	
		’0’	Low
		’1’	High
Acknowledgment	’OA=<aa>’		
	<aa>	Status acknowledgment, unit (dimensionless)	
		’00’	Ok
		’01’	Syntax error
		’02’	Parameter error
		’03’	Other error

Deactivate switching output

Command	’OD’
Description	Switching output 2 can be deactivated with this command. The logic state is output, i.e., an inverted logic is taken into account (e.g., inverted logic and a state of High corresponds to a voltage of 0 V at the switching output).
Parameter	’OD<a>’ <a> Selected switching output 2, unit (dimensionless)
Acknowledgment	None

9.5 Online commands for the parameter set operations

Copying parameter set

Command	’PC’		
Description	This command can only be used to copy parameter sets in their entirety. This can be used to replicate the three parameter sets default, permanent and operating parameters on the basis of one another. In addition, this command also be used to restore the factory settings.		
Parameter	’PC<Source type><Target type>		
	<Source type>	Parameter data set that is to be copied, unit [dimensionless]	
		’0’	Parameter data set in permanent memory
		’2’	Default or factory parameter set
		’3’	Operating parameter data set in volatile memory
	<Target type>	Parameter set into which the data is to be copied, unit [dimensionless]	
		’0’	Parameter data set in permanent memory
		’3’	Operating parameter data set in volatile memory
	Permissible combinations here include:		
	’03’	Copying the data set from the permanent memory to the operating parameter data set	
	’20’	Copying the operating parameter data set to the permanent parameter set memory	
	’30’	Copying the default parameters to the permanent memory and to the main memory	
Acknowledgment	’PS=<aa>’		
	<aa>	Status acknowledgment, unit (dimensionless)	
		’00’	Ok
		’01’	Syntax error
		’02’	Impermissible command length
		’03’	Reserved
		’04’	Reserved
		’05’	Reserved
		’06’	Impermissible combination, source type - target type

Request parameter data set of the bar code reader

Command	’PR’		
Description	The parameters of the bar code reader are grouped together in a parameter set and permanently stored in memory. There is one parameter set in permanent memory and one operating parameter set in volatile memory; in addition, there is a default parameter set (factory parameter set) for initialization. This command can be used to edit the first two parameter sets (in permanent and volatile memory). A check sum can be used for reliable parameter transfer.		
Parameter	’PR<BCC type><PS type><Address><Data length>[<BCC>]’		
	<BCC type>	Check-digit function during transmission, unit [dimensionless]	
		’0’	Not used
		’3’	BCC mode 3
	<PS type>	Memory from which the values are to be read, unit [dimensionless]	
		’0’	Parameter values stored in the flash memory
		’1’	Reserved
		’2’	Default values
		’3’	Operating values in RAM
	<Address>’aaaa’	Relative address of the data within the data set, four-digit, unit [dimensionless]	
	<Data length>’bbbb’	Length of the parameter data to be transferred, four-digit, unit [length in bytes]	
	<BCC>	Check sum calculated as specified under BCC type	
Acknowledgment positive	PT<BCC-Type><PS-Type><Status><Start><Parameter Value Address><Parameter Value Address+1>…[;<Address><Parameter Value Address>][<BCC>]		
	<BCC type>	Check-digit function during transmission, unit [dimensionless]	
		’0’	Not used
		’3’	BCC mode 3
	<PS type>	Memory from which the values are to be read, unit [dimensionless]	
		’0’	Parameter values stored in flash memory
		’2’	Default values
		’3’	Operating values in RAM
	<Status>	Mode of parameter processing, unit [dimensionless]	
		’0’	No further parameters
		’1’	Additional parameters follow
	<Start>’aaaa’	Relative address of the data within the data set, four-digit, unit [dimensionless]	
	<P.value A.>	Parameter value of the parameter stored at this address; the parameter set data 'bb' is converted from HEX format to a 2-byte ASCII-format for transfer.	
	<BCC>	Check sum calculated as specified under BCC type,	

Command	'PR'		
Acknowledgment negative	'PS=<aa>'		
	Parameter reply:		
	<aa>	Status acknowledgment, unit [dimensionless]	
		'01'	Syntax error
		'02'	Impermissible command length
		'03'	Impermissible value for checksum type
		'04'	Invalid check sum received
		'05'	Impermissible number of data requested
		'06'	Requested data does not (any longer) fit in the transmission buffer
		'07'	Impermissible address value
		'08'	Read access after end of data set
		'09'	Impermissible QPF data set type

Determining parameter data set difference to default parameters

Command	'PD'		
Description	This command outputs the difference between the default parameter set and the operating parameter set or the difference between the default parameter set and the permanent parameter set. Comment: The reply supplied by this command can e.g. be directly used for programming a device with factory settings, whereby this device receives the same configuration as the device on which the PD-sequence was executed.		
Parameter	'PD<P.set1><P.set2>'		
	<P.set1>	Parameter data set that is to be copied, unit [dimensionless]	
		'0'	Parameter data set in permanent memory
		'2'	Default or factory parameter set
	<P.set2>	Parameter set into which the data is to be copied, unit [dimensionless]	
		'0'	Parameter data set in permanent memory
		'3'	Operating parameter data set in volatile memory
	Permissible combinations here include:		
		'20'	Output of the parameter differences between the default and the permanently saved parameter set
		'23'	Output of the parameter differences between the default parameter set and the operating parameter set saved in volatile memory
		'03'	Output of the parameter differences between the permanent parameter set and the operating parameter set saved in volatile memory

Command	’PD’		
Acknowledgment positive	PT<BCC><PS-Type><Status><Address><Parameter Value Address><Parameter Value Address+1>… [;<Address><Parameter Value Address>]		
	<BCC>	Check-digit function during transmission, unit [dimensionless]	
		’0’	No check digits
		’3’	BCC mode 3
	<PS type>	Memory from which the values are to be read, unit [dimensionless]	
		’0’	Values stored in flash memory
		’3’	Operating values stored in RAM
	<Status>	Mode of parameter processing, unit [dimensionless]	
		’0’	No further parameters
		’1’	Additional parameters follow
	<Address>’aaaa’	Relative address of the data within the data set, four-digit, unit [dimensionless]	
	<P.value>	Parameter value of the parameter stored at this address. The 'bb' parameter set data is converted for transmission from HEX format to a 2-byte-ASCII format.	
Acknowledgment negative	’PS=<aa>’		
	Parameter reply:		
	<aa>	Status acknowledgment, unit [dimensionless]	
		’0’	No difference
		’1’	Syntax error
		’2’	Impermissible command length
		’6’	Impermissible combination, parameter set 1 and parameter set 2
		’8’	Invalid parameter set

ПРОМЭЛЕКТРОНИКА / sales@prom-elec.com

Writing parameter set

Command	’PT’
Description	The parameters of the bar code reader are grouped together in a parameter set and permanently stored in memory. There is one parameter set in permanent memory and one operating parameter set in volatile memory; in addition, there is a default parameter set (factory parameter set) for initialization. This command can be used to edit the first two parameter sets (in permanent and volatile memory). A check sum can be used for reliable parameter transfer.

Command	'PT'		
Parameter	'PT<BCC type><PS type>Status><Addr.>P. value addr.><P. value addr+1>… [;<Addr.><P. value addr.>][<BCC>]'		
	<BCC type>	Check-digit function during transmission, unit [dimensionless]	
		'0'	No check digits
		'3'	BCC mode 3
	<PS type>	Memory from which the values are to be read, unit [dimensionless]	
		'0'	Parameter values stored in the flash memory
		'3'	Operating values in RAM
	<Status>	Mode of parameter processing, without function here, unit [dimensionless]	
		'0'	No reset after parameter change, no further parameters
		'1'	No reset after parameter change, additional parameters follow
		'2'	With reset after parameter change, no further parameters
		'6'	Set parameters to factory setting, no further parameters
		'7'	Set parameters to factory settings, lock all code types; the code-type setting must follow in the command.
	<Address>'aaaa'	Relative address of the data within the data set, four-digit, unit [dimensionless]	
	<P. value>'bb'	Parameter value of the parameter stored at this address. The bb parameter set data is converted from HEX format to a 2-byte-ASCII format for transfer.	
	<BCC>	Check sum calculated as specified under BCC type	
Acknowledgment	'PS=<aa>'		
	Parameter reply:		
	<aa>	Status acknowledgment, unit [dimensionless]	
		'01'	Syntax error
		'02'	Impermissible command length
		'03'	Impermissible value for checksum type
		'04'	Invalid check sum received
		'05'	Impermissible data length
		'06'	Invalid data (parameter limits violated)
		'07'	Impermissible start address
		'08'	Invalid parameter set
		'09'	Invalid parameter type

10 Care, maintenance and disposal

Cleaning

↳ Clean the device with a soft cloth; use a cleaning agent (commercially available glass cleaner) if necessary.

	NOTICE
!	**Do not use aggressive cleaning agents!** ↳ Do not use aggressive cleaning agents such as thinner or acetone for cleaning the device.

Maintenance

Usually, the bar code reader does not require any maintenance by the operator.

Repairs to the device must only be carried out by the manufacturer.

↳ For repairs, contact your responsible Leuze subsidiary or Leuze customer service (see chapter 12 "Service and support").

Disposing

↳ For disposal observe the applicable national regulations regarding electronic components.

11 Diagnostics and troubleshooting

Event-related diagnostics

PROFINET IO transmits events within an automation process as alarms that must be acknowledged by the application process.

The following events are possible:

- Process alarms: Events that originate from the process and are reported to the control.
- Diagnostic alarms: Events that indicate the malfunctioning of an IO device.
- Maintenance alarms: Transmission of information to avoid the failure of a device through preventative maintenance work.
- Manufacturer-specific diagnostics

To identify the alarms uniquely, they are always reported via a slot/subslot. The user can prioritize diagnostic and process alarms differently.

11.1 Error signaling via LED

Tab. 11.1: Meaning of the LED indicators

Error	Possible error cause	Measures
PWR LED		
Off	• No supply voltage connected to the device • Hardware error	• Check supply voltage • Contact Leuze customer service (Service and support)
Red, continuous light	Device error/parameter enable	Contact Leuze customer service (Service and support)
Red, flashing	Warning set Temporary operating fault	Query diagnostic data and carry out the resulting measures
Orange, continuous light	Device in Service mode	Reset Service mode with webConfig tool
NET LED		
Off	• No supply voltage connected to the device • Device not yet recognized by the PROFINET-IO • Hardware error	• Check supply voltage • Contact Leuze customer service (Service and support)
Orange, flashing	Topology error • Deviating target/actual topology detected	• Check interface • Check wiring
Red, continuous light	Network error No communication established to the IO controller	• Check interface • Check wiring • Error cannot be corrected by resetting • Contact Leuze customer service (Service and support)
Red, flashing	• No communication Parameterization or configuration failed • IO Error No data exchange	• Check interface • Can be corrected by resetting

11.2 Interface error

Tab. 11.2: Interface error

Error	Possible error cause	Measures
No communication via PROFINET-IO, status LED NET, continuous red light	• Incorrect wiring • Different protocol settings • Protocol not released • Wrong termination • Wrong device name set • Incorrect configuration	• Check wiring • Check protocol settings • Activate TCP/IP or UDP • Check termination • Check device name • Check configuration of the device in the configuration tool

Sporadic errors at the PROFINET-IO	• Incorrect wiring
	• Effects due to EMC
	• Overall network expansion exceeded
		• Check wiring
		  • In particular, check wire shielding
		  • Check the cable used
		• Check shielding (shield covering in place up to the clamping point)
		• Check grounding concept and connection to functional earth (FE)
		• Avoid EMC coupling caused by power cables laid parallel to device lines.
		• Check max. network expansion as a function of the max. cable lengths

12 Service and support

24-hour on-call service at:

+49 7021 573-0

Service hotline:

+49 7021 573-123

Monday to Friday 8.00 a.m. to 5.00 p.m. (UTC+1)

E-mail:

service.identify@leuze.de

Repair service and returns:

Procedure and Internet form can be found at

www.leuze.com/repair

Return address for repairs:

Service center

Leuze electronic GmbH + Co. KG

In der Braike 1

D-73277 Owen / Germany

What to do should servicing be required?

NOTICE

Please use this chapter as a master copy should servicing be required!

↳ Enter the contact information and fax this form together with your service order to the fax number given below.

Customer data (please complete)

Device type:	
Serial number:	
Firmware:	
Status of LEDs:	
Error description:	
Company:	
Contact person/department:	
Phone (direct dial):	
Fax:	
Street/No:	
ZIP code/City:	
Country:	

Leuze Service fax number:

+49 7021 573 - 199

13 Technical data

13.1 General specifications

Optics

Light source / Wavelength	Laser / 655 nm (visible red light)
Laser class	1 (acc. to IEC/EN 60825-1:2014 and 21 CFR 1040.10 with Laser Notice No. 56)
Max. output power (peak)	≤ 1.8 mW
Impulse duration	≤ 150 µs
Beam exit	Lateral zero position at an angle of 90°
Beam deflection	Via rotating polygon wheel (horizontal) and deflecting mirror (vertical)
Useful opening angle	Max. 60°
Adjustment range	Max. ±10°, adjustable via software
Scanning rate	1000 scans/s
Optics / resolution	M optics: 0.2 … 0.5 mm
Reading distance / reading field width	See reading fields

Code specifications

Code types	2/5 Interleaved Code 39 Code 128 EAN 128 EAN/UPC EAN Addendum Codabar Code 93 GS1 DataBar
Bar code contrast (PCS)	≥ 60 %
Ambient light tolerance	2000 lx (on the bar code)
Number of bar codes per scan	3

Interfaces

Interface type	1x PROFINET-IO on M12 (D)
Protocols	PROFINET-IO RT communication DCP TCP/IP (client/server) / UDP
Baud rate	10/100 MBaud

Switching input / switching output	• 1 switching input: 18 … 30 V DC depending on supply voltage, configurable I max. = 8 mA • 1 switching output: 18 … 30 V DC depending on supply voltage, configurable output current I max. = 60 mA (short-circuit proof) The switching inputs/outputs are protected against polarity reversal.

Electrical equipment

Supply voltage	18 … 30 V DC (PELV, Class 2)
Power consumption	≤ 4 W
VDE protection class	III

CAUTION

UL applications!

For UL applications, use is only permitted in Class 2 circuits in accordance with the NEC (National Electric Code).

NOTICE

Protective Extra Low Voltage (PELV)!

The device is designed in accordance with protection class III for supply with PELV (Protective Extra-Low Voltage).

Display elements

LEDs	3 LEDs for power (PWR), bus state (NET) and link state (LINK)

Mechanical data

Degree of protection	IP65
Connection type	Connected cable, 0.9 m, M12 connector, 5-pin Connected cable, 0.7 m, M12 connector, 4-pin
Weight	400 g incl. cable
Dimensions (H x W x D)	38 x 92 x 83 mm (without cable)
Housing	Diecast aluminum

Environmental data

Ambient temperature Operation Storage	 0 C … +40 °C -20 °C … +70 °C
Relative humidity	Max. 90 % (non-condensing)
Vibration	IEC 60068-2-6, test Fc
Shock	IEC 60068-2-27, test Ea
Continuous shock	IEC 60068-2-29, test Eb
Electromagnetic compatibility	EN 61000-6-3:2007-01 + A1:2011-03/AC:2012-08 EN 61000-6-2:2005-08 + AC:2005-09

Conformity, approvals

Conformity	CE

13.2 Reading fields

13.2.1 Bar code characteristics

NOTICE

The size of the bar code module influences the maximum reading distance and the width of the reading field. Therefore, when selecting a mounting location and/or the bar code label, take into account the different reading characteristics of the scanner with various bar code modules.

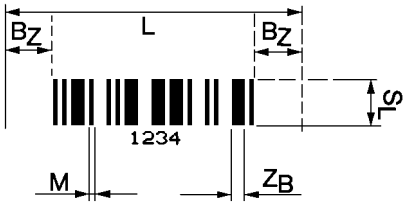

L Code length: The length of the bar code in mm including the start and stop characters. The quiet zone is included depending on the code definition.

S_L Bar length: height of the elements in mm

M Module: The narrowest line or space of a bar code in mm

Z_B Wide character: Wide bars and gaps are a multiple (ratio) of the module.

Z_B = Module x Ratio (Normal Ratio 1 : 2.5)

B_Z Quiet zone: The quiet zone should be at least 10 times the module, but not less than 2.5 mm.

Fig. 13.1: The most important characteristics of a bar code

The range in which the bar code can be read by the bar code reader, the so-called reading field, depends on the quality of the printed bar code and its dimensions. Therefore, above all, the module of a bar code is decisive for the size of the reading field.

NOTICE

A rule of thumb: The smaller the module of the bar code is, the smaller the maximum reading distance and reading field width will be.

13.2.2 Raster scanner

A raster variant is also available in the BCL 200i series. The BCL 200i as a raster scanner projects 8 scan lines which vary depending on the reading distance from the raster aperture.

Tab. 13.1: Raster line cover dependent on the distance

Distance [mm] starting at the zero position	50	100	200	250
Raster-line cover [mm] of all raster lines	12	17	27	33

NOTICE

There may not be two or more bar codes in the raster detection range simultaneously.

13.2.3 Reading field curves

NOTICE	
	Please note that the actual reading fields are also influenced by factors such as labeling material, printing quality, reading angle, printing contrast etc., and may thus deviate from the reading fields specified here. The origin of the read distance always refers to the front edge of the housing of the beam exit.

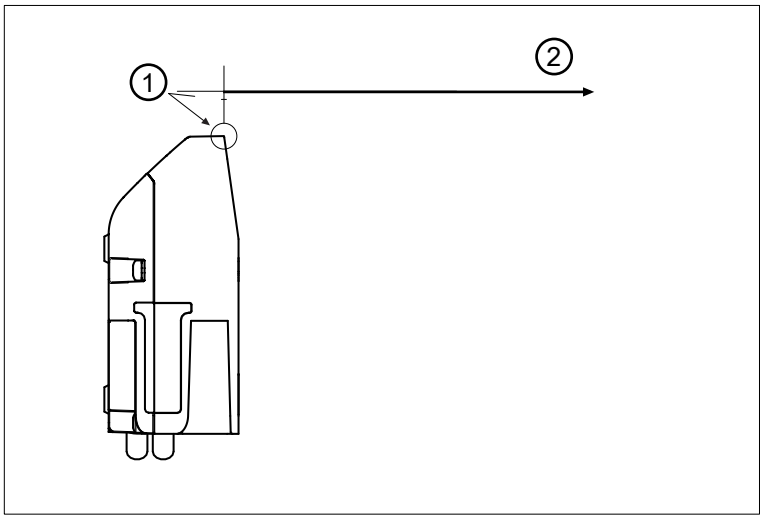

1 Zero position
2 Distance acc. to reading field curves

Fig. 13.2: Zero position of the reading distance

Tab. 13.2: Reading conditions for the reading field curves

Bar code type	2/5 Interleaved
Ratio	1:2.5
ANSI specification	Class A
Reading rate	> 75 %

Reading field curve BCL 248i S/R1 M 100, optics: Medium Density

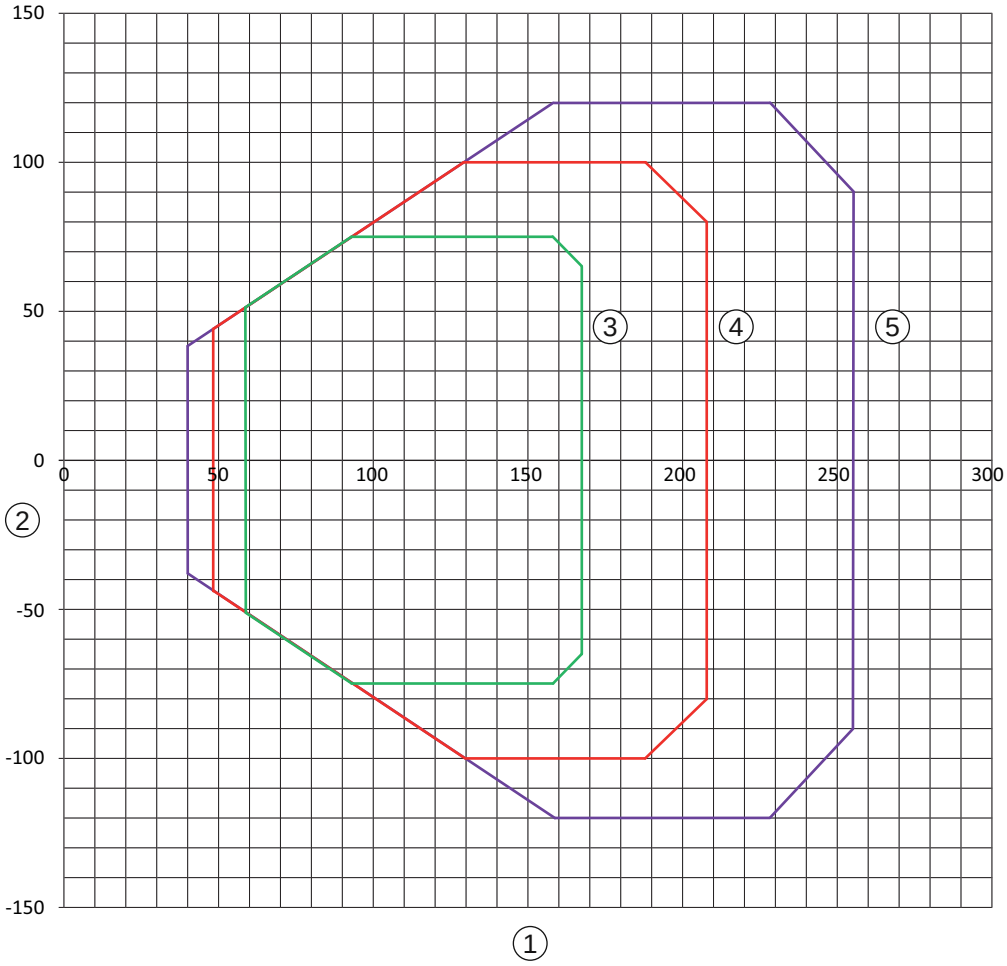

1	Reading distance [mm]	3	m = 0.2
2	Reading field width [mm]	4	m = 0.3
		5	m = 0.5

Fig. 13.3: "Medium Density" reading field curve for line scanner with deflecting mirror

The reading field curves apply for the reading conditions stated above.

13.3 Dimensioned drawings

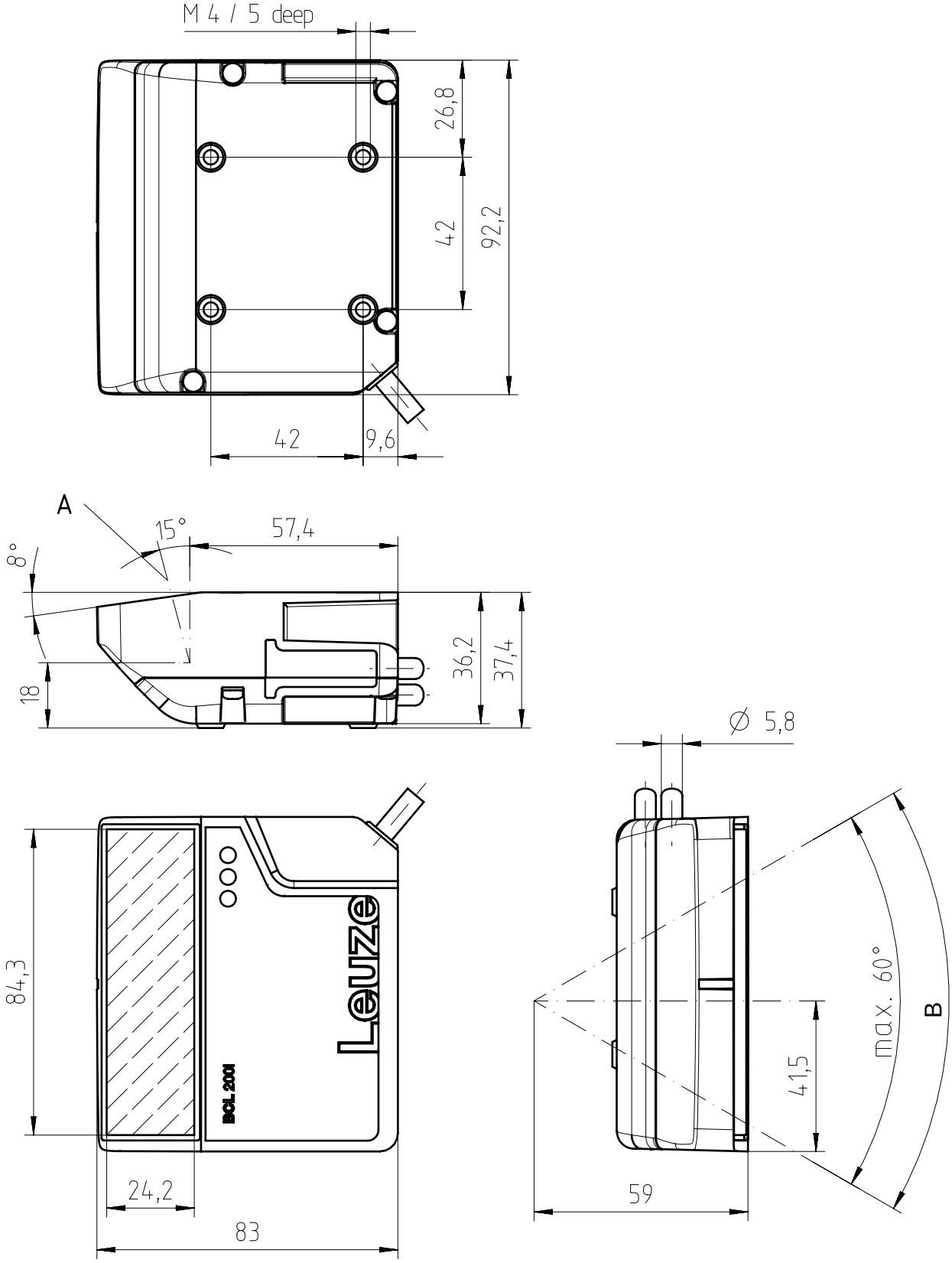

all dimensions in mm

A Optical axis

B Deflection angle of the laser beam: ± 30°

Fig. 13.4: Dimensioned drawing of BCL 200i

14 Order guide and accessories

14.1 Part number code

BCL 2xxiC S M 110 Fxxx

BCL	Operating principle: bar code reader
2	Series: BCL 200i
xx	Interface: 08: Ethernet 48: PROFINET 58: EtherNet/IP
iC	I: Integrated fieldbus technology C: IoT / Industry 4.0 connectivity
S	Scanning principle: S: Line scanner R1: Raster scanner
M	Optics: M: Medium distance (medium density)
11**0**	110: Lateral beam exit
Fxxx	Cloud connectivity for IoT / Industry 4.0 with 3-digit code

NOTICE

A list with all available device types can be found on the Leuze website at **www.leuze.com**.

14.2 Type overview

Tab. 14.1: Type overview with PROFINET interface

Type designation	Description	Part no.
BCL 248i SM 110	Single line scanner with M optics	50143211
BCL 248i R1M 110	Raster scanner with M optics	50143212

14.3 Accessories – connection technology

Tab. 14.2: Connector for the BCL 200i bar code reader

Type designation	Description	Part no.
KD 095-5A	M12 axial socket for voltage supply, shielded, user-configurable	50020501
D-ET1	RJ45 connector, user-configurable	50108991
S-M12A-ET	M12 connector, axial, D-coded, user-configurable	50112155
KDS ET-M12 / RJ45 W–4P	Adapter of M12, D-coded, to RJ45 socket	50109832

Tab. 14.3: Connection cables for the BCL 200i bar code reader

Type designation	Description	Part no.
M12 socket (5-pin, A-coded), axial connector, open cable end, unshielded		
KD U-M12-5A-V1-020	PWR connection cable, length 2 m	50132077
KD U-M12-5A-V1-050	PWR connection cable, length 5 m	50132079
KD U-M12-5A-V1-100	PWR connection cable, length 10 m	50132080
KD U-M12-5A-V1-300	PWR connection cable, length 30 m	50132432

Tab. 14.4: Interconnection cables for the BCL 200i bar code reader

Type designation	Description	Part no.
M12 connector (4-pin, D-coded), axial connector to RJ-45 connector, shielded, UL		
KSS ET-M12-4A-RJ45-A-P7-020	Ethernet interconnection cable to RJ45, length 2 m	50135080
KSS ET-M12-4A-RJ45-A-P7-050	Ethernet interconnection cable to RJ45, length 5 m	50135081
KSS ET-M12-4A-RJ45-A-P7-100	Ethernet interconnection cable to RJ45, length 10 m	50135082
KSS ET-M12-4A-RJ45-A-P7-150	Ethernet interconnection cable to RJ45, length 15 m	50135083
KSS ET-M12-4A-RJ45-A-P7-300	Ethernet interconnection cable to RJ45, length 30 m	50135084

14.4 Accessories – mounting systems

Tab. 14.5: Mounting devices for the BCL 200i bar code reader

Type designation	Description	Part no.
BT 56	Mounting device for rod	50027375
BT 56 - 1	Mounting device for rod	50121435
BT 59	Mounting bracket for groove mounting	50111224
BT 300 W	Mounting bracket	50121433
BT 300 - 1	Mounting device for rod	50121434

14.5 Accessories – Reflectors and reflective tapes

Tab. 14.6: Reflector for AutoReflAct

Type designation	Description	Part no.
REF 4-A-100x100	Reflective tape as reflector for AutoReflAct operation	50106119

15 EC Declaration of Conformity

The bar code readers of the BCL 200i series have been developed and manufactured in accordance with the applicable European standards and directives.

16 Appendix

16.1 ASCII character set

ASCII	Dec.	Hex.	Oct.	Designation	Meaning
NUL	0	00	0	ZERO	Zero
SOH	1	01	1	START OF HEADING	Start of heading
STX	2	02	2	START OF TEXT	Start of text characters
ETX	3	03	3	END OF TEXT	Last character of text
EOT	4	04	4	END OF TRANSMISS.	End of transmission
ENQ	5	05	5	ENQUIRY	Request for data trans.
ACK	6	06	6	ACKNOWLEDGE	Positive acknowledgment
BEL	7	07	7	BELL	Bell signal
BS	8	08	10	BACKSPACE	Backspace
HT	9	09	11	HORIZ. TABULATOR	Horizontal tabulator
LF	10	0A	12	LINE FEED	Line feed
VT	11	0B	13	VERT. TABULATOR	Vertical tabulator
FF	12	0C	14	FORM FEED	Form feed
CR	13	0D	15	CARRIAGE RETURN	Carriage return
SO	14	0E	16	SHIFT OUT	Shift out
SI	15	0F	17	SHIFT IN	Shift in
DLE	16	10	20	DATA LINK ESCAPE	Data link escape
DC1	17	11	21	DEVICE CONTROL 1	Device control character 1
DC2	18	12	22	DEVICE CONTROL 2	Device control character 2
DC3	19	13	23	DEVICE CONTROL 3	Device control character 3
DC4	20	14	24	DEVICE CONTROL 4	Device control character 4
NAK	21	15	25	NEG. ACKNOWLEDGE	Negative acknowledge
SYN	22	16	26	SYNCHRONOUS IDLE	Synchronization
ETB	23	17	27	EOF TRANSM. BLOCK	End of data transmission block
CAN	24	18	30	CANCEL	Invalid
EM	25	19	31	END OF MEDIUM	End of medium
SUB	26	1A	32	SUBSTITUTE	Substitution
ESC	27	1B	33	ESCAPE	Escape
FS	28	1C	34	FILE SEPARATOR	File separator
GS	29	1D	35	GROUP SEPARATOR	Group separator
RS	30	1E	36	RECORD SEPARATOR	Record separator
US	31	1F	37	UNIT SEPARATOR	Unit separator
SP	32	20	40	SPACE	Space
!	33	21	41	EXCLAMATION POINT	Exclamation point
"	34	22	42	QUOTATION MARK	Quotation mark
#	35	23	43	NUMBER SIGN	Number sign
$	36	24	44	DOLLAR SIGN	Dollar sign
%	37	25	45	PERCENT SIGN	Percent sign

ASCII	Dec.	Hex.	Oct.	Designation	Meaning
&	38	26	46	AMPERSAND	Ampersand
’	39	27	47	APOSTROPHE	Apostrophe
(	40	28	50	OPEN. PARENTHESIS	Open parenthesis
)	41	29	51	CLOS. PARENTHESIS	Closed parenthesis
*	42	2A	52	ASTERISK	Asterisk
+	43	2B	53	PLUS	Plus sign
,	44	2C	54	COMMA	Comma
-	45	2D	55	HYPHEN (MINUS)	Hyphen
.	46	2E	56	PERIOD (DECIMAL)	Period (decimal)
/	47	2F	57	SLANT	Slant
0	48	30	60	0	Number
1	49	31	61	1	Number
2	50	32	62	2	Number
3	51	33	63	3	Number
4	52	34	64	4	Number
5	53	35	65	5	Number
6	54	36	66	6	Number
7	55	37	67	7	Number
8	56	38	70	8	Number
9	57	39	71	9	Number
:	58	3A	72	COLON	Colon
;	59	3B	73	SEMICOLON	Semicolon
<	60	3C	74	LESS THAN	Less than
=	61	3D	75	EQUALS	Equals
>	62	3E	76	GREATER THAN	Greater than
?	63	3F	77	QUESTION MARK	Question mark
@	64	40	100	COMMERCIAL AT	Commercial AT
A	65	41	101	A	Capital letter
B	66	42	102	B	Capital letter
C	67	43	103	C	Capital letter
D	68	44	104	D	Capital letter
E	69	45	105	E	Capital letter
F	70	46	106	F	Capital letter
G	71	47	107	G	Capital letter
H	72	48	110	H	Capital letter
I	73	49	111	I	Capital letter
J	74	4A	112	J	Capital letter
K	75	4B	113	K	Capital letter
L	76	4C	114	L	Capital letter
M	77	4D	115	M	Capital letter

ASCII	Dec.	Hex.	Oct.	Designation	Meaning
N	78	4E	116	N	Capital letter
O	79	4F	117	O	Capital letter
P	80	50	120	P	Capital letter
Q	81	51	121	Q	Capital letter
R	82	52	122	R	Capital letter
S	83	53	123	S	Capital letter
T	84	54	124	T	Capital letter
U	85	55	125	U	Capital letter
V	86	56	126	V	Capital letter
W	87	57	127	W	Capital letter
X	88	58	130	X	Capital letter
Y	89	59	131	Y	Capital letter
Z	90	5A	132	Z	Capital letter
[	91	5B	133	OPENING BRACKET	Opening bracket
\	92	5C	134	REVERSE SLANT	Reverse slant
]	93	5D	135	CLOSING BRACKET	Closing bracket
^	94	5E	136	CIRCUMFLEX	Circumflex
_	95	5F	137	UNDERSCORE	Underscore
`	96	60	140	GRAVE ACCENT	Grave accent
a	97	61	141	a	Lower case letter
b	98	62	142	b	Lower case letter
c	99	63	143	c	Lower case letter
d	100	64	144	d	Lower case letter
e	101	65	145	e	Lower case letter
f	102	66	146	f	Lower case letter
g	103	67	147	g	Lower case letter
h	104	68	150	h	Lower case letter
i	105	69	151	i	Lower case letter
j	106	6A	152	j	Lower case letter
k	107	6B	153	k	Lower case letter
l	108	6C	154	l	Lower case letter
m	109	6D	155	m	Lower case letter
n	110	6E	156	n	Lower case letter
o	111	6F	157	o	Lower case letter
p	112	70	160	p	Lower case letter
q	113	71	161	q	Lower case letter
r	114	72	162	r	Lower case letter
s	115	73	163	s	Lower case letter
t	116	74	164	t	Lower case letter
u	117	75	165	u	Lower case letter

ASCII	Dec.	Hex.	Oct.	Designation	Meaning
v	118	76	166	v	Lower case letter
w	119	77	167	w	Lower case letter
x	120	78	170	x	Lower case letter
y	121	79	171	y	Lower case letter
z	122	7A	172	z	Lower case letter
{	123	7B	173	OPENING BRACE	Opening brace
|	124	7C	174	VERTICAL LINE	Vertical line
}	125	7D	175	CLOSING BRACE	Closing brace
~	126	7E	176	TILDE	Tilde
DEL	127	7F	177	DELETE (RUBOUT)	Delete

16.2 Bar code sample

Module 0.3

Modul 0,3

1122334455

Modul 0,3

135AC

Modul 0,3

A1213314A

Modul 0,3

abcde

Modul 0,3

leuze

SC 2

1 23456 78901 2

SC 3

3456 7890

SC 0 S

77889

1 122334 455666

(01) 0 0000123 45678 4

Fig. 16.1: Bar code sample labels (module 0.3)

Module 0.5

Modul 0,5

6677889900

Modul 0,5

246BD

Modul 0,5

A1516617A

Modul 0,5

fghij

Modul 0,5

LEUZE

SC 4

0 98765 43219 8

SC 6

9876 5430

SC 2

0 099887 766550 44332

Fig. 16.2: Bar code sample labels (module 0.5)