Leuze

Original operating instructions

CSL 505

Switching light curtains

The Sensor People

We reserve the right to make technical changes
EN • 2020/03/02 • 50128679

ПРОМЭЛЕКТРОНИКА / sales@prom-elec.com

© 2020
Leuze electronic GmbH + Co. KG
In der Braike 1
73277 Owen/Germany
Phone: +49 7021 573-0
Fax: +49 7021 573-199
http://www.leuze.com
info@leuze.de

1 General information 5
1.1 About this technical description 5
1.2 Used symbols and signal words 5
1.3 Declaration of Conformity 5
2 Safety notices 6
2.1 Safety standards 6
2.2 Approved purpose 6
2.3 Working safely 7
3 Product description 8
3.1 General information 8
3.2 Performance characteristics 8
3.3 Configuration interface 9
3.4 Configuration software 10
3.5 Parameters (receiver) 11
3.5.1 Switching output (dark/light) 11
3.5.2 Output functions (pin 2/pin 4) 11
3.5.3 Beam mode 12
3.5.4 Relative switching threshold 13
3.5.5 Blanking of beams 13
3.5.6 Start beam of second switching range 14
3.5.7 Synchronization beam 15
3.5.8 Smoothing 15
3.5.9 Pulse stretching [ms] 15
3.5.10 Top blanking 15
3.5.11 Relative switching threshold: Warn 15
3.5.12 Warn signal delay [s] 16
3.5.13 Power-up teach delay [s] 16
3.5.14 Blanking warning 16
3.5.15 Overview table of configuration values for receiver 17
3.6 Parameters (transmitter) 19
3.6.1 High signal or Low signal at input 19
3.6.2 Operating range 20
4 Mounting and commissioning 21
4.1 Electrical connection 24
4.1.1 M8 connector variant 24
4.2 Teach event 25
4.2.1 Teach modes 25
4.2.2 Teach behavior 26
4.2.3 Teach event for devices prior to 40/2017 (firmware version up to V.2.21) 27
4.2.4 Teach event for devices after 40/2017 (firmware version starting with V2.22) 28
4.2.5 Optional teach-in adapter 28
4.3 LED indicators/Error diagnostics 29
4.3.1 Receiver bar 29
4.3.2 Transmitter bar 29
4.4 Substitution of Vario B 30
4.4.1 Receiver bar 30
4.4.2 Transmitter bar 30
5 Maintenance 31
6 Technical data 32
6.1 General specifications 32

6.2 Nomenclature 33
6.3 Dimensioned drawings 33
6.4 Dimensions 34
7 Accessories and scope of delivery 40
7.1 Accessories 40
7.2 Scope of delivery 40

Figures and tables

Figure 1: CSL505 interface 9
Figure 2: Pin assignment of CSL 505 switching light curtain cables 9
Figure 3: Configuration window of CSL505 software 10
Figure 4: Mounting the CSL 505 switching light curtain 21
Figure 5: M8 connector version, open cable end 24
Figure 6: LED indicators/Error diagnostics 29
Figure 7: CSL 505 with beam spacing 5 mm 33
Figure 8: CSL 505 with beam spacing > 5 mm 34

Table 1: Output functions (pin 2/pin 4) 11
Table 2: Beam mode 12
Table 3: Automatic beam blanking 14
Table 4: Output functions 14
Table 5: Configuration values Receiver 18
Table 6: High signal and Low signal at input 19
Table 7: Operating range 20
Table 8: Configuration values for transmitter 20
Table 9: Flash codes during teach event 27
Table 10: LED indicators of receiver bar 29
Table 11: LED indicators of transmitter bar 29
Table 12: Part number code 33
Table 13: Dimensions housing 34
Table 14: Dimensions CSL 505 37
Table 15: Dimensions of CSL 505, special variant "VB" 39
Table 16: Accessories 40
Table 17: Connection cables 40

1 General information

1.1 About this technical description

These operating instructions contain information regarding the proper and effective use of the CSL 505 switching light curtain. These operating instructions (PDF file) can be downloaded from the Internet at www.leuze.de.

1.2 Used symbols and signal words

The symbols used in this technical description are explained below.

	ATTENTION
	This symbol precedes text messages which must strictly be observed. Failure to observe the provided instructions could lead to personal injury or damage to equipment.

	NOTE
	This symbol indicates text passages containing important information.

1.3 Declaration of Conformity

The product satisfies the following standards:

EU Directive	2004/108/EC
Interference emission	EN 55022:2010
Interference rejection	EN 55024:2010
Degree of protection	EN 60529
Proximity switch	EN 60947-5-2
Certification	UL 61010-1 (Third Edition):2012-05; CAN/CSA-C22.2 No. 61010-1-1[1]

Leuze electronic GmbH + Co KG in D-73277 Owen, possesses a certified quality assurance system in accordance with ISO 9001.

[1] except for the –ER model

2 Safety notices

2.1 Safety standards

The CSL 505 switching light curtain was developed, manufactured and tested in accordance with the applicable safety standards. It corresponds to the state of the art.

2.2 Approved purpose

The CSL 505 switching light curtain is used for detecting objects in defined controlled areas as part of a superordinate overall system.

⚠ ATTENTION	
⚠	The protection of personnel and the device cannot be guaranteed if the device is operated in a manner not corresponding to its intended use. Leuze electronic GmbH + Co. KG is not liable for damages caused by improper use. Knowledge of this manual is an element of proper use.

In particular, unauthorized uses include:

- rooms with explosive atmospheres
- for medical purposes
- in circuits which are relevant to safety

⚠ ATTENTION	
⚠	The CSL 505 switching light curtains as well as their components are not certified safety components within the meaning of the EU machinery directive. They are not allowed to be used as a safety component with human protection function.

Areas of application

The CSL 505 switching light curtains are designed, in particular, for the following areas of application:

- Object detection in storage and materials-handling applications
- Overhang controls in transport systems
- Object detection and process controls in the packaging industry
- Object qualification in the surface industry

	Dark switching	Light switching
Monitoring area free	Output inactive	Output active
Beam interrupted	Output active	Output inactive

2.3 Working safely

ATTENTION	
	Access to or changes on the device, except where expressly described in this operating manual, is not authorized.

Unless explicitly stated otherwise, the device and its input and output circuits must be operated with a voltage supply that meets the requirements of PELV/SELV systems. Operation of the isolating device must not be hindered in any way.

The system must be secured to prevent it from being switched on again.

Safety regulations

Observe the locally applicable legal regulations and the rules of the employer's liability insurance association.

Qualified personnel

Mounting, commissioning and maintenance of the device must only be carried out by qualified personnel.

Installation and electrical connection of the light curtains should be performed only by qualified personnel in accordance with the applicable regulations, with the power supply disconnected and the device switched off.

3 Product description

3.1 General information

The CSL 505 switching light curtains monitor a defined area using invisible, infrared light beams. The light curtain systems consist of a transmitter bar (Tx) and receiver bar (Rx). They function in the same way as a system comprising multiple throughbeam photoelectric sensors. If one of the light beams between the transmitter bar and receiver bar is interrupted, this is registered by the evaluation electronics and signaled at the push-pull signal outputs.

3.2 Performance characteristics

- No separate evaluation unit required. The device is operated directly from a 24 V DC supply.
- Two short-circuit proof push-pull signal outputs: Can therefore be used both as PNP and as NPN.
- Plug-and-play: The CSL 505 switching light curtains are fully preconfigured at the factory.
- A teach event automatically adapts the operating range.
- Increased resolution possible thanks to crossed-beam scanning.

3.3 Configuration interface

The configuration can be read out and changed using the **CSL505 software**. The **CSL505 software** can be downloaded at the Leuze website: www.leuze.com. The **CSL505 interface** is used for connection to the serial port of a PC.

Figure 1: CSL505 interface

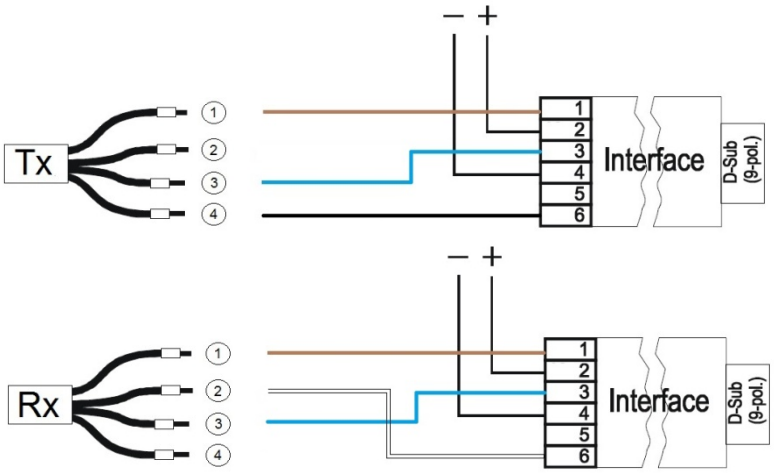

Legend:

1 brown
2 white
3 blue
4 black

Figure 2: Pin assignment of CSL 505 switching light curtain cables

A number of functions are configured via the transmitter and others via the receiver. For a complete list, see Table 5:"Configuration values Receiver" on page 18 and Table 8: “Configuration values Transmitter" on page 20.

1. Connect the CSL505 interface (part number 50132069) to the +24 V DC power supply unit as indicated by the labeling.
2. Connect the RS232 interconnection cable (included in the scope of delivery) to the PC.
3. Connect the transmitter (type CSL-T) or receiver (type CSL-R..) to the CSL505 interface module as indicated by the labeling.
4. Start the **CSL505 software** and define the COM interface.
5. Switch on the voltage supply.

The charge process is indicated in the lower right part of the configuration window.

3.4 Configuration software

The **CSL505 software** configuration software can be used to change the functionality of the CSL 505 light curtain. The software operates under the Windows® 95/98/2000/NT/XP/7/8 operating systems. Depending on the used parameter list, parameter values may have different designations or be hidden.

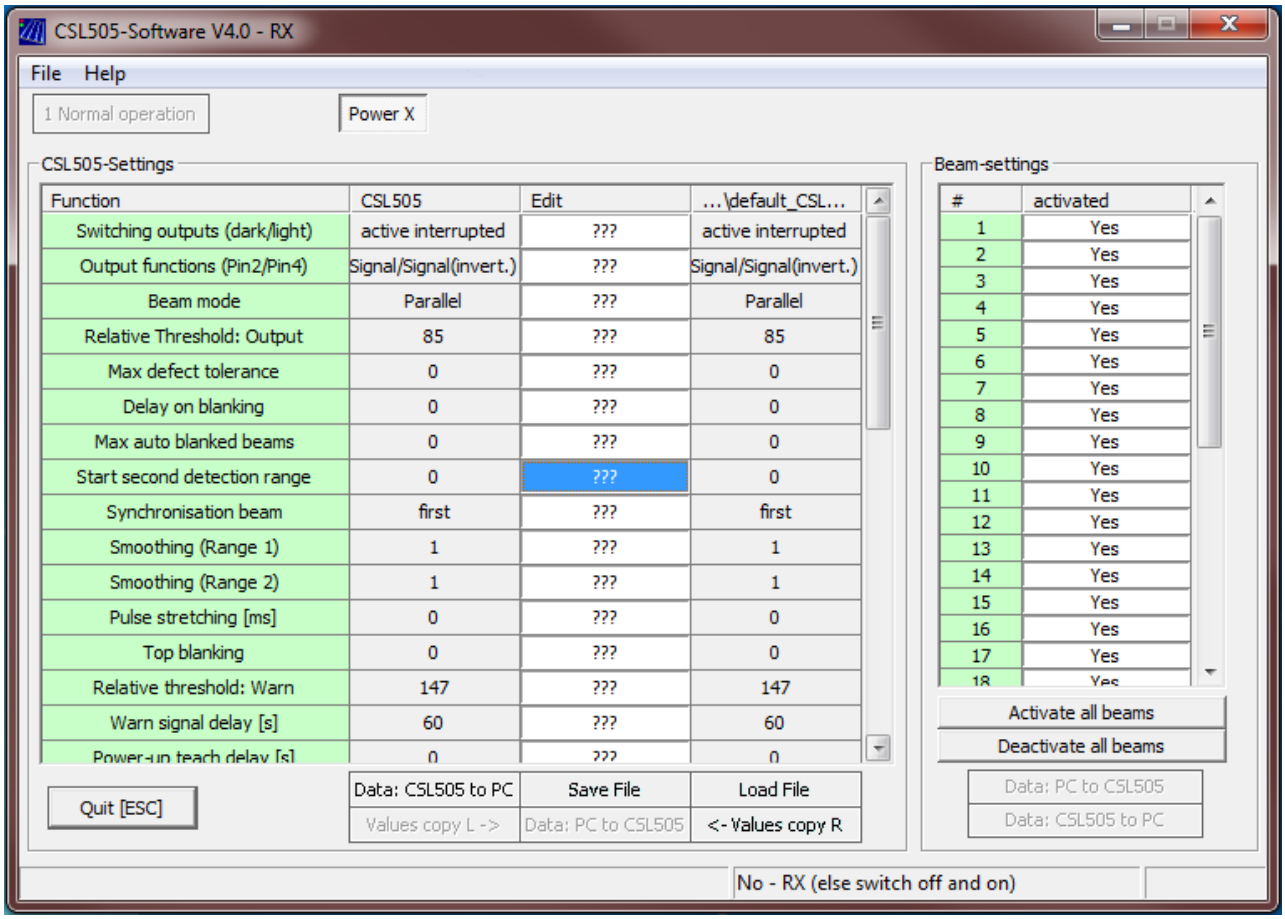

Figure 3: Configuration window of CSL505 software

Parameter values can be saved in a parameter file on the hard drive by clicking the *File: Save* button. Parameter values saved in this way can be imported via the menu *File -> Load parameter file* or by clicking the *File: Load* button.

The connected receiver bar can be activated and deactivated using the *Power X* button.

In general, parameters are changed in the white fields. Changed values are indicated by italic text with a yellow field background.

⚠ ATTENTION	
⚠	After entering numeric values, you must confirm the entry with <Return>.

After completing changes to the parameters, the configuration is transferred to the light curtain system by clicking the *Data: PC to CSL505* button.

⚠ ATTENTION	
⚠	Please note that only the data of the column above the button are transferred. The transmitted settings are retained even after the system is switched off.

Use the *1 Normal operation* button to switch the light curtain to the normal detection state.

3.5 Parameters (receiver)

The CSL 505 switching light curtains can be configured over a wide range.

3.5.1 Switching output (dark/light)

You can configure the CSL 505 switching light curtain to be dark switching or light switching.
This is set using the parameter ***Switching output (dark/light)***.

	Dark switching	Light switching
Monitoring area free	Output inactive	Output active
Beam interrupted	Output active	Output inactive

Input option: dark switching / light switching
Factory setting: dark switching

3.5.2 Output functions (pin 2/pin 4)

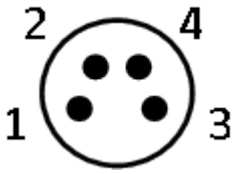

The CSL 505 switching light curtain has two outputs (pin 2 and pin 4 at the receiver). The function of the outputs can be set using the parameter ***Output functions (pin 2/pin 4)***.
For further information, see also the special case “3.5.6 Start beam of second switching range“ on page 14.

Output assignment	Pin 2	Pin 4
Normal	Signal	Warning (normal), i.e. active when warning is output
Normal with inverted warning output	Signal	Warning (inverted), i.e. active when device operation is OK
Swapped	Warning (normal), i.e. active when warning is output	Signal
Swapped with inverted warning output	Warning (inverted), i.e. active when device operation is OK	Signal
Swapped without warning output	-	Signal
Antivalent	Signal	Signal (inverted), i.e. active if pin 2 is inactive

Table 1: Output functions (pin 2/pin 4)

Signal: dark switching or light switching according to parameter ***Switching output (dark/light)***.
Factory setting: antivalent

3.5.3 Beam mode

Beam mode	Parallel beams	Diagonal beams	Single crossed-beam scanning	Multiple crossed-beam scanning	Multiple crossed-beam scanning
Synchronization beam	first or last	first or last	load	load	load
Number of beams	n	2n-1	3n-2	4n-4	5n-6
Max. perm. number of phys. beams (n)	160	80	54	41	33
Sketch	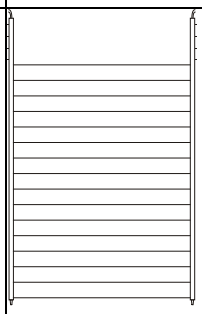	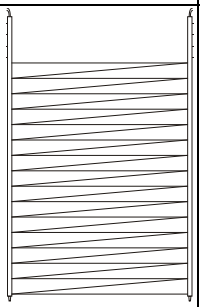	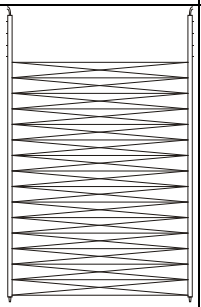	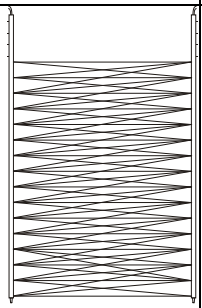	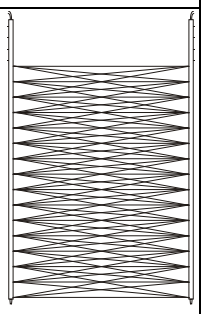

Table 2: Beam mode

NOTE

- A teach event must be performed after this parameter is changed.
- A higher number of beams also increases the cycle time!
- A total of max. 160 logical beams are possible.

Factory settings:

	Pin 1	Pin 3	Description
Receiver	+24 V DC	GND	Only parallel beams
	GND	+24 V DC	Parallel and diagonal beams

3.5.4 Relative switching threshold

During the teach event, the value for the brightness of every individual beam is measured and saved in a non-volatile memory. The absolute switching threshold per beam is determined by multiplying by the relative switching threshold (percentage of *Relative switching threshold*).

To ensure that the system responds even at low beam coverage levels, the switching threshold must be increased. The default value is 85 (corresponds to approx. 33 %). The switching threshold should be set to max. 179 (corresponds to approx. 70 %).

Use

Define switching threshold automatically	*Relative switching threshold* = 0
Improve detection of transparent objects	High switching threshold
Reduce effect of reflection bypass	High switching threshold
Tolerate rough environmental conditions	Low switching threshold

Input option: 0…255
Factory setting: 85

3.5.5 Blanking of beams

Various options are available for blanking beams.

It is important to note that the synchronization beam must always remain active!

3.5.5.1 Manual blanking via CSL505 software

You configure manual blanking in the beam configuration area on the right side of the CSL505 software program window. Select there the receiver element that is to be deactivated.

3.5.5.2 Automatic blanking during teach event (auto blanking)

All interrupted beams are blanked automatically during the teach event.

Blanking threshold specifies the signal strength below which beams are blanked automatically during the teach event.

If *Blanking threshold* is set to 0, the function is deactivated.

Input option: 0…255
Factory setting: 100

3.5.5.3 Blanking of defective beams

The parameter *Blanking of defective beams* specifies the number of beams that are tolerated. If this number exceeds the value for *Blanking of defective beams*, a serious error is signaled. Below this number, defective beams are blanked and not taken into consideration during evaluation.

All other blanked beams are not added to *Blanking of defective beams*.

Input option: 0…160
Factory setting: 0

3.5.5.4 Autom. beam bl. delay [s]

Time that must pass before a beam interruption is blanked. Specified in seconds.

Input option: 0…255
Factory setting: 0

3.5.5.5 Maximum automatic beam blanking

Permanently interrupted beams can be blanked automatically.

Automatic beam blanking is used to set how many adjacent beams of the same type (e.g. parallel beams) are allowed to be blanked. The count restarts after an active beam.

Example

Automatic beam blanking = 1

Beam 3, 5 and 8 can be blanked. If beam 9 is additionally covered, this beam is not blanked and the CSL 505 switching light curtain remains interrupted.

This function is often used for elevator applications and enables permanently interrupted beams to be blanked automatically.

	Automatic beam blanking
0	None
1	1 beam
2	2 beams of same type
...	...

Table 3: Automatic beam blanking

3.5.6 Start beam of second switching range

With *Start beam of second switching range* you split the CSL 505 switching light curtain into two ranges. The state of the ranges is indicated at the outputs pin 2 and pin 4.

Output functions	Pin 2	Pin 4
Normal	Range 1	Range 2
Normal with inverted warning output	Range 1	Range 2 inv.
Swapped	Range 2	Range 1
Swapped with inverted warning output	Range 2 inv.	Range 1
Swapped without warning output		Range 1
Antivalent	Range 1	Range 1 inv.

Table 4: Output functions

	NOTE
	• Switching ranges with non-parallel beams overlap. • If the synchronization beam is interrupted, both ranges switch. • The dark switching or hell switching (factory setting) parameter applies to both ranges. • If "1" is selected, the two ranges together cover the entire monitoring range. • **Smoothing** can be defined for each range

3.5.7 Synchronization beam

Synchronization beam is used to define whether the first beam (at the cable outlet) or the last beam is used for optical synchronization.

NOTE	
	• The transmitter and receiver must be set to the same value. • The synchronization beam cannot be suppressed. • Interruption of the synchronization beam is signaled at both ranges.

Input option: first / last
Factory setting: first

3.5.8 Smoothing

Smoothing (range 1) specifies the number of beams which must be interrupted before beam interruption is signaled. The interrupted beams do not have to occur consecutively.

If ranges are used (see the section 3.5.6 "Start beam of second switching range" on page 14), the value for the second range is defined using *Smoothing (range 2)*.

Example

- *Smoothing (range 1)* = "5":
  Output switches when 5 or more beams have been interrupted.
- Special function with: *Start beam of second switching range* = "1":
  Both smoothing values relate to the entire monitoring range.
- *Smoothing (range 1)* = "2":
  Smoothing (range 2) = "3":
  Start beam of second switching range = "10":
  If, for example, beam 4 and 7 are interrupted, range 1 switches; if beams 10, 11 and 20 are interrupted, the second range switches.

3.5.9 Pulse stretching [ms]

The parameter value *Pulse stretching [ms]* delays the change in state of the switching outputs by the set value in milliseconds (ms). A maximum delay of 255 ms is possible.

Input option: 0…255
Factory setting: 0

3.5.10 Top blanking

When the device is switched on, the beams covered at the beginning of the bar can be permanently blanked. *Top blanking* specifies how many consecutive beams can be blanked.

This function is intended for elevator applications and only available where *Synchronization beam = last*.

3.5.11 Relative switching threshold: Warn

If the intensity of the received signal remains below a set value (*Relative switching threshold: Warn* for a certain period (*Warn signal delay [s]*), the CSL 505 switching light curtain signals a "minor error".

Possible remedies:

- Clean the beam exit.
- Align the transmitter and receiver and perform the teach event again.

If *Relative switching threshold: Warn* is set to "0", the "soiling alarm" is deactivated.

Input option: 0…255
Factory setting: 147

3.5.12 Warn signal delay [s]

Time after which soiling is signaled. See the section 3.5.11 "Relative switching threshold: Warn" on page 15.

Input option: 0…255
Factory setting: 60

3.5.13 Power-up teach delay [s]

Switching threshold setting is activated at power-up. After a time (in seconds) has elapsed, the determined reference values are saved in a non-volatile memory, provided that the monitoring range was free. Otherwise the original reference values are used. This teach event at power-up is deactivated with "0" and "255".

Input option: 0…255
Factory setting: 0

3.5.14 Blanking warning

Blanking warning specifies the position (beam number) as of which an error message is issued in the event of blanking.

Input option: 0…160
Factory setting: 0

3.5.15 Overview table of configuration values for receiver

Configuration values	Default value (value range)	Description
First beam	1	Value is always 1
Last beam[2]	xx	Value is dependent on bar
Switching output (dark/light)	Dark switching	Light switching Dark switching
Output functions (pin 2/pin 4)	Antivalent	Normal Normal with inverted warning output Swapped Swapped with inverted warning output Swapped without warning output Antivalent
Beam mode	Parallel Diagonal with Rx polarity reversal	Parallel Diagonal Crossed-beam* 2x crossed beam* 3x crossed beam* (*only where *Synchronization beam = last*)
Relative switching threshold	85 (0…255)	85 corresponds to 33 % (255 corresponds to 100 %) 0 = Automatic switching threshold setting active.
Blanking of defective beams	0 (0…160)	Max. number of defective beams that are blanked automatically.
Autom. beam bl. delay [s]	0 (0…255)	Time that must pass before a beam interruption is blanked. Specified in seconds.
Automatic beam blanking	0 (0…160)	Number of consecutive beams of the same type which can be blanked.
Start beam of second switching range	0	This beam is the beginning of the 2nd range. Recommended for *"parallel" beam mode* only!
Synchronization beam	first	first = Synchronization using first beam. last = Synchronization using last beam.
Smoothing (range 1)	1 (1…160)	Number of interrupted beams as of which an interruption is detected.
Smoothing (range 2)	1 (1…160)	Number of interrupted beams as of which an interruption is detected. (range 2)
Pulse stretching [ms]	0 (0…255)	Time period in ms between output changes. (Value range: 0 – 255 ms)
Top blanking	0 (0…160)	Number of consecutive beams which can be blanked during start-up. Only where blanking threshold = 0.
Relative switching threshold: Warn	147 (0…255)	Threshold for soiling warning. Corresponds to 57 % (value * 256)
Warn signal delay [s]	60 (0…255)	Time after which soiling is signaled. Specified in seconds.

[2] Only the value of the physically present beams should be set; an incorrect value can lead to malfunctions.

Configuration values	Default value (value range)	Description
Power-up teach delay [s]	254 (0…255)	Improved teach behavior beginning with V.1.1 Allows the reference values to be saved '1' to '255' seconds after switching on.
Blanking threshold	100 (0…255)	Signal strength below which beams are blanked during the teach event. '0' deactivates the function.
Blanking warning	0 (0…160)	Beam number as of which an error message is issued in the event of blanking (not defective!).

Table 5: Configuration values Receiver

3.6 Parameters (transmitter)

When the transmitter is switched off by means of an input signal, a switching operation is specifically triggered, e.g. for a start test. Various functions are configurable.

When the transmitter is deactivated, the receiver reacts in the same way as for a beam interruption, and the transmitter LED flashes.

The transmitter cycle is not stopped; the system is therefore quickly ready for operation again after transmitter activation.

3.6.1 High signal or Low signal at input

Use the parameter value *High signal at input* for transmitter deactivation with active transmitter input, or *Low signal at input* for transmitter deactivation with inactive transmitter input.

Parameter "High signal at input" or "Low signal at input" for deactivation with signal at transmitter input				
Active		Inactive		
Low	High	Low	High	Comment
0	0	0	0	Transmitter deactivation off.
0	1	1	0	Only the synchronization beam is switched off. The warning output remains unchanged e.g. for a start test.
0	2	2	0	The synchronization beam remains active; all other beams are switched off. If the warning output is active, it switches after *Automatic beam blanking delay [s]* (see the section 3.5.5.4 „Autom. beam bl. delay [s]“ on page 14).
0	**3**	3	0	All beams are switched off, e.g. to prevent interference at multiple sensors. The warning output remains unchanged.

(Factory setting in **bold type**)

Table 6: High signal and Low signal at input

3.6.2 Operating range

The parameter *Operating range* is used to switch over to "reduced" operating range.

Operating range	Comment	
0	Increased transmitter power (factory setting in parameter set 1)	
1	Reduced transmitter power (factory setting in parameter set 2)	
2 … 255 Disable transmitter deactivation	Start test with range switching option Selectable at the input: 24 V reduced, 0 V normal The value corresponds to a time delay in steps of 2.56. Example: 200 gives a time delay of 512 ms. During the time delay, the transmitter is deactivated according to the mode set for transmitter deactivation. If the input signal returns to the original value within the delay time, transmitter deactivation is ended.	1 Extended operating range 2 Reduced operating range 3 Time delay 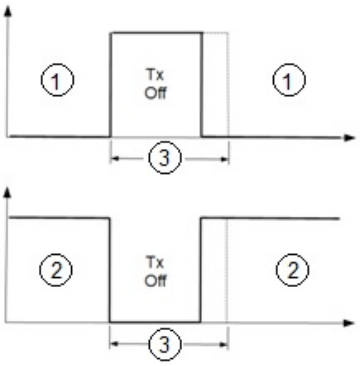

Table 7: Operating range

Factory settings:

	Pin 1	Pin 3	Description
Transmitter	+24 V DC	GND	Extended operating range: 1000 … 5000 mm (10000 mm for –ER)
	GND	+24 V DC	Reduced operating range: 300 … 1300 mm

3.6.2.1 Overview table of configuration values for transmitter

	Default value (value range)	Description
First beam	1	Value is always 1
Last beam	xx	Value is dependent on bar
High signal at input	3	Transmitter deactivation with active transmitter input
Low signal at input	0	Transmitter deactivation with inactive transmitter input
Operating range	0 or 1 (0…255)	Extended (0) or reduced (1) operating range 2…255: Disable transmitter deactivation
Synchronization beam	first	first = Synchronization using first beam last = Synchronization using last beam

Table 8: Configuration values for transmitter

4 Mounting and commissioning

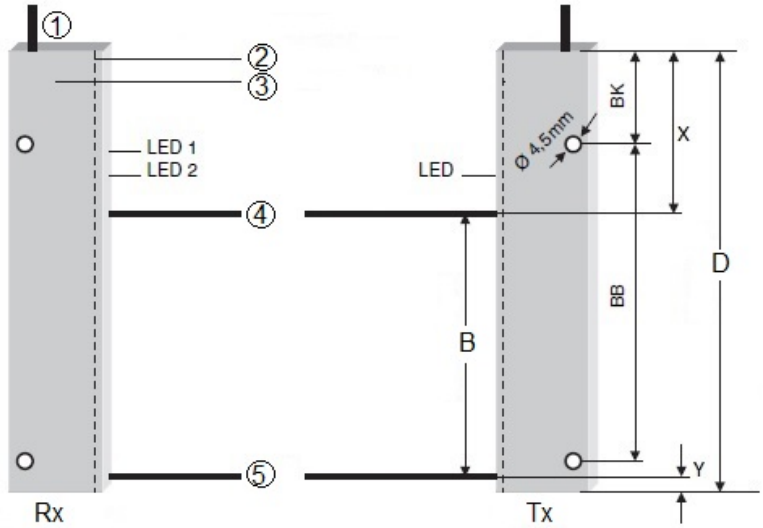

Legend:
1 M8 connector/connection cable
2 Front screen
3 Aluminum housing
4 First beam
5 Last beam

Figure 4: Mounting the CSL 505 switching light curtain

You will find the dimensions in: Table 14: "Dimensions CSL 505" on page 37 or Table 15: "Dimensions of CSL 505, special variant "VB"" on page 39.

	NOTE
	• Do not mechanically load, bend or warp the bars. • Protect the cable from being crushed and from exposure to strong electromagnetic effects. • Increased risk of soiling if mounted horizontally! Dirt and liquids on the front screen can be detected as an object and may penetrate into the device. • Mount the transmitter and receiver at the same height or with the same housing reference edge, free of tension and with the base in full contact with the mounting surface. • The optical surfaces of transmitter and receiver must be parallel to and opposite one another. • The transmitter and receiver connections must point in the same direction. • For horizontally mounted measuring light curtains with lengths of more than 2,000 mm, use an additional mounting bracket in the middle of the light curtain. • Secure transmitter and receiver against turning or sliding. • No reflective surfaces, no mutual interference! • There must be no reflecting surfaces near the light curtain. Otherwise objects may not be detected due to the reflection. • Avoid influences caused by other optical sensors through suitable positioning and partitioning. • Avoid strong extraneous light effect (caused for example by strobe lights, direct sunshine) on the receiver bar.

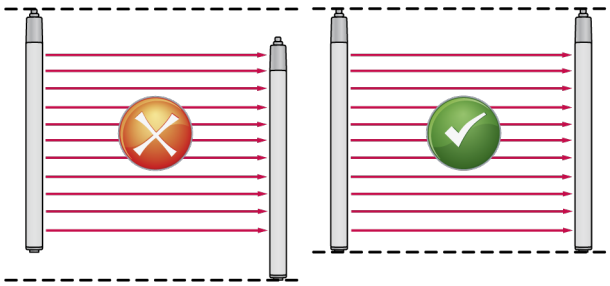

Checking mounting height

Are the transmitter and receiver mounted at the same height?

- Check the distance relative to the reference level (e.g. measure the distance from the floor or from the machine table)

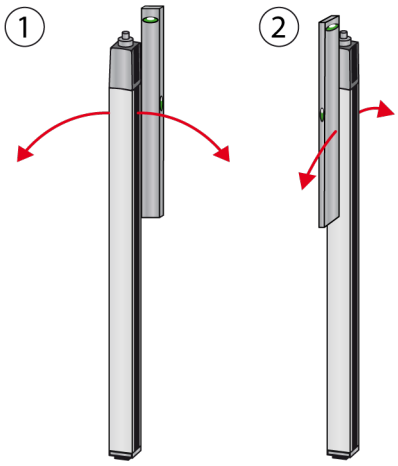

Checking that devices are mounted vertically

Are the devices mounted vertically?

1. Hold a level against the front screen
   - Check the vertical alignment
2. Hold a level against the side panel
   - Check the vertical alignment

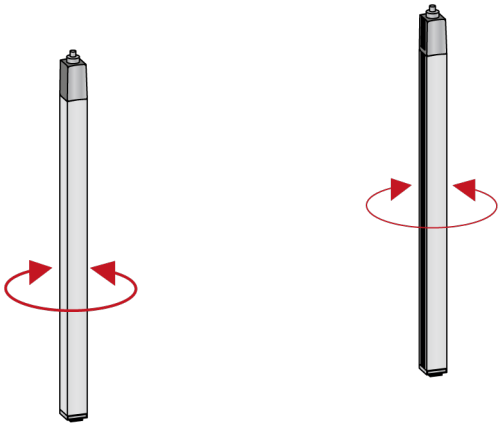

Checking alignment of transmitter and receiver

The following steps must be performed for the transmitter **and** receiver.

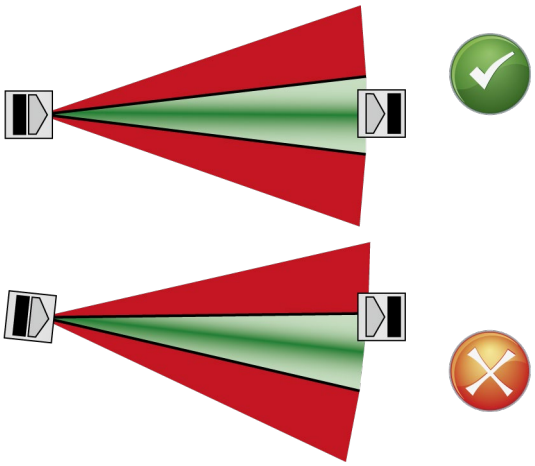

Rotating transmitter from left to right

The LED on the receiver indicates whether a signal is being received:

- Green*: The safety sensor is ready for use (green area)
- Red: The safety sensor is not ready for use

↳ Determine the limits of the green area by rotating the devices

↳ Align the device to the center of the green area

* Yellow, with activated start interlock

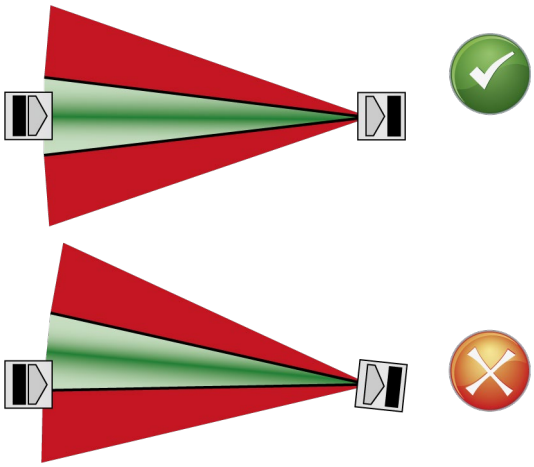

Rotating receiver from left to right

The LED on the receiver indicates whether a signal is being received:

- Green*: The safety sensor is ready for use (green area)
- Red: The safety sensor is not ready for use

↳ Determine the limits of the green area by rotating the devices

↳ Align the device to the center of the green area

* Yellow, with activated start interlock

The CSL 505 switching light curtain is ready for operation maximum 1.5 seconds after the receiver is switched on.

4.1 Electrical connection

1. Bars must only be connected while there is no voltage in the system.
2. Avoid ground loops; all bars must have the same grounding potential.
3. A potential difference of 60 V between the bar housing and the supply voltage must not be exceeded.
4. Insulate unused wires.

4.1.1 M8 connector variant

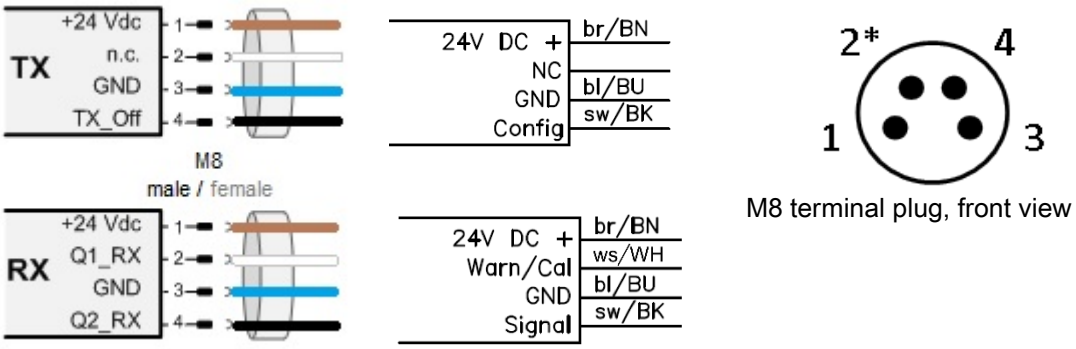

Figure 5: M8 connector version, open cable end

Pin	Tx	Rx
1, 3	+24 V DC, GND	
2*	n.c.	Dark switching
4	Tx_Off	Light switching

* Used for the teach event

By reversing the polarity of the supply voltages on the transmitter and receiver, it is possible to switch between predefined device functions:

	Pin 1	Pin 3	Description
Transmitter	+24 V DC	GND	Extended operating range: 1000 … 5000 mm
	GND	+24 V DC	Reduced operating range: 300 … 1300 mm

	Pin 1	Pin 3	Description
Receiver	+24 V DC	GND	Only parallel beams
	GND	+24 V DC	Parallel and diagonal beams

The depicted assignments are standard settings. The assigned functions can be freely configured.

4.2 Teach event

The teach behavior is dependent on the set operating mode. Three different operating modes are available (automatic, PNP or NPN). These differ in the way that the input pins must be connected in order to start a teach event.

Note that pins 2 and 4 can be both input as well as output pins.

Whether a teach event is started is always decided on the basis of the pinning during start-up. If no voltage is applied to pin 2 or pin 4, the light curtain always starts in process mode.

4.2.1 Teach modes

Automatic mode (factory setting)

In automatic mode, it makes no difference whether pin 2 or pin 4 is used as the teach input. Both are possible. It is recommended that pin 2 be used as the switching input since pin 4 is used as the switching output in process mode.

Process mode:	Teach:
Pin 2: GND	Pin 2: +24V or GND
Pin 4: GND	Pin 4: GND or +24V

PNP setting

In PNP mode, only pin 2 is used to activate the teach event. During start-up of the CSL505, a check is performed to determine whether a 24V voltage is applied to pin 2. If this is the case, the teach event starts.

Process mode:	Teach:
Pin 2: GND	Pin 2: +24V
Pin 4: GND	Pin 4: GND

NPN setting

In NPN mode, only pin 4 is used to activate the teach event. During start-up of the CSL505, a check is performed to determine whether a 24V voltage is applied to pin 4. If this is the case, the teach event starts.

Process mode:	Teach:
Pin 2: GND	Pin 2: GND
Pin 4: GND	Pin 4: +24V

Please only use the described connection logic. Other bit patterns are not supported.

4.2.2 Teach behavior

Automatic mode

1. When applying the voltage supply, connect pin 2 or pin 4 of the receiver bar to + 24 V DC.

   => Teach event starts (flashing signals different to those in normal operation)

2. A successful teach event is displayed by both LEDs as follows:

   LED1: continuous light
   LED2: double flashing
   The first valid teach values are stored.

3. Exit teach mode by completely disconnecting the voltage supply. Before the next start, the voltage at pin 2 or pin 4 must also be disconnected.

Example of practical implementation:

1. Insert a bridge between the connection of pin 2 and the supply voltage (+24 V DC).
2. Make sure that the monitoring range is free.
3. Switch on the operating voltage.
4. Switch off the operating voltage.
5. Remove the bridge.

PNP, switching

1. When applying the voltage supply, connect pin 2 of the receiver bar to + 24 V DC.

   => Teach event starts (flashing signals different to those in normal operation)

2. A successful teach event is displayed by both LEDs as follows:

   LED1: continuous light
   LED2: double flashing
   The first valid teach values are stored.

3. Exit teach mode by completely disconnecting the voltage supply. Before the next start, the voltage at pin 2 must also be disconnected.

NPN, switching

1. Connect pin 4 of the receiver to either an NPN digital input or to 24 V DC.
2. Connect pin 2 of the receiver to 0 V DC and switch on the device.
   => The teach event starts (this is indicated by flashing LEDs; different from the normal operating mode)
3. A successful teach event is displayed by both LEDs as follows:

   LED1: continuous light
   LED2: double flashing

   The first valid teach values are stored.

4. Exit teach mode by disconnecting the voltage supply and disconnecting pin 4 from voltage.

NOTE	
	• The teach event is important for ensuring the function of the CSL 505 switching light curtain • The teach event always occurs at the receiver • Transmitter and receiver must be optimally aligned with one another for maximum performance reserve • Perform the teach event after every change to the light curtain • For an error-free teach event, the monitoring range must be clear. • The description for automatic blanking during the teach event (auto blanking) can be found on page 13 section 3.5.5.2 "Automatic blanking during teach event (auto blanking)"

The teach event is different for devices with year of construction before 40/2017 and after 40/2017 (calendar week/year). The year of construction is listed on the device name plate:

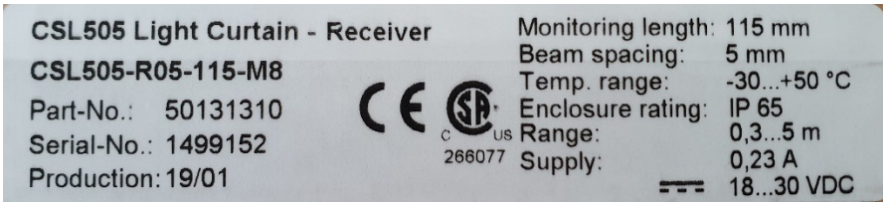

The older devices are equipped with firmware version up to and including V2.21. The newer devices are equipped with firmware version beginning with V2.22.

Flash codes during teach event

One LED flashes	Defective beams	One LED flashes
LEDs flash in phase	Differences too great or not yet calibrated. Check the alignment of the transmitter and receiver and the monitoring range.	LEDs flash in phase
LEDs flash out of phase	The self test has not detected any faults.	LEDs flash out of phase

Table 9: Flash codes during teach event

4.2.3 Teach event for devices prior to 40/2017 (firmware version up to V.2.21)

The firmware version is displayed in the lower right area of the configuration software if the light curtain is connected to the software, see Figure 3.

With this firmware version, the "Power-up teach delay" parameter – stored in the firmware as $(AutoCalDelay) – is set to the following value at the factory:

$(AutoCalDelay) = 0

Execution of teach event:

1. Make sure that the monitoring range of the light curtain is free.
2. Switch pin 4 (Q2_RX) to either GND or potential-free.
3. On the receiver, switch pin 2 (Q1_RX) to +24 VDC.
4. Switch on the device by connecting pin 1 to +24 VDC and pin 3 to GND.
5. In the switched on state, remove the voltage from pin 2 (Q1_RX).
6. The LEDs indicate a successful teach as follows:
   LED1: continuous light
   LED2: 1x flashing

4.2.4 Teach event for devices after 40/2017 (firmware version starting with V2.22)

The firmware version is displayed in the lower right area of the configuration software if the light curtain is connected to the software, see Figure 3.

With this firmware version, the "Power-up teach delay" parameter – stored in the firmware as $(AutoCalDelay) – is set to the following value at the factory:

$(AutoCalDelay) = 254

Execution of teach event:

1. On the receiver, switch pin 2 (Q1_RX) to +24 VDC.
2. Switch on the device by connecting pin 1 to +24 VDC and pin 3 to GND.
3. Continuous lighting of LED 1 and double flashing of LED 2 show: teach event has been successfully completed.
4. Switch off the device.
5. On the receiver, disconnect pin 2 (Q1_RX) from +24 VDC.

4.2.5 Optional teach-in adapter

If multiple light curtains are installed at the same time, teach-in adapter PA1/XTSX-M12 (part number: 50124709) simplifies the teach event enormously. It is connected between receiver and connection cable.

Connection cable	Adapter cable (Part no. 50116738)	Teach-in adapter (Part no. 50124709)	Adapter cable (Part no. 50107276)	Receiver
M8 cable 4-pin, female	M8 4-pin, male to M12 4-pin, female	PA1/XTSX-M12	M12 4-pin, male to M8 4-pin, female	M8 connector 4-pin, male

Pressing the button on the adapter switches the supply voltage to pin 2.

After the teach event, the adapter is removed and the device plugged directly back into the connection cable.

4.3 LED indicators/Error diagnostics

If the CSL 505 switching light curtain detects a fault, the LEDs show one of the following error codes. Depending on the output assignment and output function, a warning output may be evaluated.

As soon as the cause of the fault is rectified, the warning output becomes inactive again.

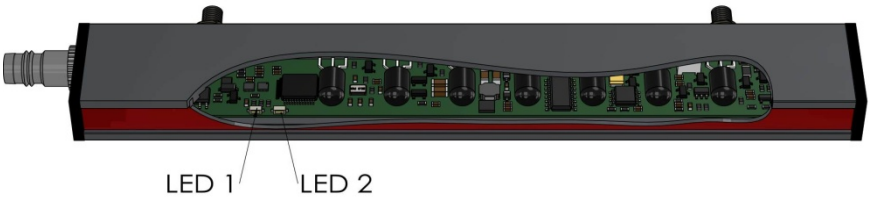

Figure 6: LED indicators/Error diagnostics

4.3.1 Receiver bar

LED 1	LED 2	Operating state	Monitoring area
Off	Off	Off	Unknown
On	On	Ready	Free
On	Off	Ready	Beam interrupted
Flashes	On	Minor error	Free
Flashes	Off	Minor error	Beam interrupted
Flashes (double)	Off	Configuration error	Unknown
Flashes	Flashes (in phase)	Serious error	Unknown
Flashes	Flashes (out of phase)	Serious error	Unknown
Continuous light	Double flashing	Teach event successful	Free

Table 10: LED indicators of receiver bar

Minor error:

The CSL 505 switching light curtain continues to operate but with reduced functionality, e.g. beam blanking; soiling alarm *Relative switching threshold: Warn*.

Serious error:

The CSL 505 switching light curtain no longer functions.

4.3.2 Transmitter bar

LED	Operating state
Off	Off
On	Ready
Flashes	Error

Table 11: LED indicators of transmitter bar

Make sure that the values for *Last beam* and *Synchronization beam* are correctly set and identical in the receiver and transmitter.

ПРОМЭЛЕКТРОНИКА / sales@prom-elec.com

4.4 Substitution of Vario B

The CSL505 switching light curtain enables a smooth substitution of Vario B.

4.4.1 Receiver bar

In existing installations with a dark-switching Vario B PNP-type or a light-switching Vario B NPN-type, pin 2 of the CSL505 receiver must be used instead of pin 4.

In existing installations with a Vario B diagonal-beam type, the CSL505 switching light curtain must be connected with the polarity of the voltage supply reversed at pin 1 and pin 3.

4.4.2 Transmitter bar

In existing installations with all Vario B types, the function assignment of the electrical connection remains unchanged on the transmitter bar.

5 Maintenance

The CSL 505 switching light curtain does not require regular maintenance.
If the front cover should become soiled, clean it with a moist cloth.

- Do not use any cleaners which contain solvents to clean.
- Do not use any high-pressure cleaners or steam jet cleaners
- When cleaning, take care not to scratch the front cover
- If necessary, realign the light curtain and perform the teach event again.

6 Technical data

6.1 General specifications

Optical data	
Operating range	Approx. 300 … 5000 mm[3] (teach event mandatory) Factory presetting: approx. 4 m Operating range can be set by reversing polarity: Approx. 300 … 1300 mm (reduced operating range) or Approx. 1000 … 5000 mm (extended operating range)
Maximum number of beams	160 logical beams
Time behavior	
Response time	Cycle time approx. 1 ms per beam plus basic time (approx. 4 ms). After interruption of synchronization beam approx. 1-2 cycles.
Delay time at power-up	Approx. 810 ms + 1-2 cycles
Electrical data	
Operating voltage	18 to 30 V DC with max. 10 % ripple. Use reverse-polarity protected, grounded voltage supply!
Power consumption	Extended operating range: Nominal 3.1 W, peak 6.5 W (2 MHz, 100 µs) Reduced operating range: Nominal 1.3 W, peak 2.3 W (2 MHz, 100 µs)
Switch-on current	Max. 7.5 A, 40 µs
Outputs	Push-pull switching current max. 150 mA
Input of transmitter	Positive switching; permissible input voltage 0 to 30 V DC Input resistance typ. 6 kΩ; switching threshold typ. 4 V
Protective circuit	Polarity reversal protection, short circuit protection, inductive protection for all outputs
Mechanical data	
Light curtain housing	Aluminium, natural anodising, front cover made of plastic, dark red.
Connection	Receiver: M8 plug, 4-pin Transmitter: M8 plug, 4-pin
Protection class	IP 65
Environmental data	
Operating temperature	-30 °C to +50 °C
Storage temperature	-40 °C to +65 °C
Elevation	< 2000 m
Degree of contamination	2

[3] approx. 1000 … 10000 mm for -ER model

6.2 Nomenclature

Part designation: CSLbbb-fss-xxxx-vv-ee

CSL	Operating principle: switching light curtain
bbb	Series: 505 for CSL 505
f	Function classes: T: Transmitter R: Receiver
ss	Beam spacing: 05: 5 mm 12.5: 12.5 mm 25: 25 mm 50: 50 mm 100: 100 mm
xxxx	Measurement field length [mm], dependent on beam spacing: Values, see tables
vv	Special variant: VB: Profile and mounting system compatible with VARIO B
ee	Electrical connection: M8: M8 connector xxxx: length of the cable tail in mm

Table 12: Part number code

6.3 Dimensioned drawings

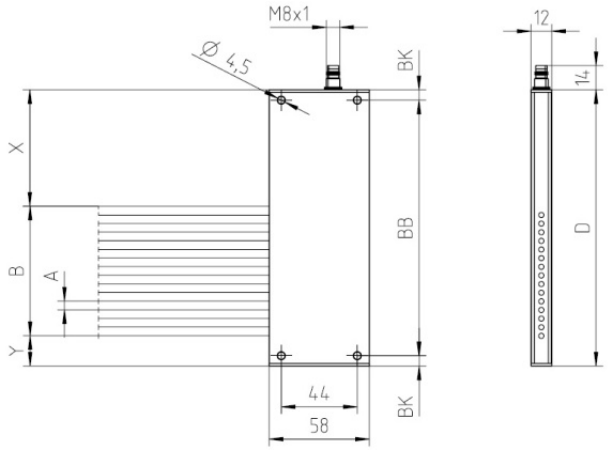

Figure 7: CSL 505 with beam spacing 5 mm

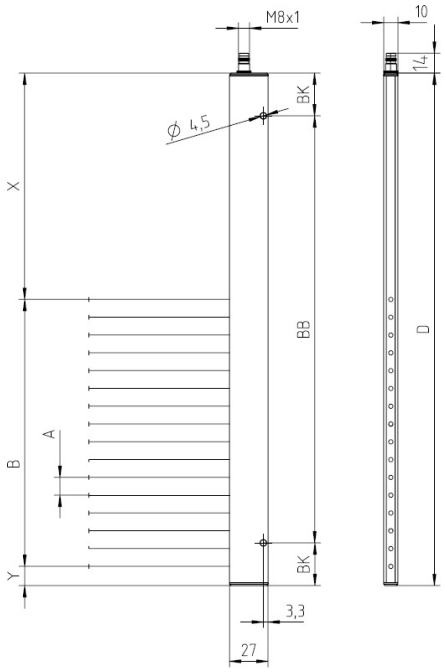

Figure 8: CSL 505 with beam spacing > 5 mm

6.4 Dimensions

The housings have the following dimensions:

Beam spacing	Width (mm)	Depth (mm)
5 mm	12	58
12.5 / 25 / 50 / 100 mm	10	27

Table 13: Dimensions housing

Dimensions CSL 505:

Designation	Beam spacing A	Number of beams	Measurement field length B	Profile length D	AB	Dimension BB	Dimension BK	Dimension Y	Dimension X
CSL505-R05-35-M8 CSL505-T05-35-M8	5	8	35	120	4	108	6	17.5	67.5
CSL505-R05-75-M8 CSL505-T05-75-M8	5	16	75	160	4	148	6	17.5	67.5
CSL505-R05-115-M8 CSL505-T05-115-M8	5	24	115	200	4	188	6	17.5	67.5
CSL505-R05-155-M8 CSL505-T05-155-M8	5	32	155	240	4	228	6	17.5	67.5
CSL505-R05-195-M8 CSL505-T05-195-M8	5	40	195	280	4	268	6	17.5	67.5
CSL505-R05-195-4000[4] CSL505-T05-195-4000	5	40	195	280	4	268	6	17.5	67.5
CSL505-R05-235-M8 CSL505-T05-235-M8	5	48	235	320	4	308	6	17.5	67.5

[4] with 4 m cable tail

Designation	Beam spacing A	Number of beams	Measurement field length B	Profile length D	AB	Dimension BB	Dimension BK	Dimension Y	Dimension X
CSL505-R05-275-M8 CSL505-T05-275-M8	5	56	275	360	4	348	6	17.5	67.5
CSL505-R05-315-M8 CSL505-T05-315-M8	5	64	315	400	4	388	6	17.5	67.5
CSL505-R05-355-M8 CSL505-T05-355-M8	5	72	355	440	4	428	6	17.5	67.5
CSL505-R05-395-M8 CSL505-T05-395-M8	5	80	395	480	4	468	6	17.5	67.5
CSL505-R12.5-88-M8 CSL505-T12.5-88-M8	12.5	8	88	150	2	100	25	13.5	48.5
CSL505-R12.5-188-M8 CSL505-T12.5-188-M8	12.5	16	188	250	2	100	75	13.5	48.5
CSL505-R12.5-288-M8 CSL505-T12.5-288-M8	12.5	24	288	350	2	200	75	13.5	48.5
CSL505-R12.5-388-M8 CSL505-T12.5-388-M8	12.5	32	388	450	2	300	75	13.5	48.5
CSL505-R12.5-488-M8 CSL505-T12.5-488-M8	12.5	40	488	550	2	400	75	13.5	48.5
CSL505-R12.5-588-M8 CSL505-T12.5-588-M8	12.5	48	588	650	2	500	75	13.5	48.5
CSL505-R12.5-688-M8 CSL505-T12.5-688-M8	12.5	56	688	750	2	600	75	13.5	48.5
CSL505-R12.5-788-M8 CSL505-T12.5-788-M8	12.5	64	788	850	2	700	75	13.5	48.5
CSL505-R12.5-888-M8 CSL505-T12.5-888-M8	12.5	72	887.5	950	2	800	75	13.5	49.0
CSL505-R12.5-988-M8 CSL505-T12.5-988-M8	12.5	80	987.5	1050	3	400	125	13.5	49.0
CSL505-R25-175-M8 CSL505-T25-175-M8	25	8	175	250	2	100	75	20.0	55.0
CSL505-R25-275-M8 CSL505-T25-275-M8	25	12	275	350	2	200	75	20.0	55.0
CSL505-R25-375-M8 CSL505-T25-375-M8	25	16	375	450	2	300	75	20.0	55.0
CSL505-R25-475-M8 CSL505-T25-475-M8	25	20	475	550	2	400	75	20.0	55.0
CSL505-R25-575-M8 CSL505-T25-575-M8	25	24	575	650	2	500	75	20.0	55.0
CSL505-R25-675-M8 CSL505-T25-675-M8	25	28	675	750	2	600	75	20.0	55.0
CSL505-R25-775-M8 CSL505-T25-775-M8	25	32	775	850	2	700	75	20.0	55.0
CSL505-R25-875-M8 CSL505-T25-875-M8	25	36	875	950	2	800	75	20.0	55.0
CSL505-R25-975-M8 CSL505-T25-975-M8	25	40	975	1050	3	400	125	20.0	55.0

Designation	Beam spacing A	Number of beams	Measurement field length B	Profile length D	AB	Dimension BB	Dimension BK	Dimension Y	Dimension X
CSL505-R25-975-4000[5] CSL505-T25-975-4000-ER[5,6]	25	40	975	1050	3	400	125	20.0	55.0
CSL505-R25-1075-M8 CSL505-T25-1075-M8	25	44	1075	1150	3	500	75	20.0	55.0
CSL505-R25-1175-M8 CSL505-T25-1175-M8	25	48	1175	1250	3	500	125	20.0	55.0
CSL505-R25-1275-M8 CSL505-T25-1275-M8	25	52	1275	1350	3	600	75	20.0	55.0
CSL505-R25-1375-M8 CSL505-T25-1375-M8	25	56	1375	1450	3	600	125	20.0	55.0
CSL505-R25-1475-M8 CSL505-T25-1475-M8	25	60	1475	1550	4	400	175	20.0	55.0
CSL505-R25-1575-M8 CSL505-T25-1575-M8	25	64	1575	1650	4	500	75	20.0	55.0
CSL505-R25-1675-M8 CSL505-T25-1675-M8	25	68	1675	1750	4	500	125	20.0	55.0
CSL505-R25-1775-M8 CSL505-T25-1775-M8	25	72	1775	1850	4	500	175	20.0	55.0
CSL505-R25-1875-M8 CSL505-T25-1875-M8	25	76	1875	1950	4	600	75	20.0	55.0
CSL505-R25-1975-M8 CSL505-T25-1975-M8	25	80	1975	2050	4	600	125	20.0	55.0
CSL505-R25-2175-M8 [7] CSL505-T25-2175-M8 [7]	25	88	2175	2250	5	500	125	20.0	55.0
CSL505-R25-2375-M8 [7] CSL505-T25-2375-M8 [7]	25	96	2375	2450	5	520	185	20.0	55.0
CSL505-R50-350-M8 CSL505-T50-350-M8	50	8	350	430	2	300	65	20.0	60.0
CSL505-R50-750-M8 CSL505-T50-750-M8	50	16	750	830	2	700	65	20.0	60.0
CSL505-R50-1150-M8 CSL505-T50-1150-M8	50	24	1150	1230	3	500	115	20.0	60.0
CSL505-R50-1550-M8 CSL505-T50-1550-M8	50	32	1550	1630	4	500	65	20.0	60.0
CSL505-R50-1950-M8 CSL505-T50-1950-M8	50	40	1950	2030	4	600	115	20.0	60.0
CSL505-R50-2350-M8 CSL505-T50-2350-M8	50	48	2350	2430	5	520	175	20.0	60.0
CSL505-R50-2750-M8 CSL505-T50-2750-M8	50	56	2750	2830	6	500	165	20.0	60.0

[5] With 4 m cable tail

[6] With greater operating range

[7] These variants with special lengths have neither diagonal nor crossed-beam scanning.

Designation	Beam spacing A	Number of beams	Measurement field length B	Profile length D	AB	Dimension BB	Dimension BK	Dimension Y	Dimension X
CSL505-R50-3150-M8 CSL505-T50-3150-M8	50	64	3150	3230	6	600	115	20.0	60.0
CSL505-R100-700-M8 CSL505-T100-700-M8	100	8	700	780	2	700	40	20.0	60.0
CSL505-R100-1100-M8 CSL505-T100-1100-M8	100	12	1100	1180	3	500	90	20.0	60.0
CSL505-R100-1500-M8 CSL505-T100-1500-M8	100	16	1500	1580	4	500	40	20.0	60.0
CSL505-R100-1900-M8 CSL505-T100-1900-M8	100	20	1900	1980	4	600	90	20.0	60.0
CSL505-R100-2300-M8 CSL505-T100-2300-M8	100	24	2300	2380	5	520	150	20.0	60.0
CSL505-R100-2700-M8 CSL505-T100-2700-M8	100	28	2700	2780	6	500	140	20.0	60.0
CSL505-R100-3100-M8 CSL505-T100-3100-M8	100	32	3100	3180	6	600	90	20.0	60.0

Table 14: Dimensions CSL 505

Legend:

AB	Number of bore holes	Y	Distance housing edge - last beam
BK	Bore hole to profile edge	X	Distance housing edge - first beam (connection)
BB	Bore hole to bore hole		Profile length D = X + measurement field length + Y
	all dimensions in mm		Tolerance of the beam positions: ± 2mm

The following dimensions are applicable for special variant "VB":

Designation	Beam spacing A	Number of beams	Measurement field length B	Profile length D	AB	Dimension BB	Dimension BK	Dimension Y	Dimension X
CSL505-R12.5-88-VB-M8 CSL505-T12.5-88-VB-M8	12.5	8	87.5	260	2	200	30	13.5	159
CSL505-R12.5-188-VB-M8 CSL505-T12.5-188-VB-M8	12.5	16	187.5	360	2	300	30	13.5	159
CSL505-R12.5-288-VB-M8 CSL505-T12.5-288-VB-M8	12.5	24	287.5	460	2	300	80	13.5	159
CSL505-R12.5-388-VB-M8 CSL505-T12.5-388-VB-M8	12.5	32	387.5	560	2	400	80	13.5	159
CSL505-R12.5-488-VB-M8 CSL505-T12.5-488-VB-M8	12.5	40	487.5	660	2	500	80	13.5	159
CSL505-R12.5-588-VB-M8 CSL505-T12.5-588-VB-M8	12.5	48	587.5	760	2	700	30	13.5	159
CSL505-R12.5-688-VB-M8 CSL505-T12.5-688-VB-M8	12.5	56	687.5	860	2	700	80	13.5	159
CSL505-R12.5-788-VB-M8 CSL505-T12.5-788-VB-M8	12.5	64	787.5	960	3	400	80	13.5	159
CSL505-R25-175-VB-M8 CSL505-T25-175-VB-M8	25	8	175	360	2	300	30	20	165
CSL505-R25-375-VB-M8 CSL505-T25-375-VB-M8	25	16	375	560	2	400	80	20	165

Designation	Beam spacing A	Number of beams	Measurement field length B	Profile length D	AB	Dimension BB	Dimension BK	Dimension Y	Dimension X
CSL505-R25-575-VB-M8 CSL505-T25-575-VB-M8	25	24	575	760	2	700	30	20	165
CSL505-R25-775-VB-M8 CSL505-T25-775-VB-M8	25	32	775	960	3	400	80	20	165
CSL505-R25-975-VB-M8 CSL505-T25-975-VB-M8	25	40	975	1160	3	500	80	20	165
CSL505-R25-1175-VB-M8 CSL505-T25-1175-VB-M8	25	48	1175	1360	3	600	80	20	165
CSL505-R25-1375-VB-M8 CSL505-T25-1375-VB-M8	25	56	1375	1560	4	500	30	20	165
CSL505-R25-1575-VB-M8 CSL505-T25-1575-VB-M8	25	64	1575	1760	4	500	130	20	165
CSL505-R25-1775-VB-M8 CSL505-T25-1775-VB-M8	25	72	1775	1960	4	600	80	20	165
CSL505-R25-2175-VB-M8 [8] CSL505-T25-2175-VB-M8 [8]	25	88	2175	2360	5	520	140	20	165
CSL505-R25-2375-VB-M8 [8] CSL505-T25-2375-VB-M8 [8]	25	96	2375	2560	5	600	80	20	165
CSL505-R50-350-VB-M8 CSL505-T50-350-VB-M8	50	8	350	560	2	400	80	20	190
CSL505-R50-750-VB-M8 CSL505-T50-750-VB-M8	50	16	750	960	3	400	80	20	190
CSL505-R50-1150-VB-M8 CSL505-T50-1150-VB-M8	50	24	1150	1360	3	600	80	20	190
CSL505-R50-1550-VB-M8 CSL505-T50-1550-VB-M8	50	32	1550	1760	4	500	130	20	190
CSL505-R50-1950-VB-M8 CSL505-T50-1950-VB-M8	50	40	1950	2160	5	500	80	20	190
CSL505-R50-2350-VB-M8 CSL505-T50-2350-VB-M8	50	48	2350	2560	5	600	80	20	190
CSL505-R50-2750-VB-M8 CSL505-T50-2750-VB-M8	50	56	2750	2960	5	700	80	20	190
CSL505-R50-3150-VB-M8 CSL505-T50-3150-VB-M8	50	64	3150	3360	5	800	80	20	190
CSL505-R100-700-VB-M8 CSL505-T100-700-VB-M8	100	8	700	970	3	400	85	20	250
CSL505-R100-1100-VB-M8 CSL505-T100-1100-VB-M8	100	12	1100	1370	3	600	85	20	250
CSL505-R100-1500-VB-M8 CSL505-T100-1500-VB-M8	100	16	1500	1770	4	500	135	20	250
CSL505-R100-1900-VB-M8 CSL505-T100-1900-VB-M8	100	20	1900	2170	5	500	85	20	250
CSL505-R100-2300-VB-M8 CSL505-T100-2300-VB-M8	100	24	2300	2570	5	600	85	20	250

[8] These variants with special lengths have neither diagonal nor crossed-beam scanning.

Designation	Beam spacing A	Number of beams	Measurement field length B	Profile length D	AB	Dimension BB	Dimension BK	Dimension Y	Dimension X
CSL505-R100-2700-VB-M8 CSL505-T100-2700-VB-M8	100	28	2700	2970	5	700	85	20	250
CSL505-R100-3100-VB-M8 CSL505-T100-3100-VB-M8	100	32	3100	3370	5	800	85	20	250

Table 15: Dimensions of CSL 505, special variant "VB"

Legend:	AB	Number of bore holes	Y	Distance housing edge - last beam
	BK	Bore hole to profile edge	X	Distance housing edge - first beam (connection)
	BB	Bore hole to bore hole		Profile length D = X + measurement field length + Y
		all dimensions in mm		Tolerance of the beam positions: ± 2mm

7 Accessories and scope of delivery

7.1 Accessories

Part no.	Part designation	Description
50132069	CSL505 interface	Programming interface for configuration incl. connection cable. CSL505 software available for download.
-	CSL505 software	Configuration software available for download at www.leuze.com

Table 16: Accessories

M8 connection cables in various lengths, sheathing material and design:

Part no.	Part designation	Description
50130848	KD U-M8-4A-V1-020	Connection cable: M8 socket, 4-pin, axial, PVC cable, length 2,000 mm, open cable end
50130850	KD U-M8-4A-V1-050	Connection cable: M8 socket, 4-pin, axial, PVC cable, length 5,000 mm, open cable end
50130871	KD U-M8-4W-V1-050	Connection cable: M8 socket, 4-pin, angled, PVC cable, length 5,000 mm, open cable end
50130851	KD U-M8-4A-V1-100	Connection cable: M8 socket, 4-pin, axial, PVC cable, length 10,000 mm, open cable end
50130853	KD U-M8-4A-V1-200	Connection cable: M8 socket, 4-pin, axial, PVC cable, length 20,000 mm, open cable end
50130854	KD U-M8-4A-P1-020	Connection cable: M8 socket, 4-pin, axial, PUR cable, length 2,000 mm, open cable end
50130856	KD U-M8-4A-P1-050	Connection cable: M8 socket, 4-pin, axial, PUR cable, length 5,000 mm, open cable end
50130875	KD U-M8-4W-P1-050	Connection cable: M8 socket, 4-pin, angled, PUR cable, length 5,000 mm, open cable end
50130857	KD U-M8-4A-P1-100	Connection cable: M8 socket, 4-pin, axial, PUR cable, length 10,000 mm, open cable end
50130876	KD U-M8-4W-P1-100	Connection cable: M8 socket, 4-pin, angled, PUR cable, length 20,000 mm, open cable end

Table 17: Connection cables

7.2 Scope of delivery

Transmitter and receiver both have their part number.

- Transmitter / receiver with supplementary sheet

These operating instructions (PDF file) can be downloaded from the Internet at www.leuze.de.

	NOTE
	Connection cables, interconnection cables, mounting brackets, etc. are not included in the scope of delivery and must be ordered separately.