Leuze electronic

the sensor people

AMS 301*i*

Optical Laser Measurement System
RS 485

en 03-2014/12 50113381
We reserve the right to
make technical changes

TECHNICAL DESCRIPTION

ПРОМЭЛЕКТРОНИКА / sales@prom-elec.com

© 2014
Leuze electronic GmbH + Co. KG
In der Braike 1
D-73277 Owen - Teck / Germany
Phone: +49 7021 573-0
Fax: +49 7021 573-199
http://www.leuze.com
info@leuze.de

The main menus

```
AMS 301i 120
Leuze electronic
      GmbH & Co. KG
SW: V 1.3.0   HW:1
SN: ----------------------
```

Device information - main menu

This menu item contains detailed information on
- Device model,
- Manufacturer,
- Software and hardware version,
- Serial number.

No entries can be made via the display.

```
Network information
Address:      ---
Data format:  8,n,1
Baudrate:     ---- kbit/s
```

Network information - main menu

Explanations of address, data format, baud rate.
No entries can be made via the display.

```
I01 LSR PLB        8
I02 TMP ATT        RS485
ERR
  + 87.000m
```

Status- and measurement data - main menu

- Display of status-, warning-, and error messages.
- Status overview of the switching inputs/outputs.
- Bar graph for the reception level.
- Activated interface.
- Measurement value.

No entries can be made via the display.
See "Indicators in the display" on page 37.

```
Parameter
  Parameter handling
  RS 485
  Position value
  I/O
  Other
```

Parameter - main menu

- Configuration of the AMS.

See "Parameter menu" on page 42.

```
Language selection
o Deutsch
● English
o Español
o Français
o Italiano
```

Language selection - main menu

- Selection of the display language.

See "Language selection menu" on page 45.

```
Service
  Status messages
  Diagnostics
  Expanded diagnostics
```

Service - main menu

- Display of status messages.
- Display of diagnostic data.

No entries can be made via the display.
See "Service menu" on page 46.

Device buttons:

- Navigate **upward/laterally**
- Navigate **downward/laterally**
- ESC **ESCAPE** leave
- **ENTER** confirm

Input of values

```
100
 <-0123456789     save
Standard ----- Unit
   126  |     |
```

- ◄ + ↵ **Delete character**
- 0...9 + ↵ **Enter digit**
- save + ↵ **Save input**

1 General information 4
1.1 Explanation of symbols 4
1.2 Declaration of conformity 4
1.3 Description of functions AMS 301*i* 5

2 Safety 6
2.1 Intended use 6
2.2 Foreseeable misuse 7
2.3 Competent persons 7
2.4 Disclaimer 8
2.5 Laser safety notices 8

3 Fast commissioning / operating principle 11
3.1 Mounting the AMS 301*i* 11
3.1.1 Mounting the device 11
3.1.2 Mounting the reflector 11
3.2 Connecting the voltage supply 12
3.3 Display 12
3.4 AMS 301*i* on the RS 485 12

4 Specifications 13
4.1 Specifications of the laser measurement system 13
4.1.1 General specifications AMS 301*i* 13
4.1.2 Dimensioned drawing AMS 301*i* 15
4.1.3 Type overview AMS 301*i* 16

5 Installation and mounting 17
5.1 Storage, transportation 17
5.2 Mounting the AMS 301*i* 18
5.2.1 Optional mounting bracket 20
5.2.2 Parallel mounting of the AMS 301*i* 21
5.2.3 Parallel mounting of AMS 301*i* and DDLS optical data transmission 22
5.3 Mounting the AMS 301*i* with laser beam deflector unit 23
5.3.1 Mounting the laser beam deflector unit With integrated mounting bracket 23
5.3.2 Dimensioned drawing of US AMS 01 deflector unit 24
5.3.3 Mounting the US 1 OMS deflector unit without mounting bracket 25

6 Reflectors 26

6.1 General information 26

6.2 Description of the reflective tape 26
6.2.1 Specifications of the self-adhesive foil 27
6.2.2 Specifications of the reflective tape on a metal plate 27
6.2.3 Dimensioned drawing of reflective tape on a metal plate 28
6.2.4 Specifications of heated reflectors 29
6.2.5 Dimensioned drawing of heated reflectors 30

6.3 Selecting reflector sizes 31

6.4 Mounting the reflector 32
6.4.1 General information 32
6.4.2 Mounting the reflector 32
6.4.3 Table of reflector pitches 35

7 Electrical connection 36

7.1 Safety notices for the electrical connection 36

7.2 PWR – voltage supply / switching input/output 37

7.3 RS 485 BUS IN 37

7.4 RS 485 BUS OUT 38

7.5 Service 38

8 Display and control panel AMS 301*i* 39

8.1 Structure of the control panel 39

8.2 Status display and operation 39
8.2.1 Indicators in the display 39
8.2.2 LED status displays 41
8.2.3 Control buttons 42

8.3 Menu description 43
8.3.1 The main menus 43
8.3.2 Parameter menu 44
8.3.3 Language selection menu 47
8.3.4 Service menu 48

8.4 Operation 48

9 RS 485 interface 50

9.1 General Information about the RS 485 interface 50

9.2 RS 485 electrical connection 50

9.3 RS 485 address entry 51
9.3.1 RS 485 address entry 51
9.4 RS 485 interface data 52
9.4.1 Default settings of the RS 485 interface 52
9.4.2 Parameter setting for AMS 301*i* 52
9.4.3 Communication protocol (binary protocol) 52

10 Diagnostics and troubleshooting 55
10.1 Service and diagnostics in the display of the AMS 301*i* 55
10.1.1 Status messages 55
10.1.2 Diagnostics 56
10.1.3 Expanded diagnostics 56
10.2 General causes of errors 57
10.2.1 Power LED 57
10.3 Interface errors. 57
10.3.1 BUS LED 57
10.4 Status display in the display of the AMS 301*i* 57

11 Type overview and accessories 59
11.1 Type key 59
11.2 Type overview AMS 301*i* (RS 485) 59
11.3 Overview of reflector types 60
11.4 Accessories 60
11.4.1 Accessory mounting bracket 60
11.4.2 Accessory deflector unit 60
11.4.3 Accessory M12 connector 60
11.4.4 Accessory terminating resistor 61
11.4.5 Accessory ready-made cables for voltage supply 61
11.4.6 Accessory ready-made cables for RS 485 62

12 Maintenance 65
12.1 General maintenance information 65
12.2 Repairs, servicing 65
12.3 Disassembling, packing, disposing 65

1 General information

1.1 Explanation of symbols

The symbols used in this operating manual are explained below.

Attention!

This symbol precedes text messages which must strictly be observed. Failure to comply with this information results in injuries to personnel or damage to the equipment.

Attention Laser!

This symbol warns of possible danger caused by hazardous laser radiation.

Notice!

This symbol indicates text passages containing important information.

1.2 Declaration of conformity

The AMS 301*i* absolute measuring optical laser measurement system was designed and manufactured in accordance with applicable European directives and standards.

The AMS series is "UL LISTED" according to American and Canadian safety standards and fulfills the requirements of Underwriter Laboratories Inc. (UL).

Notice!

The Declaration of Conformity for these devices can be requested from the manufacturer.

The manufacturer of the product, Leuze electronic GmbH + Co. KG in D-73277 Owen/Teck, possesses a certified quality assurance system in accordance with ISO 9001.

1.3 Description of functions AMS 301*i*

The AMS 301*i* optical laser measurement system calculates distances to fixed as well as moving system parts. The distance to be measured is calculated according to the principle of the propagation time of radiated light. Here, the light emitted by the laser diode is reflected by a reflector onto the receiving element of the laser measurement system. The AMS 301*i* uses the "propagation time" of the light to calculate the distance to the reflector. The high absolute measurement accuracy of the laser measurement system and the fast integration time are designed for position control applications.

With the AMS 3xx*i* product series, Leuze electronic makes available a range of internationally relevant interfaces. Note that each interface version listed below corresponds to a different AMS 3xx*i* model.

AMS 304*i*

AMS 348*i*

AMS 355*i*

AMS 358*i*

AMS 335*i*

AMS 338*i*

AMS 308*i*

AMS 384*i*

AMS 301*i*

AMS 300*i*

2 Safety

This sensor was developed, manufactured and tested in line with the applicable safety standards. It corresponds to the state of the art.

2.1 Intended use

The AMS is an absolute measuring optical laser measurement system which allows distance measurement of up to 300 m against a reflector.

Areas of application

The AMS is designed for the following areas of application:

- Positioning of automated, moving plant components
- Travel and lifting axes of high-bay storage devices
- Repositioning units
- Gantry crane bridges and their trolleys
- Lifts
- Electroplating plants

CAUTION

Observe intended use!

- Only operate the device in accordance with its intended use. The protection of personnel and the device cannot be guaranteed if the device is operated in a manner not complying with its intended use.
  Leuze electronic GmbH + Co. KG is not liable for damages caused by improper use.
- Read the technical description before commissioning the device. Knowledge of this technical description is an element of proper use.

NOTICE

Comply with conditions and regulations!

- Observe the locally applicable legal regulations and the rules of the employer's liability insurance association.

Attention

For UL applications, use is permitted exclusively in Class 2 circuits according to NEC (National Electric Code).

2.2 Foreseeable misuse

Any use other than that defined under "Intended use" or which goes beyond that use is considered improper use.

In particular, use of the device is not permitted in the following cases:

- Rooms with explosive atmospheres
- Circuits relevant to safety
- For medicinal purposes

NOTICE
Do not modify or otherwise interfere with the device. Do not carry out modifications or otherwise interfere with the device. The device must not be tampered with and must not be changed in any way. The device must not be opened. There are no user-serviceable parts inside. Repairs must only be performed by Leuze electronic GmbH + Co. KG.

2.3 Competent persons

Connection, mounting, commissioning and adjustment of the device must only be carried out by competent persons.

Prerequisites for competent persons:

- They have a suitable technical education.
- They are familiar with the rules and regulations for occupational safety and safety at work.
- They are familiar with the technical description of the device.
- They have been instructed by the responsible person on the mounting and operation of the device.

Certified electricians

Electrical work must be carried out by a certified electrician.

Due to their technical training, knowledge and experience as well as their familiarity with relevant standards and regulations, certified electricians are able to perform work on electrical systems and independently detect possible dangers.

In Germany, certified electricians must fulfill the requirements of accident-prevention regulations BGV A3 (e.g. electrician foreman). In other countries, there are respective regulations that must be observed.

2.4 Disclaimer

Leuze electronic GmbH + Co. KG is not liable in the following cases:

- The device is not being used properly.
- Reasonably foreseeable misuse is not taken into account.
- Mounting and electrical connection are not properly performed.
- Changes (e.g., constructional) are made to the device.

2.5 Laser safety notices

ATTENTION LASER RADIATION – LASER CLASS 2

Never look directly into the beam!

The device satisfies the requirements of IEC 60825-1:2007 (EN 60825-1:2007) safety regulations for a product in **laser class 2** as well as the U.S. 21 CFR 1040.10 regulations with deviations corresponding to "Laser Notice No. 50" from June 24th, 2007.

- Never look directly into the laser beam or in the direction of reflecting laser beams.
  If you look into the beam path over a longer time period, there is a risk of injury to the retina.
- Do not point the laser beam of the device at persons!
- Interrupt the laser beam using a non-transparent, non-reflective object if the laser beam is accidentally directed towards a person.
- When mounting and aligning the device, avoid reflections of the laser beam off reflective surfaces!
- CAUTION! The use of operating or adjusting devices other than those specified here or carrying out of differing procedures may lead to dangerous exposure to radiation.
- Adhere to the applicable legal and local regulations regarding protection from laser beams.
- The device must not be tampered with and must not be changed in any way.
  There are no user-serviceable parts inside the device.
  Repairs must only be performed by Leuze electronic GmbH + Co. KG.

NOTICE

Affix laser information and warning signs!

Laser information and warning signs are attached to the device (see figure 2.1):

In addition, self-adhesive laser warning and information signs (stick-on labels) are supplied in several languages (see figure 2.2).

- Affix the laser information sheet to the device in the language appropriate for the place of use.

  When using the device in the US, use the stick-on label with the "Complies with 21 CFR 1040.10" notice.
- Affix the laser information and warning signs near the device if no signs are attached to the device (e.g., because the device is too small) or if the attached laser information and warning signs are concealed due to the installation position.

  Affix the laser information and warning signs so that they are legible without exposing the reader to the laser radiation of the device or other optical radiation.

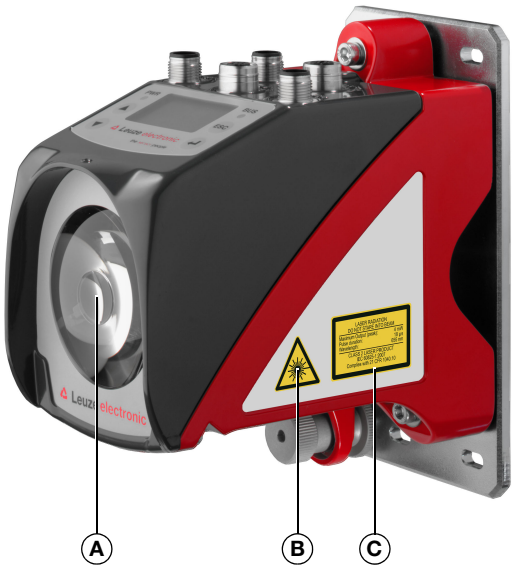

A Laser aperture
B Laser warning sign
C Laser information sign with laser parameters

Figure 2.1: Laser apertures, laser warning signs

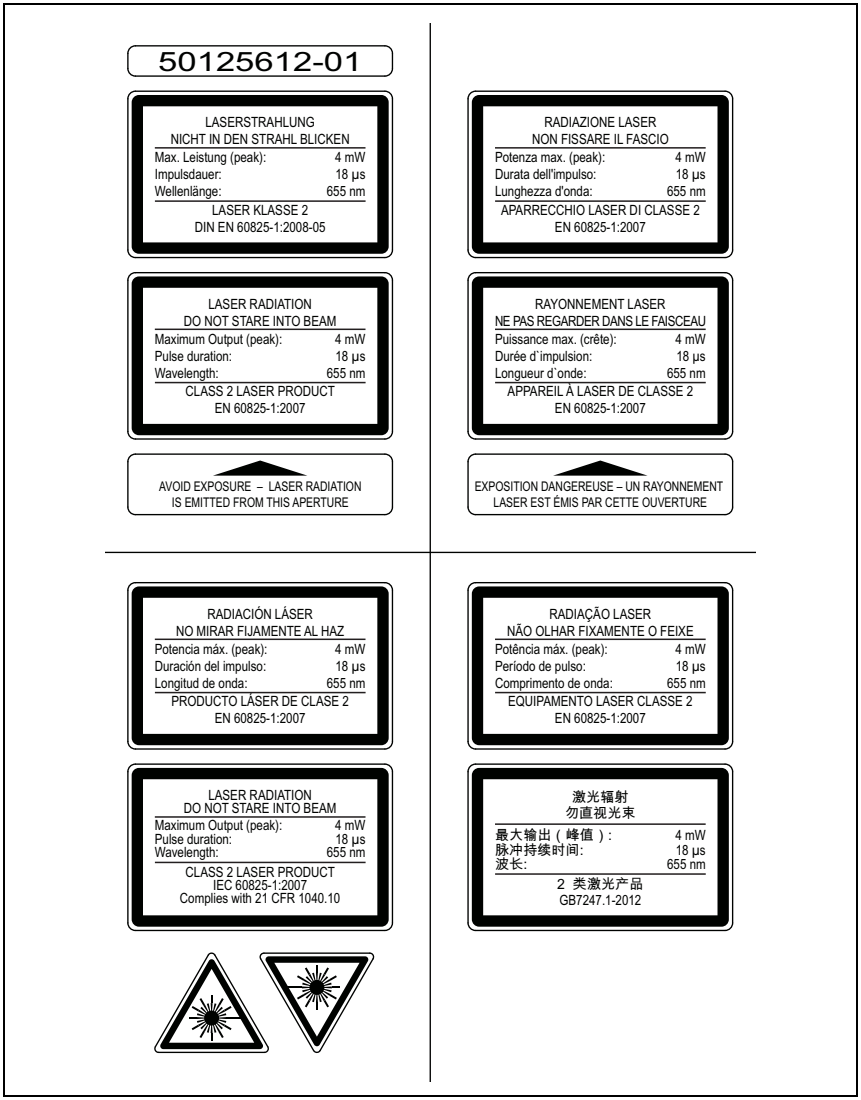

Figure 2.2: Laser warning and information signs – supplied stick-on labels

3 Fast commissioning / operating principle

Notice!

*Below, you will find a **short description for the initial commissioning** of the AMS 301i. Detailed explanations for the listed points can be found throughout the handbook.*

3.1 Mounting the AMS 301*i*

The AMS 301*i* and the corresponding reflector are mounted on two mutually opposing, plane-parallel, flat walls.

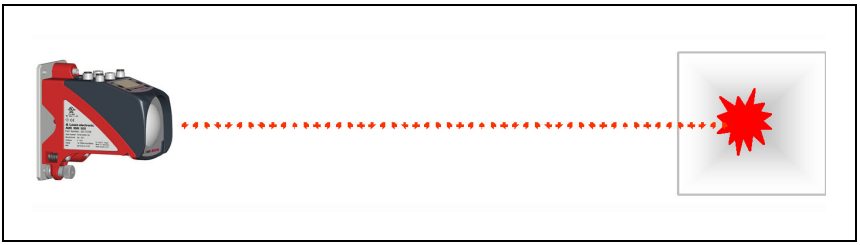

Figure 3.1: Schematic illustration of mounting

Attention!

For error-free position measurement, there must be an unobstructed line-of-sight between the AMS 301*i and the reflector.*

3.1.1 Mounting the device

The laser is mounted on a vertical wall using 4 screws (M5).

Alignment is performed using 2 adjustment screws. Adjust so that the laser light spot is positioned at the center of the reflector. The alignment is to be secured with the knurled nut and locked with the M5 nut.

Further information can be found in chapter 5.2 and chapter 5.3.

3.1.2 Mounting the reflector

The reflector is mounted on a vertical wall with 4 screws (M5). The reflector is angled using the included shims. Incline the reflector by approx. 1°.

Detailed information can be found in chapter 6.4.

3.2 Connecting the voltage supply

The laser measurement system is connected using M12 connectors. The voltage supply is connected via the PWR M12 connection.

Detailed information can be found in chapter 7.

3.3 Display

Once the laser measurement system is supplied with voltage, the device status as well as the measured position values can be read on the display. The display automatically switches to the display of the measurement values.

Use the up/down buttons ▲ ▼ to the left of the display to read and change a wide range of data and parameters.

Depending on connected interface, the network address or IP addresses must be configured via the display.

Detailed information can be found in chapter 8.

3.4 AMS 301*i* on the RS 485

The transmission parameters are listed above the menu structure or on the fold-out page at the end of the technical description.

The parameters can be adjusted after activation of parameter enabling.

Detailed information can be found in chapter 9.

4 Specifications

4.1 Specifications of the laser measurement system

4.1.1 General specifications AMS 301*i*

Measurement data	AMS 301*i* 40 (H)	AMS 301*i* 120 (H)	AMS 301*i* 200 (H)	AMS 301*i* 300 (H)
Measurement range	0.2 … 40 m	0.2 … 120 m	0.2 … 200 m	0.2 … 300 m
Accuracy	± 2 mm	± 2 mm	± 3 mm	± 5 mm
Consistency [1]	0.3 mm	0.5 mm	0.7 mm	1.0 mm
Light spot diameter	≤ 40 mm	≤ 100 mm	≤ 150 mm	≤ 225 mm
Measurement value output	1.7 ms			
Integration time	8 ms			
Resolution	adjustable, see chapter of the individual interfaces			
Temperature drift	≤ 0.1 mm/K			
Ambient temperature sensitivity	1 ppm/K			
Air pressure sensitivity	0.3 ppm/hPa			
Traverse rate	≤ 10 m/s			
Electrical data				
Supply voltage Vin [2]	18 … 30 VDC			
Current consumption	without device heating: ≤ 250 mA / 24 VDC with device heating: ≤ 500 mA / 24 VDC			
Optical data				
Transmitter	laser diode, red light, wavelength 650 … 690 nm			
Laser class	2 acc. to EN 60825-1, CDRH			
Interfaces				
RS 485 / baud rate in kbit/s	9.6 / 19.2 / 38.4 / 57.6 / 115.2			
Operating and display elements				
Keyboard	4 buttons			
Display	monochromatic graphical display, 128 x 64 pixels			
LED	2 LEDs, two-colored			

Inputs/outputs	
Quantity	2, programmable
Input	protected against polarity reversal
Output	max. 60 mA, short-circuit proof
Mechanical data	
Housing	cast zinc and aluminum
Optics	glass
Weight	approx. 2.45 kg
Protection class	IP 65 acc. to EN 60529 [3]
Environmental conditions	
Operating temperature	
without device heating	-5 °C … +50 °C
with device heating	-30 °C … +50 °C [4]
Storage temperature	-30 °C … +70 °C
Air humidity	max. 90 % rel. humidity, non-condensing
Mechanical/electrical loading capacity	
Vibrations	acc. to EN 60068-2-6
Noise	acc. to EN 60060-2-64
Shock	acc. to EN 60068-2-27
EMC	acc. to EN 61000-6-2 and EN 61000-6-4 [5]

1) Statistical error: 1 sigma; minimum switch-on time: 2 min.
2) For UL applications: only for use in "Class 2" circuits acc. to NEC.
3) With screwed-on M12 plugs or mounted caps.
4) With devices with heating, the switch on/off area of the internal heating can be extended to prevent condensation from forming. A 100% prevention of the formation of condensation cannot be guaranteed due to the limited heating capacity of the AMS 301*i*.
5) This is a Class A product. In a domestic environment this product may cause radio interference, in which case the operator may be required to take adequate measures.

The AMS 301*i* is designed in accordance with safety class III for supply with PELV (protective extra-low voltage).

4.1.2 Dimensioned drawing AMS 301*i*

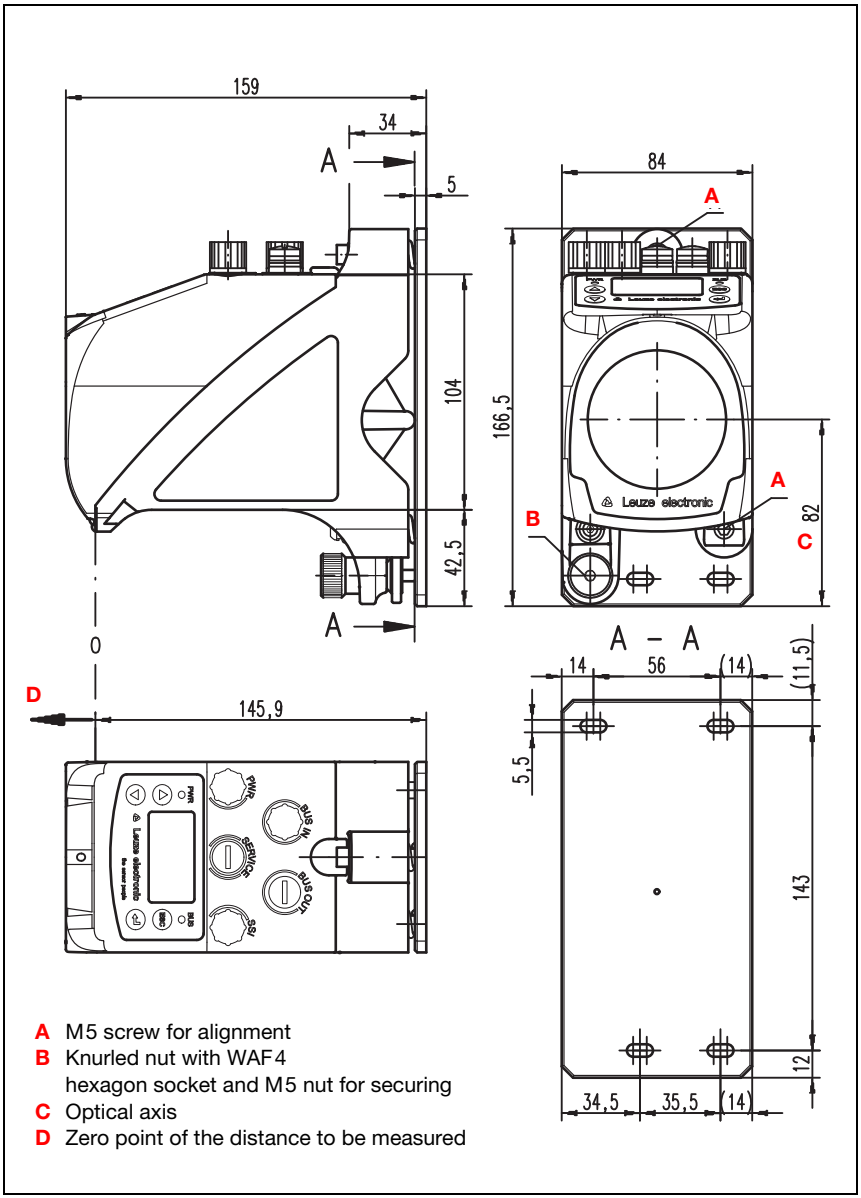

Figure 4.1: Dimensioned drawing AMS 301*i*

ПРОМЭЛЕКТРОНИКА / sales@prom-elec.com

4.1.3 Type overview AMS 301*i*

AMS 301i (RS 485)

Type designation	Description	Part no.
AMS 301*i* 40	40 m operating range, RS 485 interface	50113669
AMS 301*i* 120	120 m operating range, RS 485 interface	50113670
AMS 301*i* 200	200 m operating range, RS 485 interface	50113671
AMS 301*i* 300	300 m operating range, RS 485 interface	50113672
AMS 301*i* 40 H	40 m operating range, RS 485 interface, integrated heating	50113673
AMS 301*i* 120 H	120 m operating range, RS 485 interface, integrated heating	50113674
AMS 301*i* 200 H	200 m operating range, RS 485 interface, integrated heating	50113675
AMS 301*i* 300 H	300 m operating range, RS 485 interface, integrated heating	50113676

Table 4.1: Type overview AMS 301*i*

5 Installation and mounting

5.1 Storage, transportation

Attention!

When transporting or storing, package the device so that it is protected against collision and humidity. Optimum protection is achieved when using the original packaging. Heed the required environmental conditions specified in the technical data.

Unpacking

- *Check the packaging for any damage. If damage is found, notify the post office or shipping agent as well as the supplier.*
- *Check the delivery contents using your order and the delivery papers:*
  - Delivered quantity
  - Device type and model as indicated on the nameplate
  - Brief manual

The name plate provides information as to what AMS 301*i* type your device is. For specific information, please refer to chapter 11.2.

Name plates

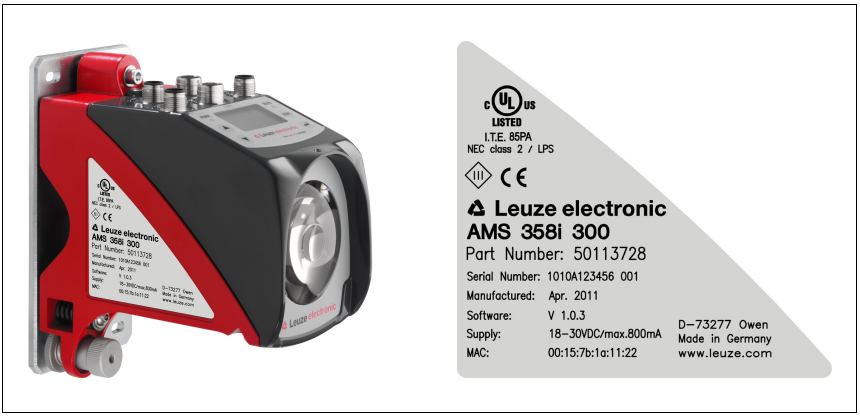

Figure 5.1: Device name plate using the AMS 300*i* as an example

Notice!

Please note that the shown name plate is for illustration purposes only; the contents do not correspond to the original.

- *Save the original packaging for later storage or shipping.*

If you have any questions concerning your shipment, please contact your supplier or your local Leuze electronic sales office.

Observe the applicable local regulations when disposing of the packaging materials.

5.2 Mounting the AMS 301*i*

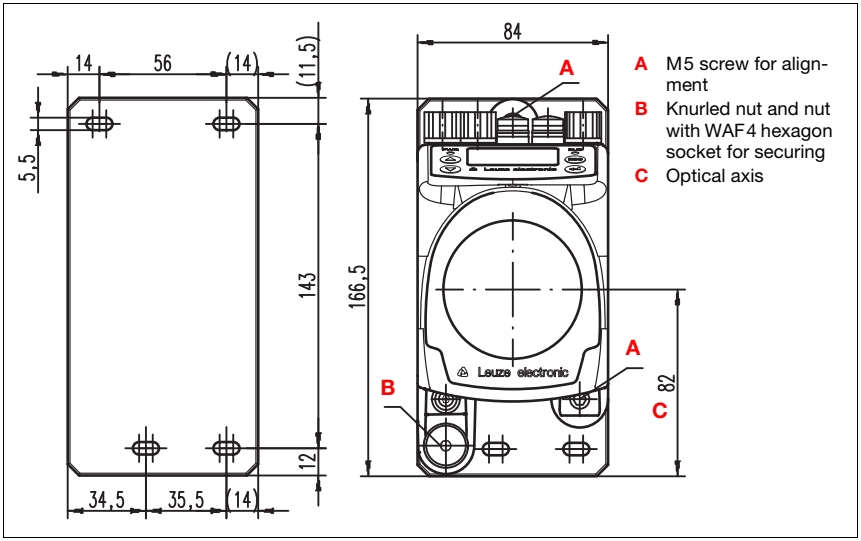

Figure 5.2: Mounting the device

The AMS 301*i* and the corresponding reflector are mounted on two mutually opposing, plane-parallel, flat walls or system parts. For error-free position measurement, there must be an unobstructed line-of-sight connection between the AMS 301*i* and the reflector.

Use M5 screws to fasten the laser measurement system. Secure the screws with a toothed lock washer to protect against loosening caused by vibrations.

Aligning the laser light spot in the center of the reflector

The laser light spot has to be aligned so that it always hits the center of the opposing reflector, both at close range as well as at the maximum measurement distance. **To align, use the two M5 Allen screws** ("**A**" in figure 5.2). When aligning please ensure that the knurled nut and the lock nut ("**B**" in figure 5.2) are opened wide.

Attention!

To prevent the laser measurement system from moving out of alignment during continuous operation, subsequently hand-tighten the knurled nut and counterlock with the nut with WAF4 hexagon socket ("B" in figure 5.2). Knurled nut and nut must not be tightened until alignment has been completed.

Attention!

The device must not be opened. Failure to comply will render the guarantee void. Warranted features cannot be guaranteed after the device has been opened.

5.2.1 Optional mounting bracket

A mounting bracket for mounting the AMS 301*i* on a flat, horizontal surface is available as an optional accessory.

Type designation:	MW OMS/AMS 01
Part no.:	50107255

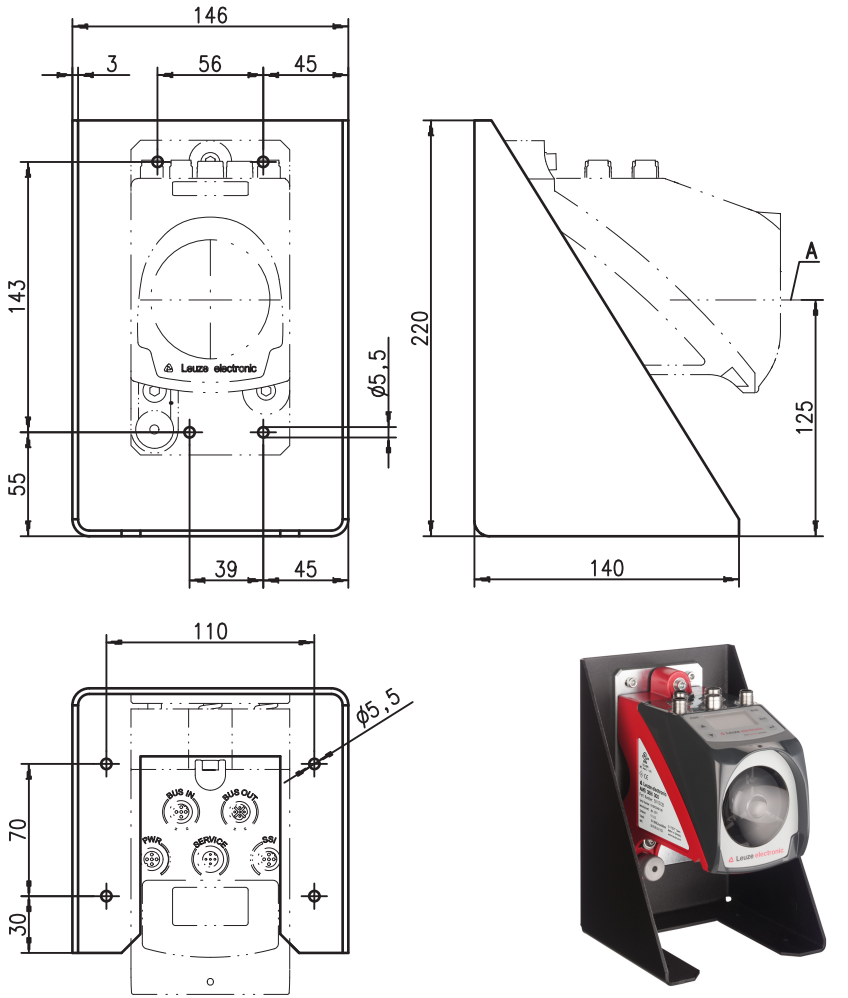

A Laser beam

Figure 5.3: Optional mounting bracket

5.2.2 Parallel mounting of the AMS 301*i*

Definition of the term "parallel spacing"

As shown in figure 5.4, dimension X describes the "parallel spacing" of the inner edges of the two laser light spots on the reflector.

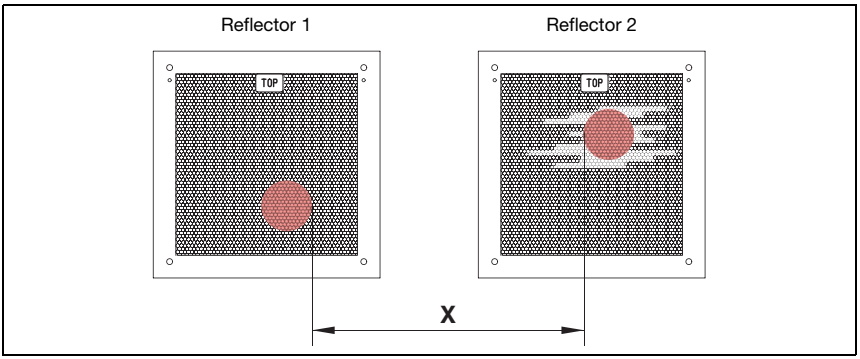

Figure 5.4: Minimum parallel spacing X between adjacent AMS 301*i*

The diameter of the light spot increases with distance.

	AMS 301*i* 40 (H)	AMS 301*i* 120 (H)	AMS 301*i* 200 (H)	AMS 301*i* 300 (H)
Max. measurement distance	40 m	120 m	200 m	300 m
Light spot diameter	≤ 40 mm	≤ 100 mm	≤ 150 mm	≤ 225 mm

Thus, the center-to-center spacing of the two AMS 301*i* devices with respect to one another can be calculated as a function of the maximum measurement distance.

To define the minimum parallel spacing between two AMS 301*i*, it is necessary to distinguish between three different arrangements of AMS 301*i* and reflectors.

The AMS 301i are mounted stationary and in parallel on one plane.
Both reflectors move independently of one another at different distances to the AMS 301i.

Minimum parallel spacing X of the two laser light spots:

X = 100 mm + (max. measurement distance in mm x 0.01)

The AMS 301i are mounted stationary and in parallel on one plane.
Both reflectors move in parallel at the same distance to the AMS 301i.

Measurement distance **up to 120 m**: minimum parallel spacing **X ≥ 600 mm**

Measurement distance **up to 200 m**: minimum parallel spacing **X ≥ 750 mm**

Measurement distance **up to 300 m**: minimum parallel spacing **X ≥ 750 mm**

The reflectors are mounted stationary and in parallel on one plane.
Both AMS 301*i* move independently of one another at different or the same distances to the reflectors.

Measurement distance **up to 120 m**: minimum parallel spacing **X ≥ 600 mm**

Measurement distance **up to 200 m**: minimum parallel spacing **X ≥ 750 mm**

Measurement distance **up to 300 m**: minimum parallel spacing **X ≥ 750 mm**

Notice!

*Please note that when the AMS 301*i* are mounted in a mobile manner, travel tolerances could cause the two laser light spots to move towards each other.*
*Take the travel tolerances of the vehicle into account when defining the parallel spacing of adjacent AMS 301*i*.*

5.2.3 Parallel mounting of AMS 301*i* and DDLS optical data transmission

The optical data transceivers of the DDLS series and the AMS 301*i* do not interfere with one another. Depending on the size of the used reflector, the DDLS can be mounted with a minimum parallel spacing of 100 mm to the AMS 301*i*. The parallel spacing is independent of the distance.

5.3 Mounting the AMS 301*i* with laser beam deflector unit

General information

The two available deflector units are used for the 90° deflection of the laser beam, see "Accessory deflector unit" on page 60.

Attention!

The deflector units are designed for a maximum range of 40 m.
Longer distances on request.

5.3.1 Mounting the laser beam deflector unit With integrated mounting bracket

The AMS 301*i* is screwed onto the mechanism of the US AMS 01 deflector unit. The mirror can be mounted for three deflection directions:

1. Upward beam deflection
2. Beam deflection to the left
3. Beam deflection to the right

The deflector unit is mounted on plane-parallel, flat walls or plant components. For error-free position measurement, there must be an interruption-free line-of-sight between the AMS 301*i*… and the deflection mirror as well as between the mirror and the reflector.

Use the M5 screws to mount the deflector unit. Secure the screws with a toothed lock washer to protect against loosening caused by vibrations.

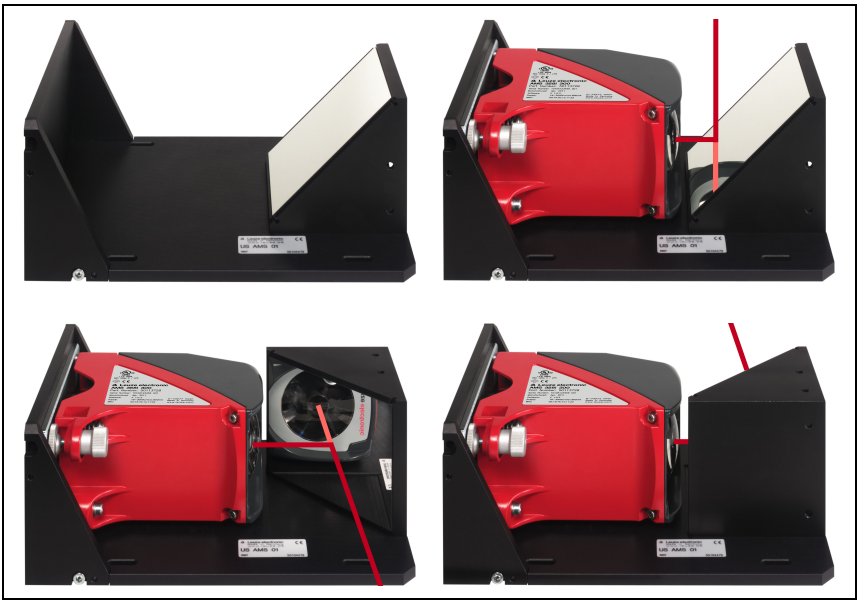

Figure 5.5: Mounting variants of the US AMS 01 laser beam deflector unit

5.3.2 Dimensioned drawing of US AMS 01 deflector unit

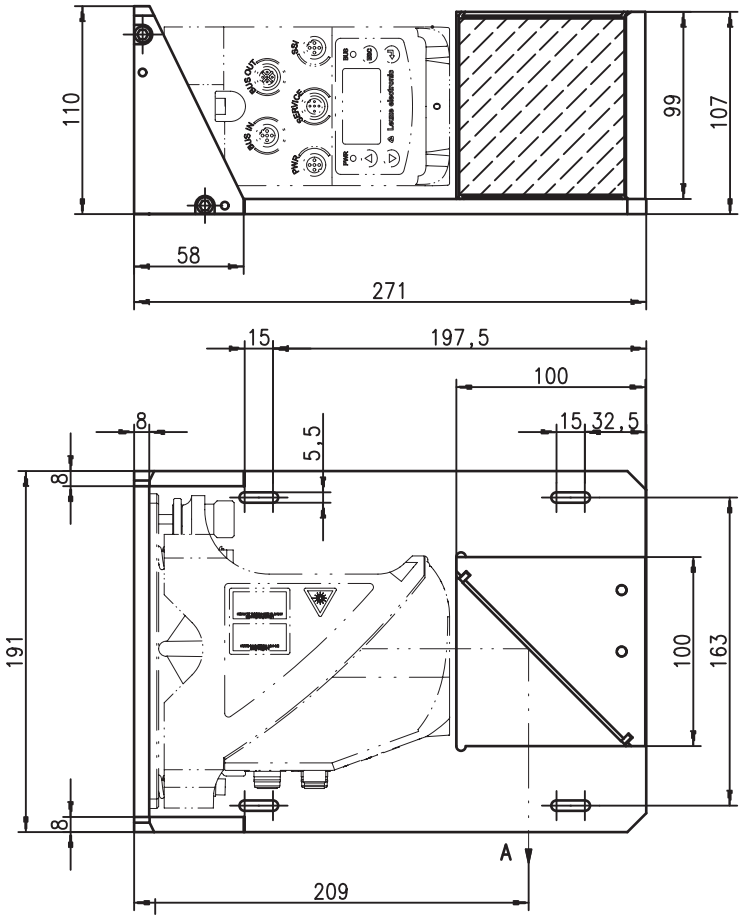

A Laser beam

Figure 5.6: Dimensioned drawing of US AMS 01 deflector unit

5.3.3 Mounting the US 1 OMS deflector unit without mounting bracket

The US 1 OMS deflector unit and the AMS 301*i* are mounted separately.

Notice!

When mounting, make certain that the laser light spot of the AMS 301i is aligned in the center of the deflection mirror.

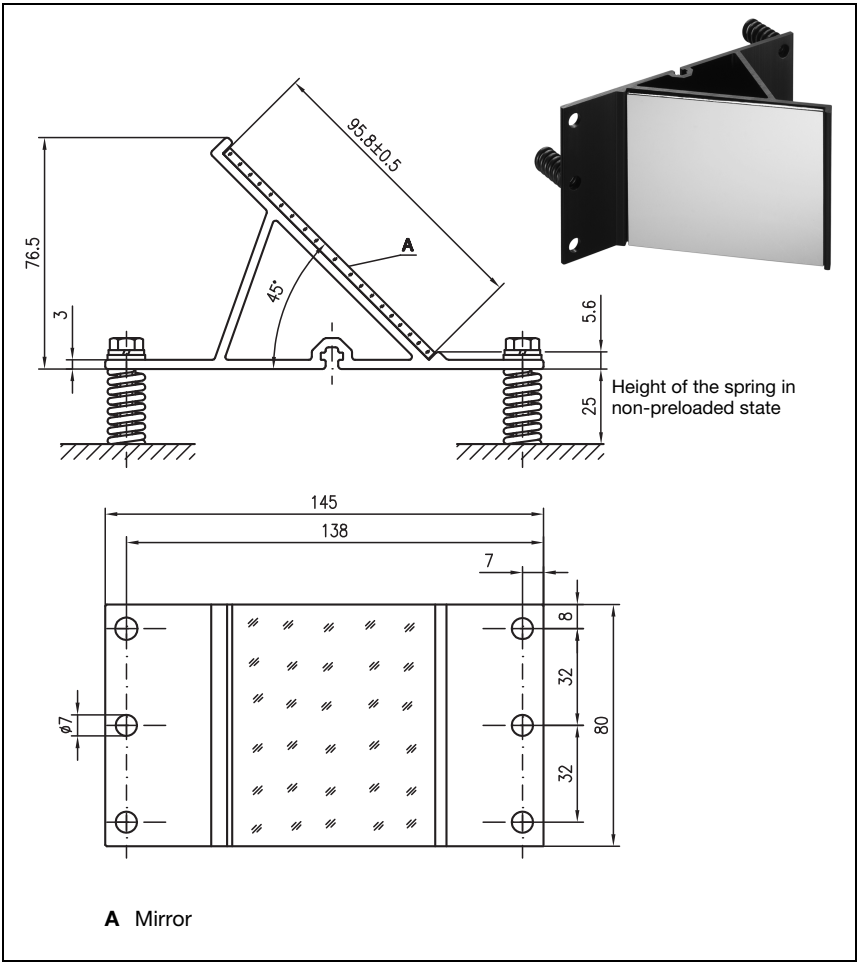

Figure 5.7: Photo and dimensioned drawing of the US 1 OMS deflector unit

Alignment of the laser light spot on the reflector is performed as described in chapter 5.2.

6 Reflectors

6.1 General information

The AMS 301*i* measures distances against a reflective tape specified by Leuze electronic. All provided specifications for the AMS 301*i*, such as the operating range or accuracy, can only be achieved with the reflective tape specified by Leuze electronic.

The reflective tapes are available as adhesive tapes, affixed to a metal plate and with an integrated heater especially for use at low temperatures. Reflective tapes with heating have the designation "**Reflective tape ...x...-H**", where "**H**" is an abbreviation for the heating variant.

The reflective tapes/reflectors must be ordered separately. The choice of size is left to the user. In chapter 6.3, recommendations on reflector size are provided as a function of the distance that is to be measured. In any case, the user must check to determine whether the recommendation is suitable for the respective application.

6.2 Description of the reflective tape

The reflective tape consists of a white, microprism-based reflective material. The microprisms are protected with a highly transparent, hard protective layer.

Under certain circumstances, the protective layer may lead to surface reflections. The surface reflections can be directed past the AMS 301*i* by positioning the reflective tape at a slight incline. The inclination of the reflective tape/reflectors is described in chapter 6.4.2. The required pitch can be found in table 6.1 "Reflector pitch resulting from spacer sleeves" on page 35.

The reflective tapes are provided with a protective foil that can easily be pulled off. This must be removed from the reflector before the complete system is put into operation.

6.2.1 Specifications of the self-adhesive foil

	Part		
Type designation	**Reflective tape 200x200-S**	**Reflective tape 500x500-S**	**Reflective tape 914x914-S**
Part no.	50104361	50104362	50108988
Foil size	200x200mm	500x500mm	914x914mm
Recommended application temperature for adhesive tape	+5°C … +25°C		
Temperature resistance, affixed	-40°C … +80°C		
Mounting surface	The mounting surface must be clean, dry and free of grease.		
Cutting the tape	Cut with a sharp tool, always on the side of the prism structure.		
Cleaning	Do not use any agents that act with a grinding effect. A conventional household detergent can be used as a cleaning agent. Rinse with clear water and dry the surface.		
Storing the foil	Store in a cool and dry place.		

6.2.2 Specifications of the reflective tape on a metal plate

The reflective tape is affixed to a metal plate. Included with the metal plate are spacers for positioning at an incline - for avoiding surface reflections - (see chapter 6.4.2 "Mounting the reflector").

	Part		
Type designation	**Reflective tape 200x200-M**	**Reflective tape 500x500-M**	**Reflective tape 914x914-M**
Part no.	50104364	50104365	50104366
Foil size	200x200mm	500x500mm	914x914mm
Outer dimensions of the metal plate	250x250mm	550x550mm	964x964mm
Weight	0.8kg	4kg	25kg
Cleaning	Do not use any agents that act with a grinding effect. A conventional household detergent can be used as a cleaning agent. Rinse with clear water and dry the surface.		
Storing the reflector	Store in a cool and dry place.		

6.2.3 Dimensioned drawing of reflective tape on a metal plate

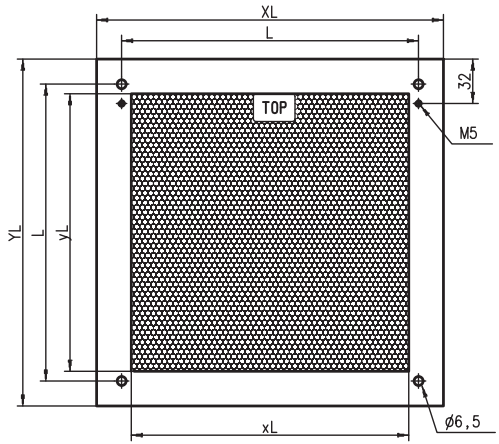

Always align the **TOP** marking with the AMS connections! (chapter 6.4.2)

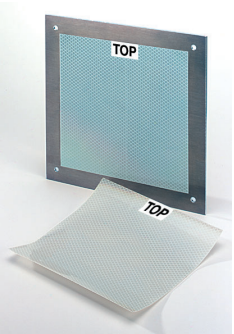

Figure 6.1: Dimensioned drawing of reflectors

Part	Reflective tape (mm)		Reflector plate (mm)		
	xL	yL	XL	YL	L
Reflective tape 200x200-M	200	200	250	250	214
Reflective tape 500x500-M	500	500	550	550	514
Reflective tape 914x914-M	914	914	964	964	928

6.2.4 Specifications of heated reflectors

The reflective tape is affixed to a heated, thermally insulated base. The insulation results in a very high energetic efficiency.

Only the reflective tape is kept at the specified temperature by the integrated heater. Through the insulation on the back, the generated heat cannot be transferred via the steel construction. Energy costs are greatly reduced in the case of continuous heating.

	Part		
Type designation	**Reflective tape 200x200-H**	**Reflective tape 500x500-H**	**Reflective tape 914x914-H**
Part no.	50115020	50115021	50115022
Voltage supply	230VAC		
Power	100W	600W	1800W
Current consumption	~ 0.5A	~ 3A	~ 8A
Length of the supply line	2 m		
Size of the reflective tape	200x200mm	500x500mm	914x914mm
Outer dimensions of the base material	250x250mm	550x550mm	964x964mm
Weight	0.5kg	2.5kg	12kg
Temperature control	Controlled heating with the following switch-on and switch-off temperatures, measured at the reflector surface.		
Switch-on temperature	~ 5°C		
Switch-off temperature	~ 20°C		
Operating temperature	-30°C … +70°C		
Storage temperature	-40°C … +80°C		
Air humidity	Max. 90%, non-condensing.		
Cleaning	Do not use any agents that act with a grinding effect. A conventional household detergent can be used as a cleaning agent. Rinse with clear water and dry the surface.		
Storing the reflector	Store in a cool and dry place.		

6.2.5 Dimensioned drawing of heated reflectors

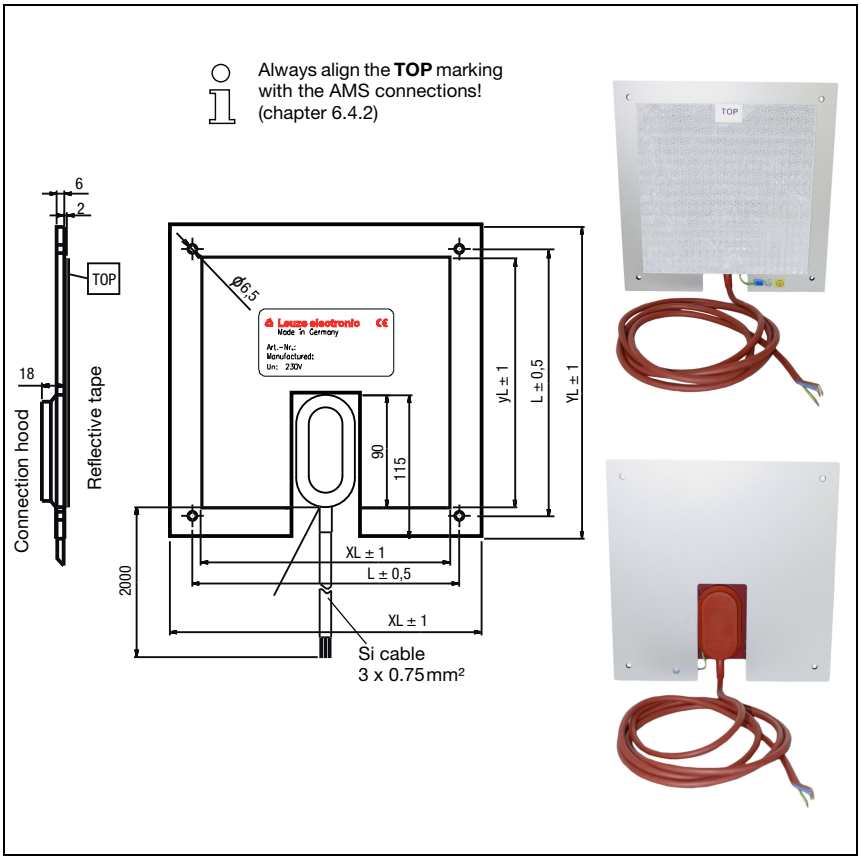

Figure 6.2: Dimensioned drawing of heated reflectors

Part	Reflective tape (mm)		Insulated base plate (mm)		
	xL	yL	XL	YL	L
Reflective tape 200x200-H	200	200	250	250	214
Reflective tape 500x500-H	500	500	550	550	514
Reflective tape 914x914-H	914	914	964	964	928

6.3 Selecting reflector sizes

Depending on system design, the reflector can be mounted so that it travels on the vehicle or it can be mounted at a fixed location.

Attention!

The reflector sizes shown below are a recommendation from Leuze electronic for on-vehicle mounting of the AMS 301i. For stationary mounting of the AMS 301i, a smaller reflector is generally sufficient for all measurement distances.
On the basis of the system planning and design, always check whether mechanical travel tolerances may require the use of a reflector larger than that which is recommended. This applies, in particular, when the laser measurement system is mounted on a vehicle. During travel, the laser beam must reach the reflector without interruption. For on-vehicle mounting of the AMS 301i, the reflector size must accommodate any travel tolerances that may arise and the associated "wandering" of the light spot on the reflector.

Overview of reflector types

Recommended reflector sizes			
AMS 301*i* selection (Operating range in m)	**Recommended reflector size (H x W)**	**Type designation …-S = Self-adhesive …-M = metal plate …-H = heating**	**Part no.**
AMS 301*i* 40 (**max. 40m**)	200x200mm	Reflective tape 200x200-S Reflective tape 200x200-M Reflective tape 200x200-H	50104361 50104364 50115020
AMS 301*i* 120 (**max. 120m**)	500x500mm	Reflective tape 500x500-S Reflective tape 500x500-M Reflective tape 500x500-H	50104362 50104365 50115021
AMS 301*i* 200 (**max. 200m**)	749x914mm 914x914mm	Reflective tape 749x914-S Reflective tape 914x914-M Reflective tape 914x914-S Reflective tape 914x914-H	50104363 50104366 50108988 50115022
AMS 301*i* 300 (**max. 300m**)	749x914mm 914x914mm	Reflective tape 749x914-S Reflective tape 914x914-M Reflective tape 914x914-S Reflective tape 914x914-H	50104363 50104366 50108988 50115022

6.4 Mounting the reflector

6.4.1 General information

Self-adhesive reflective tapes

The reflective tapes of the "Reflective tape …x…**-S**" self-adhesive series must be affixed to a flat, clean and grease-free surface. We recommend using a separate metal plate, which is to be provided on-site.

As described in table 6.1, the reflective tape must be angled.

Reflective tapes on metal

The reflective tapes of the "Reflective tape …x…**-M**" series are provided with corresponding mounting holes. Spacer sleeves are provided in the packet for achieving the necessary pitch angle. For further information see table 6.1.

Heated reflectors

The reflective tapes of the "Reflective tape ...x...**-H**" series are provided with corresponding mounting holes. Due to the voltage supply affixed on the rear, the reflector cannot be mounted flat. Included in the package are four distance sleeves in two different lengths. Use the distance sleeves to achieve a base separation to the wall as well as the necessary pitch for avoiding surface reflection. For further information see table 6.1.

The reflector is provided with a 2m-long connection cable for supplying with 230VAC. Connect the cable to the closest power outlet. Observe the current consumptions listed in the specifications.

Attention!

Connection work must be carried out by a certified electrician.

6.4.2 Mounting the reflector

The combination of laser measurement system and reflective tape/reflector is mounted so that the laser light spot hits the tape as centered as possible and without interruption.

For this purpose, use the alignment elements provided on the AMS 301*i*… (see chapter 5.2 "Mounting the AMS 301i"). If necessary, remove the protective foil from the reflector.

Attention!

The "TOP" label mounted on the reflectors should be aligned the same as the connections of the AMS 301*i*.

Example:

If the AMS 301i is mounted so that the M12 connections are on the top, the "TOP" label of the reflector is also on the top. If the AMS 301i is mounted so that the M12 connections are on the side, the "TOP" label of the reflector is also on the side.

Notice!

The reflector must be angled. To do this, use the spacer sleeves. Angle the reflectors so that the ***surface reflections of the foil seal are deflected to the left, right or upwards****, chapter 6.4.3 gives the correct pitch with respect to the reflector size and, thus, the length of the spacers.*

Reflective tapes …-S and …-M

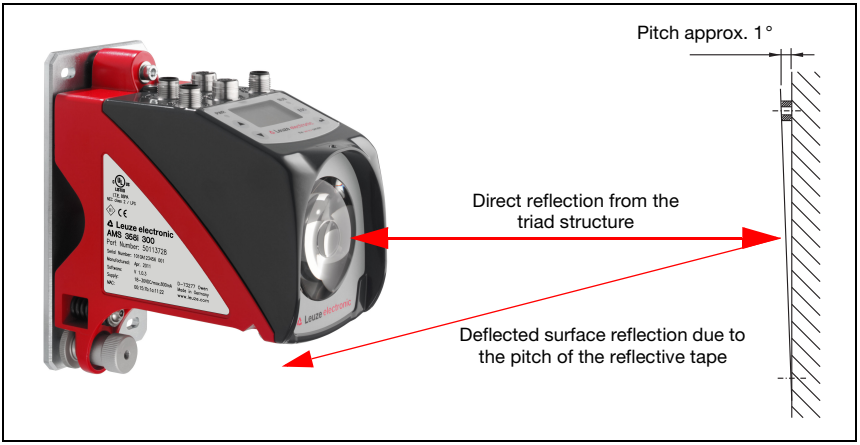

Figure 6.3: Reflector mounting

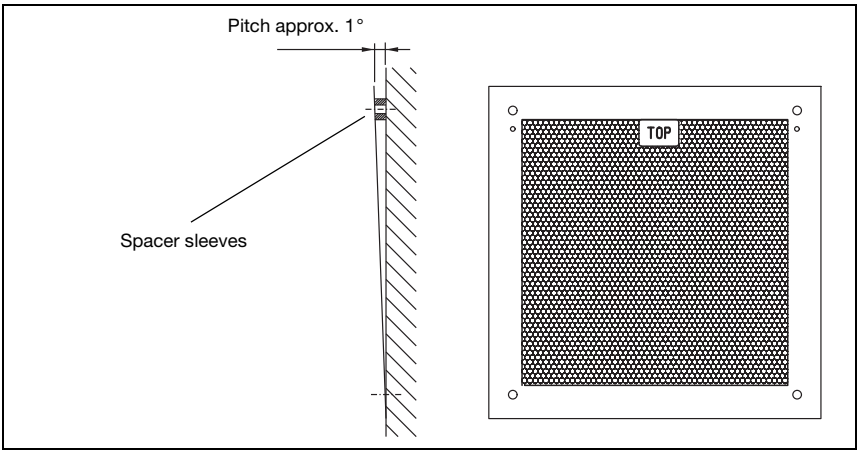

Figure 6.4: Pitch of the reflector

Reflective tapes …-H

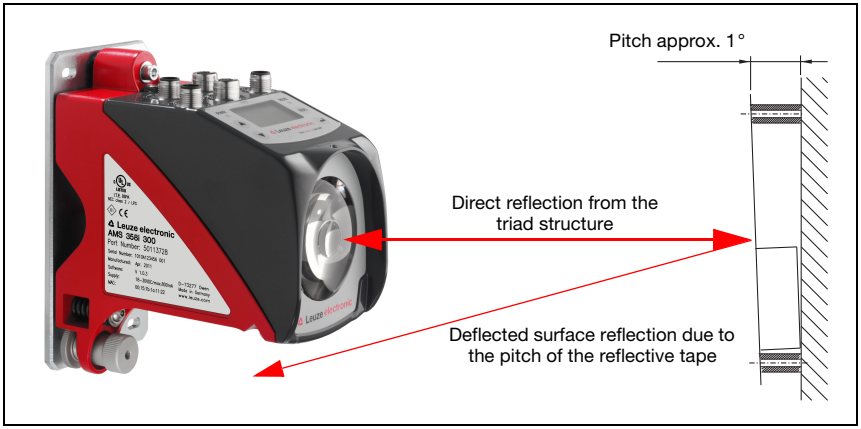

Figure 6.5: Mounting of heated reflectors

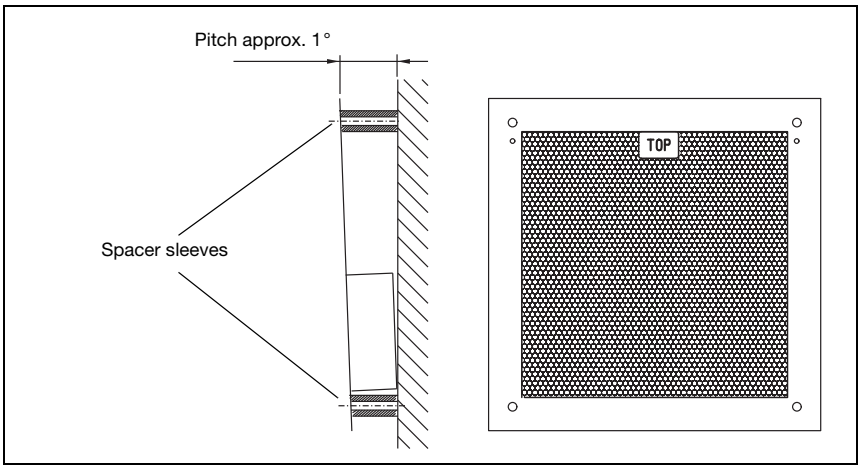

Figure 6.6: Pitch of the heated reflector

6.4.3 Table of reflector pitches

Reflector type	Pitch resulting from spacer sleeves [1]	
Reflective tape 200x200-S Reflective tape 200x200-M	**2 x 5mm**	
Reflective tape 200x200-H	**2 x 15mm**	**2 x 20mm**
Reflective tape 500x500-S Reflective tape 500x500-M	**2 x 10mm**	
Reflective tape 500x500-H	**2 x 15mm**	**2 x 25mm**
Reflective tape 749x914-S	**2 x 20mm**	
Reflective tape 914x914-S Reflective tape 914x914-M	**2 x 20mm**	
Reflective tape 914x914-H	**2 x 15mm**	**2 x 35mm**

1) Spacer sleeves are included in the delivery contents of reflective tape …-**M** and …-**H**

Table 6.1: Reflector pitch resulting from spacer sleeves

Notice!

Reliable function of the AMS 301i and, thus, max. operating range and accuracy can only be achieved with the reflective tape specified by Leuze electronic. No function can be guaranteed if other reflectors are used!

7 Electrical connection

The AMS 301*i* laser measurement systems are connected using variously coded M12 connectors. This ensures unique connection assignments.

Notice!

The corresponding mating connectors and ready-made cables are available as accessories for all cables. For further information, see chapter 11 "Type overview and accessories".

Figure 7.1: Connections of the AMS 301*i*

7.1 Safety notices for the electrical connection

Attention!

Before connecting the device, be sure that the supply voltage agrees with the value printed on the name plate.
The device may only be connected by a qualified electrician.
Ensure that the functional earth (FE) is connected correctly. Unimpaired operation is only guaranteed when the functional earth is connected properly.
If faults cannot be corrected, the device should be removed from operation and protected against possible use.

Attention!

For UL applications, use is permitted exclusively in Class 2 circuits according to NEC (National Electric Code).

The laser measurement systems are designed in accordance with safety class III for supply by PELV (protective extra-low voltage with reliable disconnection).

Notice!

Protection class IP65 is achieved only if the connectors and caps are screwed into place!

Described in detail in the following are the individual connections and pin assignments.

7.2 PWR – voltage supply / switching input/output

PWR (5-pin plug, A-coded)			
PWR 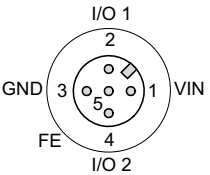 **M12 plug (A-coded)**	**Pin**	**Name**	**Remark**
	1	VIN	Positive supply voltage +18 … +30VDC
	2	I/O 1	Switching input/output 1
	3	GND	Negative supply voltage 0VDC
	4	I/O 2	Switching input/output 2
	5	FE	Functional earth
	Thread	FE	Functional earth (housing)

Table 7.1: Pin assignment PWR

Further information on configuring the input/output can be found in chapter 8 and chapter 9.

7.3 RS 485 BUS IN

RS 485 BUS IN (5-pin plug, B-coded)			
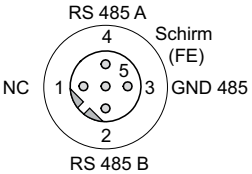 **M12 connector (B-coded)**	**Pin**	**Name**	**Remark**
	1	NC	Not used
	2	RS 485 B	Data RS 485 B (-)
	3	GND 485	Data reference potential
	4	RS 485 A	Data RS 485 A (+)
	5	FE	Functional earth
	Thread	Shield	Shield

Table 7.2: RS 485 BUS IN pin assignment

7.4 RS 485 BUS OUT

RS 485 BUS OUT (5-pin socket, B-coded)			
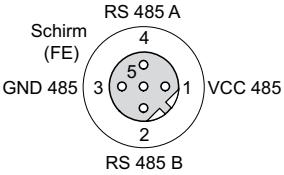 **M12 socket (B-coded)**	**Pin**	**Name**	**Remark**
	1	VCC 485	Supply voltage +5V (termination)
	2	RS 485 B	Data RS 485 B (-)
	3	GND 485	Data reference potential
	4	RS 485 A	Data RS 485 A (+)
	5	FE	Functional earth
	Thread	Shield	Shield

Table 7.3: RS 485 BUS OUT pin assignment

7.5 Service

Service (5-pin socket, A-coded)			
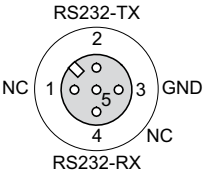 **M12 socket (A-coded)**	**Pin**	**Name**	**Remark**
	1	NC	Not used
	2	RS232-TX	Transmission line RS 232/service data
	3	GND	Voltage supply 0VDC
	4	RS232-RX	Receiving line RS 232/service data
	5	NC	Not used
	Thread	FE	Functional earth (housing)

Table 7.4: Service pin assignments

Notice!

The service interface is designed only for use by Leuze electronic!

8 Display and control panel AMS 301*i*

8.1 Structure of the control panel

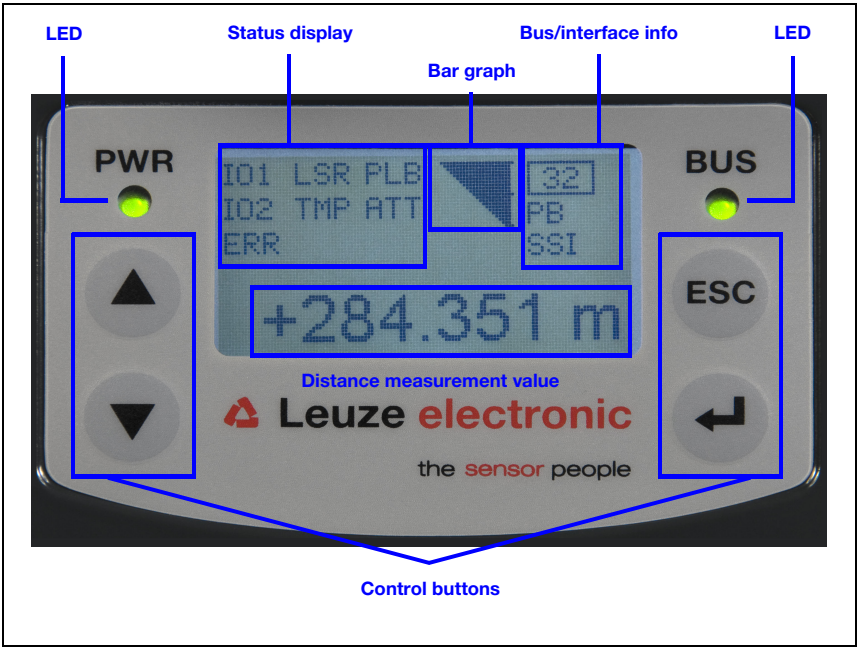

Figure 8.1: Structure of the control panel using the AMS 304*i* PROFIBUS device variant as an example

Notice!

The figure is for illustration purposes only and does not correspond to AMS 301i with respect to bus/interface info.

8.2 Status display and operation

8.2.1 Indicators in the display

Status and warning messages in the display

IO1 **Input 1 or output 1 active:**
Function depending on configuration.

IO2 **Input 2 or output 2 active:**
Function depending on configuration.

LSR **Warning - laser prefailure message:**
Laser diode old, device still functional, exchange or have repaired.

TMP **Warning - temperature monitoring:**
Permissible internal device temperature exceeded / not met.

PLB **Plausibility error:**
Implausible measurement value. Possible causes: light beam interruption, outside of measurement range, permissible internal device temperature considerably exceeded or traverse rate >10m/s.

Depending on the configuration, either zero or the last valid measurement value is output at the interfaces.

ATT **Warning received signal:**
Laser outlet window or reflector soiled or fogged by rain, water vapor or fog. Clean or dry surfaces.

ERR **Internal hardware error:**
The device must be sent in for inspection.

Bar graph

Indicates the **strength of the received laser light**.

The center bar represents the **ATT** warning threshold. The distance value remains valid and is output at the interfaces.

If no bar graph is available, the **PLB** status information appears at the same time.

The measurement value has thus been assessed as being implausible. Depending on the configuration, either zero or the last valid measurement value is output at the interfaces.

Interface info

The number "8" in the display shows the set address, the designation "RS 485" displays the respectively activated interface.

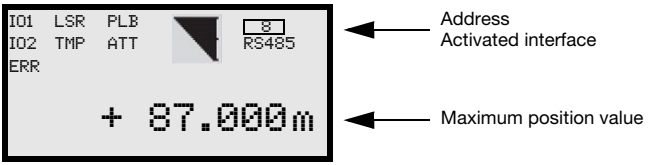

Maximum position value

The measured position value is displayed in the configured unit of measurement.

+87.000m With the **metric** setting, the measurement value is always displayed in meters with **three decimal places**.

+87.0in With the **inch** setting, the measurement value is always displayed in inches with **one decimal place**.

8.2.2 LED status displays

PWR LED

PWR	**Off**	**Device OFF** - No supply voltage
PWR	**Flashing green**	**Power LED flashes green** - No measurement value output - Voltage connected - Self test running - Initialization running - Boot process running
PWR	**Green continuous light**	**Power LED green** - AMS 301*i* ok - Measurement value output - Self test successfully finished - Device monitoring active
PWR	**Red flashing**	**Power LED flashes red** - Device ok but warning message (ATT, TMP, LSR) set in display - Light beam interruption - Plausibility error (PLB)
PWR	**Red continuous light**	**Power LED red** - No measurement value output; for details, see Display

BUS LED

BUS	**Flashing green**	**BUS LED flashes green** - Initialization of the host interface
BUS	**Green continuous light**	**BUS LED green** - Host interface active -

8.2.3 Control buttons

▲	**Up**	Navigate upward/laterally.
▼	**Down**	Navigate downward/laterally.
ESC	**ESC**	Exit menu item.
↵	**ENTER**	Confirm/enter value, change menu levels.

Navigating within the menus

The menus within a level are selected with the up/down buttons ▲ ▼.

The selected menu item is activated with the enter button ↵.
Press the ESC button ESC to move up one menu level.
When one of the buttons is actuated, the display illumination is activated for 10 min.

Setting values

If input of a value is possible, the display looks like this:

```
100
        <-l0123456789  save
    Default ---------------- unit
126          |    |
```

← + ↵	Delete character
0...9 + ↵	Enter digit
save + ↵	Save

Use the ▲ ▼ and ↵ buttons to set the desired value. An accidental, incorrect entry can be corrected by selecting <-l and then pressing ↵.
Then use the ▲ ▼ buttons to select Save and save the set value by pressing ↵.

Selecting options

If options can be selected, the display looks like this:

```
o OFF
  ON
   Default ---------------- unit
  OFF        |    |
```

Select the desired option with the ▲ ▼ buttons. Activate the option by pressing ↵.

8.3 Menu description

8.3.1 The main menus

After voltage has been applied to the laser, device information is displayed for several seconds. The display then shows the measurement window with all status information.

```
AMS 301i 120
Leuze electronic
          GmbH & Co. KG
SW: V 1.3.0   HW:1
SN: --------------
```

Device information - main menu

This menu item contains detailed information on
- Device model,
- Manufacturer,
- Software and hardware version,
- Serial number.

No entries can be made via the display.

```
Network information
Address:      ---
Data format:  8,n,1
Baud rate:    ---- kbit/s
```

Network information - main menu

- Explanations of address, data format, baud rate.

No entries can be made via the display.

```
IO1  LSR  PLB        8
IO2  TMP  ATT        RS485
ERR

        + 87.000m
```

Status and measurement data - main menu

- Display of status-, warning-, and error messages
- Status overview of the switching inputs/outputs.
- Bar graph for the reception level.
- Link.
- Measurement value.

No entries can be made via the display.
See "Indicators in the display" on page 39.

```
Parameter
  Parameter handling
  RS485
  Maximum position value
  I/O
  Other
```

Parameter - main menu

- Configuration of the AMS.

See "Parameter menu" on page 44.

```
Language
selection
o Deutsch
o English
o Español
o Français
```

Language selection - main menu

- Selection of the display language.

See "Language selection menu" on page 47.

```
Service
  Status messages
  Diagnostics
  Expanded diagnostics
```

Service - main menu

- Display of status messages.
- Display of diagnostic data.

No entries can be made via the display.
See "Service menu" on page 48.

Notice!

The rear cover *of this manual includes a* ***fold-out page*** *with the complete* ***menu structure****. It describes the menu items in brief.*

8.3.2 Parameter menu

Parameter handling submenu

The following functions can be called up in the Parameter handling submenu:

- Lock and enable parameter entry
- Set up a password
- Reset the AMS 301*i* to default settings.

Table 8.1: Parameter handling submenu

Level 3	Level 4	Level 5	Selection/configuration option Description	Standard
Parameter enabling			ON / OFF The standard setting (OFF) prevents unintended parameter changes. With parameter enabling activated (ON), the display is inverted. In this state, it is possible to change parameters manually.	OFF
Password	Activate password		ON / OFF To enter a password, parameter enabling must be activated. If a password is assigned, changes to the AMS 301*i* can only be made after the password is entered. The master password 2301 bridges the individually set password.	OFF
	Password entry		Configuration option of a four-digit numerical password	
Parameters to default			By pressing the enter button ↵ after selecting Parameters to default, all parameters are reset to their standard settings without any further security prompts. In this case, English is selected as the display language.	

Additional important information on parameter handling can be found at the end of the chapter.

RS 485 submenu

Table 8.2: RS 485 submenu

Level 3	Level 4	Level 5	Selection/configuration option Description	Standard
Activation			Activates or deactivates the AMS 301*i* as an RS 485 participant.	ON
Address			Setting of the address used for host communication. The address range spans from 0 to 15.	0
Baud rate			9.6 kbit/s / 19.2 kbit/s / 38.4 kbit/s / 57.6 kbit/s / 115.2 kbit/s Selection of the baud rate for serial communication. It must be the same at the transmission and reception sides to enable communication.	38.4 kbit/s
Format			… 8,n,1 / … 8,e,1 / … 8,o,1 Selection of the data mode for serial communication. Designation is done in number of data bits, parity (N=none, E=even, O=odd) and number of stop bits. For example, "8N1" therefore means 8 data bits, no parity, 1 stop bit.	8,n,1

Table 8.2: RS 485 submenu

Level 3	Level 4	Level 5	Selection/configuration option Description	Standard
Position resolution			0.01 mm / 0.1 mm / 1 mm / 10 mm / free resolution The measurement value can be displayed in these resolutions. The value of the free resolution is determined in the "Position value" submenu in the "Value of free resolution" parameter.	0.1 mm
Velocity resolution			1 mm/s / 10 mm/s / 100 mm/s	1

Position value submenu

Table 8.3: Position value submenu

Level 3	Level 4	Level 5	Selection/configuration option Description	Standard
Measurement unit			Metric/Inch Specifies the units of the measured distances	Metric
Count direction			Positive/Negative Positive: The measurement value begins at 0 and increases with increasing distance. Negative: The measurement value begins at 0 and decreases with increasing distance. Negative distance values may need to be compensated with an offset or preset.	Positive
Offset			Output value=measurement value+offset. The resolution of the offset value is independent of the selected "Resolution position" and is entered in mm or inch/100. The offset value is effective immediately following entry. If the preset value is activated, this has priority over the offset. Preset and offset are not offset against each other.	0 mm
Preset			The preset value is accepted by means of teach pulse. The teach pulse can be applied to a hardware input of the M12 PWR connector. The hardware input must be appropriately configured. See also configuration of the I/Os.	0 mm
Free resolution value			The measurement value can be resolved in increments of 1/1000 within the 5 … 50000 value range. If, e.g., a resolution of 0.875 mm per digit is required, the parameter is set to 875. In the activated interface, the measurement value display must also be set to "free resolution" ("Resolution position" parameter).	1000
Error delay			ON / OFF Specifies whether, in the event of an error, the position value immediately outputs the value of the "Position value in the case of error" parameter or the last valid position value for the configured error delay time.	ON/100 ms
Position value in the case of error			Last valid value / zero Specifies which position value is output after the error delay time elapses.	Zero

I/O submenu

Table 8.4: I/O submenu

Level 3	Level 4	Level 5	Selection/configuration option Description	Standard
I/O 1	Port configuration		Input/Output Defines whether I/O 1 functions as an output or input.	Output
	Switching input	Function	No function/preset teach/laser ON/OFF	No function
		Activation	Low active/High active	Low active
	Switching output	Function	Pos. limit value 1 / Pos. limit value 2 / Velocity / Intensity (ATT) / Temp. (TMP) / Laser (LSR) / Plausibility (PLB) / Hardware (ERR) The individual functions are "ORed" on the selected switching output.	Plausibility (PLB), hardware (ERR)
		Activation	Low active/High active	Low active
I/O 2	Port configuration		Input/Output Defines whether I/O 2 functions as an output or input.	Output
	Switching input	Function	No function/preset teach/laser ON/OFF	No function
		Activation	Low active/High active	Low active
	Switching output	Function	Pos. limit value 1 / Pos. limit value 2 / Velocity / Intensity (ATT) / Temp. (TMP) / Laser (LSR) / Plausibility (PLB) / Hardware (ERR) The individual functions are "ORed" on the selected switching output.	Intensity (ATT), Temp. (TMP), Laser (LSR)
		Activation	Low active/High active	Low active
Limit values	Upper pos. limit 1	Activation	ON / OFF	OFF
		Limit value input	Value input in mm or inch/100	0
	Lower pos. limit 1	Activation	ON / OFF	OFF
		Limit value input	Value input in mm or inch/100	0
	Upper pos. limit 2	Activation	ON / OFF	OFF
		Limit value input	Value input in mm or inch/100	0
	Lower pos. limit 2	Activation	ON / OFF	OFF
		Limit value input	Value input in mm or inch/100	0
	Max. velocity	Activation	ON / OFF	OFF
		Max. velocity	Value input in mm/s or inch/100s	0

Other submenu

Table 8.5: Other submenu

Level 3	Level 4	Level 5	Selection/configuration option Description	Standard
Heating control			Standard (10° C … 15° C)/Extended (30° C … 35°) Defines a switch-on/switch-off range for the heating control. The extended switch-on/switch-off range for heating may provide relief in the event of condensation problems. There is no guarantee that no condensation will occur on the optics in the extended switch-on/switch-off range due to the limited heating capacity. This parameter is available as standard, but functions only for devices with integrated heating (AMS 301*i*… **H**).	Standard
Display illumination			10 minutes/ON Display illumination is switched off after 10 minutes or, if the parameter is set to "ON", illumination is always on.	10 min.
Display contrast			Weak/Medium/Strong The display contrast may change at extreme temperature values. The contrast can subsequently be adapted using the three levels.	Medium
Service RS232	Baud rate		57.6 kbit/s / 115.2 kbit/s The service interface is only available to Leuze internally.	115.2 kbit/s
	Format		8,e,1 / 8,n,1 The service interface is only available to Leuze internally.	8,n,1

8.3.3 Language selection menu

```
Language
selection
o Deutsch
● English
o Español
o Français
```

There are 5 display languages available:

- German
- English
- Spanish
- French
- Italian

The AMS 301*i* is delivered from the factory with the display preset to English.

To change the language, no password needs to be entered nor must password enabling be activated. The display language is a passive operational control and is, thus, not a function parameter, per se.

8.3.4 Service menu

```
Service
 Status messages
 Diagnostics
 Expanded diagnostics
```

A more detailed description of the individual functions can be found in chapter 10.

8.4 Operation

Described here is an operating process using parameter enabling as an example.

Parameter enabling

During normal operation parameters can only be viewed. If parameters are to be changed, the ON menu item in the Parameter -> Parameter handling -> Parameter enable menu must be activated. To do this, proceed as follows:

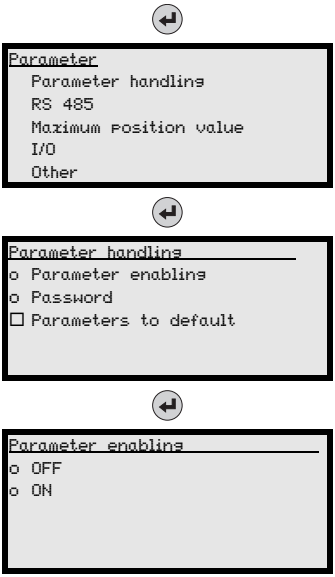

In the main menu, press the enter button to enter the Parameter menu.

Use the ▲ ▼ buttons to select the Parameter handling menu item.

Press the enter button to enter the Parameter handling menu.

In the Parameter handling menu, use the ▲ ▼ buttons to select the Parameter enabling menu item.

Press the enter button to enter the Parameter enabling menu.

In the Parameter enabling menu, use the ▲ ▼ buttons to select the ON menu item.

Press the enter button to switch on parameter enabling.

The PWR LED illuminates orange; the display is inverted. You can now set the individual parameters on the display.

Press the ESC button twice to return to the Parameter menu.

Viewing and editing parameters

As long as parameter enabling is activated, the entire AMS 301*i* display is inverted.

Communication between the control and the AMS 301*i* via the RS 485 interface is also active when parameter enabling is active.

Notice!

Changes to parameters via display entry have immediate effect.
If a password was stored, parameter enabling is not possible until this password is entered, see "Password for parameter enabling" below.

Password for parameter enabling

Parameter entry on the AMS 301*i* can be protected with a four-digit numerical password. With the AMS 301*i*, the password is entered via the display. If parameter enabling has been activated after successfully entering the password, parameters can be changed via the display.

Notice!

*The **master password 2301** can enable the AMS 301i at any time.*

9 RS 485 interface

9.1 General Information about the RS 485 interface

The AMS 301*i* features an integrated RS 485 interface. The RS 485 interface is activated on delivery.

Notice!

To activate / deactivate the interface, parameter enabling must be activated (see chapter 8.3.2).

The respectively activated interface appears in the display.

Figure 9.1: Interfaces of the AMS 301*i*

9.2 RS 485 electrical connection

RS 485 BUS IN / M12 pin assignment

RS 485 BUS IN (5-pin plug, B-coded)			
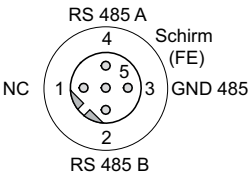	**Pin**	**Name**	**Remark**
	1	**NC**	Not used
	2	**RS 485 B**	Data RS 485 B (-)
	3	**GND 485**	Data reference potential
	4	**RS 485 A**	Data RS 485 A (+)
	5	**FE**	Functional earth
M12 connector (B-coded)	**Thread**	**Shield**	Functional earth (housing)

RS 485 BUS OUT / M12 pin assignment

RS 232 BUS IN (5-pin socket, B-coded)			
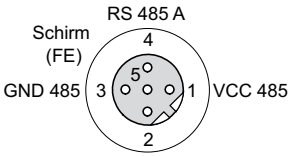 **M12 socket (B-coded)**	**Pin**	**Name**	**Remark**
	1	**VCC 485**	VCC for termination
	2	**RS 485 B**	Data RS 485 B (-)
	3	**GND 485**	Data reference potential
	4	**RS 485 A**	Data RS 485 A (+)
	5	**FE**	Functional earth
	Thread	**Shield**	Functional earth (housing)

9.3 RS 485 address entry

Notice!

Basic operation of the control panel/display is described in chapter 8.4.
To set the address parameter enabling must be activated. The display is inverted with parameter enabling activated.

Attention!

When parameter enabling is activated, all changes made via the control panel/display are active immediately.

9.3.1 RS 485 address entry

To do this proceed as follows:

- *Activate parameter enabling.*
- *Select the RS485 submenu.*
- *Select the address menu item.*
- *Select the RS 485 address of the AMS 301i to be between 0 and 15.*
- *Deactivate parameter enabling.*

9.4 RS 485 interface data

9.4.1 Default settings of the RS 485 interface

On delivery, the RS 485 interface is activated.

Designation	Value range	Default
Activation	ON / OFF	**ON**
Baud rate in kbit/s	9.6 / 19.2 / 38.4 / 57.6 / 115.2	**38,4**
Data format	8,n,1 / 8,e,1 / 8, o, 1	**8,n,1**

9.4.2 Parameter setting for AMS 301*i*

An overview of all parameters to be set is listed in the fold-out page at the end of the manual.

All parameters can be set via the panel/display.

Basic operation of the display is described in chapter 8.4.

In order to change parameters, parameter enabling must be activated.

Notice!

Changed parameters have an immediate effect on the interface.

9.4.3 Communication protocol (binary protocol)

Querying AMS 301i data (request)

The request to transmission of the measured distances or the speed or the control of the laser diode (ON/OFF) is controlled via a protocol which is 3 bytes long.

Query / request to the AMS 301i

Byte	Bit 7	Bit 6	Bit 5	Bit 4	Bit 3	Bit 2	Bit 1	Bit 0
0	1	1	0	0	ADR	ADR	ADR	ADR
1	CMD	CMD	CMD	CMD	CMD	CMD	CMD	CMD
2	XOR	XOR	XOR	XOR	XOR	XOR	XOR	XOR

Byte 0: Bit 7 and bit 6: static 1
Bit 5 and bit 4: static 0
Bit 3 to bit 0: addressing of the AMS 301*i*
Possible address entry from 0 to 15.
The address used must be set on the AMS 301*i* via the display.
Bit 0 = LSB, Bit 3 = MSB

Byte 1: CMD
Command = Data request to the AMS 301*i*.

Binary coding	Hex coding	Function
1111 0001	F1	Request of an individual distance value
1111 0100	F4	Laser diode on
1111 0101	F5	Laser diode off
1111 0110	F6	Request of an individual velocity value
1111 1000	F8	Single request of position and velocity value

Byte 2: XOR linking from byte 0 and byte 1
An uneven binary 1 number (calculated column by column from top to bottom) sets the XOR bit to 1.

Example

Byte	Bit 7	Bit 6	Bit 5	Bit 4	Bit 3	Bit 2	Bit 1	Bit 0
0	1	0	1	1	1	1	0	0
1	1	1	1	1	0	1	1	0
XOR	0	1	0	0	1	0	1	0

The XOR checksum is entered by the sender (control) in the query protocol and checked by the receiver (AMS 301*i*). A protocol is correctly transmitted when the XOR checksum of the transmitter is equal to the XOR checksum of the receiver. If the XOR comparison is negative (different checksums), the protocol from the AMS 301*i* is not accepted. The AMS 301*i* does not send an acknowledgement to an uneven checksum.

Answer of the AMS 301i data (response) for the CMD query from $F1_h$, F4 -$F6_h$, $F8_h$

The AMS 301*i* data (response) is output in a 6 byte length.

Answer / response of the AMS 301i

Byte	Bit 7	Bit 6	Bit 5	Bit 4	Bit 3	Bit 2	Bit 1	Bit 0
0	0	Laser	I/O2	I/O1	ADR	ADR	ADR	ADR
1	Ready	LSR	TMP	ERR	ATT	PLB	OVFL	SIGN
2	D23	D22	D21	D20	D19	D18	D17	D16
3	D15	D14	D13	D12	D11	D10	D09	D08
4	D07	D06	D05	D04	D03	D02	D01	D00
5	XOR	XOR	XOR	XOR	XOR	XOR	XOR	XOR

Answer of the AMS 301i data for the query from F8$_h$

The AMS 301*i* data (response) is output in an 8 byte length.

Answer / response of the AMS 301i

Byte	Bit 7	Bit 6	Bit 5	Bit 4	Bit 3	Bit 2	Bit 1	Bit 0
0	0	LASER	IO2	IO1	ADR	ADR	ADR	ADR
1	READY	LSR	TMP	ERR	ATT	PLB	OVFL	SIGN
2	D23	D22	D21	D20	D19	D18	D17	D16
3	D15	D14	D13	D12	D11	D10	D9	D8
4	D7	D6	D5	D4	D3	D2	D1	D0
5	V15	V14	V13	V12	V11	V10	V9	V8
6	V7	V6	V5	V4	V3	V2	V1	V0
7	XOR	XOR	XOR	XOR	XOR	XOR	XOR	XOR

Laser: Laser status; laser ON = 0; laser OFF = 1

I/O1 / I/O2: I/O status: signal level inactive = 0; signal level active = 1

Ready: status AMS 300*i*: not ready = 0, ready = 1

LSR: Laser diode: OK = 0, warning = 1

TMP: Temperature warning: OK = 0, warning = 1

ERR: Device error: OK = 0, error = 1

ATT: Decreasing received signal level: OK = 0, warning = 1

PLB: Implausible measurement value: OK = 0, warning = 1

OVFL: Measurement value cannot be represented in 24 bits: OK = 0, warning = 1

Sign: Measurement value sign: 0 = positive, 1 = negative

D23 - D00: Distance value or velocity value D23 = MSB, D00 = LSB

V15 - V00: Velocity value V15 = MSB, V00 = LSB

XOR: XOR linking of byte 0 to byte 4
An uneven binary 1 number (calculated column by column from top to bottom) sets the XOR bit to 1.

Example

Byte	Bit 7	Bit 6	Bit 5	Bit 4	Bit 3	Bit 2	Bit 1	Bit 0
0	1	0	1	1	1	1	0	0
1	1	1	1	1	0	1	1	0
XOR	0	1	0	0	1	0	1	0

The XOR checksum is entered by the AMS 301*i* in the answer protocol and checked by the receiver (control). A protocol is correctly transmitted when the XOR checksum of the transmitter is equal to the XOR checksum of the receiver. If the XOR comparison is negative (different checksum), the protocol is discarded by the control or the control will output an error message.

10 Diagnostics and troubleshooting

10.1 Service and diagnostics in the display of the AMS 301*i*

In the main menu of the AMS 301*i*, expanded "Diagnostics" can be called up under the Service heading.

```
Service
 Status messages
 Diagnostics
 Expanded diagnostics
```

From the Service main menu, press the enter button to access the underlying menu level.

Use the up/down buttons to select the corresponding menu item in the selected level; use the enter button to activate the selection.

Return from any sub-level to the next-higher menu item by pressing the ESC button.

10.1.1 Status messages

The status messages are written in a ring memory with 25 positions. The ring memory is organized according to the FIFO principle. No separate activation is necessary for storing the status messages. Power OFF clears the ring memory.

```
Status messages
1: - / - / -
2: - / - / -
3: - / - / -
```

Basic representation of the status messages

n: Type / No. / 1

Meaning:

n:	memory position in the ring memory
Type:	type of message: **I** = info, **W** = warning, **E** = error, **F** = severe system error
No:	internal error detection
1:	frequency of the event (always "1", since no summation occurs)

The status messages within the ring memory are selected with the up/down buttons . The enter button can be used to call up **detailed information** on the corresponding status messages with the following details:

Detailed information about a status message

Type: type of message + internal counter

UID: Leuze internal coding of the message

ID: description of the message

Info: not currently used

Within the detailed information, the enter button ↵ can be pressed again to activate an **action menu** with the following functions:

- Acknowledge message
- Delete message
- Acknowledge all
- Delete all

10.1.2 Diagnostics

The diagnostics function is activated by selecting the `Diagnostics` menu item. The ESC button ESC deactivates the diagnostics function and clears the contents of the recordings.

The recorded diagnostic data are displayed in 2 fields. In the upper half of the display, status messages of the AMS and the bar graph are displayed. The lower half contains information that assists in a Leuze-internal evaluation.

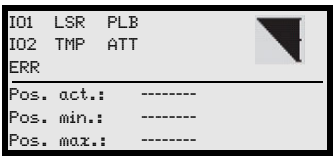

Use the up/down buttons ▲ ▼ to scroll in the bottom half between various displays. The contents of the scrollable pages are intended solely for Leuze for internal evaluation.

The diagnostics have no influence on the communication to the host interface and can be activated during operation of the AMS 301*i*.

10.1.3 Expanded diagnostics

The `Expanded diagnostics` menu item is used for Leuze-internal evaluation.

10.2 General causes of errors

10.2.1 Power LED

See also chapter 8.2.2.

Error	Possible error cause	Measure
PWR LED "OFF"	No supply voltage connected	Check supply voltage.
	Hardware error	Send in device.
PWR-LED "flashes red"	Light beam interruption	Check alignment.
	Plausibility error	Traverse rate >10m/s.
PWR-LED "static red"	Hardware error	For error description, see display, It may be necessary to send in the device.

Table 10.1: General causes of errors

10.3 Interface errors

10.3.1 BUS LED

After the AMS 301*i* is started, the **BUS** LED is always on.

10.4 Status display in the display of the AMS 301*i*

Display	Possible error cause	Measure
PLB (implausible measurement values)	Laser beam interruption	Laser spot must always be incident on the reflector.
	Laser spot outside of reflector	Traverse rate < 10m/s?
	Measurement range for maximum distance exceeded	Restrict traversing path or select AMS with larger measurement range.
	Velocity greater than 10m/s	Reduce velocity.
	Ambient temperature far outside of the permissible range (TMP display; PLB)	Select AMS with heating or ensure cooling.
ATT (insufficient received signal level)	Reflector soiled	Clean reflector or glass lens.
	Glass lens of the AMS soiled	
	Performance reduction due to snow, rain, fog, condensing vapor, or heavily polluted air (oil mist, dust)	Optimize usage conditions.
	Laser spot only partially on the reflector	Check alignment.
	Protective foil on the reflector	Remove protective foil from reflector.
TMP (operating temperature outside of specification)	Ambient temperatures outside of the specified range	In case of low temperatures, remedy may be an AMS with heating. If temperatures are too high, provide cooling or change mounting location.
LSR Laser diode warning	Laser diode prefailure message	Send in device at next possible opportunity to have laser diode replaced. Have replacement device ready.
ERR Hardware error.	Indicates an uncorrectable error in the hardware	Send in device for repair.

Notice!

*Please use **chapter 10 as a master copy** should servicing be required.*
Cross the items in the "Measures" column which you have already examined, fill out the following address field and fax the pages together with your service contract to the fax number listed below.

Customer data (please complete)

Device type:	
Company:	
Contact partner / department:	
Phone (direct):	
Fax:	
Street / No:	
ZIP code/City:	
Country:	

Leuze Service fax number:

+49 7021 573 - 199

11 Type overview and accessories

11.1 Type key

AMS 3xx *i* yyy H

Heating option	H =	With heating
Sensing distance	40	Max. operating range in m
	120	Max. operating range in m
	200	Max. operating range in m
	300	Max. operating range in m
	i =	Integrated fieldbus technology
Interface	00	RS 422/RS 232
	01	RS 485
	04	PROFIBUS DP / SSI
	08	TCP/IP
	35	CANopen
	38	EtherCAT
	48	PROFINET RT
	55	DeviceNet
	58	Ethernet/IP
	84	Interbus
	AMS	**A**bsolute **M**easuring **S**ystem

11.2 Type overview AMS 301*i* (RS 485)

Type designation	Description	Part no.
AMS 301*i* 40	40 m operating range, RS 485 interface	50113669
AMS 301*i* 120	120 m operating range, RS 485 interface	50113670
AMS 301*i* 200	200 m operating range, RS 485 interface	50113671
AMS 301*i* 300	300 m operating range, RS 485 interface	50113672
AMS 301*i* 40 H	40 m operating range, RS 485 interface, integrated heating	50113673
AMS 301*i* 120 H	120 m operating range, RS 485 interface, integrated heating	50113674
AMS 301*i* 200 H	200 m operating range, RS 485 interface, integrated heating	50113675
AMS 301*i* 300 H	300 m operating range, RS 485 interface, integrated heating	50113676

Table 11.1: Type overview AMS 301*i*

11.3 Overview of reflector types

Type designation	Description	Part no.
Reflective tape 200x200-S	Reflective tape, 200x200mm, self-adhesive	50104361
Reflective tape 500x500-S	Reflective tape, 500x500mm, self-adhesive	50104362
Reflective tape 914x914-S	Reflective tape, 914x914mm, self-adhesive	50108988
Reflective tape 200x200-M	Reflective tape, 200x200mm, affixed to aluminum plate	50104364
Reflective tape 500x500-M	Reflective tape, 500x500mm, affixed to aluminum plate	50104365
Reflective tape 914x914-M	Reflective tape, 914x914mm, affixed to aluminum plate	50104366
Reflective tape 200x200-H	Heated reflective tape, 200 x 200mm	50115020
Reflective tape 500x500-H	Heated reflective tape, 500 x 500mm	50115021
Reflective tape 914x914-H	Heated reflective tape, 914 x 914mm	50115022

Table 11.2: Overview of reflector types

11.4 Accessories

11.4.1 Accessory mounting bracket

Type designation	Description	Part no.
MW OMS/AMS 01	Mounting bracket for mounting the AMS 301*i* to horizontal surfaces	50107255

Table 11.3: Accessory mounting bracket

11.4.2 Accessory deflector unit

Type designation	Description	Part no.
US AMS 01	Deflector unit with integrated mounting bracket for the AMS 301*i*. Variable 90° deflection of the laser beam in various directions	50104479
US 1 OMS	Deflector unit without mounting bracket for simple 90° deflection of the laser beam	50035630

Table 11.4: Accessory deflector unit

11.4.3 Accessory M12 connector

Type designation	Description	Part no.
KD 02-5-BA	M12 connector, B-coded socket, BUS IN	50038538
KD 02-5-SA	M12 connector, B-coded plug, BUS OUT; SSI	50038537
KD 095-5A	M12 connector, A-coded socket, Power (PWR)	50020501

Table 11.5: Accessory M12 connector

11.4.4 Accessory terminating resistor

Type designation	Description	Part no.
TS 02-4-SA	M12 terminating resistor for RS 485 BUS OUT	50038539

Table 11.6: Accessory terminating resistor

11.4.5 Accessory ready-made cables for voltage supply

Contact assignment/wire color of PWR connection cable

PWR connection cable (5-pin socket, A-coded)			
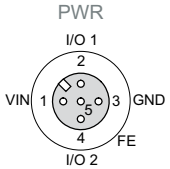 **M12 socket (A-coded)**	**Pin**	**Name**	**Core color**
	1	VIN	**brown**
	2	I/O 1	**white**
	3	GND	**blue**
	4	I/O 2	**black**
	5	FE	**gray**
	Thread	FE	**bare**

Specifications of the cables for voltage supply

Operating temperature range in rest state: -30°C … +70°C
in motion: -5°C … +70°C

Material sheathing: PVC

Bending radius > 50 mm

Order codes of the cables for voltage supply

Type designation	Description	Part no.
K-D M12A-5P-5m-PVC	M12 socket, A-coded, axial plug outlet, open cable end, cable length 5 m	50104557
K-D M12A-5P-10m-PVC	M12 socket, A-coded, axial plug outlet, open cable end, cable length 10 m	50104559

11.4.6 Accessory ready-made cables for RS 485

Contact assignments of RS 485 connection cable

RS 485 BUS IN connection cable (5-pin socket, B-coded, 2-pin cable)

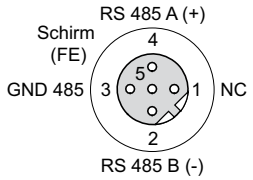

M12 socket (B-coded)

Pin	Name	Core color
1	NC	-
2	RS 485B (-)	**green**
3	GND 485	-
4	RS 485 A (+)	**red**
5	FE	
Thread	FE	**Functional earth (housing)**

RS 485 BUS OUT connection cable (5-pin connector, B-coded, 2-pin cable)

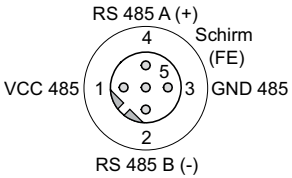

M12 connector (B-coded)

Pin	Name	Core color
1	VCC 485	-
2	RS 485 B (-)	**green**
3	GND 485	-
4	RS 485 A (+)	**red**
5	FE	-
Thread	FE	**Functional earth (housing)**

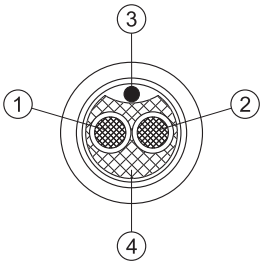

1 Conductor with insulation **red**
2 Conductor with insulation **green**
3 Drain wire
4 Fibrous fleece

Specifications of the RS 485 connection cable

Operating temperature range in rest state: -40°C … +80°C
in motion: -5°C … +80°C

Material the lines comply with the RS 485 requirements, free of halogens, silicone and PVC

Bending radius > 80mm, suitable for drag chains

Order codes for RS 485 connection cables

Type designation	Remark	Part no.
KB PB-2000-BA	M12 socket for BUS IN, axial connector, open cable end, cable length 2m	50104181
KB PB-5000-BA	M12 socket for BUS IN, axial connector, open cable end, cable length 5m	50104180
KB PB-10000-BA	M12 socket for BUS IN, axial connector, open cable end, cable length 10m	50104179
KB PB-15000-BA	M12 socket for BUS IN, axial connector, open cable end, cable length 15m	50104178
KB PB-20000-BA	M12 socket for BUS IN, axial connector, open cable end, cable length 20m	50104177
KB PB-25000-BA	M12 socket for BUS IN, axial connector, open cable end, cable length 25m	50104176
KB PB-30000-BA	M12 socket for BUS IN, axial connector, open cable end, cable length 30m	50104175
KB PB-2000-SA	M12 plug for BUS OUT, axial connector, open cable end, cable length 2m	50104188
KB PB-5000-SA	M12 plug for BUS OUT, axial connector, open cable end, cable length 5m	50104187
KB PB-10000-SA	M12 plug for BUS OUT, axial connector, open cable end, cable length 10m	50104186
KB PB-15000-SA	M12 plug for BUS OUT, axial connector, open cable end, cable length 15m	50104185
KB PB-20000-SA	M12 plug for BUS OUT, axial connector, open cable end, cable length 20m	50104184
KB PB-25000-SA	M12 plug for BUS OUT, axial connector, open cable end, cable length 25m	50104183
KB PB-30000-SA	M12 plug for BUS OUT, axial connector, open cable end, cable length 30m	50104182
KB PB-1000-SBA	M12 plug + M12 socket for PROFIBUS, axial connectors, cable length 1m	50104096
KB PB-2000-SBA	M12 plug + M12 socket for PROFIBUS, axial connectors, cable length 2m	50104097
KB PB-5000-SBA	M12 plug + M12 socket for PROFIBUS, axial connectors, cable length 5m	50104098
KB PB-10000-SBA	M12 plug + M12 socket for PROFIBUS, axial connectors, cable length 10m	50104099
KB PB-15000-SBA	M12 plug + M12 socket for PROFIBUS, axial connectors, cable length 15m	50104100

Type designation	Remark	Part no.
KB PB-20000-SBA	M12 plug + M12 socket for PROFIBUS, axial connectors, cable length 20m	50104101
KB PB-25000-SBA	M12 plug + M12 socket for PROFIBUS, axial connectors, cable length 25m	50104174
KB PB-30000-SBA	M12 plug + M12 socket for PROFIBUS, axial connectors, cable length 30m	50104173

12 Maintenance

12.1 General maintenance information

With normal use, the laser measurement system does not require any maintenance by the operator.

Cleaning

In the event of dust build-up or if the (ATT) warning message is displayed, clean the device with a soft cloth; use a cleaning agent (commercially available glass cleaner) if necessary.

Also check the reflector for possible soiling.

Attention!

Do not use solvents and cleaning agents containing acetone. Use of such solvents could blur the reflector, the housing window and the display.

12.2 Repairs, servicing

Attention!

Access to or changes on the device, except where expressly described in this operating manual, are not authorized.
The device must not be opened. Failure to comply will render the guarantee void. Warranted features cannot be guaranteed after the device has been opened.

Repairs to the device must only be carried out by the manufacturer.

↳ *Contact your Leuze distributor or service organization should repairs be required. The addresses can be found on the inside of the cover and on the back.*

Notice!

When sending the laser measurement systems to Leuze electronic for repair, please provide an accurate description of the error.

12.3 Disassembling, packing, disposing

Repacking

For later reuse, the device is to be packed so that it is protected.

Notice!

Electrical scrap is a special waste product! Observe the locally applicable regulations regarding disposal of the product.

A
Accessories 59
Accessory deflector unit 60
Accessory mounting bracket 60
Accessory ready-made cables 61
Accessory terminating resistor 61
Accuracy 13
Air humidity 14
Alignment 19

B
BUS LED 41

C
Cleaning 65
Communication protocol (binary protocol) . 52
Connections
PWR IN 37
RS 485 BUS IN 37
RS 485 BUS OUT 38
Service 38
Control buttons 42
Control panel 39

D
Declaration of conformity 4
Deflector unit
Maximum ranges 23
With integrated mounting bracket 23
Without mounting bracket 25
Deflector unit US 1 OMS
Dimensioned drawing 25
Deflector unit US AMS 01
Dimensioned drawing 24
Description of functions 5
Diagnostics 55
Dimensioned drawing of AMS 3xxi 15
Display 39

E
Electrical connection 36
Safety notices 36
Expanded diagnostics 56
Explanation of symbols 4

F
Fast commissioning 11

G
General causes of errors 57

H
Heated reflectors
Dimensioned drawing 30
Specifications 29

I
Installation 17
Interface errors 57
Interface info in display 40
Internal hardware error 40

L
LSR status display 57

M
Main menu
Device information 43
Language selection 43
Network information 43
Parameter 43
Service 43
Maintenance 65
Measurement range 13
Measurement value output 13
Menus
Language selection menu 47
Main menu 43
Parameter menu 44
Service menu 48
Mounting 18
with laser beam deflector unit 23
Mounting bracket(optional) 20
Mounting distances 21

N
Name plates 17

O
Operating principle 11
Operating temperature 14
Operation 39, 48
Overview of reflector types 60

P
Packaging 17
Parameter enabling 48, 49
Parameter menu
I/O 46
Maximum position value 45
Other 47
Parameter handling 44
RS 485 44
Parameter setting for AMS 301i 52
Plausibility error 40
Prefailure message 40
PWR LED 41

Q
Quality assurance 4
Querying AMS 301i data (request) 52

R
Received signal 40
Reflective tape
Dimensioned drawing 28
Specifications 27
Reflector 26
Mounting 32
Pitch 35
Size 31
Type overview 31
Repair 65
RS 485 interface 50
Default settings 52

S
Sensing distance 59
Servicing 65
Specifications 13
Dimensioned drawing 15
General specifications 13
Reflective tapes 26
Status and measurement data - main menu 43
Status- and warning messages 39
Status display 39
ATT 57
ERR 57
PLB 57
TMP 57
Status display in the display 57
Status displays 41
Status messages 55
Storage 17
Storage temperature 14
Supply voltage 13
Surface reflections 33
Symbols 4

T
Temperature monitoring 40
Termination 38
Transport 17
Troubleshooting 55
Type overview 16, 59

Level 1 ▲▼ : selection	Level 2 ▲▼ : selection ESC : back	Level 3 ▲▼ : selection ESC : back	Level 4 ▲▼ : selection ESC : back	Level 5 ▲▼ : selection ESC : back	Selection/configuration option ▲▼ : selection ↵ : activate ESC : back	Detailed information on
Device information						page 41
Network information						page 41
Status- and measurement data						page 41
Parameter ↵	Parameter handling	↵ Parameter enabling			ON / OFF	page 42
		↵ Password	↵ Activate password		ON / OFF	
			↵ Password entry		Configuration option of a four-digit numerical password	
		↵ Parameters to default			All parameters are reset to their factory settings	
	↵ RS 485	↵ Activation			ON / OFF	page 42
		↵ Address			Address of the AMS 301*i*	
		↵ Baud rate			9.6 kbit/s / 19.2 kbit/s / 38.4 kbit/s / 57.6 kbit/s / 115.2 kbit/s	
		↵ Format			… 8,n,1 / … 8,e,1 / … 8,o,1	
		↵ Position resolution			0.01 mm / 0.1 mm / 1 mm / 10 mm / free resolution	
		↵ Resolution - velocity			1 mm/s / 10 mm/s / 100 mm/s	
	↵ Maximum position value	↵ Measurement unit			Metric/Inch	page 43
		↵ Count direction			Positive/Negative	
		↵ Offset			Value input:	
		↵ Preset			Value input	
		↵ Error delay			ON / OFF	
		↵ Position value in the case of error			Last valid value / zero	
		↵ Free resolution value			5 …50000	
	↵ I/O	↵ I/O 1	↵ Port configuration		Input/Output	page 44
			↵ Switching input	↵ Function	No function/preset teach/laser ON/OFF	
				↵ Activation	Low active/High active	
			↵ Switching output	↵ Function	Pos. limit value 1 / pos. limit value 2 / speed / intensity (ATT) / temp. (TMP) / laser (LSR) / plausibility (PLB) / hardware (ERR)	
				↵ Activation	Low active/High active	
		↵ I/O 2	↵ Port configuration		Input/Output	
			↵ Switching input	↵ Function	No function/preset teach/laser ON/OFF	
				↵ Activation	Low active/High active	
			↵ Switching output	↵ Function	Pos. limit value 1 / pos. limit value 2 / speed / intensity (ATT) / temp. (TMP) / laser (LSR) / plausibility (PLB) / hardware (ERR)	
				↵ Activation	Low active/High active	

			Limit values		Upper pos. limit 1	Activation	ON / OFF	
						Limit value input	Value input in mm or inch/100	
					Lower pos. limit 1	Activation	ON / OFF	
						Limit value input	Value input in mm or inch/100	
					Upper pos. limit 2	Activation	ON / OFF	
						Limit value input	Value input in mm or inch/100	
					Lower pos. limit 2	Activation	ON / OFF	
						Limit value input	Value input in mm or inch/100	
					Max. velocity	Activation	ON / OFF	
						Max. velocity	Value input in mm/s or inch/100s	
		Other	Heating control				Standard/extended (10°C … 15°C/30°C … 35°C)	page 45
			Display background				10 minutes/ON	
			Display contrast				Weak/Medium/Strong	
			Service RS232		Baud rate		57.6 kbit/s / 115.2 kbit/s	
					Format		8,e,1 / 8,n,1	
Language selection							Deutsch / English / Español / Français / Italiano	page 45
Service		Status messages						page 46
		Diagnostics					Exclusively for service purposes by Leuze electronic	
		Expanded diagnostics					Exclusively for service purposes by Leuze electronic	