Leuze electronic

the sensor people

AMS 304*i*

Optical Laser Measurement System
PROFIBUS / SSI

en 03-2014/12 50113335
We reserve the right to
make technical changes

TECHNICAL DESCRIPTION

ПРОМЭЛЕКТРОНИКА / sales@prom-elec.com

© 2014
Leuze electronic GmbH + Co. KG
In der Braike 1
D-73277 Owen - Teck / Germany
Phone: +49 7021 573-0
Fax: +49 7021 573-199
http://www.leuze.com
info@leuze.de

The main menus

```
AMS 304i 120
Leuze electronic
      GmbH & Co. KG
SW: V 1.3.0   HW:1
SN: ----------------------
```

Device information - main menu

This menu item contains detailed information on
- Device model,
- Manufacturer,
- Software and hardware version,
- Serial number.

No entries can be made via the display.

```
Network information
Address:       ---
Baud rate:    --- kbit/s
```

Network information - main menu

Explanations of address and baud rate.
No entries can be made via the display.

```
IO1 LSR PLB        98
IO2 TMP ATT        PB
ERR                SSI
  + 87.000m
```

Status- and measurement data - main menu

- Display of status-, warning-, and error messages.
- Status overview of the switching inputs/outputs.
- Bar graph for the reception level.
- Activated interface.
- Measurement value.

No entries can be made via the display.
See "Indicators in the display" on page 39.

```
Parameter
  Parameter handling
  PROFIBUS
  SSI
  Position value
  I/O
```

Parameter - main menu

Configuration for PROFIBUS is carried out via the modules of the GSD file.

```
Language selection
o Deutsch
● English
o Español
o Français
o Italiano
```

Language selection - main menu

- Selection of the display language.

See "Language selection menu" on page 48.

```
Service
  Status messages
  Diagnostics
  Expanded diagnostics
```

Service - main menu

- Display of status messages.
- Display of diagnostic data.

No entries can be made via the display.
See "Service menu" on page 49.

Device buttons:

- Navigate **upward/laterally**
- Navigate **downward/laterally**
- ESC **ESCAPE** leave
- **ENTER** confirm

Input of values

```
100
 <-0123456789     save
Standard ----- Unit
   126  |     |
```

- ◄ + ↵ **Delete character**
- 0...9 + ↵ **Enter digit**
- save + ↵ **Save input**

1 General information 5
1.1 Explanation of symbols 5
1.2 Declaration of conformity 5
1.3 Description of functions AMS 304*i* 6

2 Safety 7
2.1 Intended use 7
2.2 Foreseeable misuse 8
2.3 Competent persons 8
2.4 Disclaimer 9
2.5 Laser safety notices 9

3 Fast commissioning / operating principle 12
3.1 Mounting the AMS 304*i* 12
3.1.1 Mounting the device 12
3.1.2 Mounting the reflector 12
3.2 Connecting the voltage supply 13
3.3 Display 13
3.4 AMS 304*i* on the PROFIBUS 13

4 Specifications 14
4.1 Specifications of the laser measurement system 14
4.1.1 General specifications AMS 304*i* 14
4.1.2 Dimensioned drawing AMS 304*i* 16
4.1.3 Type overview AMS 304*i* 17

5 Installation and mounting 18
5.1 Storage, transportation 18
5.2 Mounting the AMS 304*i* 19
5.2.1 Optional mounting bracket 21
5.2.2 Parallel mounting of the AMS 304*i* 22
5.2.3 Parallel mounting of AMS 304*i* and DDLS optical data transmission 23
5.3 Mounting the AMS 304*i* with laser beam deflector unit 24
5.3.1 Mounting the laser beam deflector unit With integrated mounting bracket 24
5.3.2 Dimensioned drawing of US AMS 01 deflector unit 25
5.3.3 Mounting the US 1 OMS deflector unit without mounting bracket 26

6 Reflectors 27

6.1 General information 27

6.2 Description of the reflective tape 27
6.2.1 Specifications of the self-adhesive foil 28
6.2.2 Specifications of the reflective tape on a metal plate 28
6.2.3 Dimensioned drawing of reflective tape on a metal plate 29
6.2.4 Specifications of heated reflectors 30
6.2.5 Dimensioned drawing of heated reflectors 31

6.3 Selecting reflector sizes 32

6.4 Mounting the reflector 33
6.4.1 General information 33
6.4.2 Mounting the reflector 33
6.4.3 Table of reflector pitches 36

7 Electrical connection 37

7.1 Safety notices for the electrical connection 37

7.2 PWR – voltage supply / switching input/output 38

7.3 PROFIBUS BUS IN 38

7.4 PROFIBUS BUS OUT 39

7.5 SSI 39

7.6 Service 40

8 Display and control panel AMS 304*i* 41

8.1 Structure of the control panel 41

8.2 Status display and operation 41
8.2.1 Indicators in the display 41
8.2.2 LED status displays 43
8.2.3 Control buttons 44

8.3 Menu description 45
8.3.1 The main menus 45
8.3.2 Parameter menu 46
8.3.3 Language selection menu 50
8.3.4 Service menu 51

8.4 Operation 51

9 PROFIBUS interface 53

9.1 General information on PROFIBUS 53

9.2 PROFIBUS electrical connection 54
9.3 PROFIBUS address entry 55
9.3.1 Entering the PROFIBUS addresses via the display 55
9.4 PROFIBUS GSD file 55
9.4.1 General information on the GSD file 55
9.4.2 Overview of the GSD modules 57
9.4.3 Detail description of the modules 59

10 SSI 95

10.1 Principle functionality of the SSI interface 95
10.1.1 SSI sequence diagram 96
10.1.2 Cable length as a function of the data rate. 97
10.2 SSI - Electrical connection 97
10.3 General Information to the AMS 304*i* parameters 98
10.4 Default settings of the SSI interface 98
10.4.1 Changing the SSI settings via the display 99

11 Diagnostics and troubleshooting 100

11.1 Service and diagnostics in the display of the AMS 304*i* 100
11.1.1 Status messages 100
11.1.2 Diagnostics 101
11.1.3 Expanded diagnostics 101
11.2 General causes of errors 102
11.2.1 Power LED 102
11.3 Interface errors. 102
11.3.1 BUS LED 102
11.4 Status display in the display of the AMS 304*i* 102

12 Type overview and accessories 104

12.1 Type key 104
12.2 Type overview AMS 304*i* (PROFIBUS) 104
12.3 Overview of reflector types 105
12.4 Accessories 105
12.4.1 Accessory mounting bracket 105
12.4.2 Accessory deflector unit 105
12.4.3 Accessory M12 connector 105
12.4.4 Accessory terminating resistor 106

12.4.5 Accessory ready-made cables for voltage supply 106
12.4.6 Accessory ready-made cables for PROFIBUS 107

13 Maintenance 110

13.1 General maintenance information 110

13.2 Repairs, servicing 110

13.3 Disassembling, packing, disposing 110

1 General information

1.1 Explanation of symbols

The symbols used in this operating manual are explained below.

Attention!

This symbol precedes text messages which must strictly be observed. Failure to comply with this information results in injuries to personnel or damage to the equipment.

Attention Laser!

This symbol warns of possible danger caused by hazardous laser radiation.

Notice!

This symbol indicates text passages containing important information.

1.2 Declaration of conformity

The AMS 304*i* absolute measuring optical laser measurement system was designed and manufactured in accordance with applicable European directives and standards.

The AMS series is "UL LISTED" according to American and Canadian safety standards and fulfills the requirements of Underwriter Laboratories Inc. (UL).

Notice!

The Declaration of Conformity for these devices can be requested from the manufacturer.

The manufacturer of the product, Leuze electronic GmbH + Co. KG in D-73277 Owen/Teck, possesses a certified quality assurance system in accordance with ISO 9001.

1.3 Description of functions AMS 304*i*

The AMS 304*i* optical laser measurement system calculates distances to fixed as well as moving system parts. The distance to be measured is calculated according to the principle of the propagation time of radiated light. Here, the light emitted by the laser diode is reflected by a reflector onto the receiving element of the laser measurement system. The AMS 304*i* uses the "propagation time" of the light to calculate the distance to the reflector. The high absolute measurement accuracy of the laser measurement system and the fast integration time are designed for position control applications.

With the AMS 3xx*i* product series, Leuze electronic makes available a range of internationally relevant interfaces. Note that each interface version listed below corresponds to a different AMS 3xx*i* model.

PROFIBUS, SSI	**AMS 304*i***
PROFINET	**AMS 348*i***
DeviceNet	**AMS 355*i***
EtherNet/IP	**AMS 358*i***
CANopen	**AMS 335*i***
EtherCAT	**AMS 338*i***
Ethernet	**AMS 308*i***
INTERBUS	**AMS 384*i***
RS485	**AMS 301*i***
RS232, RS422	**AMS 300*i***

2 Safety

This sensor was developed, manufactured and tested in line with the applicable safety standards. It corresponds to the state of the art.

2.1 Intended use

The AMS is an absolute measuring optical laser measurement system which allows distance measurement of up to 300m against a reflector.

Areas of application

The AMS is designed for the following areas of application:

- Positioning of automated, moving plant components
- Travel and lifting axes of high-bay storage devices
- Repositioning units
- Gantry crane bridges and their trolleys
- Lifts
- Electroplating plants

CAUTION

Observe intended use!

- Only operate the device in accordance with its intended use. The protection of personnel and the device cannot be guaranteed if the device is operated in a manner not complying with its intended use.
  Leuze electronic GmbH + Co. KG is not liable for damages caused by improper use.
- Read the technical description before commissioning the device. Knowledge of this technical description is an element of proper use.

NOTICE

Comply with conditions and regulations!

- Observe the locally applicable legal regulations and the rules of the employer's liability insurance association.

Attention

For UL applications, use is permitted exclusively in Class 2 circuits according to NEC (National Electric Code).

2.2 Foreseeable misuse

Any use other than that defined under "Intended use" or which goes beyond that use is considered improper use.

In particular, use of the device is not permitted in the following cases:

- Rooms with explosive atmospheres
- Circuits relevant to safety
- For medicinal purposes

NOTICE
Do not modify or otherwise interfere with the device. ↳ Do not carry out modifications or otherwise interfere with the device. The device must not be tampered with and must not be changed in any way. The device must not be opened. There are no user-serviceable parts inside. Repairs must only be performed by Leuze electronic GmbH + Co. KG.

2.3 Competent persons

Connection, mounting, commissioning and adjustment of the device must only be carried out by competent persons.

Prerequisites for competent persons:

- They have a suitable technical education.
- They are familiar with the rules and regulations for occupational safety and safety at work.
- They are familiar with the technical description of the device.
- They have been instructed by the responsible person on the mounting and operation of the device.

Certified electricians

Electrical work must be carried out by a certified electrician.

Due to their technical training, knowledge and experience as well as their familiarity with relevant standards and regulations, certified electricians are able to perform work on electrical systems and independently detect possible dangers.

In Germany, certified electricians must fulfill the requirements of accident-prevention regulations BGV A3 (e.g. electrician foreman). In other countries, there are respective regulations that must be observed.

2.4 Disclaimer

Leuze electronic GmbH + Co. KG is not liable in the following cases:

- The device is not being used properly.
- Reasonably foreseeable misuse is not taken into account.
- Mounting and electrical connection are not properly performed.
- Changes (e.g., constructional) are made to the device.

2.5 Laser safety notices

ATTENTION LASER RADIATION – LASER CLASS 2

Never look directly into the beam!

The device satisfies the requirements of IEC 60825-1:2007 (EN 60825-1:2007) safety regulations for a product in **laser class 2** as well as the U.S. 21 CFR 1040.10 regulations with deviations corresponding to "Laser Notice No. 50" from June 24th, 2007.

- Never look directly into the laser beam or in the direction of reflecting laser beams.
  If you look into the beam path over a longer time period, there is a risk of injury to the retina.
- Do not point the laser beam of the device at persons!
- Interrupt the laser beam using a non-transparent, non-reflective object if the laser beam is accidentally directed towards a person.
- When mounting and aligning the device, avoid reflections of the laser beam off reflective surfaces!
- CAUTION! The use of operating or adjusting devices other than those specified here or carrying out of differing procedures may lead to dangerous exposure to radiation.
- Adhere to the applicable legal and local regulations regarding protection from laser beams.
- The device must not be tampered with and must not be changed in any way.
  There are no user-serviceable parts inside the device.
  Repairs must only be performed by Leuze electronic GmbH + Co. KG.

NOTICE

Affix laser information and warning signs!

Laser information and warning signs are attached to the device (see figure 2.1):

In addition, self-adhesive laser warning and information signs (stick-on labels) are supplied in several languages (see figure 2.2).

- Affix the laser information sheet to the device in the language appropriate for the place of use.
  When using the device in the US, use the stick-on label with the "Complies with 21 CFR 1040.10" notice.
- Affix the laser information and warning signs near the device if no signs are attached to the device (e.g., because the device is too small) or if the attached laser information and warning signs are concealed due to the installation position.
  Affix the laser information and warning signs so that they are legible without exposing the reader to the laser radiation of the device or other optical radiation.

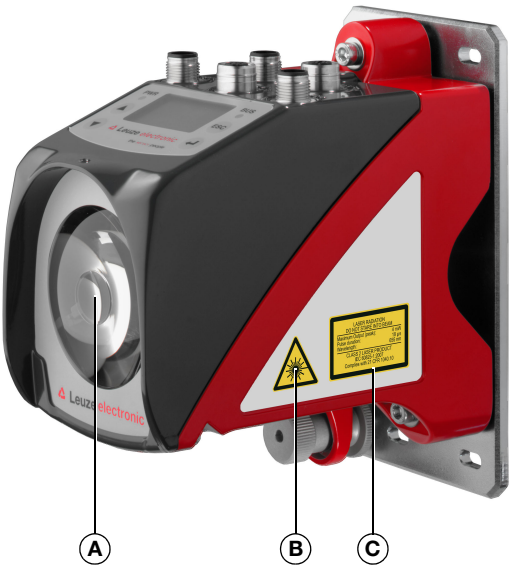

A Laser aperture
B Laser warning sign
C Laser information sign with laser parameters

Figure 2.1: Laser apertures, laser warning signs

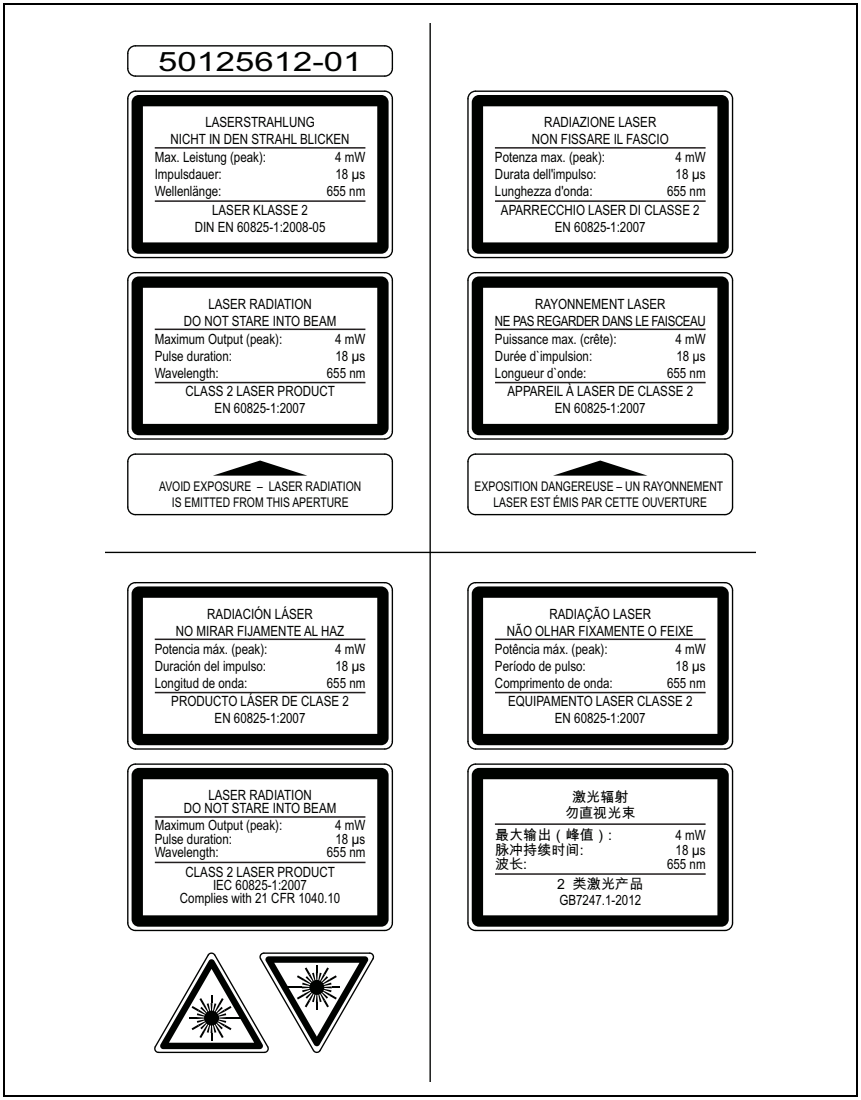

Figure 2.2: Laser warning and information signs – supplied stick-on labels

3 Fast commissioning / operating principle

Notice!

*Below, you will find a **short description for the initial commissioning** of the AMS 304i. Detailed explanations for the listed points can be found throughout the handbook.*

3.1 Mounting the AMS 304*i*

The AMS 304*i* and the corresponding reflector are mounted on two mutually opposing, plane-parallel, flat walls.

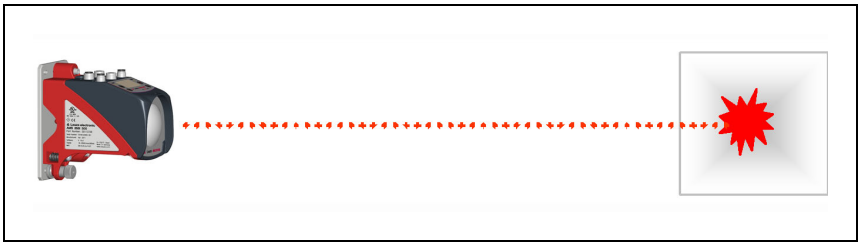

Figure 3.1: Schematic illustration of mounting

Attention!

For error-free position measurement, there must be an unobstructed line-of-sight between the AMS 304*i and the reflector.*

3.1.1 Mounting the device

The laser is mounted on a vertical wall using 4 screws (M5).

Alignment is performed using 2 adjustment screws. Adjust so that the laser light spot is positioned at the center of the reflector. The alignment is to be secured with the knurled nut and locked with the M5 nut.

Further information can be found in chapter 5.2 and chapter 5.3.

3.1.2 Mounting the reflector

The reflector is mounted on a vertical wall with 4 screws (M5). The reflector is angled using the included shims. Incline the reflector by approx. 1°.

Detailed information can be found in chapter 6.4.

3.2 Connecting the voltage supply

The laser measurement system is connected using M12 connectors. The voltage supply is connected via the PWR M12 connection.

Detailed information can be found in chapter 7.

3.3 Display

Once the laser measurement system is supplied with voltage, the device status as well as the measured position values can be read on the display. The display automatically switches to the display of the measurement values.

Use the up/down buttons ▲ ▼ to the left of the display to read and change a wide range of data and parameters.

Depending on connected interface, the network address or IP addresses must be configured via the display.

Detailed information can be found in chapter 8.

3.4 AMS 304*i* on the PROFIBUS

Install the GSD file associated with the AMS 304*i* in the PROFIBUS Manager of your control. Activate the desired modules (at least one module).

Store the slave address for the AMS 304*i* in the PROFIBUS manager. Ensure that the address is the same as the address configured in the device.

Detailed information can be found in chapter 9.

4 Specifications

4.1 Specifications of the laser measurement system

4.1.1 General specifications AMS 304*i*

Measurement data	AMS 304*i* 40 (H)	AMS 304*i* 120 (H)	AMS 304*i* 200 (H)	AMS 304*i* 300 (H)
Measurement range	0.2 … 40 m	0.2 … 120 m	0.2 … 200 m	0.2 … 300 m
Accuracy	± 2 mm	± 2 mm	± 3 mm	± 5 mm
Consistency [1]	0.3 mm	0.5 mm	0.7 mm	1.0 mm
Light spot diameter	≤ 40 mm	≤ 100 mm	≤ 150 mm	≤ 225 mm
Measurement value output	1.7 ms			
Integration time	8 ms			
Resolution	adjustable, see chapter of the individual interfaces			
Temperature drift	≤ 0.1 mm/K			
Ambient temperature sensitivity	1 ppm/K			
Air pressure sensitivity	0.3 ppm/hPa			
Traverse rate	≤ 10 m/s			
Electrical data				
Supply voltage Vin [2]	18 … 30 VDC			
Current consumption	without device heating: ≤ 250 mA / 24 VDC with device heating: ≤ 500 mA / 24 VDC			
Optical data				
Transmitter	laser diode, red light, wavelength 650 … 690 nm			
Laser class	2 acc. to EN 60825-1, CDRH			
Interfaces				
PROFIBUS DP to V, V1	≤ 12 Mbit/s			
SSI clock rate	50 kHz … 800 kHz			
Operating and display elements				
Keyboard	4 buttons			
Display	monochromatic graphical display, 128 x 64 pixels			
LED	2 LEDs, two-colored			

Inputs/outputs	
Quantity	2, programmable
Input	protected against polarity reversal
Output	max. 60 mA, short-circuit proof
Mechanical data	
Housing	cast zinc and aluminum
Optics	glass
Weight	approx. 2.45 kg
Protection class	IP 65 acc. to EN 60529 [3]
Environmental conditions	
Operating temperature	
without device heating	-5 °C … +50 °C
with device heating	-30 °C … +50 °C [4]
Storage temperature	-30 °C … +70 °C
Air humidity	max. 90 % rel. humidity, non-condensing
Mechanical/electrical loading capacity	
Vibrations	acc. to EN 60068-2-6
Noise	acc. to EN 60060-2-64
Shock	acc. to EN 60068-2-27
EMC	acc. to EN 61000-6-2 and EN 61000-6-4 [5]

1) Statistical error: 1 sigma; minimum switch-on time: 2 min.
2) For UL applications: only for use in "Class 2" circuits acc. to NEC.
3) With screwed-on M12 plugs or mounted caps.
4) With devices with heating, the switch on/off area of the internal heating can be extended to prevent condensation from forming. A 100% prevention of the formation of condensation cannot be guaranteed due to the limited heating capacity of the AMS 304*i*.
5) This is a Class A product. In a domestic environment this product may cause radio interference, in which case the operator may be required to take adequate measures.

The AMS 304*i* is designed in accordance with safety class III for supply with PELV (protective extra-low voltage).

4.1.2 Dimensioned drawing AMS 304*i*

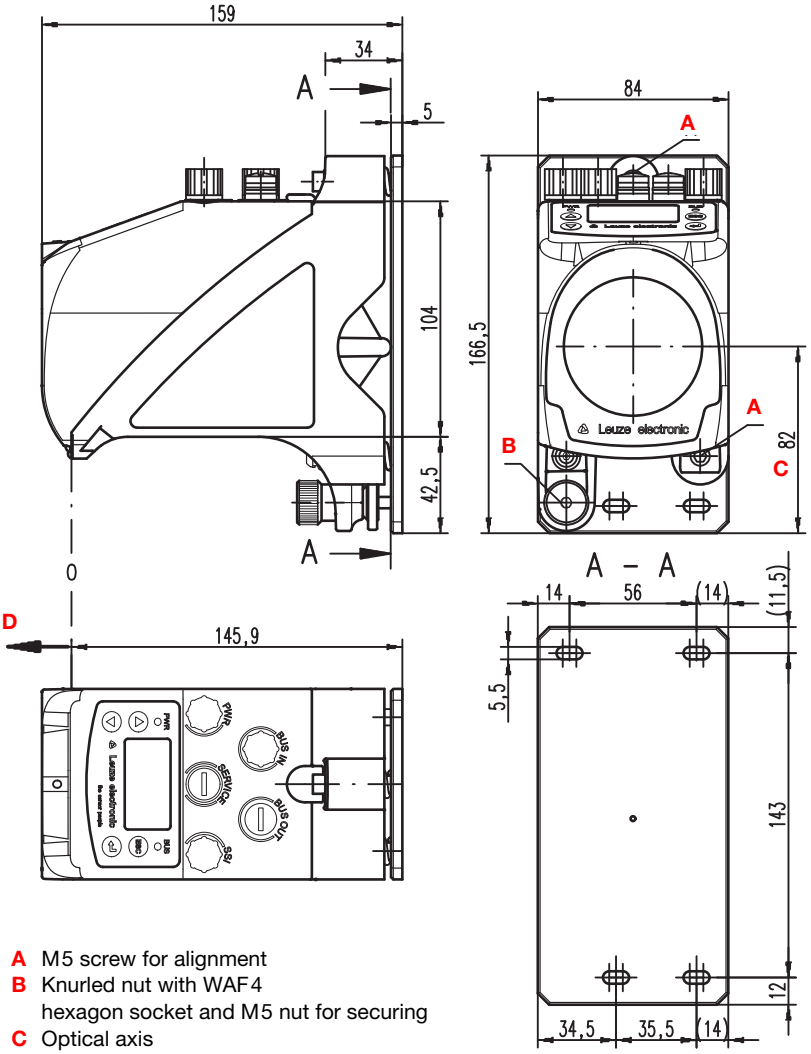

Figure 4.1: Dimensioned drawing AMS 304*i*

4.1.3 Type overview AMS 304*i*

AMS 304i (PROFIBUS)

Type designation	Description	Part no.
AMS 304*i* 40	40 m operating range, PROFIBUS/SSI interface	50113677
AMS 304*i* 120	120 m operating range, PROFIBUS/SSI interface	50113678
AMS 304*i* 200	200 m operating range, PROFIBUS/SSI interface	50113679
AMS 304*i* 300	300 m operating range, PROFIBUS/SSI interface	50113680
AMS 304*i* 40 H	40 m operating range, PROFIBUS/SSI interface, integrated heating	50113681
AMS 304*i* 120 H	120 m operating range, PROFIBUS/SSI interface, integrated heating	50113682
AMS 304*i* 200 H	200 m operating range, PROFIBUS/SSI interface, integrated heating	50113683
AMS 304*i* 300 H	300 m operating range, PROFIBUS/SSI interface, integrated heating	50113684

Table 4.1: Type overview AMS 304*i*

5 Installation and mounting

5.1 Storage, transportation

Attention!

When transporting or storing, package the device so that it is protected against collision and humidity. Optimum protection is achieved when using the original packaging. Heed the required environmental conditions specified in the technical data.

Unpacking

- *Check the packaging for any damage. If damage is found, notify the post office or shipping agent as well as the supplier.*
- *Check the delivery contents using your order and the delivery papers:*
  - Delivered quantity
  - Device type and model as indicated on the nameplate
  - Brief manual

The name plate provides information as to what AMS 304*i* type your device is. For specific information, please refer to chapter 12.2.

Name plates

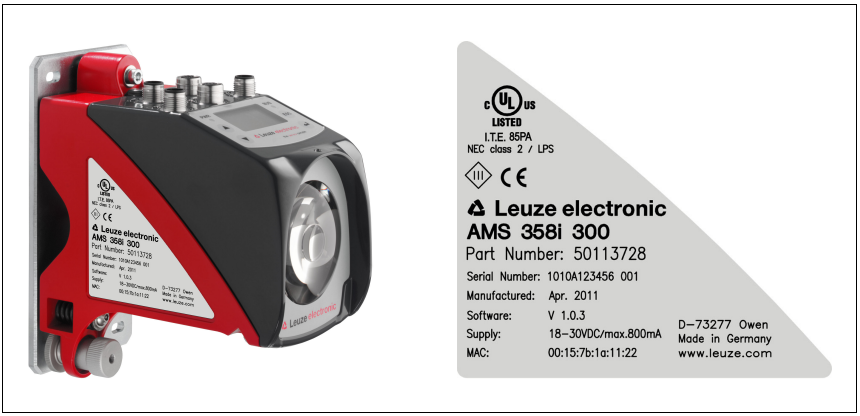

Figure 5.1: Device name plate using the AMS 300*i* as an example

Notice!

Please note that the shown name plate is for illustration purposes only; the contents do not correspond to the original.

- *Save the original packaging for later storage or shipping.*

If you have any questions concerning your shipment, please contact your supplier or your local Leuze electronic sales office.

Observe the applicable local regulations when disposing of the packaging materials.

5.2 Mounting the AMS 304*i*

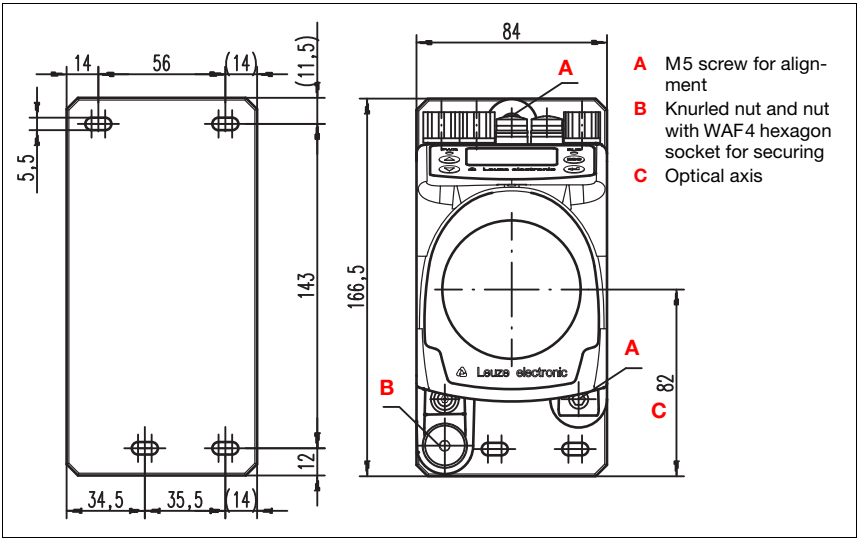

Figure 5.2: Mounting the device

The AMS 304*i* and the corresponding reflector are mounted on two mutually opposing, plane-parallel, flat walls or system parts. For error-free position measurement, there must be an unobstructed line-of-sight connection between the AMS 304*i* and the reflector.

Use M5 screws to fasten the laser measurement system. Secure the screws with a toothed lock washer to protect against loosening caused by vibrations.

Aligning the laser light spot in the center of the reflector

The laser light spot has to be aligned so that it always hits the center of the opposing reflector, both at close range as well as at the maximum measurement distance. **To align, use the two M5 Allen screws** ("**A**" in figure 5.2). When aligning please ensure that the knurled nut and the lock nut ("**B**" in figure 5.2) are opened wide.

Attention!

To prevent the laser measurement system from moving out of alignment during continuous operation, subsequently hand-tighten the knurled nut and counterlock with the nut with WAF4 hexagon socket ("B" in figure 5.2). Knurled nut and nut must not be tightened until alignment has been completed.

Attention!

The device must not be opened. Failure to comply will render the guarantee void. Warranted features cannot be guaranteed after the device has been opened.

5.2.1 Optional mounting bracket

A mounting bracket for mounting the AMS 304*i* on a flat, horizontal surface is available as an optional accessory.

Type designation: MW OMS/AMS 01

Part no.: 50107255

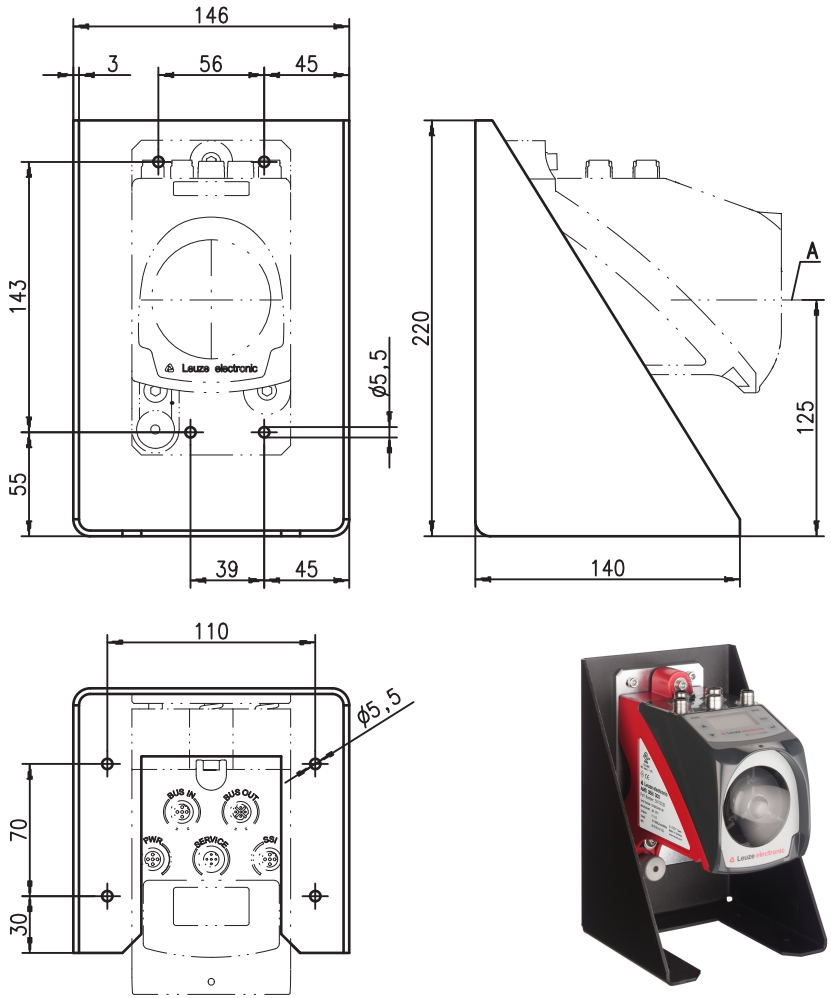

A Laser beam

Figure 5.3: Optional mounting bracket

5.2.2 Parallel mounting of the AMS 304*i*

Definition of the term "parallel spacing"

As shown in figure 5.4, dimension X describes the "parallel spacing" of the inner edges of the two laser light spots on the reflector.

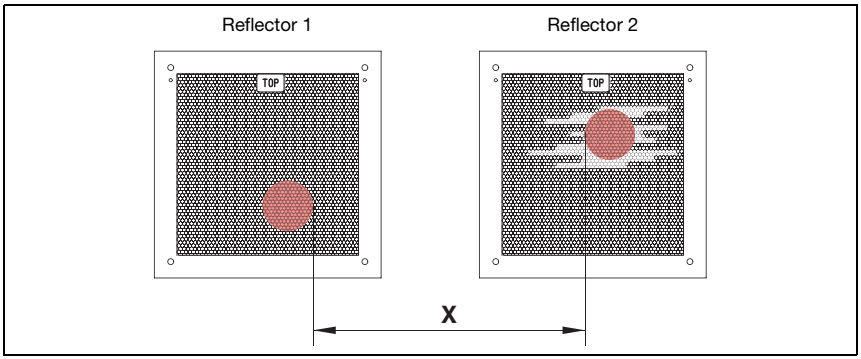

Figure 5.4: Minimum parallel spacing X between adjacent AMS 304*i*

The diameter of the light spot increases with distance.

	AMS 304*i* 40 (H)	AMS 304*i* 120 (H)	AMS 304*i* 200 (H)	AMS 304*i* 300 (H)
Max. measurement distance	40 m	120 m	200 m	300 m
Light spot diameter	≤ 40 mm	≤ 100 mm	≤ 150 mm	≤ 225 mm

Thus, the center-to-center spacing of the two AMS 304*i* devices with respect to one another can be calculated as a function of the maximum measurement distance.

To define the minimum parallel spacing between two AMS 304*i*, it is necessary to distinguish between three different arrangements of AMS 304*i* and reflectors.

The AMS 304*i* are mounted stationary and in parallel on one plane. Both reflectors move independently of one another at different distances to the AMS 304*i*.

Minimum parallel spacing X of the two laser light spots:

X = 100 mm + (max. measurement distance in mm x 0.01)

The AMS 304*i* are mounted stationary and in parallel on one plane. Both reflectors move in parallel at the same distance to the AMS 304*i*.

Measurement distance **up to 120 m**: minimum parallel spacing **X ≥ 600 mm**

Measurement distance **up to 200 m**: minimum parallel spacing **X ≥ 750 mm**

Measurement distance **up to 300 m**: minimum parallel spacing **X ≥ 750 mm**

The reflectors are mounted stationary and in parallel on one plane.
Both AMS 304*i* move independently of one another at different or the same distances to the reflectors.

Measurement distance **up to 120 m**: minimum parallel spacing **X ≥ 600 mm**

Measurement distance **up to 200 m**: minimum parallel spacing **X ≥ 750 mm**

Measurement distance **up to 300 m**: minimum parallel spacing **X ≥ 750 mm**

Notice!

*Please note that when the AMS 304*i* are mounted in a mobile manner, travel tolerances could cause the two laser light spots to move towards each other.*
*Take the travel tolerances of the vehicle into account when defining the parallel spacing of adjacent AMS 304*i*.*

5.2.3 Parallel mounting of AMS 304*i* and DDLS optical data transmission

The optical data transceivers of the DDLS series and the AMS 304*i* do not interfere with one another. Depending on the size of the used reflector, the DDLS can be mounted with a minimum parallel spacing of 100 mm to the AMS 304*i*. The parallel spacing is independent of the distance.

5.3 Mounting the AMS 304*i* with laser beam deflector unit

General information

The two available deflector units are used for the 90° deflection of the laser beam, see "Accessory deflector unit" on page 105.

Attention!

The deflector units are designed for a maximum range of 40m.
Longer distances on request.

5.3.1 Mounting the laser beam deflector unit With integrated mounting bracket

The AMS 304*i* is screwed onto the mechanism of the US AMS 01 deflector unit. The mirror can be mounted for three deflection directions:

1. Upward beam deflection
2. Beam deflection to the left
3. Beam deflection to the right

The deflector unit is mounted on plane-parallel, flat walls or plant components. For error-free position measurement, there must be an interruption-free line-of-sight between the AMS 304*i*… and the deflection mirror as well as between the mirror and the reflector.

Use the M5 screws to mount the deflector unit. Secure the screws with a toothed lock washer to protect against loosening caused by vibrations.

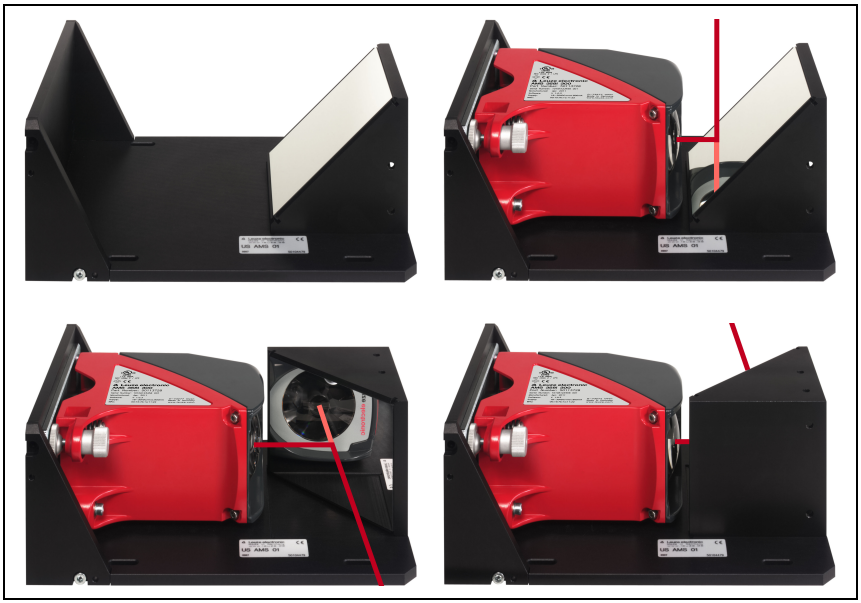

Figure 5.5: Mounting variants of the US AMS 01 laser beam deflector unit

5.3.2 Dimensioned drawing of US AMS 01 deflector unit

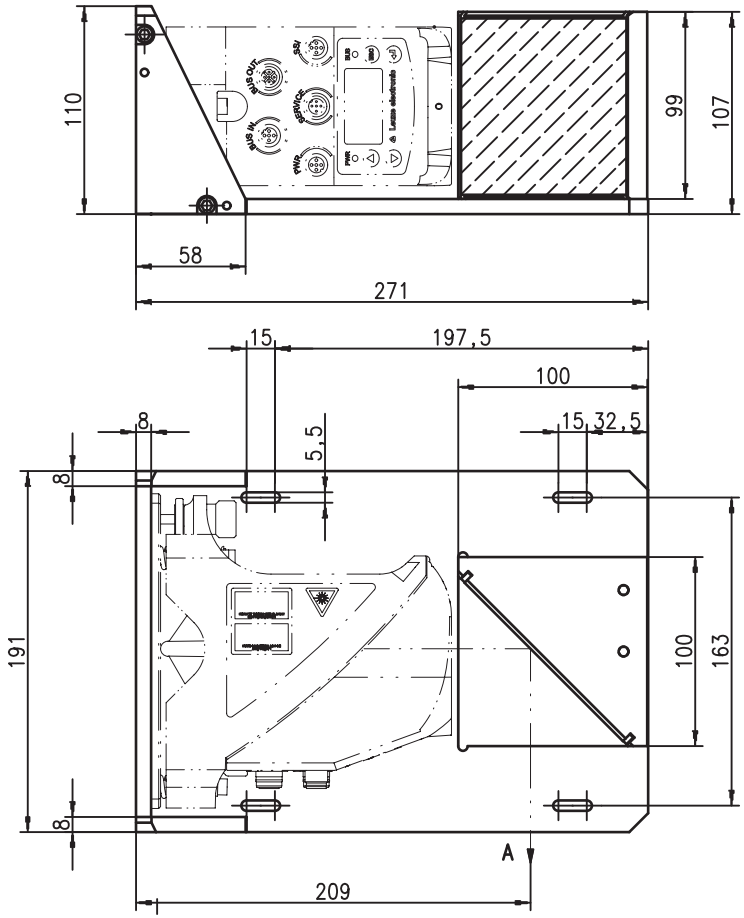

A Laser beam

Figure 5.6: Dimensioned drawing of US AMS 01 deflector unit

5.3.3 Mounting the US 1 OMS deflector unit without mounting bracket

The US 1 OMS deflector unit and the AMS 304*i* are mounted separately.

Notice!

When mounting, make certain that the laser light spot of the AMS 304i is aligned in the center of the deflection mirror.

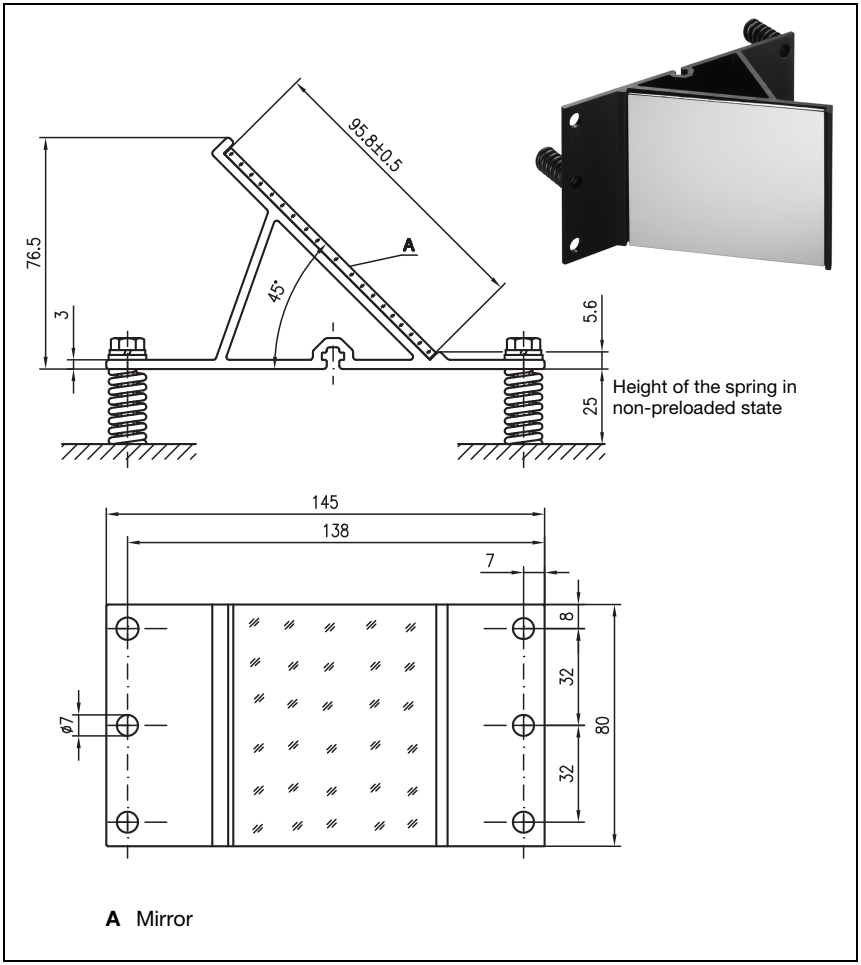

Figure 5.7: Photo and dimensioned drawing of the US 1 OMS deflector unit

Alignment of the laser light spot on the reflector is performed as described in chapter 5.2.

6 Reflectors

6.1 General information

The AMS 304*i* measures distances against a reflective tape specified by Leuze electronic. All provided specifications for the AMS 304*i*, such as the operating range or accuracy, can only be achieved with the reflective tape specified by Leuze electronic.

The reflective tapes are available as adhesive tapes, affixed to a metal plate and with an integrated heater especially for use at low temperatures. Reflective tapes with heating have the designation "**Reflective tape ...x...-H**", where "**H**" is an abbreviation for the heating variant.

The reflective tapes/reflectors must be ordered separately. The choice of size is left to the user. In chapter 6.3, recommendations on reflector size are provided as a function of the distance that is to be measured. In any case, the user must check to determine whether the recommendation is suitable for the respective application.

6.2 Description of the reflective tape

The reflective tape consists of a white, microprism-based reflective material. The microprisms are protected with a highly transparent, hard protective layer.

Under certain circumstances, the protective layer may lead to surface reflections. The surface reflections can be directed past the AMS 304*i* by positioning the reflective tape at a slight incline. The inclination of the reflective tape/reflectors is described in chapter 6.4.2. The required pitch can be found in table 6.1 "Reflector pitch resulting from spacer sleeves" on page 36.

The reflective tapes are provided with a protective foil that can easily be pulled off. This must be removed from the reflector before the complete system is put into operation.

6.2.1 Specifications of the self-adhesive foil

	Part		
Type designation	**Reflective tape 200x200-S**	**Reflective tape 500x500-S**	**Reflective tape 914x914-S**
Part no.	50104361	50104362	50108988
Foil size	200x200mm	500x500mm	914x914mm
Recommended application temperature for adhesive tape	+5°C … +25°C		
Temperature resistance, affixed	-40°C … +80°C		
Mounting surface	The mounting surface must be clean, dry and free of grease.		
Cutting the tape	Cut with a sharp tool, always on the side of the prism structure.		
Cleaning	Do not use any agents that act with a grinding effect. A conventional household detergent can be used as a cleaning agent. Rinse with clear water and dry the surface.		
Storing the foil	Store in a cool and dry place.		

6.2.2 Specifications of the reflective tape on a metal plate

The reflective tape is affixed to a metal plate. Included with the metal plate are spacers for positioning at an incline - for avoiding surface reflections - (see chapter 6.4.2 "Mounting the reflector").

	Part		
Type designation	**Reflective tape 200x200-M**	**Reflective tape 500x500-M**	**Reflective tape 914x914-M**
Part no.	50104364	50104365	50104366
Foil size	200x200mm	500x500mm	914x914mm
Outer dimensions of the metal plate	250x250mm	550x550mm	964x964mm
Weight	0.8kg	4kg	25kg
Cleaning	Do not use any agents that act with a grinding effect. A conventional household detergent can be used as a cleaning agent. Rinse with clear water and dry the surface.		
Storing the reflector	Store in a cool and dry place.		

6.2.3 Dimensioned drawing of reflective tape on a metal plate

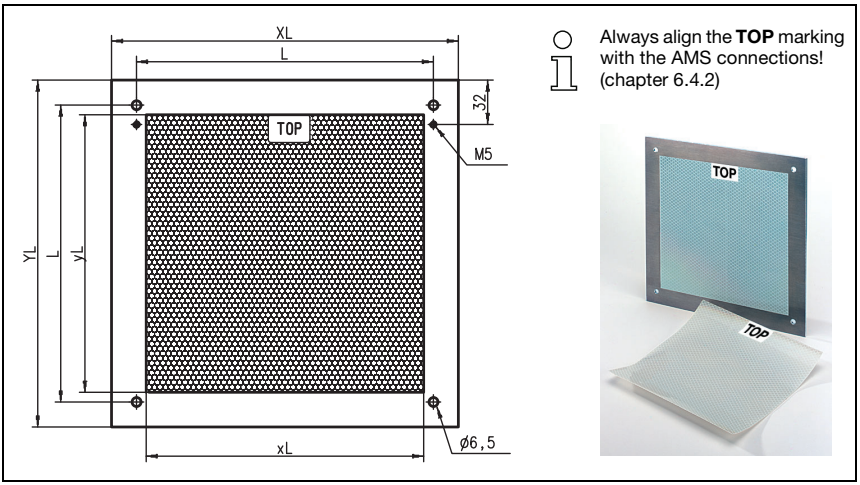

Figure 6.1: Dimensioned drawing of reflectors

Part	Reflective tape (mm)		Reflector plate (mm)		
	xL	yL	XL	YL	L
Reflective tape 200x200-M	200	200	250	250	214
Reflective tape 500x500-M	500	500	550	550	514
Reflective tape 914x914-M	914	914	964	964	928

6.2.4 Specifications of heated reflectors

The reflective tape is affixed to a heated, thermally insulated base. The insulation results in a very high energetic efficiency.

Only the reflective tape is kept at the specified temperature by the integrated heater. Through the insulation on the back, the generated heat cannot be transferred via the steel construction. Energy costs are greatly reduced in the case of continuous heating.

	Part		
Type designation	**Reflective tape 200x200-H**	**Reflective tape 500x500-H**	**Reflective tape 914x914-H**
Part no.	50115020	50115021	50115022
Voltage supply	230VAC		
Power	100W	600W	1800W
Current consumption	~ 0.5A	~ 3A	~ 8A
Length of the supply line	2 m		
Size of the reflective tape	200x200mm	500x500mm	914x914mm
Outer dimensions of the base material	250x250mm	550x550mm	964x964mm
Weight	0.5kg	2.5kg	12kg
Temperature control	Controlled heating with the following switch-on and switch-off temperatures, measured at the reflector surface.		
Switch-on temperature	~ 5°C		
Switch-off temperature	~ 20°C		
Operating temperature	-30°C … +70°C		
Storage temperature	-40°C … +80°C		
Air humidity	Max. 90%, non-condensing.		
Cleaning	Do not use any agents that act with a grinding effect. A conventional household detergent can be used as a cleaning agent. Rinse with clear water and dry the surface.		
Storing the reflector	Store in a cool and dry place.		

6.2.5 Dimensioned drawing of heated reflectors

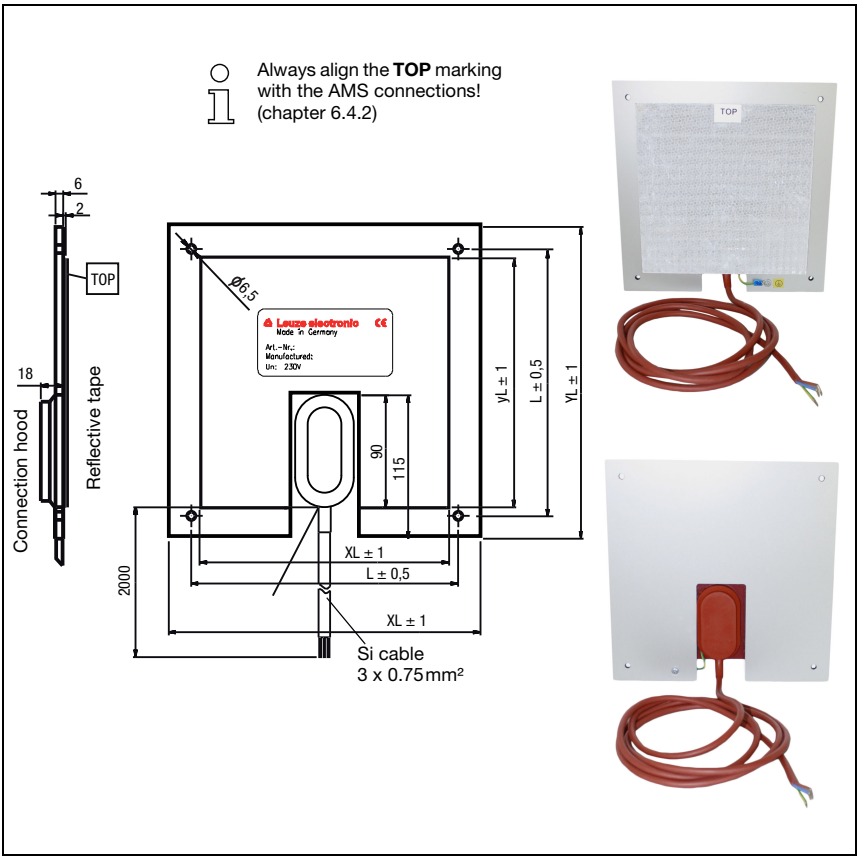

Figure 6.2: Dimensioned drawing of heated reflectors

Part	Reflective tape (mm)		Insulated base plate (mm)		
	xL	yL	XL	YL	L
Reflective tape 200x200-H	200	200	250	250	214
Reflective tape 500x500-H	500	500	550	550	514
Reflective tape 914x914-H	914	914	964	964	928

6.3 Selecting reflector sizes

Depending on system design, the reflector can be mounted so that it travels on the vehicle or it can be mounted at a fixed location.

Attention!

The reflector sizes shown below are a recommendation from Leuze electronic for on-vehicle mounting of the AMS 304i. For stationary mounting of the AMS 304i, a smaller reflector is generally sufficient for all measurement distances.
On the basis of the system planning and design, always check whether mechanical travel tolerances may require the use of a reflector larger than that which is recommended. This applies, in particular, when the laser measurement system is mounted on a vehicle. During travel, the laser beam must reach the reflector without interruption. For on-vehicle mounting of the AMS 304i, the reflector size must accommodate any travel tolerances that may arise and the associated "wandering" of the light spot on the reflector.

Overview of reflector types

Recommended reflector sizes			
AMS 304*i* selection (Operating range in m)	**Recommended reflector size (H x W)**	**Type designation …-S = Self-adhesive …-M = metal plate …-H = heating**	**Part no.**
AMS 304*i* 40 (**max. 40m**)	200x200mm	Reflective tape 200x200-S Reflective tape 200x200-M Reflective tape 200x200-H	50104361 50104364 50115020
AMS 304*i* 120 (**max. 120m**)	500x500mm	Reflective tape 500x500-S Reflective tape 500x500-M Reflective tape 500x500-H	50104362 50104365 50115021
AMS 304*i* 200 (**max. 200m**)	749x914mm 914x914mm	Reflective tape 749x914-S Reflective tape 914x914-M Reflective tape 914x914-S Reflective tape 914x914-H	50104363 50104366 50108988 50115022
AMS 304*i* 300 (**max. 300m**)	749x914mm 914x914mm	Reflective tape 749x914-S Reflective tape 914x914-M Reflective tape 914x914-S Reflective tape 914x914-H	50104363 50104366 50108988 50115022

6.4 Mounting the reflector

6.4.1 General information

Self-adhesive reflective tapes

The reflective tapes of the "Reflective tape …x…**-S**" self-adhesive series must be affixed to a flat, clean and grease-free surface. We recommend using a separate metal plate, which is to be provided on-site.

As described in table 6.1, the reflective tape must be angled.

Reflective tapes on metal

The reflective tapes of the "Reflective tape …x…**-M**" series are provided with corresponding mounting holes. Spacer sleeves are provided in the packet for achieving the necessary pitch angle. For further information see table 6.1.

Heated reflectors

The reflective tapes of the "Reflective tape ...x...**-H**" series are provided with corresponding mounting holes. Due to the voltage supply affixed on the rear, the reflector cannot be mounted flat. Included in the package are four distance sleeves in two different lengths. Use the distance sleeves to achieve a base separation to the wall as well as the necessary pitch for avoiding surface reflection. For further information see table 6.1.

The reflector is provided with a 2m-long connection cable for supplying with 230VAC. Connect the cable to the closest power outlet. Observe the current consumptions listed in the specifications.

Attention!

Connection work must be carried out by a certified electrician.

6.4.2 Mounting the reflector

The combination of laser measurement system and reflective tape/reflector is mounted so that the laser light spot hits the tape as centered as possible and without interruption.

For this purpose, use the alignment elements provided on the AMS 304*i*… (see chapter 5.2 "Mounting the AMS 304i"). If necessary, remove the protective foil from the reflector.

Attention!

The "TOP" label mounted on the reflectors should be aligned the same as the connections of the AMS 304*i*.

Example:

If the AMS 304i is mounted so that the M12 connections are on the top, the "TOP" label of the reflector is also on the top. If the AMS 304i is mounted so that the M12 connections are on the side, the "TOP" label of the reflector is also on the side.

Notice!

The reflector must be angled. To do this, use the spacer sleeves. Angle the reflectors so that the ***surface reflections of the foil seal are deflected to the left, right or upwards****, chapter 6.4.3 gives the correct pitch with respect to the reflector size and, thus, the length of the spacers.*

Reflective tapes …-S and …-M

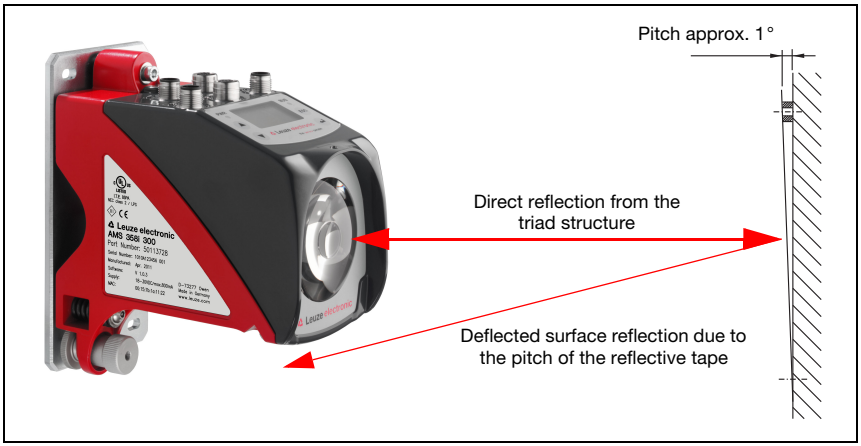

Figure 6.3: Reflector mounting

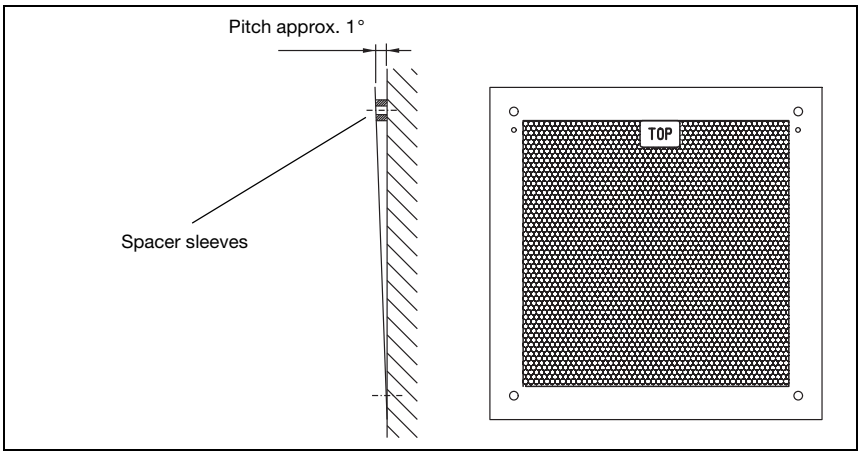

Figure 6.4: Pitch of the reflector

Reflective tapes ...-H

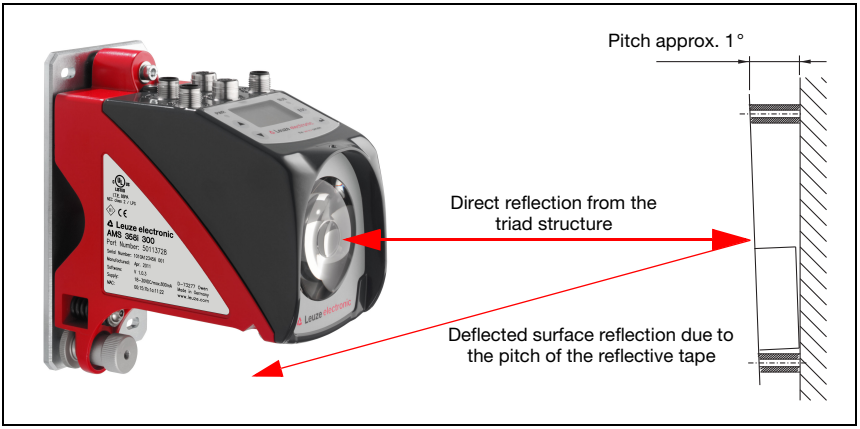

Figure 6.5: Mounting of heated reflectors

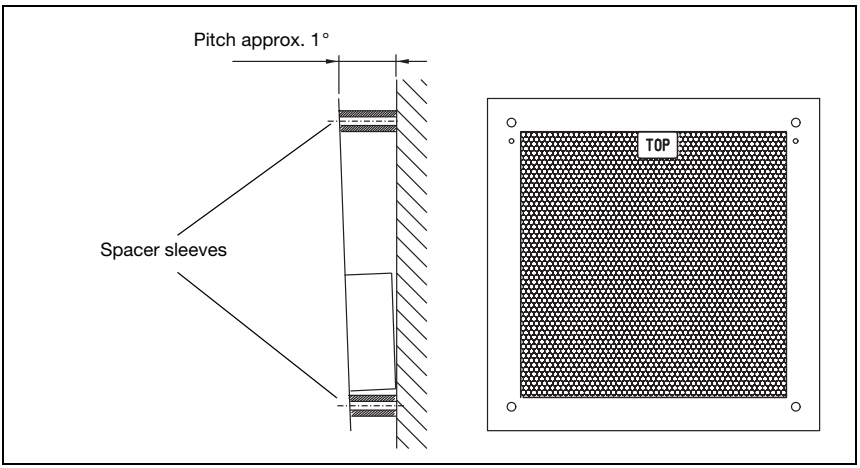

Figure 6.6: Pitch of the heated reflector

6.4.3 Table of reflector pitches

Reflector type	Pitch resulting from spacer sleeves [1]	
Reflective tape 200x200-S Reflective tape 200x200-M	**2 x 5mm**	
Reflective tape 200x200-H	**2 x 15mm**	**2 x 20mm**
Reflective tape 500x500-S Reflective tape 500x500-M	**2 x 10mm**	
Reflective tape 500x500-H	**2 x 15mm**	**2 x 25mm**
Reflective tape 749x914-S	**2 x 20mm**	
Reflective tape 914x914-S Reflective tape 914x914-M	**2 x 20mm**	
Reflective tape 914x914-H	**2 x 15mm**	**2 x 35mm**

1) Spacer sleeves are included in the delivery contents of reflective tape …-**M** and …-**H**

Table 6.1: Reflector pitch resulting from spacer sleeves

Notice!

Reliable function of the AMS 304i and, thus, max. operating range and accuracy can only be achieved with the reflective tape specified by Leuze electronic. No function can be guaranteed if other reflectors are used!

7 Electrical connection

The AMS 304*i* laser measurement systems are connected using variously coded M12 connectors. This ensures unique connection assignments.

Notice!

The corresponding mating connectors and ready-made cables are available as accessories for all cables. For further information, see chapter 12 "Type overview and accessories".

Figure 7.1: Connections of the AMS 304*i*

7.1 Safety notices for the electrical connection

Attention!

Before connecting the device, be sure that the supply voltage agrees with the value printed on the name plate.
The device may only be connected by a qualified electrician.
Ensure that the functional earth (FE) is connected correctly. Unimpaired operation is only guaranteed when the functional earth is connected properly.
If faults cannot be corrected, the device should be removed from operation and protected against possible use.

Attention!

For UL applications, use is permitted exclusively in Class 2 circuits according to NEC (National Electric Code).

The laser measurement systems are designed in accordance with safety class III for supply by PELV (protective extra-low voltage with reliable disconnection).

Notice!

Protection class IP65 is achieved only if the connectors and caps are screwed into place!

Described in detail in the following are the individual connections and pin assignments.

7.2 PWR – voltage supply / switching input/output

PWR (5-pin plug, A-coded)			
PWR 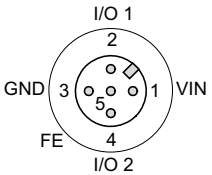 **M12 plug (A-coded)**	**Pin**	**Name**	**Remark**
	1	VIN	Positive supply voltage +18 … +30VDC
	2	I/O 1	Switching input/output 1
	3	GND	Negative supply voltage 0VDC
	4	I/O 2	Switching input/output 2
	5	FE	Functional earth
	Thread	FE	Functional earth (housing)

Table 7.1: Pin assignment PWR

Further information on configuring the input/output can be found in chapter 8 and chapter 9.

7.3 PROFIBUS BUS IN

BUS IN (5-pin plug, B-coded)			
BUS IN 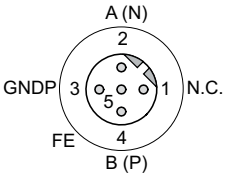 **M12 connector (B-coded)**	**Pin**	**Name**	**Remark**
	1	NC	Not used
	2	A (N)	Receive/transmit data A-line (N)
	3	GNDP	Data reference potential
	4	B (P)	Receive/transmit data B-line (P)
	5	SHIELD	Shield or functional earth
	Thread	FE	Functional earth (housing)

Table 7.2: Pin assignments for BUS IN

7.4 PROFIBUS BUS OUT

BUS OUT (5-pin socket, B-coded)			
BUS OUT 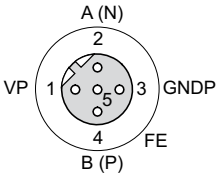 **M12 socket (B-coded)**	**Pin**	**Name**	**Remark**
	1	VP	Supply voltage +5V (termination)
	2	A (N)	Receive/transmit data A-line (N)
	3	GNDP	Data reference potential
	4	B (P)	Receive/transmit data B-line (P)
	5	SHIELD	Shield or functional earth
	Thread	FE	Functional earth (housing)

Table 7.3: Pin assignment BUS OUT

7.5 SSI

SSI (5-pin plug, B-coded)			
SSI 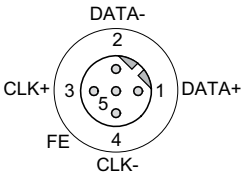 **M12 connector (B-coded)**	**Pin**	**Name**	**Remark**
	1	DATA+	**+** Data line SSI (output)
	2	DATA-	**-** Data line SSI (output)
	3	CLK+	**+** Clock line SSI (input electrically insulated)
	4	CLK-	**-** Clock line SSI (input electrically insulated)
	5	FE	Functional earth
	Thread	FE	Functional earth (housing)

Table 7.4: SSI pin assignment

7.6 Service

Service (5-pin socket, A-coded)			
SERVICE 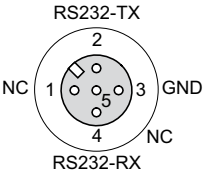 **M12 socket (A-coded)**	**Pin**	**Name**	**Remark**
	1	NC	Not used
	2	RS232-TX	Transmission line RS 232/service data
	3	GND	Voltage supply 0VDC
	4	RS232-RX	Receiving line RS 232/service data
	5	NC	Not used
	Thread	FE	Functional earth (housing)

Table 7.5: Service pin assignments

Notice!

The service interface is designed only for use by Leuze electronic!

8 Display and control panel AMS 304*i*

8.1 Structure of the control panel

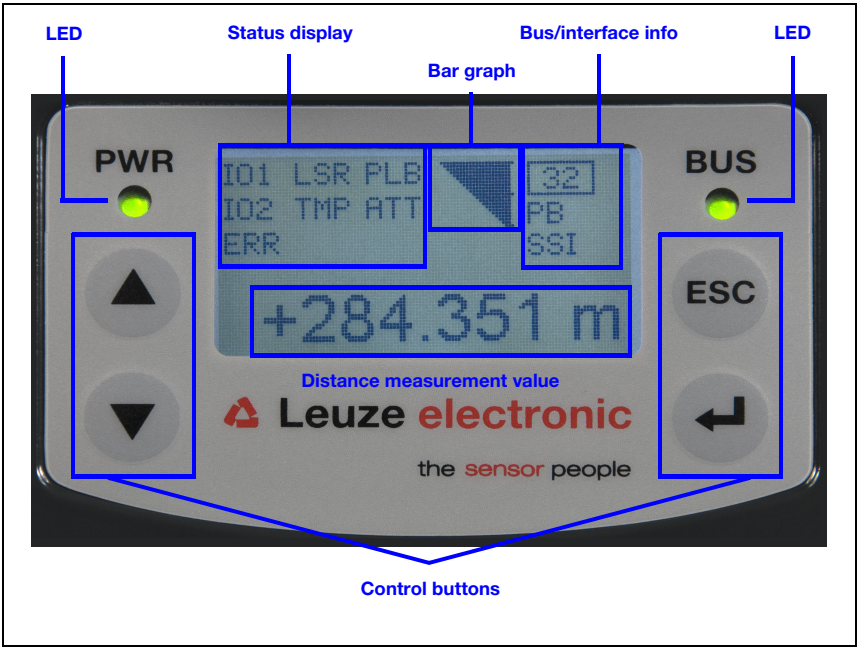

Figure 8.1: Structure of the control panel using the AMS 304*i* PROFIBUS device variant as an example

Notice!

The figure is for illustration purposes only and does not correspond to AMS 304i with respect to bus/interface info.

8.2 Status display and operation

8.2.1 Indicators in the display

Status and warning messages in the display

IO1 **Input 1 or output 1 active:**
Function depending on configuration. See also module 4/5.

IO2 **Input 2 or output 2 active:**
Function depending on configuration. See also module 4/5

LSR **Warning - laser prefailure message:**
Laser diode old, device still functional, exchange or have repaired.

TMP **Warning - temperature monitoring:**
Permissible internal device temperature exceeded / not met.

PLB **Plausibility error:**
Implausible measurement value. Possible causes: light beam interruption, outside of measurement range, permissible internal device temperature considerably exceeded or traverse rate >10m/s.

Depending on the configuration, either zero or the last valid measurement value is output at the interfaces.

ATT **Warning received signal:**
Laser outlet window or reflector soiled or fogged by rain, water vapor or fog. Clean or dry surfaces.

ERR **Internal hardware error:**
The device must be sent in for inspection.

Bar graph

Indicates the **strength of the received laser light**.

The center bar represents the **ATT** warning threshold. The distance value remains valid and is output at the interfaces.

If no bar graph is available, the **PLB** status information appears at the same time.

The measurement value has thus been assessed as being implausible. Depending on the configuration, either zero or the last valid measurement value is output at the interfaces.

Interface info

The bus address set (in figure "126") as well as the "PB" identifier displays an activated PROFIBUS interface. The abbreviation "SSI" stands for an activated SSI interface.

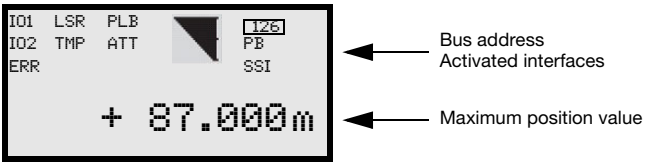

Maximum position value

The measured position value is displayed in the configured unit of measurement.

+87.000m With the **metric** setting, the measurement value is always displayed in meters with **three decimal places**.

+87.0in With the **inch** setting, the measurement value is always displayed in inches with **one decimal place**.

8.2.2 LED status displays

PWR LED

PWR	**Off**	**Device OFF** - No supply voltage
PWR	**Flashing green**	**Power LED flashes green** - No measurement value output - Voltage connected - Self test running - Initialization running - Parameter download running - Boot process running
PWR	**Green continuous light**	**Power LED green** - AMS 304*i* ok - Measurement value output - Self test successfully finished - Device monitoring active
PWR	**Red flashing**	**Power LED flashes red** - Device ok but warning message (ATT, TMP, LSR) set in display - Light beam interruption - Plausibility error (PLB)
PWR	**Red continuous light**	**Power LED red** - No measurement value output; for details, see Display
PWR	**Orange continuous light**	**Power LED orange** - Parameter enable active - No data on the host interface

BUS LED

BUS	**Off**	**BUS LED off** - No supply voltage (Power) - PROFIBUS deactivated? - SSI interface active!

BUS	**Green continuous light**	**BUS LED green** - AMS 304*i* PROFIBUS communication active, bus ok
BUS	**Flashing green**	**BUS LED flashes green** - AMS 304*i* not on the bus
BUS	**Flashing red**	**BUS LED flashes red** - configuration failed ("parameter failure") - DP error - No data exchange
BUS	**Red continuous light**	**BUS LED red** - Bus failure, no DP protocol established to the master ("no data exchange") -

8.2.3 Control buttons

▲	**Up**	Navigate upward/laterally.
▼	**Down**	Navigate downward/laterally.
ESC	**ESC**	Exit menu item.
↵	**ENTER**	Confirm/enter value, change menu levels.

Navigating within the menus

The menus within a level are selected with the up/down buttons ▲ ▼.

The selected menu item is activated with the enter button ↵.

Press the ESC button ESC to move up one menu level.

When one of the buttons is actuated, the display illumination is activated for 10 min.

Setting values

If input of a value is possible, the display looks like this:

```
100
        <-l0123456789  save
    Default ---------------- unit
126          |    |
```

4 + ↵	Delete character
0...9 + ↵	Enter digit
save + ↵	Save

Use the ▲ ▼ and ↵ buttons to set the desired value. An accidental, incorrect entry can be corrected by selecting <-l and then pressing ↵.

Then use the ▲ ▼ buttons to select Save and save the set value by pressing ↵.

Selecting options

If options can be selected, the display looks like this:

```
o OFF
  ON
   Default ---------------- unit
  OFF        |    |
```

Select the desired option with the ▲ ▼ buttons. Activate the option by pressing ↵.

8.3 Menu description

8.3.1 The main menus

After voltage has been applied to the laser, device information is displayed for several seconds. The display then shows the measurement window with all status information.

```
AMS 304i 120
Leuze electronic
          GmbH & Co. KG
SW: V 1.3.0   HW:1
SN: ---------------
```

Device information - main menu

This menu item contains detailed information on

- Device model,
- Manufacturer,
- Software and hardware version,
- Serial number.

No entries can be made via the display.

▲ ▼

```
Network information
Address:       ---
Baud rate:    --- kbit/s
```

Network information - main menu

- Explanations of address and baud rate.

No entries can be made via the display.

▲ ▼

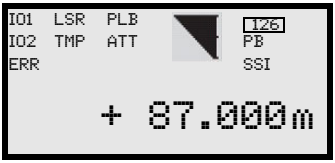

Status and measurement data - main menu

- Display of status-, warning-, and error messages
- Status overview of the switching inputs/outputs.
- Bar graph for the reception level.
- Link.
- Measurement value.

No entries can be made via the display.
See "Indicators in the display" on page 41.

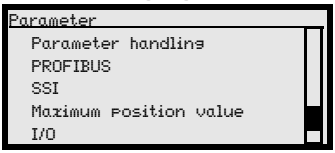

Parameter - main menu

- Configuration of the AMS.

See "Parameter menu" on page 46.

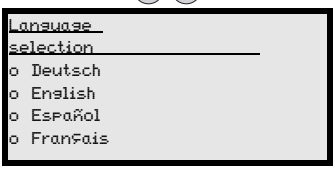

Language selection - main menu

- Selection of the display language.

See "Language selection menu" on page 50.

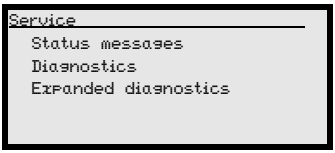

Service - main menu

- Display of status messages.
- Display of diagnostic data.

No entries can be made via the display.
See "Service menu" on page 51.

Notice!

The rear cover *of this manual includes a* ***fold-out page*** *with the complete* ***menu structure****. It describes the menu items in brief.*

8.3.2 Parameter menu

Parameter handling submenu

The following functions can be called up in the Parameter handling submenu:

- Lock and enable parameter entry
- Set up a password
- Reset the AMS 304*i* to default settings.

Table 8.1: Parameter handling submenu

Level 3	Level 4	Level 5	Selection/configuration option Description	Standard
Parameter enabling			ON / OFF The standard setting (OFF) prevents unintended parameter changes. With parameter enabling activated (ON), the display is inverted. In this state, it is possible to change parameters manually.	OFF

Table 8.1: Parameter handling submenu

Level 3	Level 4	Level 5	Selection/configuration option Description	Standard
Password	Activate password		ON / OFF To enter a password, parameter enabling must be activated. If a password is assigned, changes to the AMS 304*i* can only be made after the password is entered. The master password 2301 bridges the individually set password.	OFF
	Password entry		Configuration option of a four-digit numerical password	
Parameters to default			By pressing the enter button ↵ after selecting `Parameters to default`, all parameters are reset to their standard settings without any further security prompts. In this case, English is selected as the display language.	

Additional important information on parameter handling can be found at the end of the chapter.

PROFIBUS submenu

Table 8.2: PROFIBUS submenu

Level 3	Level 4	Level 5	Selection/configuration option Description	Standard
Activation			ON / OFF Activates or deactivates the AMS 304*i* as a PROFIBUS participant.	ON
Address			Value from 0 to 126 The PROFIBUS permits an address range from 0 to 126. Address 126 must not be used for data communication. It may only be used temporarily for commissioning. The default address is 126. The address must be assigned separately for each AMS 304*i*.	126

SSI submenu

Table 8.3: SSI submenu

Level 3	Level 4	Level 5	Selection/configuration option Description	Standard
Activation			ON / OFF Activates or deactivates the AMS 304*i* as an SSI participant.	ON
Coding			Binary/gray Specifies the output format of the measurement value.	Gray
Number of data bits			24-bit/25-bit/26-bit The measurement value can be displayed on the SSI interface in this data width.	24 bit
SSI resolution			0.001 mm / 0.01 mm / 0.1 mm / 1 mm / 10 mm / free resolution The measurement value can be displayed in these resolutions. The value of the free resolution is determined in the "Position value" submenu in the "Value of free resolution" parameter.	0.1 mm

Table 8.3: SSI submenu

Level 3	Level 4	Level 5	Selection/configuration option Description	Standard
Error bit			ON/OFF This parameter determines whether an error bit is also attached to the "number of data bits". The error bit is the LSB and is not converted in the case of gray representation of the measurement value.	ON
Error bit function			The error bit can be set with the following status messages: Overflow / intensity (ATT) / temperature (TMP) /laser (LSR) / plausibility (PLB) / hardware (ERR) In the case of multiple namings, the individual states in the error bit are processed in an OR function.	Plausibility (PLB) Hardware (ERR)
Update rate			1.7 / 0.2 ms	1,7
Clock frequency			50 - 79 kHz / 80 - 800 kHz Selection of the clock frequency.	80 - 800 kHz

Position value submenu

Table 8.4: Position value submenu

Level 3	Level 4	Level 5	Selection/configuration option Description	Standard
Measurement unit			Metric/Inch Specifies the units of the measured distances	Metric
Count direction			Positive/Negative Positive: The measurement value begins at 0 and increases with increasing distance. Negative: The measurement value begins at 0 and decreases with increasing distance. Negative distance values may need to be compensated with an offset or preset.	Positive
Offset			Output value=measurement value+offset. The resolution of the offset value is independent of the selected "Resolution position" and is entered in mm or inch/100. The offset value is effective immediately following entry. If the preset value is activated, this has priority over the offset. Preset and offset are not offset against each other.	0 mm
Preset			The preset value is accepted by means of teach pulse. The teach pulse can be applied to a hardware input of the M12 PWR connector. The hardware input must be appropriately configured. See also configuration of the I/Os.	0 mm
Free resolution value			The measurement value can be resolved in increments of 1/1000 within the 5 … 50000 value range. If, e.g., a resolution of 0.875 mm per digit is required, the parameter is set to 875. In the activated interface, the measurement value display must also be set to "free resolution" ("SSI resolution" parameter).	1000
Error delay			ON / OFF Specifies whether, in the event of an error, the position value immediately outputs the value of the "Position value in the case of error" parameter or the last valid position value for the configured error delay time.	ON/100 ms
Position value in the case of error			Last valid value / zero Specifies which position value is output after the error delay time elapses.	Zero

I/O submenu

Table 8.5: I/O submenu

Level 3	Level 4	Level 5	Selection/configuration option Description	Standard
I/O 1	Port configuration		Input/Output Defines whether I/O 1 functions as an output or input.	Output
	Switching input	Function	No function/preset teach/laser ON/OFF	No function
		Activation	Low active/High active	Low active
	Switching output	Function	Pos. limit value 1 / Pos. limit value 2 / Velocity / Intensity (ATT) / Temp. (TMP) / Laser (LSR) / Plausibility (PLB) / Hardware (ERR) The individual functions are "ORed" on the selected switching output.	Plausibility (PLB), hardware (ERR)
		Activation	Low active/High active	Low active
I/O 2	Port configuration		Input/Output Defines whether I/O 2 functions as an output or input.	Output
	Switching input	Function	No function/preset teach/laser ON/OFF	No function
		Activation	Low active/High active	Low active
	Switching output	Function	Pos. limit value 1 / Pos. limit value 2 / Velocity / Intensity (ATT) / Temp. (TMP) / Laser (LSR) / Plausibility (PLB) / Hardware (ERR) The individual functions are "ORed" on the selected switching output.	Intensity (ATT), Temp. (TMP), Laser (LSR)
		Activation	Low active/High active	Low active
Limit values	Upper pos. limit 1	Activation	ON / OFF	OFF
		Limit value input	Value input in mm or inch/100	0
	Lower pos. limit 1	Activation	ON / OFF	OFF
		Limit value input	Value input in mm or inch/100	0
	Upper pos. limit 2	Activation	ON / OFF	OFF
		Limit value input	Value input in mm or inch/100	0
	Lower pos. limit 2	Activation	ON / OFF	OFF
		Limit value input	Value input in mm or inch/100	0
	Max. velocity	Activation	ON / OFF	OFF
		Max. velocity	Value input in mm/s or inch/100s	0

Other submenu

Table 8.6: Other submenu

Level 3	Level 4	Level 5	Selection/configuration option Description	Standard
Heating control			Standard (10° C … 15° C)/Extended (30° C … 35°) Defines a switch-on/switch-off range for the heating control. The extended switch-on/switch-off range for heating may provide relief in the event of condensation problems. There is no guarantee that no condensation will occur on the optics in the extended switch-on/switch-off range due to the limited heating capacity. This parameter is available as standard, but functions only for devices with integrated heating (AMS 304*i*… **H**).	Standard
Display illumination			10 minutes/ON Display illumination is switched off after 10 minutes or, if the parameter is set to "ON", illumination is always on.	10 min.
Display contrast			Weak/Medium/Strong The display contrast may change at extreme temperature values. The contrast can subsequently be adapted using the three levels.	Medium
Service RS232	Baud rate		57.6 kbit/s / 115.2 kbit/s The service interface is only available to Leuze internally.	115.2 kbit/s
	Format		8,e,1 / 8,n,1 The service interface is only available to Leuze internally.	8,n,1

8.3.3 Language selection menu

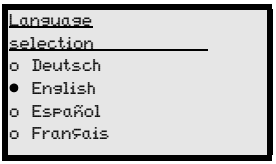

There are 5 display languages available:

- German
- English
- Spanish
- French
- Italian

The AMS 304*i* is delivered from the factory with the display preset to English.

Notice!

When operating the AMS 304i on the PROFIBUS, the language configured in the GSD file is used in the display.

To change the language, no password needs to be entered nor must password enabling be activated. The display language is a passive operational control and is, thus, not a function parameter, per se.

8.3.4 Service menu

```
Service
 Status messages
 Diagnostics
 Expanded diagnostics
```

A more detailed description of the individual functions can be found in chapter 11.

8.4 Operation

Described here is an operating process using parameter enabling as an example.

Parameter enabling

During normal operation parameters can only be viewed. If parameters are to be changed, the ON menu item in the Parameter -> Parameter handling -> Parameter enable menu must be activated. To do this, proceed as follows:

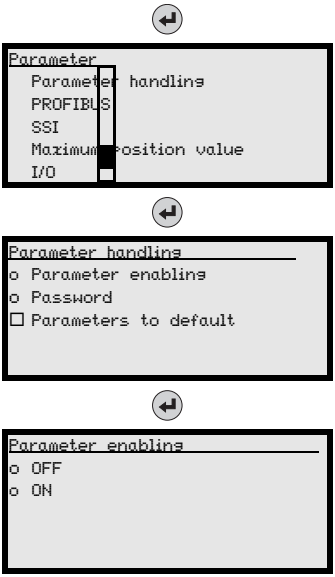

In the main menu, press the enter button to enter the Parameter menu.

Use the ▲ ▼ buttons to select the Parameter handling menu item.

Press the enter button to enter the Parameter handling menu.

In the Parameter handling menu, use the ▲ ▼ buttons to select the Parameter enabling menu item.

Press the enter button to enter the Parameter enabling menu.

In the Parameter enabling menu, use the ▲ ▼ buttons to select the ON menu item.

Press the enter button to switch on parameter enabling.

The PWR LED illuminates orange; the display is inverted. You can now set the individual parameters on the display.

Press the ESC button twice to return to the Parameter menu.

Viewing and editing parameters

As long as parameter enabling is activated, the entire AMS 304*i* display is inverted.

As long as parameter enabling is activated, communication between control and AMS 304*i* is interrupted. The continued networking via BUS OUT is retained.

Notice!

If a password was stored, parameter enabling is not possible until this password is entered, see "Password for parameter enabling" below.

Notice!

Parameters which are defined in a GSD file have priority. After deactivation of parameter enabling on the AMS 304i, the parameter defined in the control are reactivated. The address setting is not overwritten.

For the SSI interface, the communication between the control and the AMS 304*i* is also active the case of parameter enabling.

Notice!

Changes to the SSI parameters via display entry have immediate effect.

Password for parameter enabling

Parameter entry on the AMS 304*i* can be protected with a password. With the AMS 304*i*, the password is determined via the PROFIBUS GSD file. Thus, the password cannot be changed by means of display entry.

To activate parameter enabling via the display (e.g., for changing an address), the password defined in the GSD file must be entered. If parameter enabling has been activated after successfully entering the password, parameters can temporarily be changed via the display.

After parameter enabling is deactivated, all changes made on the display are overwritten by the GSD file. Even a possibly newly assigned password. Only a changed address remains unchanged after entry via the display.

Notice!

*The **master password 2301** can enable the AMS 304i at any time.*

9 PROFIBUS interface

9.1 General information on PROFIBUS

The AMS 304*i* is designed as a PROFIBUS DP device for cyclical (V0) as well as acyclic (V1) data exchange.

For this purpose the functionality of the laser is defined via GSD parameter sets. The max. baud rate of the data to be transferred is 12 Mbit/s.

The PROFIBUS interface can be used parallel to the SSI interface. PROFIBUS and SSI interfaces are activated by default.

Notice!

The PROFIBUS interface can be activated/deactivated via the display. To activate / deactivate the interface, parameter enabling must be activated (see chapter 8.3.2). The respectively active interface is shown in the display; when PROFIBUS is activated, the address set is visible in the display.

9.2 PROFIBUS electrical connection

BUS IN (5-pin plug, B-coded)		
Pin	**Name**	**Remark**
1	**NC**	Not used
2	**A (N)**	Receive/transmit data A-line (N)
3	**GNDP**	Data reference potential
4	**B (P)**	Receive/transmit data B-line (P)
5	**SHIELD**	Shield or functional earth
Thread	**FE**	Functional earth (housing)

BUS OUT (5-pin socket, B-coded)		
Pin	**Name**	**Remark**
1	**VP**	Supply voltage +5V (termination)
2	**A (N)**	Receive/transmit data A-line (N)
3	**GNDP**	Data reference potential
4	**B (P)**	Receive/transmit data B-line (P)
5	**SHIELD**	Shield or functional earth
Thread	**FE**	Functional earth (housing)

Figure 9.1: PROFIBUS - Electrical connection

Notice!

*For contacting **BUS IN** and **BUS OUT**, we recommend our ready-made PROFIBUS cable (see chapter 12.4.6 "Accessory ready-made cables for PROFIBUS").*

Attention!

*The laser measurement system can be used to branch out the PROFIBUS network. The **continuing network** is connected via **BUS OUT**.*

*If the laser measurement system is the last subscriber in the network, the **BUS OUT** connection must be connected to a terminator plug, see "Accessory terminating resistor" on page 106..*

9.3 PROFIBUS address entry

Notice!

Basic operation of the control panel/display is described in chapter 8.2. To set the address parameter enabling must be activated. The display is inverted.

Attention!

The laser measurement system is deactivated on the PROFIBUS when parameter enabling is activated via the display. The device is reactivated on the PROFIBUS after parameter enabling is exited.

9.3.1 Entering the PROFIBUS addresses via the display

To do this proceed as follows:

- *Activate parameter enabling.*
- *Select the PROFIBUS submenu.*
- *Select the address menu item [ ].*
- *Enter the PROFIBUS address of the laser measurement system; set to a value between 1 and 126 (default: 126).*
- *Deactivate parameter enabling.*

9.4 PROFIBUS GSD file

9.4.1 General information on the GSD file

If the AMS 304*i* is operated in a PROFIBUS network, configuration must be performed exclusively via the PROFIBUS. The functionality of the laser measurement system is defined via modules. The parameters and their functions are structured in the GSD file using module. A user-specific configuration tool is used during PLC program creation to integrate the required modules and configure them appropriately for the measurement application.

During operation of the laser measurement system on the PROFIBUS all parameters are set to default values. If these parameters are not changed by the user, the device functions using the default settings supplied by Leuze electronic. For the default settings of the device please refer to the following module descriptions.

Notice!

*At least one module in the GSD file must be activated in the configuration tool for the control, usually the **Position value module**.*

Notice!

Some controls make available a so-called "universal module". This module must not be activated for the AMS 304i.

Attention!

The AMS 304i makes available a PROFIBUS and an SSI interface. Both interfaces can be operated in parallel. If the AMS 304i is operated via the PROFIBUS, the SSI parameters must also be changed via the PROFIBUS SSI module if they differ from the default settings.

SSI parameters which are only changed via the display are overwritten by the PROFIBUS manager with the SSI (default) values stored in the GSD file.

Notice!

For test purposes parameters can be changed via the display on a laser measurement system operated on the PROFIBUS. As soon as parameter enabling is activated on the display, the device is deactivated on the PROFIBUS. All parameters set via PROFIBUS modules remain effective. Parameter changes can now be made via the display for test purposes. If parameter enabling is deactivated via the display, only the parameters set in the PROFIBUS modules and the PROFIBUS default settings are in effect.
Parameter changes made via the display are no longer in effect on the PROFIBUS!

Attention!

The laser measurement system does not permanently store parameters changed via the PROFIBUS. Following Power OFF/ON the currently configured parameters are downloaded by the PROFIBUS manager. If no PROFIBUS manager is available following Power OFF/ON, the parameters set on the display apply.

Notice!

All input and output modules described in this documentation are described ***from the controller's perspective***:

Described inputs (I) are inputs of the control.
Described outputs (O) are outputs of the control.
Described parameters (P) are parameters of the GSD file in the control.

Notice!

The current GSD file for the AMS 304i can be found on our homepage under ***www.leuze.com***

9.4.2 Overview of the GSD modules

Module	Module name	Module contents (P) = Parameter, (O) = Output, (I) = Input
M1 page 60	**Position value**	(I) Position value
		(P) Sign
		(P) Unit
		(P) Resolution
		(P) Count direction
		(P) Offset
M2 page 62	**Static preset**	(P) Preset value
		(O) Preset teach
		(O) Preset reset
M3 page 63	**Dynamic preset**	(O) Preset value
		(O) Preset teach
		(O) Preset reset
M4 page 64	**I/O 1**	(P) Output or input defined
		(P) Level/edge input/output
		(P) Function for output wiring
		(P) Function for input wiring
		(I) Signal level input/output
		(O) Output activated
M5 page 67	**I/O 2**	(P) Output or input defined
		(P) Level/edge input/output
		(P) Function for output wiring
		(P) Function for input wiring
		(I) Signal level input/output
		(O) Output activated
M6 page 70	**Status and control**	(I) Diagnosis and status of AMS 304*i*
		(O) Laser control ON/OFF
M7 page 72	**Position limit value 1**	(P) Upper and lower position limit value
M8 page 73	**Position limit value 2**	(P) Upper and lower position limit value
M9 page 74	**Error handling procedures**	(P) Position value in case of error
		(P) Position error message delay ON/OFF
		(P) Position error message delay
		(P) Velocity value in case of error
		(P) Velocity error message delay ON/OFF
		(P) Velocity error message delay
M10 page 76	**Velocity**	(I) Velocity value
		(P) Velocity value resolution
		(P) Velocity integration time

M11 page 78	**Velocity limit value 1**	(P) Monitoring for over/under values
		(P) Monitoring direction dependent yes/no
		(P) Velocity limit value 1
		(P) Hysteresis of velocity limit value
		(P) Start of velocity monitoring range
		(P) End of velocity monitoring range
M12 page 80	**Velocity limit value 2**	(P) Monitoring for over/under values
		(P) Monitoring direction dependent yes/no
		(P) Velocity limit value 2
		(P) Hysteresis of velocity limit value
		(P) Start of velocity monitoring range
		(P) End of velocity monitoring range
M13 page 82	**Velocity limit value 3**	(P) Monitoring for over/under values
		(P) Monitoring direction dependent yes/no
		(P) Velocity limit value 3
		(P) Hysteresis of velocity limit value
		(P) Start of velocity monitoring range
		(P) End of velocity monitoring range
M14 page 84	**Velocity limit value 4**	(P) Monitoring for over/under values
		(P) Monitoring direction dependent yes/no
		(P) Velocity limit value 4
		(P) Hysteresis of velocity limit value
		(P) Start of velocity monitoring range
		(P) End of velocity monitoring range
M15 page 86	**Velocity Limit value Dynamic**	(O) Release/lock limit value control
		(P) Monitoring for over/under values
		(P) Monitoring direction dependent yes/no
		(O) Dynamic velocity limit value
		(O) Hysteresis of velocity limit value
		(O) Start of velocity monitoring range
		(O) End of velocity monitoring range
M16 page 87	**Velocity status**	(I) Status of velocity monitoring
M17 page 89	**SSI interface**	(P) Gray/Binary coding
		(P) Number of data bits
		(P) Resolution
		(P) Update rate
		(P) Function of the error bit
M18 page 92	**Other**	(P) Display language selection
		(P) Display illumination
		(P) Display contrast
		(P) Activate/inhibit password
		(P) Password
		(P) Heating control
M19	**–**	–
M20 page 94	**Free resolution**	(P) Position resolution
		(P) Velocity resolution

Table 9.1: Overview of the GSD modules

9.4.3 Detail description of the modules

Note!

In the following detailed descriptions of the modules you will find in the last column of the tables ***cross references (CR) to parameters and input/output data of other modules*** *which are directly related to the described parameter.* These cross references must absolutely be observed during configuration.

The individual ***modules*** *are numbered from* ***1 … 20****.*
The ***parameters and input/output data*** *within a module are from* a *…* z*.*

Example:

The a **preset** parameter in module 2 becomes active only when the preset teach occurs via module 2 b, 4 d or 5 d.

9.4.3.2 Module 1: Position value

Description

Outputs the current position value.

The parameters for sign, unit, resolution, count direction and offset remain adjustable.

Parameters

Parameter	Description	Rel. addr.	Data type	Value range	Default	Unit		CR to module
						metr.	Inch	
a **Sign**	Output mode of the sign. Sign affects position and velocity output.	0.0	Bit	**0: two's complement** 1: sign + quantity	**0**	–		–
b **Measure-ment unit**	Selection of the measurement unit [1]. The parameter applies to all values with measurement units. The parameter applies to all interfaces.	0.1	Bit	**0: metric** 1: inch (in)	**0**	–		–
c **Resolution**	Resolution of the position value applies only to the PROFIBUS output. The resolution does not apply to: - Static preset - Dynamic preset - Offset The SSI interface has a separate parameter for the resolution.	0.2 … 0.4	Bit	001=1: 0.001 010=2: 0.01 011=3: 0.1 **100=4: 1** 101=5: 10 110= free resolution	**4**	mm	in/100	19a
d **Count direction**	Count direction positive: 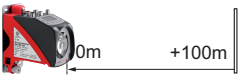 Counting direction negative: The parameter applies to all interfaces. The count direction changes the sign during velocity measurement. For the SSI interface, no negative position values can be transferred. In this case, the value 0 is output at the SSI interface. A suitable offset is to be selected so that only positive values are transferred.	0.5	Bit	**0: positive** 1: negative	**0**	–		–
e **Offset**	Output value=measurement value+offset. The parameter applies to all interfaces. **Attention**: If the preset is activated, it has priority over the offset. Preset and offset are not offset against each other. The resolution of the offset value is independent of the resolution selected in module 1. The entered offset applies immediately without any further release.	1 - 4	sign 32 bit	-999999 … +999999	**0**	mm	in/100	–
Parameter length: 6 bytes								

1) see following notice!

Notice!

*If the **unit of measurement is changed from metric to inch** (or vice versa), **previously entered numerical values** (e.g. for offset, preset, limit values etc.) **are not automatically converted**. This must be performed manually!*

Example:
Preset = 10000mm -> Change from metric to inch -> Preset = 10000 inch/100

Hex coding of the "position value" parameter

The value listed in this table shows the hex coding of the default settings:

Module address	Sign Unit Resolution Count direction	Offset
01	10	00 00 00 00

Input data

Input data	Description	Rel. addr.	Data type	Value	Default	Unit		CR to module
						metr.	Inch	
f Position value	Output of the current position.	0	sign 32 bit	-999999 … +999999	–	scaled		9a
Input data length: 4 bytes consistently								

Output data

no

9.4.3.3 Module 2: Static preset

Description

With this module, a preset value can be specified. The specified preset value becomes active in the position in which preset teaching is performed.

Notice!

In the event of a device change the preset value is retained in the PROFIBUS manager. The activation of the preset value (preset teach) at the intended position must, however, be performed again.

Parameters

Parameter	Description	Rel. addr.	Data type	Value	Default	Unit		CR to module
						metr.	Inch	
a **Preset**	Preset value. The value is accepted during a corresponding teach event (see output data). The parameter applies to all interfaces. The resolution of the preset value is independent of the resolution selected in module 1.	0	sign 32 bit	-999999 … +999999	**0**	mm	in/100	2b 4d 5d
Parameter length: 4 bytes								

Hex coding of the "preset value" parameter

The value listed in this table shows the hex coding of the default settings:

Module address	Preset value
02	00 00 00 00

Input data

no

Output data

Output data	Description	Rel. addr.	Data type	Value	Default	Unit		CR to module
						metr.	Inch	
b **Preset teach**	Read in the preset value.	0.0	Bit	0→1 Preset teach	–	–		4d 5d
c **Preset reset**	Preset value is deactivated.	0.1	Bit	0→1 Preset teach	–	–		4d 5d
Output data length: 1 byte								

9.4.3.4 Module 3: Dynamic preset

Description

With this module, a preset value can be specified. The specified preset value becomes active in the position in which preset teaching is performed. The preset value can be adjusted within the control to meet plant requirements without intervening in the static parameter structure.

Parameters

no

Input data

no

Output data

Output data	Description	Rel. addr.	Data type	Value	Default	Unit		CR to module
						metr.	Inch	
a **Preset teach**	Read in the preset value.	0.0	Bit	0→1 Preset teach	–	–		4d 5d
b **Preset reset**	Preset value is deactivated. Output value=measurement value+offset.	0.1	Bit	0→1 Preset teach	–	–		4d 5d
c **Preset**	The value is accepted during a corresponding teach event, The output data apply to all interfaces. The resolution of the preset value is independent of the resolution selected in module 1.	1	sign 32 bit	-999999 … +999999	–	mm	in/100	3a 4d 5d
Output data length: 5 bytes								

9.4.3.5 Module 4: I/O 1 Input/Output

Description

The module defines the mode of operation of the digital input/output **I/O 1**.

Parameters

Parameter	Description	Rel. addr.	Data type	Value	Default	Unit metr.	Unit Inch	CR to module
a **Function**	The parameter defines whether **I/O 1** functions as an input or as an output.	0.0	Bit	0: Input **1: Output**	**1**	–		4cd
b **Activation**	The parameter defines the level of the output when the "output" event is received. If **I/O 1** is configured as an input, the response is edge-controlled.	0.1	Bit	**0: Low** **1-0 transition** 1: High 0-1 transition	**0**	–		–
c **Output**	The parameter defines which event triggers activation of the output. The individual functions are **OR**-linked to one another.					–		4a
	Position limit value 1 If the position value lies outside of configured limit range 1, the output is set.	1.0	Bit	**0 = OFF** 1 = ON	**0**	–		
	Position limit value 2 If the position value lies outside of configured limit range 2, the output is set.	1.1	Bit	**0 = OFF** 1 = ON	**0**	–		
	Velocity limit value If the velocity value lies outside of the configured values, the output is set. Monitoring from modules 11 to 15 is OR-linked.	1.2	Bit	**0 = OFF** 1 = ON	**0**	–		
	Intensity (ATT) If the intensity of the received signal is less than the warning threshold, the output is set.	1.3	Bit	**0 = OFF** 1 = ON	**0**	–		
	Temperature (TMP) If the internal device temperature exceeds the set limit value, the output is set.	1.4	Bit	**0 = OFF** 1 = ON	**0**	–		
	Laser (LSR) Laser prefailure message.	1.5	Bit	**0 = OFF** 1 = ON	**0**	–		
	Plausibility (PLB) If implausible measurement values are diagnosed, the output is set.	1.6	Bit	0 = OFF **1 = ON**	**1**	–		
c **Output**	**Hardware (ERR)** If a hardware error is diagnosed, the output is set.	1.7	Bit	0 = OFF **1 = ON**	**1**	–		4a
	Pseudodynamic output If bit 0.0 is set in the output data, the output is set.	2.0	Bit	**0 = OFF** 1 = ON	**0**	–		
d **Input**	**Preset** The HW input is used as preset teach input (valid for static or dynamic preset). **Laser** The HW input is used as laser OFF.	3.0 … 3.2	unsign 8 bit	**000 = HW input no function** 001 = HW input as preset teach function 010 = HW input as laser OFF function	**000**	–		4a
Parameter length: 4 bytes								

Hex coding of the "I/O 1 input/output" parameter

The value listed in this table shows the hex coding of the default settings:

Module address	Function Activation	Position limit value 1 Position limit value 2 Velocity limit value Intensity (ATT) Temperature (TMP) Laser (LSR) Plausibility (PLB) Hardware (ERR) Pseudodynamic output	Input Preset / Laser
04	01	00 C0	00

Notice!

Behavior of the AMS 304i on Laser ON/OFF:

If the laser light spot is positioned on the reflector when the laser diode is switched on, the AMS 304i returns valid measurement values after approx. 330ms.

*If the laser light spot is **not** positioned on the reflector when the laser diode is switched on, the AMS 304i cannot calculate any distance values. If the laser beam hits the reflector at a later point in time while switched-on, the AMS 304i 200 returns valid measurement values after the following time span:*

t = (measurement distance / 20m) sec.

Example: *Corridor change of a high-bay storage device during which the laser diode is not switched off while travelling around curves.*
Measurement distance 100m –> t = 5sec., measurement distance 200m –> t = 10sec.

Input data

Input data	Description	Rel. addr.	Data type	Value	Default	Unit		CR to module
						metr.	Inch	
e **State**	Signal state of the input or output.	0.0	Bit	0: Input/Output at signal level **not active** 1: Input/Output at signal level **active**	–	–		–
Input data length: 1 byte								

Output data

Output data	Description	Rel. addr.	Data type	Value	Default	Unit		CR to module
						metr.	Inch	
f **State**	The output can be activated/deactivated with this bit. The corresponding release is performed in module 4, output parameter bit 2.0.	0.0	Bit	0: Output at signal level **not active** 1: Output at signal level **active**	–	–		4c
Output data length: 1 byte								

9.4.3.6 Module 5: I/O 2 Input/Output

Description

The module defines the mode of operation of the digital input/output **I/O 2**.

Parameters

Parameter	Description	Rel. addr.	Data type	Value	Default	Unit metr.	Unit Inch	CR to module
a **Function**	The parameter defines whether **I/O 2** functions as an input or as an output.	0.0	Bit	0: Input **1: Output**	**1**	–		5cd
b **Activation**	The parameter defines the level of the output when the "output" event is received. If **I/O 2** is configured as an input, the response is edge-controlled.	0.1	Bit	**0: Low** **1-0 transition** 1: High 0-1 transition	**0**	–		–
c **Output**	The parameter defines which event triggers activation of the output. The individual functions are **OR**-linked to one another.					–		5a
	Position limit value 1 If the position value lies outside of configured limit range 1, the output is set.	1.0	Bit	**0 = OFF** 1 = ON	**0**	–		
	Position limit value 2 If the position value lies outside of configured limit range 2, the output is set.	1.1	Bit	**0 = OFF** 1 = ON	**0**	–		
	Velocity limit value If the velocity value lies outside of the configured values, the output is set. Monitoring from modules 11 to 15 is OR-linked.	1.2	Bit	**0 = OFF** 1 = ON	**0**	–		
	Intensity (ATT) If the intensity of the received signal is less than the warning threshold, the output is set.	1.3	Bit	0 = OFF **1 = ON**	**1**	–		
	Temperature (TMP) If the internal device temperature exceeds the set limit value, the output is set.	1.4	Bit	0 = OFF **1 = ON**	**1**	–		
	Laser (LSR) Laser prefailure message.	1.5	Bit	0 = OFF **1 = ON**	**1**	–		
	Plausibility (PLB) If implausible measurement values are diagnosed, the output is set.	1.6	Bit	**0 = OFF** 1 = ON	**0**	–		
c **Output**	**Hardware (ERR)** If a hardware error is diagnosed, the output is set.	1.7	Bit	**0 = OFF** 1 = ON	**0**	–		5a
	Pseudodynamic output If bit 0.0 is set in the output data, the output is set.	2.1	Bit	**0 = OFF** 1 = ON	**0**	–		
d **Input**	**Preset** The HW input is used as preset teach input (valid for static or dynamic preset). **Laser** The HW input is used as laser OFF.	3.0 … 3.2	unsign 8 bit	**000 = HW input no function** 001 = HW input as preset teach function 010 = HW input as laser OFF function	**000**	–		5a
Parameter length: 4 bytes								

Hex coding of the "I/O 2 input/output" parameter

The value listed in this table shows the hex coding of the default settings:

Module address	Function Activation	Position limit value 1 Position limit value 2 Velocity limit value Intensity (ATT) Temperature (TMP) Laser (LSR) Plausibility (PLB) Hardware (ERR) Pseudodynamic output	Input Preset / Laser
05	01	00 38	00

Notice!

Behavior of the AMS 304i on Laser ON/OFF:

If the laser light spot is positioned on the reflector when the laser diode is switched on, the AMS 304i returns valid measurement values after approx. 330ms.

*If the laser light spot is **not** positioned on the reflector when the laser diode is switched on, the AMS 304i cannot calculate any distance values. If the laser beam hits the reflector at a later point in time while switched-on, the AMS 304i returns valid measurement values after the following time span:*

t = (measurement distance / 20m) sec.

Example: *Corridor change of a high-bay storage device during which the laser diode is not switched off while travelling around curves.*
Measurement distance 100m –> t = 5sec., measurement distance 200m –> t = 10sec.

Input data

Input data	Description	Rel. addr.	Data type	Value	Default	Unit		CR to module
						metr.	Inch	
e **State**	Signal state of the input or output.	0.0	Bit	0: Input/Output at signal level **not active** 1: Input/Output at signal level **active**	–	–		–
Input data length: 1 byte								

Output data

Output data	Description	Rel. addr.	Data type	Value	Default	Unit		CR to module
						metr.	Inch	
f **State**	The output can be activated/deactivated with this bit. The corresponding release is performed in module 5, output parameter bit 2.1.	0.0	Bit	0: Output at signal level **not active** 1: Output at signal level **active**	–	–		5c
Output data length: 1 byte								

9.4.3.7 Module 6: Status and control

Description

The module supplies various AMS 304*i* status information to the PROFIBUS master. The laser can be controlled via the master's output data.

Parameters

no

Input data

Input data	Description	Rel. addr.	Data type	Value	Default	Unit		CR to module
						metr.	Inch	
a **Laser status**	Signals the laser status.	1.0	Bit	0: Laser ON 1: Laser OFF	–	–		–
b **Preset status**	Status of the preset value.	1.1	Bit	0: Preset not active 1: Preset active	–	–		–
c **Preset teach**	This bit toggles on each teach event of a preset value.	1.2	Bit	0 or 1	–	–		–
d **Overflow**	The output value has exceeded the maximum value which can be represented by the SSI interface. In the event of an overflow the SSI interface data are set to 0xFF.	1.3	Bit	0: OK 1: Overflow	–	–		–
e **Intensity (ATT)**	If the intensity of the received signal is less than the warning threshold, the status bit is set.	1.4	Bit	0: OK 1: Warning	–	–		–
f **Temperature (TMP)**	If the internal device temperature exceeds or drops below the set limit value, the status bit is set.	1.5	Bit	0: OK 1: Temperature above/below limit	–	–		–
g **Laser (LSR)**	Laser prefailure message.	1.6	Bit	0: OK 1: Laser warning	–	–		–
h **Plausibility (PLB)**	If implausible measurement values are diagnosed, the status bit is set.	1.7	Bit	0: OK 1: Implausible measurement value	–	–		–
i **Hardware (ERR)**	If a hardware error is diagnosed, the status bit is set.	0.0	Bit	0: OK 1: Hardware error	–	–		–
j **Lower position limit value 1**	Signals that the value is less than lower limit value 1.	0.4	Bit	0: OK 1: Value less than limit	–	–		–
k **Upper position limit value 1**	Signals that the value is greater than upper limit value 1.	0.5	Bit	0: OK 1: Value greater than limit	–	–		–

l **Lower position limit value 2**	Signals that the value is less than lower limit value 2.	0.6	Bit	0: OK 1: Value less than limit	–	–	–
m **Upper position limit value 2**	Signals that the value is greater than upper limit value 2.	0.7	Bit	0: OK 1: Value greater than limit	–	–	–
Input data length: 2 bytes							

Output data

Output data	Description	Rel. addr.	Data type	Value	Default	Unit		CR to module
						metr.	Inch	
n **Laser**	Controls the laser.	0.0	Bit	0: Laser ON 1: Laser OFF	–	–		–
Output data length: 2 bytes								

9.4.3.8 Module 7: Position limit value range 1

Description

The position limit value range 1 parameter defines a distance range with lower and upper limits. If the measured value lies outside of the configured range, the corresponding bit is set in module 6 or, if configured, an output is set.

Parameters

Parameter	Description	Rel. addr.	Data type	Value	Default	Unit		CR to module
						metr.	Inch	
a **Lower pos. limit 1**	Specifies the lower position limit.	0…3	sign 32 bit	-999999 … +999999	**0**	mm	in/100	–
b **Upper pos. limit 1**	Specifies the upper position limit.	4…7	sign 32 bit	-999999 … +999999	**0**	mm	in/100	–
Parameter length: 8 bytes								

Hex code of the "position limit value range 1" parameter

The value listed in this table shows the hex coding of the default settings:

Module address	Lower pos. limit 1	Upper pos. limit 1
07	00 00 00 00	00 00 00 00

Input data

no

Output data

no

9.4.3.9 Module 8: Position limit value range 2

Description

The position limit value range 2 parameter defines a distance range with lower and upper limits. If the measured value lies outside of the configured range, the corresponding bit is set in module 6 or, if configured, an output is set.

Parameters

Parameter	Description	Rel. addr.	Data type	Value	Default	Unit		CR to module
						metr.	Inch	
a **Lower pos. limit 2**	Specifies the lower position limit.	0…3	sign 32 bit	-999999 … +999999	**0**	mm	in/100	–
b **Upper pos. limit 2**	Specifies the upper position limit.	4…7	sign 32 bit	-999999 … +999999	**0**	mm	in/100	–
Parameter length: 8 bytes								

Hex code of the "position limit value range 2" parameter

The value listed in this table shows the hex coding of the default settings:

Module address	Lower pos. limit 2	Upper pos. limit 2
08	00 00 00 00	00 00 00 00

Input data

no

Output data

no

9.4.3.10 Module 9: Error handling procedures

Description

The module makes parameters available to handle any errors should they occur.

In the event of a temporary error in the value/velocity calculation (e.g. plausibility error caused by light beam interruption) the laser measurement system transmits the last valid measurement value for a length of time xx which is to be configured.

If the configured time is exceeded, the error display or the faulty measurement value output is activated.

Parameters

Parameter	Description	Rel. addr.	Data type	Value	Default	Unit		CR to module
						metr.	Inch	
a **Position value in the case of error**	Specifies which position value is to be output in the event of an error after the position suppression time has elapsed.	0.0	Bit	0: Last valid value **1: Zero**	**1**	mm	in/100	–
	No function.	0.1	Bit	Always 0	0	–		–
b **Suppress position status**	Specifies whether the PLB status bit is set immediately in the event of an error or if it is suppressed for the configured position suppression time.	0.2	Bit	0: OFF **1: ON**	**1**	–		–
c **Error delay (position)**	Specifies in the event of an error whether the position value immediately outputs the value of the "position value in the case of error" parameter or outputs the last valid position value for the duration of the configured "error delay time".	0.3	Bit	0: OFF **1: ON**	**1**	–		–
d **Error delay time (position)**	Errors which occur are suppressed for the configured time. If no valid position value can be ascertained during the configured time, the last valid position value is output. If the error persists after the time elapses, the value stored in the "position value in the case of error" parameter is output.	1…2	unsign 16 bit	100 … 1000	**100**	ms		–
e **Velocity in the case of error**	Specifies which velocity is to be output in the event of an error after the velocity suppression time has elapsed.	3.0	Bit	0: Last valid value **1: Zero**	**1**	–		–
	No function.	3.1	Bit	Always 0	0	–		–
f **Suppress velocity status**	Specifies whether the PLB status bit is set immediately in the event of an error or if it is suppressed for the configured velocity suppression time.	3.2	Bit	0: OFF **1: ON**	**1**	–		–

g **Error delay (velocity)**	Specifies in the event of an error whether the velocity immediately outputs the value of the "velocity in the case of error" parameter or outputs the last valid velocity for the duration of the configured "error delay time".	3.3	Bit	0: OFF **1: ON**	**1**	–	–
h **Error delay time (velocity)**	Errors which occur are suppressed for the configured time. If no velocity position value can be ascertained during the configured time, the last valid velocity value is output. If the error persists after the time elapses, the value stored in the "velocity in the case of error" parameter is output.	4…5	unsign 16 bit	200 … 1000	**200**	ms	–
Parameter length: 6 bytes							

Hex code of the "Error handling procedures" parameter (position and velocity)

The value listed in this table shows the hex coding of the default settings:

Module address	Position value in the case of error Suppress position status Error delay (position)	Position suppression time	Velocity output in the case of error Suppress velocity status Error delay (velocity)	Velocity suppression time
09	C0	00 64	C0	00 C8

Input data

no

Output data

no

9.4.3.11 Module 10: Velocity

Description

Outputs the current velocity with the configured resolution. The unit (metric or inch) is set in module 1 (position value) and also applies to the velocity. If module 1 is not configured, the AMS 304*i* operates with the default unit (metric).

The sign of the velocity is dependent on the count direction in module 1d.

In the default setting a positive velocity is output when the reflector moves away from the AMS 304*i*. When the reflector moves towards the AMS 304*i*, negative velocities are output. If the "negative" count direction is configured in module 1, the velocity signs are reversed.

Measurement value preparation averages all velocity values calculated during the selected period to yield a velocity value.

Parameters

Parameter	Description	Rel. addr.	Data type	Value	Default	Unit		CR to module
						metr.	Inch	
a **Velocity resolution**	The parameter specifies the resolution for the velocity value.	0.0 … 0.2	Bit	**001=1: 1** 010=2: 10 011=3: 100 100=4: 1000 101=5: free resolution	**1**	mm/s	(in/ 100) /s	20
b **Average**	The parameter specifies the integration time (averaging time) of the calculated velocity values.	0.3 … 0.5	Bit	000=0: 2 001=1: 4 010=2: 8 **011=3: 16** 100=4: 32 101=5: 64 110=6: 128	**3**	ms		–
Parameter length: 2 bytes								

Hex coding of the "velocity" parameter

The value listed in this table shows the hex coding of the default settings:

Module address	Velocity resolution Average
0A	00 19

Input data

Input data	Description	Rel. addr.	Data type	Value	Default	Unit		CR to module
						metr.	Inch	
C **Velocity**	Current velocity.	0	sign 32 bit	**-999999** … +999999	**0**	scaled		–
Input data length: 4 bytes consistently								

Output data

no

9.4.3.12 Module 11: Static velocity limit value 1

Description

The **static velocity limit value 1** function compares the current velocity with a velocity stored in the configuration. This occurs in the configured range, which is defined by **range start** and **range end**.

Notice!

*If **range start** and **range end** are identical, velocity monitoring is not activated.*

If a direction-dependent limit value check is activated via the **direction selection** parameter, the values of **range start** and **range end** also define the direction. The check is always performed from **range start** to **range end**. For example, if the range start is "5500" and the range end is "5000", the direction-dependent check is only performed in the direction from "5500" to "5000". The limit value is not active in the opposite direction.

If the check is independent of direction, the order of **range start** and **range end** is irrelevant. Depending on the selected **switching mode**, if the value is above or below the defined limits, the limit value status in module 16 is set and, if configured, the output is appropriately set via module 4 or 5.

Parameters

Parameter	Description	Rel. addr.	Data type	Value	Default	Unit		CR to module
						metr.	Inch	
a **Switching mode**	Condition for the "velocity limit value 1" signal, which applies to the output (module 4/5) and the status bit (module 16).	0.0	Bit	**0: Value greater than limit** 1: Value less than limit	**0**	–		–
b **Direction selection**	Selection of direction-dependent or direction-independent limit value checking.	0.1	Bit	**0: Direction independent** 1: Direction dependent	**0**	–		–
c **Velocity limit value 1**	Limit value is compared to the current velocity.	1…2	unsign 16 bit	0 … 20000	**0**	mm/s	(in/ 100) /s	16d
d **Velocity hysteresis 1**	Relative shift to prevent signal bouncing.	3…4	unsign 16 bit	0 … 20000	**100**	mm/s	(in/ 100) /s	–
e **Limit value 1 range start**	The velocity limit value is monitored beginning at this position.	5…8	sign 32 bit	-999999 … +999999	**0**	mm	in/ 100	–
f **Limit value 1 range end**	The velocity limit value is monitored up to this position.	9 … 12	sign 32 bit	-999999 … +999999	**0**	mm	in/ 100	–
Parameter length: 13 bytes								

Hex code of the "static velocity limit value 1" parameter

The value listed in this table shows the hex coding of the default settings:

Module address	Switching mode Direction selection	Velocity limit value 1	Velocity hysteresis 1	Limit value 1 range start	Limit value 1 range end
0B	00	00 00	00 64	00 00 00 00	00 00 00 00

Input data

no

Output data

no

9.4.3.13 Module 12: Static velocity limit value 2

Description

The **static velocity limit value 2** function compares the current velocity with a velocity stored in the configuration. This occurs in the configured range, which is defined by **range start** and **range end**.

Notice!

*If **range start** and **range end** are identical, velocity monitoring is not activated.*

If a direction-dependent limit value check is activated via the **direction selection** parameter, the values of **range start** and **range end** also define the direction. The check is always performed from **range start** to **range end**. For example, if the range start is "5500" and the range end is "5000", the direction-dependent check is only performed in the direction from "5500" to "5000". The limit value is not active in the opposite direction.

If the check is independent of direction, the order of **range start** and **range end** is irrelevant. Depending on the selected **switching mode**, if the value is above or below the defined limits, the limit value status in module 16 is set and, if configured, the output is appropriately set via module 4 or 5.

Parameters

Parameter	Description	Rel. addr.	Data type	Value	Default	Unit		CR to module
						metr.	Inch	
a **Switching mode**	Condition for the "velocity limit value 2" signal, which applies to the output (module 4/5) and the status bit (module 16).	0.0	Bit	**0: Value greater than limit** 1: Value less than limit	**0**	–		–
b **Direction selection**	Selection of direction-dependent or direction-independent limit value checking.	0.1	Bit	**0: Direction independent** 1: Direction dependent	**0**	–		–
c **Velocity limit value 2**	Limit value is compared to the current velocity.	1…2	unsign 16 bit	0 … 20000	**0**	mm/s	(in/ 100) /s	16e
d **Velocity hysteresis 2**	Relative shift to prevent signal bouncing.	3…4	unsign 16 bit	0 … 20000	**100**	mm/s	(in/ 100) /s	–
e **Limit value 2 range start**	The velocity limit value is monitored beginning at this position.	5…8	sign 32 bit	-999999 … +999999	**0**	mm	in/100	–
f **Limit value 2 range end**	The velocity limit value is monitored up to this position.	9 … 12	sign 32 bit	-999999 … +999999	**0**	mm	in/100	–
Parameter length: 13 bytes								

Hex code of the "static velocity limit value 2" parameter

The value listed in this table shows the hex coding of the default settings:

Module address	Switching mode Direction selection	Velocity limit value 2	Velocity hysteresis 2	Limit value 2 range start	Limit value 2 range end
0C	00	00 00	00 64	00 00 00 00	00 00 00 00

Input data

no

Output data

no

9.4.3.14 Module 13: Static velocity limit value 3

Description

The **static velocity limit value 3** function compares the current velocity with a velocity stored in the configuration. This occurs in the configured range, which is defined by **range start** and **range end**.

Notice!

*If **range start** and **range end** are identical, velocity monitoring is not activated.*

If a direction-dependent limit value check is activated via the **direction selection** parameter, the values of **range start** and **range end** also define the direction. The check is always performed from **range start** to **range end**. For example, if the range start is "5500" and the range end is "5000", the direction-dependent check is only performed in the direction from "5500" to "5000". The limit value is not active in the opposite direction.

If the check is independent of direction, the order of **range start** and **range end** is irrelevant. Depending on the selected **switching mode**, if the value is above or below the defined limits, the limit value status in module 16 is set and, if configured, the output is appropriately set via module 4 or 5.

Parameters

Parameter	Description	Rel. addr.	Data type	Value	Default	Unit		CR to module
						metr.	Inch	
a **Switching mode**	Condition for the "velocity limit value 3" signal, which applies to the output (module 4/5) and the status bit (module 16).	0.0	Bit	**0: Value greater than limit** 1: Value less than limit	**0**	–		–
b **Direction selection**	Selection of direction-dependent or direction-independent limit value checking.	0.1	Bit	**0: Direction independent** 1: Direction dependent	**0**	–		–
c **Velocity limit value 3**	Limit value is compared to the current velocity.	1…2	unsign 16 bit	0 … 20000	**0**	mm/s	(in/ 100) /s	16f
d **Velocity hysteresis 3**	Relative shift to prevent signal bouncing.	3…4	unsign 16 bit	0 … 20000	**100**	mm/s	(in/ 100) /s	–
e **Limit value 3 range start**	The velocity limit value is monitored beginning at this position.	5…8	sign 32 bit	-999999 … +999999	**0**	mm	in/ 100	–
f **Limit value 3 range end**	The velocity limit value is monitored up to this position.	9 … 12	sign 32 bit	-999999 … +999999	**0**	mm	in/ 100	–
Parameter length: 13 bytes								

Hex code of the "static velocity limit value 3" parameter

The value listed in this table shows the hex coding of the default settings:

Module address	Switching mode Direction selection	Velocity limit value 3	Velocity hysteresis 3	Limit value 3 range start	Limit value 3 range end
0D	00	00 00	00 64	00 00 00 00	00 00 00 00

Input data

no

Output data

no

9.4.3.15 Module 14: Static velocity limit value 4

Description

The **static velocity limit value 4** function compares the current velocity with a velocity stored in the configuration. This occurs in the configured range, which is defined by **range start** and **range end**.

Notice!

*If **range start** and **range end** are identical, velocity monitoring is not activated.*

If a direction-dependent limit value check is activated via the **direction selection** parameter, the values of **range start** and **range end** also define the direction. The check is always performed from **range start** to **range end**. For example, if the range start is "5500" and the range end is "5000", the direction-dependent check is only performed in the direction from "5500" to "5000". The limit value is not active in the opposite direction.

If the check is independent of direction, the order of **range start** and **range end** is irrelevant. Depending on the selected **switching mode**, if the value is above or below the defined limits, the limit value status in module 16 is set and, if configured, the output is appropriately set via module 4 or 5.

Parameters

Parameter	Description	Rel. addr.	Data type	Value	Default	Unit		CR to module
						metr.	Inch	
a **Switching mode**	Condition for the "velocity limit value 4" signal, which applies to the output (module 4/5) and the status bit (module 16).	0.0	Bit	**0: Value greater than limit** 1: Value less than limit	**0**	–		–
b **Direction selection**	Selection of direction-dependent or direction-independent limit value checking.	0.1	Bit	**0: Direction independent** 1: Direction dependent	**0**	–		–
c **Velocity limit value 4**	Limit value is compared to the current velocity.	1…2	unsign 16 bit	0 … 20000	**0**	mm/s	(in/ 100) /s	16 g
d **Velocity hysteresis 4**	Relative shift to prevent signal bouncing.	3…4	unsign 16 bit	0 … 20000	**100**	mm/s	(in/ 100) /s	–
e **Limit value 4 range start**	The velocity limit value is monitored beginning at this position.	5…8	sign 32 bit	-999999 … +999999	**0**	mm	in/100	–
f **Limit value 4 range end**	The velocity limit value is monitored up to this position.	9 … 12	sign 32 bit	-999999 … +999999	**0**	mm	in/100	–
Parameter length: 13 bytes								

Hex code of the "static velocity limit value 4" parameter

The value listed in this table shows the hex coding of the default settings:

Module address	Switching mode Direction selection	Velocity limit value 4	Velocity hysteresis 4	Limit value 4 range start	Limit value 4 range end
0E	00	00 00	00 64	00 00 00 00	00 00 00 00

Input data

no

Output data

no

9.4.3.16 Module 15: Dynamic velocity limit value

Description

The **dynamic velocity limit value** compares the current velocity with a stored velocity within the defined range. If the value is above or below the limit value, the dynamic limit value status in module 16 is set and, if configured, the output is appropriately set. **Limit value**, **hysteresis**, **range start** and **range end** are transferred with the output data of this module by the PROFIBUS master. The transferred values are activated by **Bit 0.0**, i.e. if this bit is set, the AMS 304*i* compares the current velocity with the new limit value conditions.

Notice!

*If **range start** and **range end** are identical, velocity monitoring is not activated.*

Parameters

no

Input data

no

Output data

Output data	Description	Rel. addr.	Data type	Value	Default	Unit		CR to module
						metr.	Inch	
a **Limit value control**	Controls internal processing of the transferred dynamic limit value parameters.	0.0	Bit	0: Do not process 1: Process parameter	–	–		–
b **Switching mode**	Condition for the signal change of the output/status bit.	0.1	Bit	0: Value greater than limit 1: Value less than limit	–	–		–
c **Direction selection**	Selection of direction-dependent or direction-independent limit value checking.	0.2	Bit	0: Direction independent 1: Direction dependent	–	–		–
d **Velocity limit value**	Limit value is compared to the current velocity.	1…2	unsign 16 bit	0 … +20000	–	mm/s	(in/100)/s	16 h
e **Velocity hysteresis**	Relative shift to prevent signal bouncing.	3…4	unsign 16 bit	0 … +20000	–	mm/s	(in/100)/s	–
f **Limit value range start**	The velocity limit value is monitored beginning at this position.	5…8	sign 32 bit	-999999 … +999999	**0**	mm	in/100	–
g **Limit value range end**	The velocity limit value is monitored up to this position.	9 … 12	sign 32 bit	-999999 … +999999	**0**	mm	in/100	–
Output data length: 13 bytes consistently								

9.4.3.17 Module 16: Velocity status

Description

This module supplies the PROFIBUS master with various status information for velocity measurement.

Parameters

no

Input data

Input data	Description	Rel. addr.	Data type	Value	Default	Unit		CR to module
						metr.	Inch	
a **Velocity measurement error**	Signals that no valid velocity could be ascertained.	1.0	Bit	0: OK 1: Error	–	–		–
b **Movement status**	Signals whether a movement >0.1 m/s is currently being detected.	1.1	Bit	0: No movement 1: Movement	–	–		–
c **Movement direction**	When the movement status is activated, this bit indicates the direction.	1.2	Bit	0: Positive direction 1: Negative direction	–	–		–
d **Velocity limit value status 1**	Signals that limit value 1 has been exceeded.	1.3	Bit	0: Limit value maintained 1: Limit value violated	–	–		11c
e **Velocity limit value status 2**	Signals that limit value 2 has been exceeded.	1.4	Bit	0: Limit value maintained 1: Limit value violated	–	–		12c
f **Velocity limit value status 3**	Signals that limit value 3 has been exceeded.	1.5	Bit	0: Limit value maintained 1: Limit value violated	–	–		13c
g **Velocity limit value status 4**	Signals that limit value 4 has been exceeded.	1.6	Bit	0: Limit value maintained 1: Limit value violated	–	–		14c
h **Dynamic velocity limit value status**	Signals that the dynamic limit value has been exceeded.	1.7	Bit	0: Limit value maintained 1: Limit value violated	–	–		15bd
i **Velocity comparison limit value 1**	Signals whether the current velocity is compared with this limit value.	0.3	Bit	0: Comparison not active 1: Comparison active	–	–		–
j **Velocity comparison limit value 2**	Signals whether the current velocity is compared with this limit value.	0.4	Bit	0: Comparison not active 1: Comparison active	–	–		–
k **Velocity comparison limit value 3**	Signals whether the current velocity is compared with this limit value.	0.5	Bit	0: Comparison not active 1: Comparison active	–	–		–

l **Velocity comparison limit value 4**	Signals whether the current velocity is compared with this limit value.	0.6	Bit	0: Comparison not active 1: Comparison active	–	–	–
m **Dynamic velocity comparison**	Signals whether the current velocity is compared with this limit value.	0.7	Bit	0: Comparison not active 1: Comparison active	–	–	–
Input data length: 2 bytes							

Output data

no

9.4.3.18 Module 17: SSI interface

Description

The module defines the parameters for the SSI interface.

Attention!

The SSI interface can only represent positive distance values. If negative output values are ascertained due to the offset or count direction, a zero value is output at the SSI interface! In the event of a number overflow, all data bits are set to "1".

The **unit**, **offset** and **count direction** parameters of module 1 also apply to the SSI interface.

Notice!

If the SSI interface is not configured via module 17 (SSI interface) in PROFIBUS operation, the SSI interface is deactivated.

If the SSI interface is operated without PROFIBUS (PROFIBUS OFF/SSI ON), configuration is performed via the display.

Parameters

Parameter	Description	Rel. addr.	Data type	Value	Default	Unit		CR to module
						metr.	Inch	
a **Coding**	The parameter defines the coding of the SSI data.	0.0	Bit	0: Binary **1: Gray**	**1**	–		–
b **Mode**	The parameter defines the number of data bits.	0.1 … 0.2	Bit	**00=0: 24Bit** 01=1: 25Bit 10=2: 26Bit	**0**	–		–
c **Resolution**	The parameter defines the resolution of the SSI position value.	0.3 … 0.5	Bit	001=1: 0.001 010=2: 0.01 **011=3: 0.1** 100=4: 1 101=5: 10 110=6: free resolution	**3**	mm	in/100	1b 6d 19a
d **Update rate**	The parameter defines the update rate of the measurement values at the SSI interface. The measurement value is updated independent of the clock frequency.	0.6	Bit	**0: 1.7 ms** 1: 0.2 ms	**0**	ms		–
e **Clock frequency**		0.7	Bit	**0: 80 kHz - 800 kHz monoflop time 20 us** 1: 50 kHz - 79 kHz monoflop time 30 us	**0**			
f **Error bit** **Attention! The attached error bit always has the following significance:** **0: No error** **1: Error**	**Error bit off/on** The parameter defines the meaning of the error bit. If the error bit = **OFF**, no bit is attached to the data. The remaining bits 1 to 6 activate the various events which apply to the error bit. The bits are **OR**-linked to each other.	1.0	Bit	0: OFF **1: ON**	**1**	–		–
	Overflow Output value exceeds the maximum value which can be represented. In the event of an overflow, all data bits are set to 1.	1.1	Bit	**0: OFF** 1: ON	**0**	–		–
	Intensity (ATT) If the intensity of the received signal is less than the warning threshold, the bit is set.	1.2	Bit	**0: OFF** 1: ON	**0**	–		–
	Temperature (TMP) Maximum internal device temperature exceeded.	1.3	Bit	**0: OFF** 1: ON	**0**	–		–
	Laser (LSR) Laser prefailure message.	1.4	Bit	**0: OFF** 1: ON	**0**	–		–
	Plausibility (PLB) Plausibility error.	1.5	Bit	0: OFF **1: ON**	**1**	–		–
	Hardware (ERR) Hardware error.	1.6	Bit	0: OFF **1: ON**	**1**	–		–
Parameter length: 2 bytes								

Hex coding of the "SSI interface" parameter

The value listed in this table shows the hex coding of the default settings:

Module address	Coding Mode Resolution Update rate	Error bits
11	19	61

Input data

no

Output data

no

Notice!

Resolution and maximum position value which can be represented:

SSI setting	Max. distance which can be represented Metric	Max. distance which can be represented Inches (in)	
24-bit; resolution 0.1	1,677 m	16,777 in	≈ 426 m
24-bit; resolution 0.01	167 m	1,677 in	≈ 42 m
24-bit; resolution 0.001	16 m	167 in	≈ 4 m
25-bit; resolution 0.1	3,355 m	33,554 in	≈ 852 m
25-bit; resolution 0.01	335 m	3,355 in	≈ 85 m
25-bit; resolution 0.001	33 m	335 in	≈ 8 m
26-bit; resolution 0.1	6,710 m	67,108 in	≈ 1.704 m
26-bit; resolution 0.01	671 m	6,710 in	≈ 170 m
26-bit; resolution 0.001	67 m	671 in	≈ 17 m

Figure 9.19: SSI interface - resolution and maximum position value which can be represented

9.4.3.20 Module 18: module for display language, illumination and contrast, password, heating control

Description

Parameters for general operation are set in this module.

Parameters

Parameter	Description	Rel. addr.	Data type	Value	Default	Unit		CR to module
						metr.	Inch	
a **Language selection**	Language selection for the display. A language which was selected via the display is overwritten by this parameter.	0.0 … 0.2	Bit	**000=0: English** 001=1: German 010=2: Italian 011=3: Spanish 100=4: French	**0**	–		–
b **Display illumination**	Off after 10 min. or always on.	0.3	Bit	**0: Off after 10 min.** 1: Always on	**0**	–		–
c **Display contrast**	Contrast setting of the display. The contrast changes under extreme ambient temperatures and can be adjusted with this parameter.	0.4 … 0.5	Bit	000=0: Weak **001=1: Medium** 010=2: Strong	**1**	–		–
d **Password protection**	Password protection on/off.	0.7	Bit	**0: OFF** 1: ON	**0**	–		–
e **Password**	Specifies the password. Password protection must be on.	1…2	unsign 16 bit	0000 … 9999	**0000**	–		–
f **Heating control**	Defines a switch-on/switch-off range for the heating control. The extended switch-on/switch-off range for heating may provide relief in the event of condensation problems. There is no guarantee that no condensation will occur on the optics in the extended switch-on/switch-off range due to the limited heating capacity. This parameter is available as standard, but functions only for devices with integrated heating (AMS 304*i*… H).	3.0	Bit	**0 = Standard (10°C … 15°C)** 1 = Extended (30°C … 35°C)	**0**	–		–
Parameter length: 4 bytes								

Hex coding of the "other" parameter

The value listed in this table shows the hex coding of the default settings:

Module address	Language Display illumination Display contrast Password protection	Password
12	10	00

Input data

no

Output data

no

ПРОМЭЛЕКТРОНИКА / sales@prom-elec.com

9.4.3.21 Module 20: free resolution

Description

Free resolution is used when the resolutions set in the standard are not appropriate. If a free resolution is used, it must be activated in module 10a.

Module 10a and module 1c must be set to configure the free resolution.

Parameters

Parameter	Description	Rel. addr.	Data type	Value	Default	Unit		CR to module
						metr.	Inch	
a **Free resolution position**	This module allows the output measurement values for position and velocity to be freely scaled. The parameters apply to all interfaces for which the “free resolution” resolution was selected. The internal measurement value is multiplied by the set value on the basis of (mm/1000). Example: Value “3000” means that in the event of a change in the measurement value by 3 mm, the position value in the binary code changes by binary 1. Due to the free resolution in the example, an internal measurement value of 3333 mm gives an output value of “1111”. The resolution of the “Offset", "Preset" and "Limit values" parameters is not affected by free resolution.	0 … 1	unsign 16 bit	5 …50000	**1000**	mm/10^3	in/10^5	1c
b **Free resolution velocity**		2 … 3	unsign 16 bit	5 …50000	**1000**	(mm/10^3)/s	(in/10^5)/s	10a
Parameter length: 4 bytes								

10 SSI

10.1 Principle functionality of the SSI interface

Data communication of the SSI interface is based on differential transmission as used for RS 422 interfaces. Transmission of the position value, beginning with the MSB (most significant bit), is thus synchronised with a clock cycle (CLOCK) specified by the control.

In the quiescent state both the clock line as well as the data line are at HIGH level. At the first HIGH-LOW edge (point ① in figure 10.1) the data in the internal register are stored. Thus it is ensured that the data cannot change during serial transmission.

When the next clock signal change from LOW to HIGH level (point ② in figure 10.1) occurs transmission of the position value begins with the most significant bit (MSB). With each successive change of the clock signal from LOW to HIGH level the next least-significant bit is transmitted on the data line. After the least significant bit (LSB) has been output, the clock signal switches from LOW to HIGH for one last time and the data line switches to LOW level (end of transmission).

A monoflop retriggered by the clock signal determines the time span before the SSI interface can be called for the next transmission. This results in the minimum pause time between two successive clock cycles. If time tm = 20µs has elapsed, the data line is returned to the quiescent level (HIGH) (point ③ in figure 10.1). This signals completed data communication and that the device is again ready for transmission.

Notice!

If the off-cycle of data transmission is interrupted for longer than t_m = 20µs, the next cycle will begin with a completely new transmission cycle with a newly calculated value.

If a new transmission cycle is started before time t_m has elapsed, the previous value is output again.

Attention!

The SSI interface can only represent positive distance values. If negative output values are ascertained due to the offset or count direction, a zero value is output at the SSI interface! In the event of a number overflow, all data bits are set to "1".

10.1.1 SSI sequence diagram

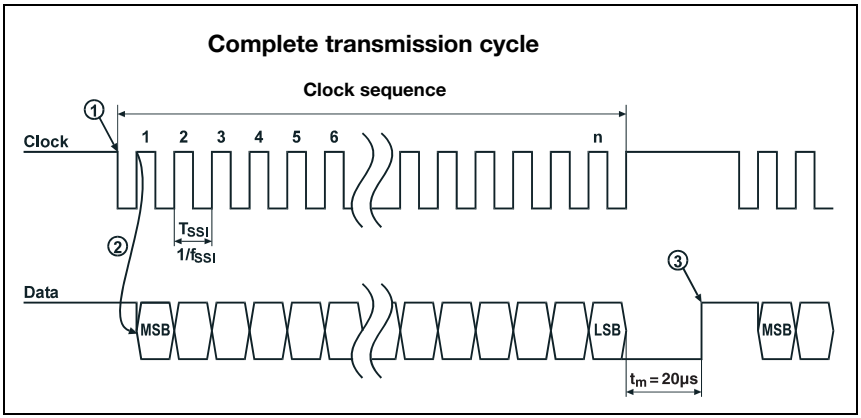

Figure 10.1: SSI data transmission sequence diagram

Notice!

*In the default setting the **LSB** bit is the error bit.*

Attention!

***Significance of the error bit**:*

By default a 25th error bit (LSB) is appended to the 24-bit measurement value.
The error bit is not included in the Gray coding of the measurement value.
The error bit is 1 = active, 0 = not active.

Notice!

The data can be read out with a clock rate between 80 kHz and 800 kHz.

Attention!

***Updating the measurement values on the SSI interface of the** AMS 304i:*

The measurement value on the SSI interface of the AMS 304i is updated every 1.7 ms (default) independent of the clock frequency.
The update rate on the interface can be reduced to 0.2 ms via the display under the SSI menu item or in PROFIBUS module 17.
The shorter update rate is only valid for the SSI interface and has no influence on the PROFIBUS DP interface.

10.1.2 Cable length as a function of the data rate

Only shielded and twisted pair lines (pin 1 with 2 and pin 3 with 4) are permitted as data lines for the SSI interface (see chapter 10.2 "SSI - Electrical connection").

- *The shielding must be connected at both ends.*
- *Do not lay the cable parallel to power cables.*

The maximum possible cable length is dependent on the cable used and the clock rate:

Data rate	80 kBit/s	100 kBit/s	200 kBit/s	300 kBit/s	400 kBit/s	500 kBit/s	1,000 kBit/s
Max. cable length (typical)	500 m	400 m	200 m	100 m	50 m	25 m	10 m

Table 10.1: Max. cable length as a function of the clock rate

10.2 SSI - Electrical connection

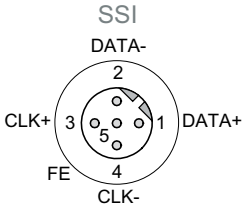

SSI connector (5-pin plug, B-coded)		
Pin	**Name**	**Remark**
1	**DATA+**	+ Data line SSI (output)
2	**DATA-**	- Data line SSI (output)
3	**CLK+**	+ Clock line SSI (input electrically insulated)
4	**CLK-**	- Clock line SSI (input electrically insulated)
5	**FE**	Functional earth
Thread	**FE**	Functional earth (housing)

Figure 10.2: SSI - electrical connection

Notice!

To connect the SSI interface we recommend our ready-made SSI cables, see "PROFIBUS and SSI connection cable order codes" on page 108.

10.3 General Information to the AMS 304*i* parameters

Attention!

***Using the PROFIBUS and SSI interface simultaneously**:*
The SSI interface settings are performed by the PROFIBUS. If settings which differ from the default settings for the parameters, are to be used, they must be configured via module 17 (SSI interface).

***Using the SSI interface without PROFIBUS**:*
For this operating mode deactivate the PROFIBUS via the display (PROFIBUS = OFF).
Default parameters are stored in the laser measurement system for the sole use of the SSI interface. The preset default parameters can be changed at any time via the display.
This also applies when using parameters which do not relate directly to the SSI interface (for example: I/O 1 or I/O 2, position value or others).
The SSI interface remains active even during parameter enabling. Changes to parameters have an immediate effect.

10.4 Default settings of the SSI interface

Default parameters which apply only to the SSI interface.	
SSI activation	ON
Measurement value coding	Gray
Transmission mode	24-bit measurement value + 1-bit error (error: 1 = active), error bit = LSB
Resolution	0.1 mm
Default error bit	Plausibility error or hardware error
Update rate	1,7 ms
Default parameters which apply to both PROFIBUS and SSI.	
Measurement unit	Metric
Count direction	Positive (the SSI interface cannot represent negative values)
I/O 1	Output – plausibility error or hardware error
I/O 2	Output – temperature error, intensity error or laser prefailure message
Static preset	+000.000
Dynamic preset	+000.000
Position limit value range 1	Lower limit and upper limit: both 0
Position limit value range 2	Lower limit and upper limit: both 0
Error handling procedures	Position output: 0
	Suppress position status: active
	Position suppression time: 100 ms
Display language	English
Display illumination	OFF after 10 min.
Display contrast	Medium
Password protection	Off
Password	0000

Table 10.2: Default settings of the SSI interface

10.4.1 Changing the SSI settings via the display

Notice!

For basic operation of the display please refer to chapter 8.2.3.
In order to change the parameters please activate parameter enabling.
The SSI interface remains active even during parameter enabling. Changes to parameters have an immediate effect.

11 Diagnostics and troubleshooting

11.1 Service and diagnostics in the display of the AMS 304*i*

In the main menu of the AMS 304*i*, expanded "Diagnostics" can be called up under the Service heading.

```
Service
 Status messages
 Diagnostics
 Expanded diagnostics
```

From the Service main menu, press the enter button ↵ to access the underlying menu level.

Use the up/down buttons ▲ ▼ to select the corresponding menu item in the selected level; use the enter button ↵ to activate the selection.

Return from any sub-level to the next-higher menu item by pressing the ESC button ESC.

11.1.1 Status messages

The status messages are written in a ring memory with 25 positions. The ring memory is organized according to the FIFO principle. No separate activation is necessary for storing the status messages. Power OFF clears the ring memory.

```
Status messages
1: - / - / -
2: - / - / -
3: - / - / -
```

Basic representation of the status messages

n: Type / No. / 1

Meaning:

n:	memory position in the ring memory
Type:	type of message: **I** = info, **W** = warning, **E** = error, **F** = severe system error
No:	internal error detection
1:	frequency of the event (always "1", since no summation occurs)

The status messages within the ring memory are selected with the up/down buttons ▲ ▼. The enter button ↵ can be used to call up **detailed information** on the corresponding status messages with the following details:

Detailed information about a status message

Type: type of message + internal counter

UID: Leuze internal coding of the message

ID: description of the message

Info: not currently used

Within the detailed information, the enter button ↵ can be pressed again to activate an **action menu** with the following functions:

- Acknowledge message
- Delete message
- Acknowledge all
- Delete all

11.1.2 Diagnostics

The diagnostics function is activated by selecting the `Diagnostics` menu item. The ESC button (ESC) deactivates the diagnostics function and clears the contents of the recordings.

The recorded diagnostic data are displayed in 2 fields. In the upper half of the display, status messages of the AMS and the bar graph are displayed. The lower half contains information that assists in a Leuze-internal evaluation.

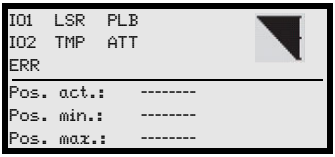

Use the up/down buttons (▲) (▼) to scroll in the bottom half between various displays. The contents of the scrollable pages are intended solely for Leuze for internal evaluation.

The diagnostics have no influence on the communication to the host interface and can be activated during operation of the AMS 304*i*.

11.1.3 Expanded diagnostics

The `Expanded diagnostics` menu item is used for Leuze-internal evaluation.

11.2 General causes of errors

11.2.1 Power LED

See also chapter 8.2.2.

Error	Possible error cause	Measure
PWR LED "OFF"	No supply voltage connected	Check supply voltage.
	Hardware error	Send in device.
PWR-LED "flashes red"	Light beam interruption	Check alignment.
	Plausibility error	Traverse rate >10m/s.
PWR-LED "static red"	Hardware error	For error description, see display, It may be necessary to send in the device.

Table 11.1: General causes of errors

11.3 Interface errors

11.3.1 BUS LED

Error	Possible error cause	Measure
BUS LED "OFF" (no communication via PROFIBUS)	No supply voltage connected	Check supply voltage.
	Incorrect wiring.	Check wiring.
	Wrong termination	Check termination.
	Incorrect PROFIBUS address	Check PROFIBUS address.
	PROFIBUS deactivated	Activate PROFIBUS in the AMS 304*i*.
	Configuration error	Check configuration.
BUS-LED "flashes red"	Communication error: configuration failed ("parameter failure") DP Error: no data exchange	• Check configuration. • Carry out a reset on the control.
BUS-LED "red" (sporadic error at the PROFIBUS)	Incorrect wiring.	Check wiring.
	Wrong termination	Check termination.
	Effects due to EMC.	• Check shielding. • Check grounding concept and connection to FE. • Avoid EMC coupling caused by power cables laid parallel to device lines.
	Overall network expansion exceeded.	Check max. network expansion as a function of the baud rate set.

Table 11.2: Bus error

11.4 Status display in the display of the AMS 304*i*

Display	Possible error cause	Measure
PLB (implausible measurement values)	Laser beam interruption	Laser spot must always be incident on the reflector.
	Laser spot outside of reflector	Traverse rate < 10m/s?
	Measurement range for maximum distance exceeded	Restrict traversing path or select AMS with larger measurement range.
	Velocity greater than 10m/s	Reduce velocity.
	Ambient temperature far outside of the permissible range (TMP display; PLB)	Select AMS with heating or ensure cooling.

Display	Possible error cause	Measure
ATT (insufficient received signal level)	Reflector soiled	Clean reflector or glass lens.
	Glass lens of the AMS soiled	
	Performance reduction due to snow, rain, fog, condensing vapor, or heavily polluted air (oil mist, dust)	Optimize usage conditions.
	Laser spot only partially on the reflector	Check alignment.
	Protective foil on the reflector	Remove protective foil from reflector.
TMP (operating temperature outside of specification)	Ambient temperatures outside of the specified range	In case of low temperatures, remedy may be an AMS with heating. If temperatures are too high, provide cooling or change mounting location.
LSR Laser diode warning	Laser diode prefailure message	Send in device at next possible opportunity to have laser diode replaced. Have replacement device ready.
ERR Hardware error.	Indicates an uncorrectable error in the hardware	Send in device for repair.

Notice!

*Please use **chapter 11 as a master copy** should servicing be required.*
Cross the items in the "Measures" column which you have already examined, fill out the following address field and fax the pages together with your service contract to the fax number listed below.

Customer data (please complete)

Device type:	
Company:	
Contact partner / department:	
Phone (direct):	
Fax:	
Street / No:	
ZIP code/City:	
Country:	

Leuze Service fax number:

+49 7021 573 - 199

12 Type overview and accessories

12.1 Type key

AMS 3xx *i* yyy H

Heating option	H =	With heating
Sensing distance	40	Max. operating range in m
	120	Max. operating range in m
	200	Max. operating range in m
	300	Max. operating range in m
	i =	Integrated fieldbus technology
Interface	00	RS 422/RS 232
	01	RS 485
	04	PROFIBUS DP / SSI
	08	TCP/IP
	35	CANopen
	38	EtherCAT
	48	PROFINET RT
	55	DeviceNet
	58	Ethernet/IP
	84	Interbus
	AMS	**A**bsolute **M**easuring **S**ystem

12.2 Type overview AMS 304*i* (PROFIBUS)

Type designation	Description	Part no.
AMS 304*i* 40	40 m operating range, PROFIBUS/SSI interface	50113677
AMS 304*i* 120	120 m operating range, PROFIBUS/SSI interface	50113678
AMS 304*i* 200	200 m operating range, PROFIBUS/SSI interface	50113679
AMS 304*i* 300	300 m operating range, PROFIBUS/SSI interface	50113680
AMS 304*i* 40 H	40 m operating range, PROFIBUS/SSI interface, integrated heating	50113681
AMS 304*i* 120 H	120 m operating range, PROFIBUS/SSI interface, integrated heating	50113682
AMS 304*i* 200 H	200 m operating range, PROFIBUS/SSI interface, integrated heating	50113683
AMS 304*i* 300 H	300 m operating range, PROFIBUS/SSI interface, integrated heating	50113684

Table 12.1: Type overview AMS 304*i*

12.3 Overview of reflector types

Type designation	Description	Part no.
Reflective tape 200x200-S	Reflective tape, 200x200mm, self-adhesive	50104361
Reflective tape 500x500-S	Reflective tape, 500x500mm, self-adhesive	50104362
Reflective tape 914x914-S	Reflective tape, 914x914mm, self-adhesive	50108988
Reflective tape 200x200-M	Reflective tape, 200x200mm, affixed to aluminum plate	50104364
Reflective tape 500x500-M	Reflective tape, 500x500mm, affixed to aluminum plate	50104365
Reflective tape 914x914-M	Reflective tape, 914x914mm, affixed to aluminum plate	50104366
Reflective tape 200x200-H	Heated reflective tape, 200 x 200mm	50115020
Reflective tape 500x500-H	Heated reflective tape, 500 x 500mm	50115021
Reflective tape 914x914-H	Heated reflective tape, 914 x 914mm	50115022

Table 12.2: Overview of reflector types

12.4 Accessories

12.4.1 Accessory mounting bracket

Type designation	Description	Part no.
MW OMS/AMS 01	Mounting bracket for mounting the AMS 304*i* to horizontal surfaces	50107255

Table 12.3: Accessory mounting bracket

12.4.2 Accessory deflector unit

Type designation	Description	Part no.
US AMS 01	Deflector unit with integrated mounting bracket for the AMS 304*i*. Variable 90° deflection of the laser beam in various directions	50104479
US 1 OMS	Deflector unit without mounting bracket for simple 90° deflection of the laser beam	50035630

Table 12.4: Accessory deflector unit

12.4.3 Accessory M12 connector

Type designation	Description	Part no.
KD 02-5-BA	M12 connector, B-coded socket, BUS IN	50038538
KD 02-5-SA	M12 connector, B-coded plug, BUS OUT; SSI	50038537
KD 095-5A	M12 connector, A-coded socket, Power (PWR)	50020501

Table 12.5: Accessory M12 connector

12.4.4 Accessory terminating resistor

Type designation	Description	Part no.
TS 02-4-SA	M12 terminating resistor for PROFIBUS BUS OUT	50038539

Table 12.6: Accessory terminating resistor

12.4.5 Accessory ready-made cables for voltage supply

Contact assignment/wire color of PWR connection cable

PWR connection cable (5-pin socket, A-coded)			
PWR 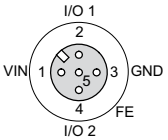 **M12 socket (A-coded)**	**Pin**	**Name**	**Core color**
	1	VIN	**brown**
	2	I/O 1	**white**
	3	GND	**blue**
	4	I/O 2	**black**
	5	FE	**gray**
	Thread	FE	**bare**

Specifications of the cables for voltage supply

Operating temperature range in rest state: -30°C … +70°C
in motion: -5°C … +70°C

Material sheathing: PVC

Bending radius > 50 mm

Order codes of the cables for voltage supply

Type designation	Description	Part no.
K-D M12A-5P-5m-PVC	M12 socket, A-coded, axial plug outlet, open cable end, cable length 5 m	50104557
K-D M12A-5P-10m-PVC	M12 socket, A-coded, axial plug outlet, open cable end, cable length 10 m	50104559

12.4.6 Accessory ready-made cables for PROFIBUS

General

- Cable **KB PB…** for connecting to the BUS IN/BUS OUT M12 connector
- **KB SSI…** cable for connecting to the SSI M12 connector
- Standard cables available in lengths from 2 … 30m
- Special cables on request.

Contact assignments of PROFIBUS connection cable

PROFIBUS connection cable (5-pin socket/connector, B-coded, 2-pin cable)

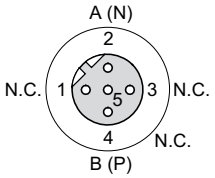

M12 socket (B-coded)

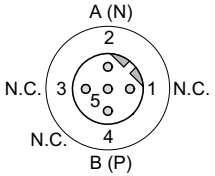

M12 connector (B-coded)

Pin	Name	Core color
1	NC	-
2	A (N)	**green**
3	NC	-
4	B (P)	**red**
5	NC	-
Thread	FE	**Functional earth (housing)**

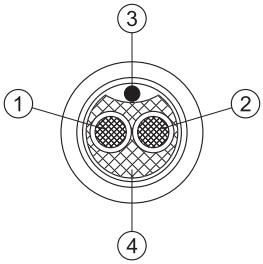

1 Conductor with insulation **red**
2 Conductor with insulation **green**
3 Drain wire
4 Fibrous fleece

Contact assignments of SSI connection cable

SSI/IBS connection cable (5-pin socket, B-coded)			
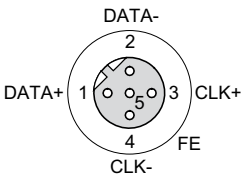 **M12 socket (B-coded)**	**Pin**	**Name**	**Core color**
	1	DATA+	**yellow**
	2	DATA-	**green**
	3	CLK+	**gray**
	4	CLK-	**pink**
	5	FE	**brown**
	Thread	FE	**bare**

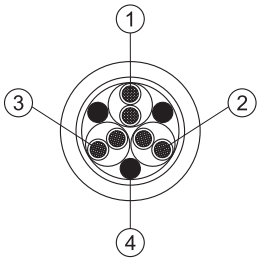

1 Conductor pair with **white/brown** insulation
2 Conductor pair with **green/yellow** insulation
3 Conductor pair with **gray/pink** insulation
4 Filler (polyester threads)

All conductor pairs stranded,
colors in accordance with DIN 47100

Technical data of PROFIBUS a nd SSI connection cable

Operating temperature range in rest state: -40°C … +80°C
in motion: -5°C … +80°C

Material the lines comply with the PROFIBUS requirements, free of halogens, silicone and PVC

Bending radius > 80mm, suitable for drag chains

PROFIBUS and SSI connection cable order codes

Type designation	Remark	Part no.
KB PB-2000-BA	M12 socket for BUS IN, axial connector, open cable end, cable length 2m	50104181
KB PB-5000-BA	M12 socket for BUS IN, axial connector, open cable end, cable length 5m	50104180
KB PB-10000-BA	M12 socket for BUS IN, axial connector, open cable end, cable length 10m	50104179
KB PB-15000-BA	M12 socket for BUS IN, axial connector, open cable end, cable length 15m	50104178

Type designation	Remark	Part no.
KB PB-20000-BA	M12 socket for BUS IN, axial connector, open cable end, cable length 20m	50104177
KB PB-25000-BA	M12 socket for BUS IN, axial connector, open cable end, cable length 25m	50104176
KB PB-30000-BA	M12 socket for BUS IN, axial connector, open cable end, cable length 30m	50104175
KB PB-2000-SA	M12 plug for BUS OUT, axial connector, open cable end, cable length 2m	50104188
KB PB-5000-SA	M12 plug for BUS OUT, axial connector, open cable end, cable length 5m	50104187
KB PB-10000-SA	M12 plug for BUS OUT, axial connector, open cable end, cable length 10m	50104186
KB PB-15000-SA	M12 plug for BUS OUT, axial connector, open cable end, cable length 15m	50104185
KB PB-20000-SA	M12 plug for BUS OUT, axial connector, open cable end, cable length 20m	50104184
KB PB-25000-SA	M12 plug for BUS OUT, axial connector, open cable end, cable length 25m	50104183
KB PB-30000-SA	M12 plug for BUS OUT, axial connector, open cable end, cable length 30m	50104182
KB PB-1000-SBA	M12 plug + M12 socket for PROFIBUS, axial connectors, cable length 1m	50104096
KB PB-2000-SBA	M12 plug + M12 socket for PROFIBUS, axial connectors, cable length 2m	50104097
KB PB-5000-SBA	M12 plug + M12 socket for PROFIBUS, axial connectors, cable length 5m	50104098
KB PB-10000-SBA	M12 plug + M12 socket for PROFIBUS, axial connectors, cable length 10m	50104099
KB PB-15000-SBA	M12 plug + M12 socket for PROFIBUS, axial connectors, cable length 15m	50104100
KB PB-20000-SBA	M12 plug + M12 socket for PROFIBUS, axial connectors, cable length 20m	50104101
KB PB-25000-SBA	M12 plug + M12 socket for PROFIBUS, axial connectors, cable length 25m	50104174
KB PB-30000-SBA	M12 plug + M12 socket for PROFIBUS, axial connectors, cable length 30m	50104173
KB SSI/IBS-2000-BA	M12 socket, B-coded, for SSI/Interbus, axial connector, open cable end, cable length 2m	50104172
KB SSI/IBS-5000-BA	M12 socket, B-coded, for SSI/Interbus, axial connector, open cable end, cable length 5m	50104171
KB SSI/IBS-10000-BA	M12 socket, B-coded, for SSI/Interbus, axial connector, open cable end, cable length 10m	50104170
KB SSI/IBS-15000-BA	M12 socket, B-coded, for SSI/Interbus, axial connector, open cable end, cable length 15m	50104169
KB SSI/IBS-20000-BA	M12 socket, B-coded, for SSI/Interbus, axial connector, open cable end, cable length 20m	50104168
KB SSI/IBS-25000-BA	M12 socket, B-coded, for SSI/Interbus, axial connector, open cable end, cable length 25m	50108447
KB SSI/IBS-30000-BA	M12 socket, B-coded, for SSI/Interbus, axial connector, open cable end, cable length 30m	50108446

13 Maintenance

13.1 General maintenance information

With normal use, the laser measurement system does not require any maintenance by the operator.

Cleaning

In the event of dust build-up or if the (ATT) warning message is displayed, clean the device with a soft cloth; use a cleaning agent (commercially available glass cleaner) if necessary.

Also check the reflector for possible soiling.

Attention!

Do not use solvents and cleaning agents containing acetone. Use of such solvents could blur the reflector, the housing window and the display.

13.2 Repairs, servicing

Attention!

Access to or changes on the device, except where expressly described in this operating manual, are not authorized.
The device must not be opened. Failure to comply will render the guarantee void. Warranted features cannot be guaranteed after the device has been opened.

Repairs to the device must only be carried out by the manufacturer.

↳ *Contact your Leuze distributor or service organization should repairs be required. The addresses can be found on the inside of the cover and on the back.*

Notice!

When sending the laser measurement systems to Leuze electronic for repair, please provide an accurate description of the error.

13.3 Disassembling, packing, disposing

Repacking

For later reuse, the device is to be packed so that it is protected.

Notice!

Electrical scrap is a special waste product! Observe the locally applicable regulations regarding disposal of the product.

A

Accessories 104
Accessory deflector unit 105
Accessory mounting bracket 105
Accessory ready-made cables 106
Accessory terminating resistor 106
Accuracy 14
Air humidity 15
Alignment 20
ATT 70

B

BUS LED 43

C

Cleaning 110
Connections
- PROFIBUS BUS IN 38
- PROFIBUS BUS OUT 39
- PWR IN 38
- Service 40
- SSI 39

Control 57, 70
Control buttons 44
Control panel 41
Count direction 60

D

Declaration of conformity 5
Deflector unit
- Maximum ranges 24
- With integrated mounting bracket 24
- Without mounting bracket 26

Deflector unit US 1 OMS
- Dimensioned drawing 26

Deflector unit US AMS 01
- Dimensioned drawing 25

Description of functions 6
Diagnostics 100
Dimensioned drawing of AMS 3xxi 16
Display 41
- Contrast 92
- Illumination 92, 94

E

Electrical connection 37
- Safety notices 37

ERR 70
Error handling procedures 57, 74
Expanded diagnostics 101
Explanation of symbols 5

F

Fast commissioning 12

G

General causes of errors 102
GSD file 55
GSD modules 57

H

Heated reflectors
- Dimensioned drawing 31
- Specifications 30

I

I/O 1 57
I/O 2 57
Input/output
- IO 1 64
- IO 2 67

Installation 18
Interface errors 102
Interface info in display 42
Internal hardware error 42

L

Language selection 92
Laser status 70
LSR 70
LSR status display 103

M

Main menu
- Device information 45
- Language selection 46
- Network information 45
- Parameter 46

Service 46
Maintenance 110
Maximum position value 57, 60
Measurement range 14
Measurement unit 60
Measurement value output 14
Menus
Language selection menu 50
Main menu 45
Parameter menu 46
Service menu 51
Mounting 19
with laser beam deflector unit 24
Mounting bracket(optional) 21
Mounting distances 22

N

Name plates 18

O

Offset 60
Operating principle 12
Operating temperature 15
Operation 41, 51
Overflow 70
Overview of reflector types 105

P

Packaging 18
Parameter enabling 51, 52
Parameter menu
I/O 49
Maximum position value 48
Other 50
Parameter handling 46
PROFIBUS 47
SSI 47
Password 92
Plausibility error 42
PLB 70
Position limit value 72, 73
Position limit value 1 57
Position limit value 2 57
Prefailure message 42
Preset 62
Dynamic 57, 63
Static 57, 62
PROFIBUS address entry 55
PWR LED 43

Q

Quality assurance 5

R

Received signal 42
Reflective tape
Dimensioned drawing 29
Specifications 28
Reflector 27
Mounting 33
Pitch 36
Size 32
Type overview 32
Repair 110
Resolution 60

S

Sensing distance 104
Servicing 110
Sign 60
Specifications 14
Dimensioned drawing 16
General specifications 14
Reflective tapes 27
SSI 95
Default settings 98, 99
Electrical connection 97
SSI interface 58, 89
Status 57, 70
Status and measurement data - main menu 46
Status- and warning messages 41
Status display 41
ATT 103
ERR 103
PLB 102

TMP 103
Status display in the display 102
Status displays 43
Status messages 100
Storage 18
Storage temperature 15
Supply voltage 14
Surface reflections 34
Symbols 5

T

Temperature monitoring 42
Termination 39, 54, 106
TMP 70
Transport 18
Troubleshooting 100
Type overview 17, 104

V

Velocity 57, 76
Dynamic limit value 58, 86
Limit value 1 . . . . . 58, 78
Limit value 2 . . . . . 58, 80
Limit value 3 . . . . . 58, 82
Limit value 4 . . . . . 58, 84
Status 58, 87

Level 1 ▲▼ : selection	Level 2 ▲▼ : selection ESC : back	Level 3 ▲▼ : selection ESC : back	Level 4 ▲▼ : selection ESC : back	Level 5 ▲▼ : selection ESC : back	Selection/configuration option ▲▼ : selection ↵ : activate ESC : back	Detailed information on
Device information						page 43
Network information						page 43
Status- and measurement data						page 43
Parameter ↵	Parameter handling	↵ Parameter enabling			ON / OFF	page 44
		↵ Password	↵ Activate password		ON / OFF	
			↵ Password entry		Configuration option of a four-digit numerical password	
		↵ Parameters to default			All parameters are reset to their factory settings	
	↵ PROFIBUS	↵ Activation			ON / OFF	page 45
		↵ Address			Address of the AMS 304*i*, 0 … 126	
	↵ SSI	↵ Activation			ON / OFF	page 45
		↵ Coding			Binary/gray	
		↵ Number of data bits			24-bit/25-bit/26-bit	
		↵ SSI resolution			0.001 mm / 0.01 mm / 0.1 mm / 1 mm / 10 mm / free resolution	
		↵ Error bit			ON / OFF	
		↵ Error bit function			Overflow, intensity (ATT) temp. (TMP) laser (LSR) plausibility (PLB) hardware (ERR)	
		↵ Update rate			1.7 ms / 0.2 ms	
		↵ Clock frequency			80 kHz - 800 kHz, 20 us / 50 kHz - 79 kHz, monoflop time 30 us	
	↵ Maximum position value	↵ Measurement unit			Metric/Inch	page 46
		↵ Count direction			Positive/Negative	
		↵ Offset			Value input:	
		↵ Preset			Value input	
		↵ Error delay			ON / OFF	
		↵ Position value in the case of error			Last valid value / zero	
		↵ Free resolution value			5 …50000	
	↵ I/O	↵ I/O 1	↵ Port configuration		Input/Output	page 46
			↵ Switching input	↵ Function	No function/preset teach/laser ON/OFF	
				↵ Activation	Low active/High active	
			↵ Switching output	↵ Function	Pos. limit value 1 / pos. limit value 2 / speed / intensity (ATT) / temp. (TMP) / laser (LSR) / plausibility (PLB) / hardware (ERR)	
				↵ Activation	Low active/High active	
		↵ I/O 2	↵ Port configuration		Input/Output	
			↵ Switching input	↵ Function	No function/preset teach/laser ON/OFF	
				↵ Activation	Low active/High active	
			↵ Switching output	↵ Function	Pos. limit value 1 / pos. limit value 2 / speed / intensity (ATT) / temp. (TMP) / laser (LSR) / plausibility (PLB) / hardware (ERR)	
				↵ Activation	Low active/High active	

			Limit values	Upper pos. limit 1	Activation	ON / OFF	
					Limit value input	Value input in mm or inch/100	
				Lower pos. limit 1	Activation	ON / OFF	
					Limit value input	Value input in mm or inch/100	
				Upper pos. limit 2	Activation	ON / OFF	
					Limit value input	Value input in mm or inch/100	
				Lower pos. limit 2	Pos limit value active.	ON / OFF	
					Maximum position value	Value input in mm or inch/100	
				Max. velocity	Activation	ON / OFF	
					Max. velocity	Value input in mm/s or inch/100s	
		Other	Heating control			Standard/extended (10°C … 15°C/30°C … 35°C)	page 48
			Display background			10 minutes/ON	
			Display contrast			Weak/Medium/Strong	
			Service RS232	Baud rate		57.6 kbit/s / 115.2 kbit/s	
				Format		8,e,1 / 8,n,1	
Language selection						Deutsch / English / Español / Français / Italiano	page 48
Service		Status messages					page 49
		Diagnostics				Exclusively for service purposes by Leuze electronic	
		Expanded diagnostics				Exclusively for service purposes by Leuze electronic	