Leuze electronic

the sensor people

ODSL 30

Optical distance sensors

en 02-2014/08 50106655-01
We reserve the right to
make technical changes

TECHNICAL DESCRIPTION / SOFTWARE DESCRIPTION

ПРОМЭЛЕКТРОНИКА / sales@prom-elec.com

© 2014
Leuze electronic GmbH + Co. KG
In der Braike 1
D-73277 Owen / Germany
Phone: +49 7021 573-0
Fax: +49 7021 573-199
http://www.leuze.com
info@leuze.de

1 General information ... 4
1.1 Explanation of symbols ... 4
1.2 Important terms ... 4
1.3 Declaration of conformity ... 5
2 Safety ... 6
2.1 Proper use ... 6
2.2 Foreseeable misuse ... 7
2.3 Competent persons ... 7
2.4 Disclaimer ... 8
2.5 Laser safety notices ... 8
3 Description ODSL 30 ... 12
3.1 General description ... 12
3.2 Typical Areas of Application for the ODSL 30 ... 13
3.2.1 Continuous distance measurement ... 13
3.2.2 Positioning tasks ... 13
3.2.3 Collision protection ... 14
3.3 Mounting ... 15
3.4 ODSL 30 Variants ... 16
3.4.1 ODSL 30/V… with Analogue Output ... 17
3.4.2 ODSL 30/24… with three switching outputs ... 20
3.4.3 ODSL 30/D… with Serial Output ... 21
3.5 Operation with fieldbus and Ethernet ... 29
3.6 Operation ODSL 30 ... 30
3.6.1 LED indicators ODSL 30 ... 30
3.6.2 Switching on ... 31
3.6.3 Adjustment of the display contrast ... 31
3.6.4 Reset to factory settings ... 31
3.6.5 Querying the device software version ... 32
3.6.6 Referencing the device ... 32
3.7 Configuration ODSL 30 ... 33
3.7.1 Configuration / menu structure ODSL 30/V… (analogue) ... 34
3.7.2 Configuration / menu structure ODSL 30/24… (3 switching outputs) ... 36
3.7.3 Configuration / menu structure ODSL 30/D 232… (digital RS 232) ... 39
3.7.4 Configuration / menu structure ODSL 30/D 485… (digital RS 485) ... 42
3.7.5 Operating example ... 45
3.8 Advanced Menu (for software versions V01.10 and newer) ... 48
3.8.1 Setting an Offset/Preset Value - Compensating for Mounting Tolerances ... 48
3.8.2 Reduction in Measurement Time to as Little as 30ms ... 50
3.8.3 Changing the Display Resolution ... 51

4 Technical Data ODSL 30 ... 52
4.1 General specifications ... 52
4.2 Device-specific data ... 53
4.2.1 ODSL 30/V-30M-S12 ... 53
4.2.2 ODSL 30/24-30M-S12 ... 54
4.2.3 ODSL 30/D 232-30M-S12 ... 55
4.2.4 ODSL 30/D 485-30M-S12 ... 56
4.3 Dimensioned and connection drawings ... 57
5 Type overview and accessories ... 60
5.1 Type overview ... 60
5.2 Accessories ... 61
6 Installation ... 62
6.1 Storage, transportation ... 62
6.2 Mounting ... 62
6.3 Teach-in ... 63
7 Software ... 65
7.1 Connecting to a PC ... 65
7.1.1 Connection of the ODSL 30 to a PC ... 65
7.2 Installation of the ODS 96 configuration software ... 66
7.3 Starting the program ... 66
7.3.1 Description of the Menu Commands ... 68
7.3.2 Trade shows ... 69

Figure 2.1: Laser aperture, laser warning sign 10
Figure 2.2: Laser warning and information signs – supplied stick-on labels 11
Figure 3.1: Application example Positioning of Elevating Platforms 13
Figure 3.2: Application example "Collision Prevention" 14
Figure 3.3: ODSL 30 with BT 30 15
Figure 3.4: Dimensioned drawing BT 30 15
Figure 3.5: Characteristic output curve ODSL 30/V… with positive gradient 17
Figure 3.6: Characteristic output curve ODSL 30/V… with negative gradient 17
Figure 3.7: Behaviour of the switching outputs ODSL 30/24… (PNP output active high) 20
Figure 3.8: Serial transmission formats ODSL 30/D… 22
Figure 3.9: Voltage divider for the RS 485 bus termination 28
Figure 3.10: Indicator and operating elements ODSL 30 30
Figure 3.11: ODSL 30 measurement values with a uniqueness range of 9.8 m 51
Figure 4.1: Dimensioned drawing ODSL 30 variants 57
Figure 4.2: Electrical Connection ODSL 30/V… 58
Figure 4.3: Electrical Connection ODSL 30/24… 58
Figure 4.4: Electrical Connection ODSL 30/D 232… 58
Figure 4.5: Electrical Connection ODSL 30/D 485… 59
Table 5.1: ODSL 30 type overview 60
Table 5.2: Accessories ODSL 30 61
Figure 6.1: View through a chase 62
Figure 7.1: Connection of the ODSL 30 to a PC via the programming terminal UPG 5 65
Figure 7.2: Installation directory 66
Figure 7.3: Device selection 67
Figure 7.4: Start menu before measurement 67
Figure 7.5: Display of the current measurement values of the ODSL 30 connected 69

1 General information

1.1 Explanation of symbols

The symbols used in this technical description are explained below.

Attention

This symbol precedes text messages which must strictly be observed. Failure to comply with this information results in injuries to personnel or damage to the equipment.

Attention Laser Radiation

This symbol warns of possible danger caused by hazardous laser radiation.

Notice

This symbol indicates text passages containing important information.

1.2 Important terms

Phase measurement

Distance measuring procedure, which determines the distance of an object by the shift of the phase angle of the light reflected from the object.

Uniqueness range

Due to the periodicity of the sinusoid, the phasing of the signals received by the ODSL 30 limits the determination of unique measurement values to within a specific interval. The length of this interval is called the uniqueness range. A large uniqueness range is equivalent to high background suppression (see chapter 3.8.2).

Absolute measurement accuracy

Shows the possible divergence of the measurement value from the anticipated value through changes in the environmental conditions during the measuring process. Higher accuracy is given at constant environmental conditions.

Repeatability

Measuring distance change with repeated measurement at the same output signal (observe the same peripheral conditions as with resolution).

Resolution

The smallest possible distance change of the measurement object, which causes a definite change in the output signal.

Referencing

Device function of the ODSL 30… for the compensation of a possible temperature drift. A reference measurement should be carried out before each exact measurement. The reference measurement is activated via a separate device input and is automatically carried out once after the device is switched on.

Diffuse reflection

Return and/or degree of reflection of the radiated light.

Measurement time

The measurement time is dependent on the selected uniqueness range and the luminosity coefficient of the object (see chapter 3.8.2).

Delay before start-up

The delay before start-up indicates the point in time when the first valid measurement can be obtained after switching on.

Light switching/Dark switching

Specifies the behaviour of the switching output: light switching if an object is located within the configured distance range, dark switching if an object is located outside of the configured distance range.

Insensitivity towards ambient light

Indicates the insensitivity of the measurement result towards ambient light. The ODSL 30 is reliably measuring even with extraneous light intensity of 5 kLux. Typical light intensity in a work place is only 1 kLux.

1.3 Declaration of conformity

The optical distance sensors of the ODSL 30 series have been manufactured observing current European standards and guidelines.

Notice

A corresponding Declaration of Conformity can be requested from the manufacturer.

The manufacturer of the product, Leuze electronic GmbH + Co. KG in D-73277 Owen, possesses a certified quality assurance system in accordance with ISO 9001.

CE C UL US LISTED CDRH

2 Safety

This sensor was developed, manufactured and tested in line with the applicable safety standards. It corresponds to the state of the art.

2.1 Proper use

Optical distance sensors of the ODSL 30 series are intelligent, configurable sensors for the optical, contactless measurement of the distance to objects.

Areas of application

The optical distance sensors of the ODSL 30 series have been designed for the following areas of application:

- distance measurement
- contour determination
- positioning of side-tracking skates, cranes, lifting devices
- filling level measurement

CAUTION

Observe intended use!

- Only operate the device in accordance with its intended use.
  The protection of personnel and the device cannot be guaranteed if the device is operated in a manner not complying with its intended use.
  Leuze electronic GmbH + Co. KG is not liable for damages caused by improper use.
- Read the technical description before commissioning the device.
  Knowledge of this technical description is an element of proper use.

NOTE

Comply with conditions and regulations!

- Observe the locally applicable legal regulations and the rules of the employer's liability insurance association.

Attention

For UL applications, use is only permitted in class 2 circuits in accordance with the NEC (National Electric Code).

2.2 Foreseeable misuse

Any use other than that defined under the "Approved purpose" or which goes beyond that use is considered improper use.

In particular, use of the device is not permitted in the following cases:

- rooms with explosive atmospheres
- in circuits which are relevant to safety
- operation for medical purposes

NOTE
Do not modify or otherwise interfere with the device. Do not carry out modifications or otherwise interfere with the device. The device must not be tampered with and must not be changed in any way. The device must not be opened. There are no user-serviceable parts inside. Repairs must only be performed by Leuze electronic GmbH + Co. KG.

2.3 Competent persons

Connection, mounting, commissioning and adjustment of the device must only be carried out by competent persons.

Prerequisites for competent persons:

- They have a suitable technical education.
- They are familiar with the rules and regulations for occupational safety and safety at work.
- They are familiar with the technical description of the device.
- They have been instructed by the responsible person on the mounting and operation of the device.

Certified electricians

Electrical work must be carried out by a certified electrician.

Due to their technical training, knowledge and experience as well as their familiarity with relevant standards and regulations, certified electricians are able to perform work on electrical systems and independently detect possible hazards.

In Germany, certified electricians must fulfill the requirements of accident-prevention regulations BGV A3 (e.g. electrician foreman). In other countries, there are respective regulations that must be observed.

2.4 Disclaimer

Leuze electronic GmbH + Co. KG is not liable in the following cases:

- The device is not being used properly.
- Reasonably foreseeable misuse is not taken into account.
- Mounting and electrical connection are not properly performed.
- Changes (e.g., constructional) are made to the device.

2.5 Laser safety notices

ATTENTION, LASER RADIATION – LASER CLASS 2

Never look directly into the beam!

The device fulfills the EN 60825-1:2008-05 (IEC 60825-1:2007) safety regulations for a product in **laser class 2** as well as the U.S. 21 CFR 1040.10 regulations with deviations corresponding to "Laser Notice No. 50" from June 24th, 2007.

- Never look directly into the laser beam or in the direction of reflecting laser beams!
  If you look into the beam path over a longer time period, there is a risk of injury to the retina.
- Do not point the laser beam of the device at persons!
- Intercept the laser beam with an opaque, non-reflective object if the laser beam is accidentally directed towards a person.
- When mounting and aligning the device, avoid reflections of the laser beam off reflective surfaces!
- CAUTION! The use of operating or adjusting devices other than those specified here or carrying out of differing procedures may lead to dangerous exposure to radiation.
  The use of optical instruments or devices (e.g., magnifying glasses, binoculars) with the product will increase eye hazard.
- Adhere to the applicable legal and local regulations regarding protection from laser beams acc. to EN 60825 (IEC 60825) in its latest version.
- The device must not be tampered with and must not be changed in any way.
  There are no user-serviceable parts inside the device.
  Repairs must only be performed by Leuze electronic GmbH + Co. KG.

NOTE

Affix laser information and warning signs!

Laser information and warning signs are attached to the device (see figure 2.1). Also included with the device are self-adhesive laser warning and laser information signs (stick-on labels) in multiple languages (see figure 2.2).

- Affix the laser information sheet with the language appropriate for the place of use to the device.

  When using the device in the US, use the stick-on label with the "Complies with 21 CFR 1040.10" notice.
- Affix the laser information and warning signs near the device if no signs are attached to the device (e.g. because the device is too small) or if the attached laser information and warning signs are concealed due to the installation position.

  Affix the laser information and warning signs so that they are legible without exposing the reader to the laser radiation of the device or other optical radiation.

A Laser exit opening
B Laser warning sign

Figure 2.1: Laser aperture, laser warning sign

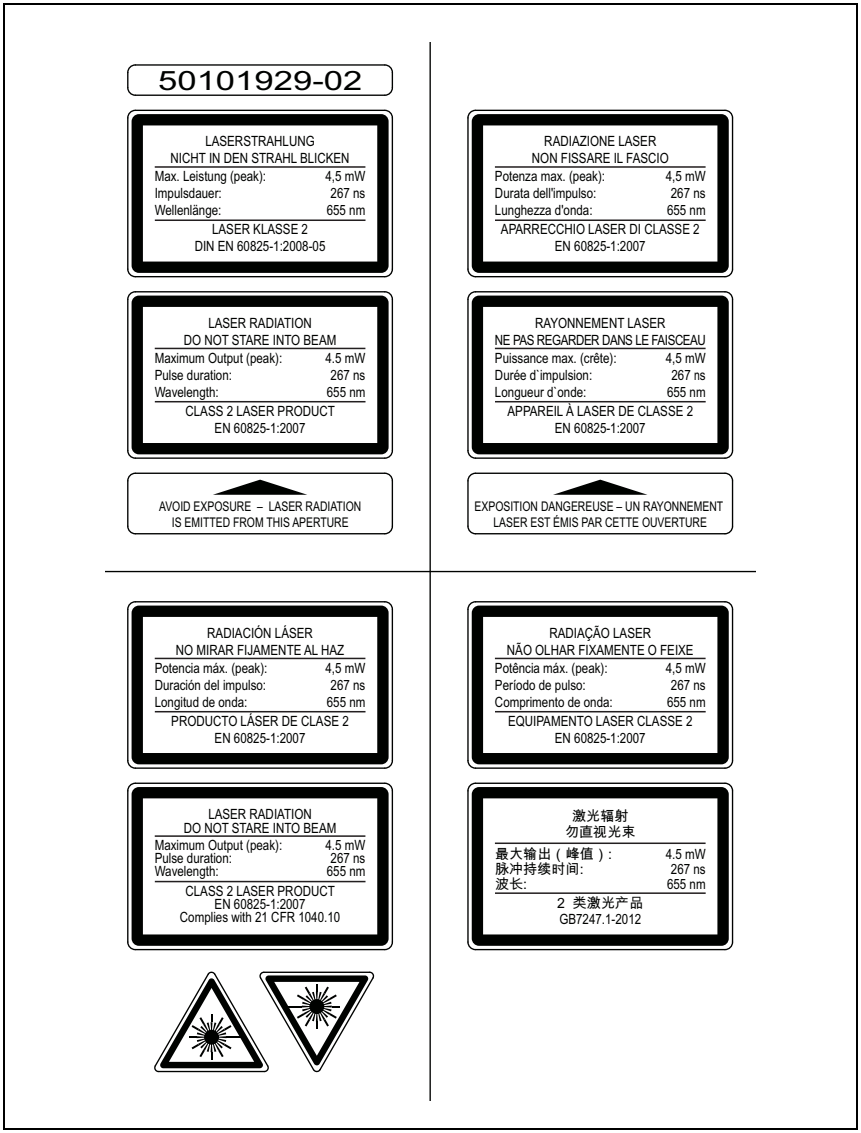

Figure 2.2: Laser warning and information signs – supplied stick-on labels

3 Description ODSL 30

3.1 General description

The ODSL 30 is a lase distance sensor with an extensive area of application. The equipment is available in different versions with analogue outputs, digital outputs, or switching outputs. The distance measurement uses the phase measurement principle. The measurement[1)] range lies between 0.2 … 30m.

Integrated in the device are a keypad and a two-line LC display which can be used to configure the ODSL 30. During measurement operation, the display shows the current measurement value. The switching point of the switching outputs can easily be set via a teach input on all variants.

Remarks

Moving objects into the measurement beam from the side may lead to incorrect measurement values.

By carrying out the integrated reference measurement function before a measurement, the sensor's accuracy can be improved. To achieve this, the active input (Pin 2) can be configured via the menu to act either as an activation input with referencing, or as a pure referencing input. While the referencing function is carried out (duration about 0.3s), no measurement can be taken.

If the device is used in areas subject to electrostatic charges, it is recommended to connect the housing of the ODSL 30 to a common potential.

Accessories

The ODSL 30 ships with the mounting device BT 30 for easy mounting and alignment (further accessories see chapter 5.2).

1) Luminosity coefficient 6 … 90% throughout the entire temperature range, measurement object ≥ 50 x 50mm^2.
ODSL 30/D…Measurement range up to 65m, luminosity coefficient 50 … 90%

3.2 Typical Areas of Application for the ODSL 30

3.2.1 Continuous distance measurement

All ODSL 30 variants with analogue/digital or switching output can be used for continuous distance measuring. The menu-guided configuration via keypad and LC display on the device without additional software permits the adaptation to a large number of applications.

Depending on position or settings of the ODSL 30, various applications are possible:

- Positioning of side-tracking skates, cranes, lifting devices
- Contour determination through controlled passing movement of an object through the beam of the ODSL 30.
- Volume measuring by taking measurements on two levels during the concurrent movement of the object.
- Determination of the diameter, e.g., on paper rolls.
- Measuring the thickness of planks with two opposing sensors and a differential of the two measured values.

3.2.2 Positioning tasks

The ODSL 30 variants with analogue output and/or up to three teachable switching outputs are ideally suited for basic positioning tasks, such as the height/level adjustment of elevating platforms and rising floors.

The ODSL 30 is mounted in a way to enable positioning in the direction of the measuring beam.

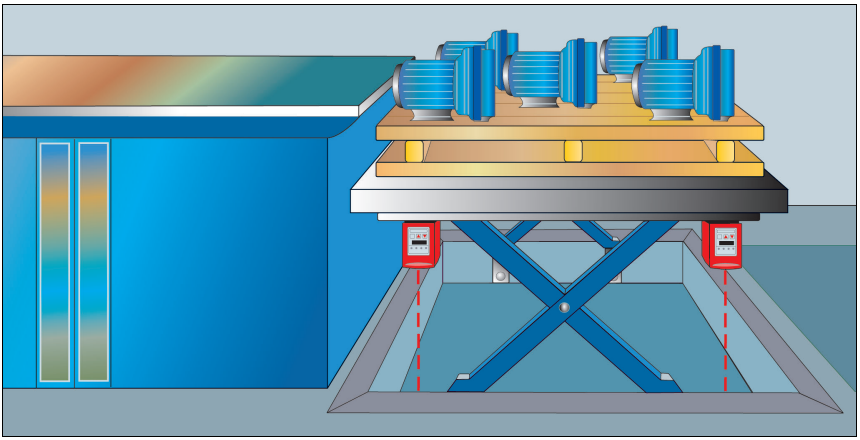

Figure 3.1: Application example Positioning of Elevating Platforms

3.2.3 Collision protection

The ODSL 30 is ideally suited to be used as collision prevention device:

- Distance regulation via the analogue output of the ODSL 30
- Collision prevention via the switching outputs of the ODSL 30

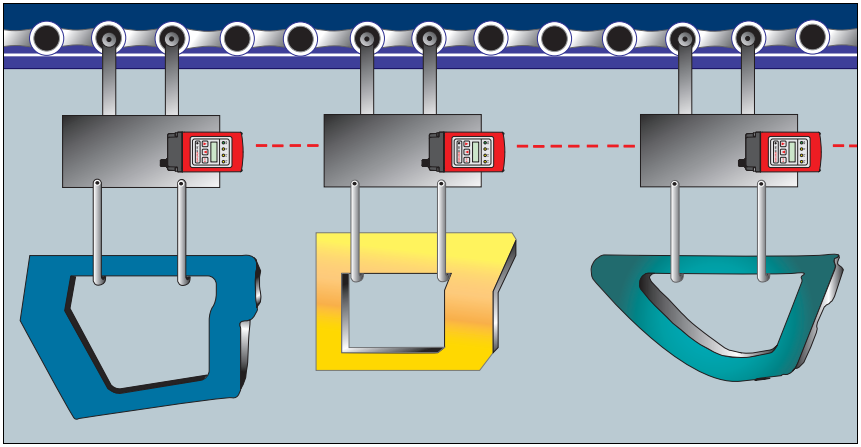

Figure 3.2: Application example "Collision Prevention"

3.3 Mounting

The ODSL 30 ships with the mounting device BT 30 that permits the easy mounting and alignment of the ODSL 30.

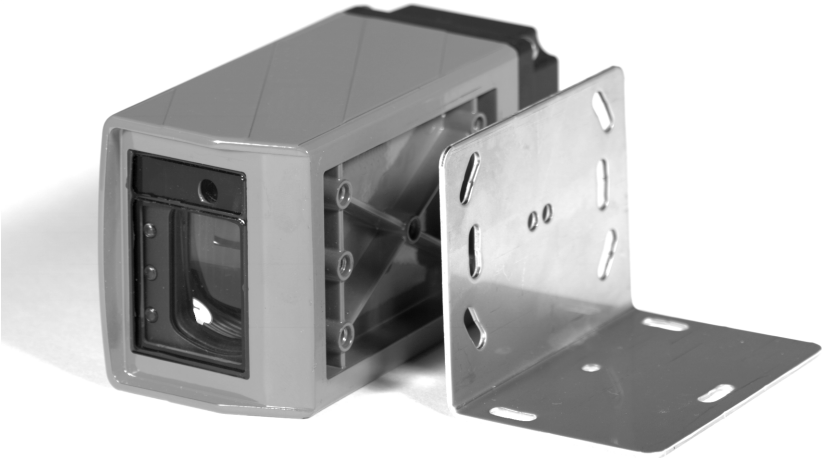

Figure 3.3: ODSL 30 with BT 30

Dimensioned drawing BT 30

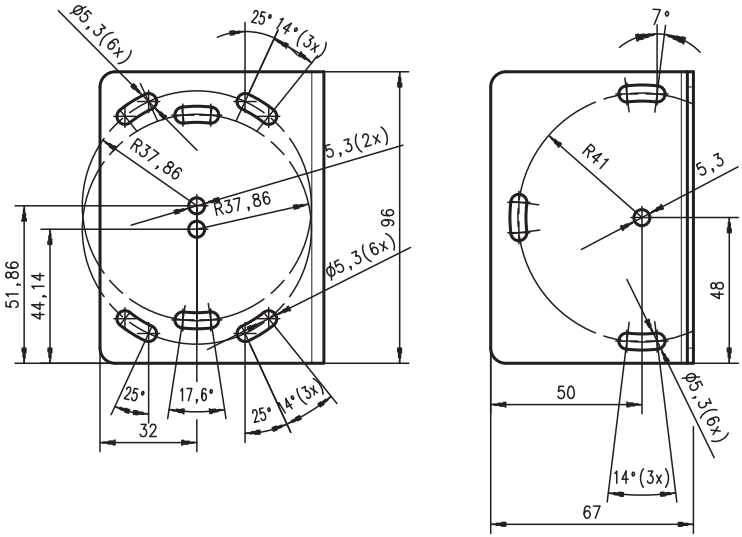

Figure 3.4: Dimensioned drawing BT 30

Notice

With the help of the two aiming notches on the upper side of the device, you can carry out a coarse alignment of the ODSL 30 even before commissioning.

3.4 ODSL 30 Variants

Model variations

The ODSL 30 is available in four variants:

- as a **laser distance sensor** with **2 analogue outputs 1 … 10 V and 4 … 20 mA** and **1 universally configurable switching output**
  measurement range between 0.2 … 30 m
- as a **laser distance sensor** with **3 universally configurable switching outputs**
  measurement range between 0.2 … 30 m
- as a **laser distance sensor** with **serial interface RS 232**
  and **2 universally configurable switching outputs**,
  measurement range between 0.2 … 30 m
- as a **laser distance sensor** with **serial interface RS 485/RS 422**
  and **2 universally configurable switching outputs**,
  measurement range between 0.2 … 30 m

3.4.1 ODSL 30/V… with Analogue Output

Analogue Output ODSL 30/V…

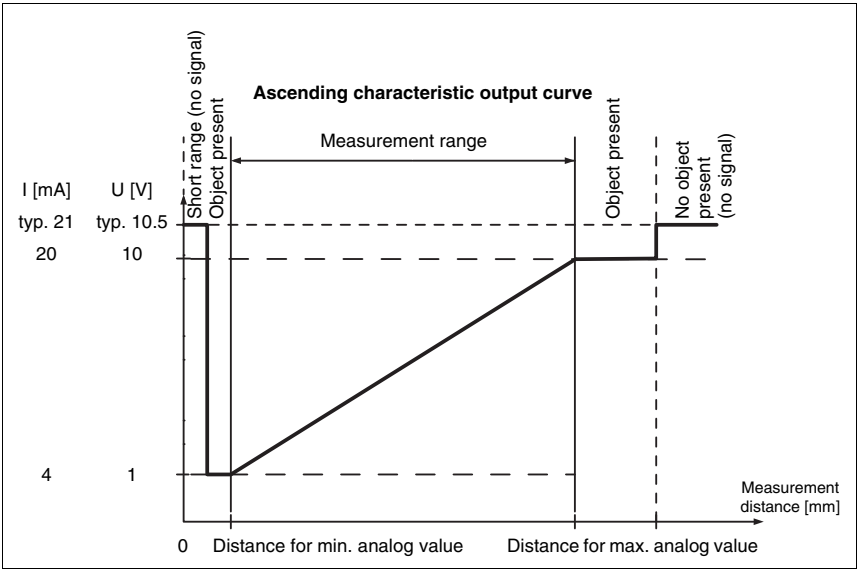

Figure 3.5: Characteristic output curve ODSL 30/V… with positive gradient

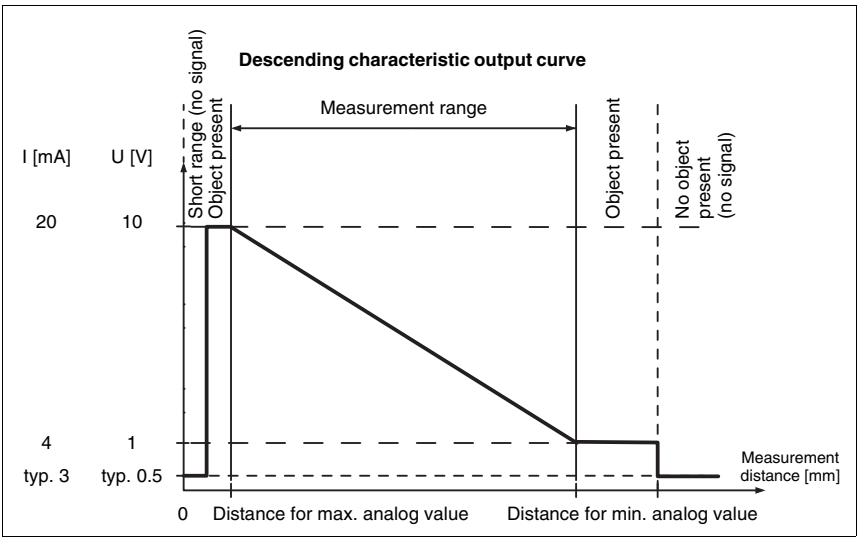

Figure 3.6: Characteristic output curve ODSL 30/V… with negative gradient

Behaviour of the analogue outputs of the ODSL 30/V…

The ODSL 30/V… has an analogue output with linear behaviour. A current output (4 … 20mA) and a voltage output (1 … 10V) are available to the user. In order to achieve the highest resolution possible, the range of the analog output should be set as small as the application allows. The analogue output can be adjusted within the measurement range by configuration via the keypad and LC display (adaptation of the characteristic output curve). The parameter `Cal. Ana. Output` determines whether the calibration is to be carried out for the current or voltage output. The characteristic output curve can be configured with a positive or negative gradient. For this purpose, the two distance values `Pos for min. val` and `Pos for max. val` for the minimum and maximum analogue output value are set accordingly in the range between 200mm and 30,000mm (see figure 3.5 and figure 3.6).

Object distance	Current output[1)]		Voltage output[2)]	
	with positive gradient	with negative gradient	with positive gradient	with negative gradient
no object or object too close or too far away (no signal)	> 20.5mA (typ. 21mA)	< 3.5mA (typ. 3mA)	> 10.25V (typ. 10.5V)	< 0.75V (typ. 0.5V)
= distance for minimum analogue value	4mA	20mA	1V	10V
= distance for maximum analogue value	20mA	4mA	10V	1V
< distance for minimum analogue value	4mA	20mA	1V	10V
> distance for maximum analogue value	20mA	4mA	10V	1V

1) The typical values only apply if the current output is calibrated.
2) The typical values only apply if the voltage output is calibrated.

Teach-in of the characteristic output curve

In addition to the edge-controlled teach-in (`slope control`) of the switching outputs, teach-in of the characteristic output curve is also possible via a teach line for devices with software version V01.10 and newer (see chapter 3.6.5). The following steps are required for the line teach-in of the analogue characteristic curve:

1. Activation of the analogue line teach function via the keypad and menu.
   Activate `Input Menu` -> `Teach Mode` -> `Teach Mode time control`.
2. Position measurement object at the desired measurement distance.
3. The respective teach function is activated by applying the active level (default $+U_B$) to the teach input "Teach Q1" (pin 5). The teach event is indicated by the flashing of the LEDs and on the display.

Teach function	Duration of teach signal	Green LED	Yellow LED
Upper switching point switching output Q1	2 … 4s	flash synchronously	
Distance value for analogue output 1V / 4mA	4 … 6s	continuous light	flashing
Distance value for analogue output 10V / 20mA	6 … 8s	flashing	continuous light

4. To finish the teach event, disconnect the teach input from the teach signal after the desired time.
5. A successful teach event is signaled by the end of the flashing of the LEDs. The menu entries can be used to check that the teach values are properly accepted and to make any changes.

Error messages

Rapid flashing of the green LED following a teach event indicates an unsuccessful teach event. The sensor remains ready for operation and continues to function with the old values.

Remedy:

- Repeat teach event **or**
- Activate teach input for more than 8 s **or**
- Disconnect sensor from voltage to restore the old values.

Behaviour of the switching output of the ODSL 30/V…

Additionally, a switching output with two switching points (switching window) is available with the ODSL 30/V… with analogue output. The upper switching point can be taught using a teach line. By configuring within the measurement range, it is possible to set the lower and upper switching points, the switching hysteresis, the switching behavior (light/dark switching), and the type of switching output (PNP high active or NPN low active or PNP/NPN push-pull).

Teaching always takes place towards the upper switching point (see figure 3.7 on page 20). The lower switching point is set to the value '199' by default and can be adjusted via the operating menu. The following table applies for a lower switching point of 199 mm.

Object distance	Light switching output Q1	Dark switching output Q1
No object (no signal)	off	on
< 200 mm[1)]	on	off
< teach value	on	off
> teach value	off	on

1) Only if a received signal is available that can still be evaluated, otherwise same as "no object"

3.4.2 ODSL 30/24… with three switching outputs

Switching outputs ODSL 30/24…

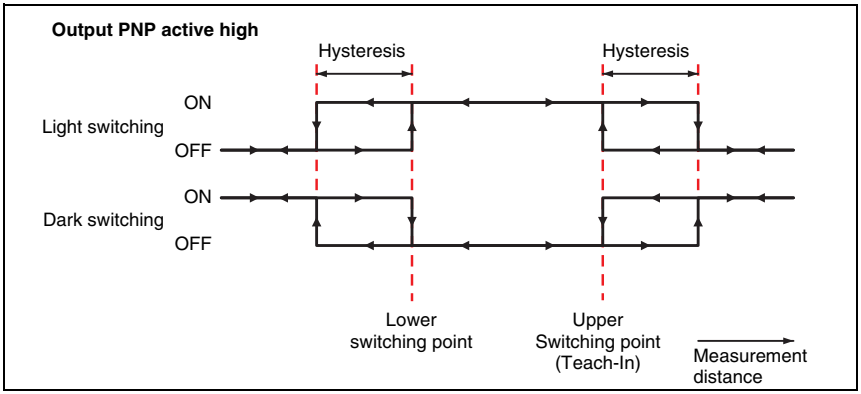

Figure 3.7: Behaviour of the switching outputs ODSL 30/24… (PNP output active high)

Behaviour of the switching outputs of the ODSL 30/24…

The ODSL 30/24… is equipped with three independent switching outputs, each with 2 switching points (switching windows). The upper switching points can be taught using a teach line. By configuring within the measurement range, it is possible to set the lower and upper switching points, the switching hysteresis, the switching behavior (light/dark switching), and the type of switching output (PNP high active or NPN low active or PNP/NPN push-pull).

Teaching always takes place towards the upper switching point (see figure 3.7). Each of the lower switching points is set to the value '199' by default and can be adjusted via the operating menu. The following table applies for a lower switching point of 199 mm.

Object distance	Light switching			Dark switching		
	output Q1	output Q2	output Q3	output Q1	output Q2	output Q3
No object (no signal)	off	off	off	On	On	On
< 200 mm[1)]	On	On	On	off	off	off
< teach value	On	On	On	off	off	off
> teach value	off	off	off	On	On	On

1) Only if a received signal is available that can still be evaluated, otherwise same as "no object"

3.4.3 ODSL 30/D… with Serial Output

Transmission formats

The ODSL 30/D… has 2 digital switching outputs and one serial interface which is implemented either as an RS 232 interface or as an RS 485/RS 422 interface. The transmission rate can be set to between 600 and 115200 baud.

The serial transmission is carried out with 1 start bit, 8 data bits and 1 or 2 stop bits without parity.

For the transmission of the measurement values, 6 different transmission modes may be configured (see figure 3.8):

- **ASCII measurement value** (6 bytes, measurement range 0 … 65 m, resolution 1 mm)[1)]
- **ASCII measurement value 0.1 mm** (7 bytes, measurement range 0 … 65 m, resolution 0.1 mm) [1)]
- **14 bit measurement value** (2 bytes, measurement range 0 … 16 m, resolution 1 mm) [1)]
- **16 bit measurement value** (3 bytes, measurement range 0 … 65 m, resolution 1 mm) [1)]
- **20 bit measurement value** (4 bytes, measurement range 0 … 65 m, resolution 0.1 mm) [1)]
- **Remote Control Operation** (Remote Control) [2)]

The output format is activated by configuration with the keypad and menu.

Notice!

Selecting an output resolution of 0.1 mm does not change the internal measurement system of the ODSL 30 and does not increase its accuracy. For this reason, measurement values with a resolution of 0.1 mm may vary in successive measurements depending on the application.

1) Continuous measured value output in a 100 ms grid. For the ODSL 30/D 485…, the transfer is carried out in RS 422 mode, i.e., with permanent transmission on the Tx+ and Tx- lines.

2) For the ODSL 30/D 485…, the transfer is carried out in RS 485 mode, i.e., the Tx+ and Tx- lines are switched to receive. This permits several ODSL 30/D 485… to be connected onto a single bus. In this case, the device addresses of the individual devices must differ from each other.
The ODSL 30/D 232… can also be operated via remote control, however, only as a point-to-point-connection between the ODSL 30 and the controller.

Measurement value ASCII transmission

Transmission format: **MMMMM<CR>**

MMMMM = 5-digit measurement value

<CR> = ASCII character "Carriage Return" (x0D)

Measurement value ASCII transmission, resolution 0.1 mm

Transmission format: **MMMMMM<CR>**

MMMMMM = 6-digit measurement value in tenths of a mm without decimal point

<CR> = ASCII character "Carriage Return" (x0D)

Measurement value = 14 bits (measurement range 0 … 15 m, resolution 1 mm)

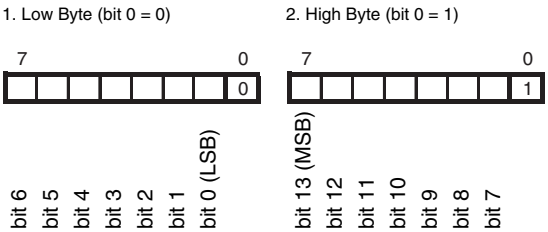

Measurement value = 16 bits (measurement range 0 … 30 m, resolution 1 mm)

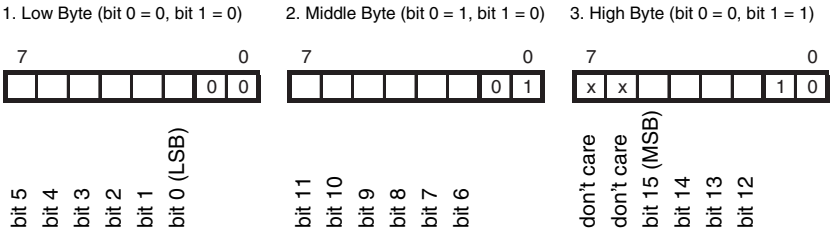

Measurement value = 20 bits (measurement range 0 … 30 m, resolution 0.1 mm)

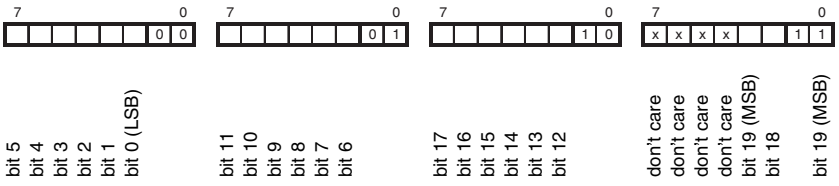

Remote control operation

ASCII transfer of the measurement value on request
4 digits (4 bytes), **5 digits** (5 bytes) **or 6 digits** (6 bytes).

Figure 3.8: Serial transmission formats ODSL 30/D…

Measurement value output for various transmission types

Object distance	Measurement value output for transmission type							
	ASCII 5 bytes	**ASCII 6 bytes**	**14 bit**	**16 bit**	**20 bit**	**Remote 4 bytes**	**Remote 5 bytes**	**Remote 6 bytes**
No object (no signal)	65535	655350	16383	65535	655350	9999	65535	655350
< 200mm[1)]	Distance value in mm	Distance value in 1/10mm	Distance value in mm	Distance value in mm	Distance value in 1/10mm	Distance value in mm	Distance value in mm	Distance value in 1/10mm
200mm … 9900mm	Distance value in mm	Distance value in 1/10mm	Distance value in mm	Distance value in mm	Distance value in 1/10mm	Distance value in mm	Distance value in mm	Distance value in 1/10mm
9901mm … 16000mm	Distance value in mm	Distance value in 1/10mm	Distance value in mm	Distance value in mm	Distance value in 1/10mm	9901	Distance value in mm	Distance value in 1/10mm
16001mm … 65000mm	Distance value in mm	Distance value in 1/10mm	16001	Distance value in mm	Distance value in 1/10mm	9901	Distance value in mm	Distance value in 1/10mm
> 65000mm	65001	650010	16001	65001	650010	9901	65001	650010
Object distance + Offset > 65000mm (Offset Direction neg.)	65001	650010	16001	65001	650010	9901	65001	650010
Object distance - Offset < 0mm (Offset Direction pos.)	0	0	0	0	0	0	0	0
Device error	0	0	0	0	0	0	0	0

1) Only if a received signal is available that can still be evaluated, otherwise same as "no object"

Commands for remote control operation

For remote control operation (parameter `Remote Control`), a device address between 0 … 14 can be set. In this operating mode, the ODSL 30/D… reacts only to commands from the controller.

With **asynchronous measurement**, the sensor measures continuously. After processing the command, the next measurement value of the ODSL 30 is transmitted. The response time of the ODSL 30 varies within the scope of the measurement time and is dependent on the time of the query and the state of the internal measurement cycle of the ODSL 30 at this time.

With **synchronous measurement**, the measurement starts with processing of the current command. The response time of the ODSL 30 is constant and is dependent only on the configured measurement time.

The following control commands are available:

Commands for the asynchronous measurement

Measurement value query, 4 digits:

	Byte no. 0	1	2	3	4	5	6	7	8	Response time
Command	Sensor address 0x00 through 0x0E	–	–	–	–	–	–	–	–	
Sensor response	"*" (0x2A)	ASCII address tens	ASCII address ones	ASCII distance measurement value 1'000's	100's	tens	ones	"#" (0x23)	–	max. 120 ms

Asynchronous measurement value query 5 digits, resolution 1 mm:

	Byte no. 0	1	2	3	4	5	6	7	8	Response time
Command	"*" (0x2A)	ASCII address "0…9"; "A…D"	"M" (0x4D)	"#" (0x23)	–	–	–	–	–	
Sensor response	"*" (0x2A)	ASCII address "0…9"; "A…D"	ASCII distance measurement value 10'000's	1'000's	100's	tens	ones	State	"#" (0x23)	max. 120 ms

Asynchronous measurement value query 6 digits, resolution 0.1 mm:

	Byte no. 0	1	2	3	4	5	6	7	8	9	Response time
Command	"*" (0x2A)	ASCII address "0…9", "A…D"	"m" (0x73)	"#" (0x23)	–	–	–	–	–	–	
Sensor response	"*" (0x2A)	ASCII address "0…9"; "A…D"	ASCII distance measurement value 10'000's	1'000's	100's	tens	ones	tenths	State	"#" (0x23)	max. 120 ms

Commands for the synchronous measurement

The two following synchronous measurement commands **"S"** (5-digit measurement value, resolution 1 mm) or **"s"** (6-digit measurement value, resolution 0.1 mm) enable the start of a measurement at a precise time.

If a synchronous measurement value is requested via remote control operation:

- this command immediately switches on the laser and triggers the measurement.
- following the measurement cycle, the laser is switched off.
- the measured value is transmitted following this measurement cycle.

Notice!

Prerequisite for the function of the synchronous measurement value query is that the sensor be deactivated (laser off)!

For this purpose:

- the active/reference input (pin 2) must be connected to the inactive state (default: 0V) or it must be open.
- the active/reference input (pin 2) must be configured as an activation and referencing input:
  Input Menu -> Input activ/ref -> input activ/ref Activation + Ref

Synchronous measurement value query 5 digits, resolution 1mm:

	Byte no.										Response time [1]
	0	1	2	3	4	5	6	7	8	9	
Command	"*" (0x2A)	ASCII address "0…9", "A…D"	"S" (0x53)	"#" (0x23)	–	–	–	–	–	–	
Sensor response	"*" (0x2A)	ASCII address "0…9", "A…D"	ASCII distance measurement value					State	"#" (0x23)	–	30 … 100ms
			10'000's	1'000's	100's	tens	ones				

Synchronous measurement value query 6 digits, resolution 0.1mm:

	Byte no.										Response time [1]
	0	1	2	3	4	5	6	7	8	9	
Command	"*" (0x2A)	ASCII address "0…9", "A…D"	"S" (0x73)	"#" (0x23)	–	–	–	–	–	–	
Sensor response	"*" (0x2A)	ASCII address "0…9", "A…D"	ASCII distance measurement value						State	"#" (0x23)	30 … 100ms
			10'000's	1'000's	100's	tens	ones	tenths			

1) Depending on the configuration of the measurement time, see chapter 3.8 "Advanced Menu (for software versions V01.10 and newer)", duration of data transmission not included.

Notice!

To make the laser beam visible for adjustment purposes and to view measurement values on the display, the

- *active/reference input (pin 2) can be connected to the active state (default: 24V) or*
- *the sensor can be activated with the command "A" (see page 26) or*
- *the active/reference input (pin 2) can be temporarily configured via the menu as a reference input:*
  Input Menu -> Input activ/ref -> Input activ/ref Referencing

Possible errors and their causes

Instead of a synchronous measurement, an asynchronous measurement is performed. Possible causes of the error: the synchronous measurement command was set by the activated, i.e. the measuring, sensor. Instead of the synchronous measurement, an asynchronous measurement was performed (corresponds to the commands "**M**" and "**m**").

Further commands

Activate referencing:

	Byte no.									Response time
	0	1	2	3	4	5	6	7	8	
Command	"*" (0x2A)	ASCII address "0…9", "A…D"	"R" (0x52)	"#" (0x23)	–	–	–	–	–	
Sensor response	"*" (0x2A)	ASCII address "0…9", "A…D"	State	"#" (0x23)	–	–	–	–	–	350ms

Activate sensor[1)]:

	Byte no.									Response time
	0	1	2	3	4	5	6	7	8	
Command	"*" (0x2A)	ASCII address "0…9", "A…D"	"A" (0x41)	"#" (0x23)	–	–	–	–	–	
Sensor response	"*" (0x2A)	ASCII address "0…9", "A…D"	State	"#" (0x23)	–	–	–	–	–	max. 120ms

Deactivate sensor[1)]:

	Byte no.									Response time
	0	1	2	3	4	5	6	7	8	
Command	"*" (0x2A)	ASCII address "0…9", "A…D"	"D" (0x44)	"#" (0x23)	–	–	–	–	–	
Sensor response	"*" (0x2A)	ASCII address "0…9", "A…D"	State	"#" (0x23)	–	–	–	–	–	max. 120ms

Status byte (bitwise processing):

Bit number	Value	Meaning
7 (MSB)	0x80	always = 0 (reserved)
6	0x40	1 = other error, 0 = OK
5	0x20	always = 1, if the status is 0x20, the sensor functions flawlessly
4	0x10	always = 0 (reserved)
3	0x08	always = 0 (reserved)
2	0x04	1 = sensor deactivated, 0 = sensor activated
1	0x02	1 = no signal or signal too low, 0 = signal OK
0 (LSB)	0x01	1 = laser defective, 0 = Laser OK

1) The sensor is activated by default and in this case cannot be deactivated via the control command. The control command is only effective if the input activ/ref is configured as an activation and referencing input. In this case, the following applies: The sensor is activated if the input activ/ref is at active level **or** if the sensor is activated via control command. The sensor is deactivated if the input activ/ref is not at active level **and** the sensor is deactivated via control command.

Behaviour of the switching outputs of the ODSL 30/D…

In addition, the ODSL 30/D… with serial output also has two switching outputs. The position within the measuring range at which the switching outputs become active can be set arbitrarily via a teach line or via configuration. In addition to the switching points, it is also possible to configure the switching hysteresis, the switching behaviour (light/dark switching), and the type of switching output (PNP high active or NPN low active or PNP/NPN push-pull).

Teaching always takes place towards the upper switching point (see figure 3.7 on page 20). The lower switching point is set to the value '199' by default and can be adjusted via the operating menu. The following table applies for a lower switching point of 199 mm.

Object distance	Light switching		Dark switching	
	output Q1	output Q2	output Q1	output Q2
No object (no signal)	off	off	on	on
< 200 mm[1)]	on	on	off	off
< teach value	on	on	off	off
> teach value	off	off	on	on

1) Only if a received signal is available that can still be evaluated, otherwise same as "no object"

Notes regarding the termination of the data lines of the ODSL 30/D 485…

The ODSL 30/D 485… features a combined transmitter and receiver component that can transmit serial data according to the RS 485 and RS 422 standard (see TIA/EIA-485-A or DIN66259, Part 3).

These standards define some basic rules that should be followed in order to achieve the most reliable data transmission:

- The data lines A and B (which correspond to the ODSL 30 pins Tx+ and Tx-) are connected to an intrinsic impedance of $Z_0 \approx 120\Omega$ via a 2-wire twisted pair cable.
- The end of the data line (and the beginning in case of RS 485) is terminated using a 120 Ω resistor. The ODSL 30/D 485… does not have an internal bus termination.
- The RS 485 bus participants are wired in an in-line bus topology, i.e., the data line is fed from one bus participant to the next. Cable stubs are to be avoided or to be kept as short as possible.
- The RS 485 specification assumes an inactive potential difference of $U_{AB} \geq 200$ mV between the data lines. A bus termination in the form of a voltage divider should be implemented in order to maintain this level. Usually, it is connected to the RS 485 coupling module of the PLC.

The RS 485 specification permits transmission rates in the megabit range for up to 32 participants. The ODSL 30/D 485… is designed for a data transmission rate of typically 9600 Baud (600 … 115200 Baud may be configured). In practice, this means that the strict requirements regarding the bus termination and the cabling are "softened" for a few bus participants.

However, it is important to maintain the bus idle levels ($U_{AB} \geq 200\,mV$). If the PLC coupling module does not include a bus termination with voltage divider, the following circuit may be used.

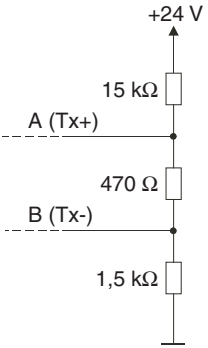

Figure 3.9: Voltage divider for the RS 485 bus termination

The RS 422 connection does not require a bus termination for cable lengths up to about 20 m and data transmission rates less than 9600 Baud.

Further information:

- RS 422: Electrical Specification acc. to DIN 66259, Part 3
- ISO 8482: Abstract
  Specifies the physical medium characteristics for twisted pair multipoint interconnections in either 2-wire or 4-wire network topology, a binary and bi-directional signal transfer, the electrical and mechanical design of the endpoint system branch cables and the common trunk cable which may be up to 1200 m in length, the component measurements of the integrated type generators and receivers within the endpoint system, the applicable data signaling rate up to 12.5 Mbit/s.

3.5 Operation with fieldbus and Ethernet

Sensors ODSL 30/D232-30M-S12 with an RS 232 serial interface can be connected with MA 2xxi modular interfacing units to the following fieldbus and Ethernet types:

- PROFIBUS DP –> **MA 204***i*
- Ethernet TCP/IP –> **MA 208***i*
- CANopen –> **MA 235***i*
- EtherCAT –> **MA 238***i*
- PROFINET-IO –> **MA 248***i*
- DeviceNet –> **MA 255***i*
- EtherNet/IP –> **MA 258***i*

To do this, the modular interfacing unit is connected to the sensor via a connection cable. To operate the distance sensors, rotary switch **S4** of the modular interfacing unit must be set to switch position **B**.

Further details can be found in the technical descriptions of the modular interfacing units.

Notice

The default settings of the ODSL 30/D232… serial interface have to be adjusted. For additional information on configuring the interface, refer to chapter 3.7.3.

Specifications for the serial interface

COM function:	**ASCII**	(see page 41)
Baud rate:	**38400 baud**	(see page 41)

3.6 Operation ODSL 30

Indicator and operating elements

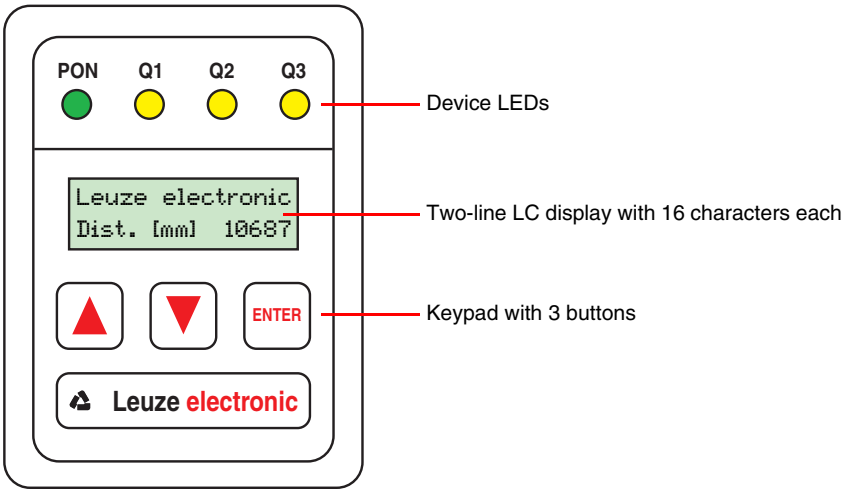

Figure 3.10:Indicator and operating elements ODSL 30

3.6.1 LED indicators ODSL 30

LED	Color	Display when	
		Sensor operation	**activated teach-in characteristic output curve** [1]
PON	**green, continuous light**	ready	teach event
	green, flashing	–	teach event
	green off	no voltage	
Q1, Q2, Q3	**yellow, continuous light**	object inside teach-in measurement distance	teach event
	yellow flashing	–	teach event
	yellow off	object outside teach-in measurement distance or no signal present	

1) The teach-in process is described in detail in section 3.4.1 and section 6.3

Notice

The 3 yellow LEDs Q1, Q2 and Q3 for the status display of the up to 3 switching outputs are additionally located in the optical window of the ODSL 30. Only the LEDs for those switching outputs that are actually available in the respective device version have a function.

3.6.2 Switching on

After power-on and error-free initialization of the device, the green LED **PON** lights up continuously, the ODSL 30 is measurement mode. The display lighting remains switched off.

```
Leuze  electronic
Dist. [mm]   10687
```

In measurement mode, the LC display shows the current measurement value in millimetres. If no object is detected or if the signal is too weak, the notice NO SIGNAL appears on the display.

Notice

After an operating time of 30 min., the device has reached the operating temperature required for an optimal measurement and should be referenced then.

3.6.3 Adjustment of the display contrast

While switching the device on, press both arrow keys of the ODSL 30 simultaneously.

```
contrast: 160
```

After releasing the keys, you can decrease or increase the contrast of the LC display with the arrow keys (value range 0 … 255). By pressing ENTER, the adjusted contrast value is applied and you get to the configuration menu of the ODSL 30.

3.6.4 Reset to factory settings

By pressing ENTER while switching the device on, you can reset the configuration of the ODSL 30 to the factory settings.

A safety prompt appears.

```
Default Setting?
Press ↵ for OK
```

By pressing ENTER again, all parameters are reset to factory settings. All settings made previously are permanently lost. By pressing an arrow key, the ODSL 30 returns to measurement operation without resetting the parameters.

3.6.5 Querying the device software version

You can query the device software version in the menu for configuring the ODSL 30. To do this, select the following menu item in the `Service Menu`:

```
SW V01.20  YYMMDD
Val:        31024
```

<- Software version **V0x.xx** with date (YY = year, MM = month, DD = day)

3.6.6 Referencing the device

The ODSL 30 is equipped with a referencing function for internally calibrating the sensor.

By carrying out the integrated reference measurement function before a measurement, the sensor's accuracy can be improved.

A referencing operation is performed

- **when switching on** the device (Power-On).
- **by means of a signal** at the activation/referencing input (PIN 2).
- **by means of a command** in remote control operation (ODSL 30/D… only).

Notice

In particular, the referencing function should be performed for changing environmental conditions.

While the referencing function is carried out (duration about 350 ms), no measurement can be taken.

3.7 Configuration ODSL 30

Configuration / navigation in the menu

By pressing an arbitrary key, the LC display illumination is switched on, and the configuration menu of the ODSL 30 appears.

- **You can scroll through the menu items using the arrow keys.**
- **You can select the individual menu items by pressing ENTER.**
- **If a value or parameter can be changed, a cursor flashes. You can change this value or parameter by using the arrow keys. You apply the setting by pressing ENTER.**
- **Via the menu item "Return", you return to the parent level in the menu structure.**
- **Via the menu item "Exit from Menu", you return to the measurement mode.**

Notice

Values that can be toggled or edited are shown in red (PDF file) or grey (b/w print of the manual) in the menu structure.

If no key is pressed for 60 s in the configuration menu, the device automatically returns to the measurement mode.

*The device can be protected against unauthorized configuration change by activating the password query. The **password** is always set to "**165**".*

3.7.1 Configuration / menu structure ODSL 30/V… (analogue)

Level 1	Level 2	Level 3	Level 4	Explanation / Notes	Default
Applic. Param.	Tmeas Band Rem. 100ms 150m 6-90%	Tmeas Band Rem. 100ms 150m 6-90%		Measurement time / uniqueness range / object reflectivity	X
		Tmeas Band Rem. 80ms 39m 6-90%		Measurement time / uniqueness range / object reflectivity	
		Tmeas Band Rem. 70ms 9.8m 6-90%		Measurement time / uniqueness range / object reflectivity	
		Tmeas Band Rem. 50ms 150m 50-90%		Measurement time / uniqueness range / object reflectivity	
		Tmeas Band Rem. 40ms 39m 50-90%		Measurement time / uniqueness range / object reflectivity	
		Tmeas Band Rem. 30ms 9.8m 50-90%		Measurement time / uniqueness range / object reflectivity	
	Disp. Resolution 1mm	Disp. Resolution 1mm		Display resolution 1 mm	X
		Disp. Resolution 0.1mm		Display resolution 0.1 mm	
	Offset/Preset	Offset Direction ... positive	Offset Direction ... positive	Offset sign positive	X
			Offset Direction ... negative	Offset sign negative	
		Offsetvalue [mm] Value: 000000	Offsetvalue [mm] act Val. 000000	Offset value, entry in mm	0
		Presetvalue [mm] Value: 000000	Presetvalue [mm] act Val. 000000	Preset value, entry in mm	0
		Preset Calculate ... inactive	Preset Calculate ... active	Trigger of the preset function	
	Return			Return to level 1	
Input Menu	Inp. teach Q1/Q2 Teach Out Q1/Q2	Inp. teach Q1/Q2 Teach Out Q1/Q2		Teach input is activated	X
		Inp. teach Q1/Q2 Input disabled		Teach input is deactivated	
	Input activ/ref Referencing	Input activ/ref Referencing		Input is referencing input	X
		Input activ/ref Activation + Ref		Input is activation and referencing input	
		Input activ/ref Input disabled		Input activ is deactivated	
	Input Polarity active HIGH +24V	Input Polarity active HIGH +24V		All inputs are active high	X
		Input Polarity active LOW 0V		All inputs are active low	
	Teach Mode slope control	Teach Mode slope control		Teach-in, slope controlled	X
		Teach Mode time control		Teach-in, time controlled	
	Return			Return to level 1	

Note

The functions under Applic. Param. are not available until the **Advanced Menu** is activated (see chapter 3.8)

Level 1	Level 2	Level 3	Level 4	Explanation / Notes	Default
Output Q Menu	Q1 Function sel.	Q1 Upper Sw. Pt. Value: 001000	Q1 Upper Sw. Pt. act Value: 001000	Upper switching point of output Q1 in millimetres	1000
		Q1 Lower Sw. Pt. Value: 000199	Q1 Lower Sw. Pt. act Value: 000199	Lower switching point of output Q1 in millimetres	199
		Q1 Hysteresis Value: 000020	Q1 Hysteresis act Value: 00020	Switching hysteresis of output Q1 in millimeters	20
		Q1 light/dark light switching	Q1 light/dark light switching	Q1 is active if an object is in the switching range	X
			Q1 light/dark dark switching	Q1 is active if no object is present in the switching range	
		Q1 Driver PNP high active	Q1 Driver PNP high active	Q1 is high-side output (PNP)	X
			Q1 Driver NPN low active	Q1 is low-side output (NPN)	
			Q1 Driver PNP/NPN pushpull	Q1 is push-pull output	
		Return		Return to level 2	
	Return			Return to level 1	
Analogue Out Menu	Cal. Ana. Output Current 4-20mA	Cal. Ana. Output Current 4-20mA		Current output calibrated, Voltage output uncalibrated	X
		Cal. Ana. Output Voltage 1-10V		Voltage output calibrated, Current output uncalibrated	
	Pos for max. val Value: 005000	Pos for max. val act Value: 05000		Distance [mm], at which the max. analogue value is output	5000
	Pos for min. val Value: 000200	Pos for min. val act Value: 00200		Distance [mm], at which the min. analogue value is output	200
	Return			Return to level 1	
Service Menu	Password Check inactive	Password Check inactive		Password for menu access not active	X
		Password Check activated		Menu access password active, password: 165 (n. changeable)	
	ODSL 30 Serial No Val: 99999			Display of serial number, no changes possible	
	SW V01.20 YYMMDD Val: 31024			Display of software version, no changes possible	
	Parameter YYMMDD Val: 31024			Display of parameter version, no changes possible	
	Interface-Type Analogue Interface			Display of the interface type, no changes possible	
	Return			Return to level 1	
Exit from Menu				Return to measurement mode	

3.7.2 Configuration / menu structure ODSL 30/24… (3 switching outputs)

Level 1	Level 2	Level 3	Level 4	Explanation / Notes	Default
Applic. Param.	Tmeas Band Rem. 100ms 150m 6-90%	Tmeas Band Rem. 100ms 150m 6-90%		Measurement time / uniqueness range / object reflectivity	X
		Tmeas Band Rem. 80ms 39m 6-90%		Measurement time / uniqueness range / object reflectivity	
		Tmeas Band Rem. 70ms 9.8m 6-90%		Measurement time / uniqueness range / object reflectivity	
		Tmeas Band Rem. 50ms 150m 50-90%		Measurement time / uniqueness range / object reflectivity	
		Tmeas Band Rem. 40ms 39m 50-90%		Measurement time / uniqueness range / object reflectivity	
		Tmeas Band Rem. 30ms 9.8m 50-90%		Measurement time / uniqueness range / object reflectivity	
	Disp. Resolution 1mm	Disp. Resolution 1mm		Display resolution 1 mm	X
		Disp. Resolution 0.1mm		Display resolution 0.1 mm	
	Offset/Preset	Offset Direction ... positive	Offset Direction ... positive	Offset sign positive	X
			Offset Direction ... negative	Offset sign negative	
		Offsetvalue [mm] Value: 000000	Offsetvalue [mm] act Val. 000000	Offset value, entry in mm	0
		Presetvalue [mm] Value: 000000	Presetvalue [mm] act Val. 000000	Preset value, entry in mm	0
		Preset Calculate ... inactive	Preset Calculate ... active	Trigger of the preset function	
	Return			Return to level 1	
Input Menu	Inp. teach Q1/Q2 Teach Out Q1/Q2	Inp. teach Q1/Q2 Teach Out Q1/Q2		Teach input is activated	X
		Inp. teach Q1/Q2 Input disabled		Teach input is deactivated	
	Input activ/ref Referencing	Input activ/ref Referencing		Input is referencing input	X
		Input activ/ref Activation + Ref		Input is activation and referencing input	
		Input activ/ref Input disabled		Input activ is deactivated	
	Inp. teach Q3 Teach output Q3	Inp. teach Q3 Teach Output Q3		Teach input is activated	X
		Inp. teach Q3 Input disabled		Teach input is deactivated	
	Input Polarity active HIGH +24V	Input Polarity active HIGH +24V		All inputs are active high	X
		Input Polarity active LOW 0V		All inputs are active low	
	Return			Return to level 1	

Note

The functions under Applic. Param. are not available until the **Advanced Menu** is activated (see chapter 3.8)

Level 1	Level 2	Level 3	Level 4	Explanation / Notes	Default
Output Q Menu	Q1 Function sel.	Q1 Upper Sw. Pt. Value: 001000	Q1 Upper Sw. Pt. act Value: 001000	Upper switching point of output Q1 in millimetres	1000
		Q1 Lower Sw. Pt. Value: 000199	Q1 Lower Sw. Pt. act Value: 000199	Lower switching point of output Q1 in millimetres	199
		Q1 Hysteresis Value: 000020	Q1 Hysteresis act Value: 00020	Switching hysteresis of output Q1 in millimeters	20
		Q1 light/dark light switching	Q1 light/dark light switching	Q1 is active if an object is in the switching range	X
			Q1 light/dark dark switching	Q1 is active if no object is present in the switching range	
		Q1 Driver PNP high active	Q1 Driver PNP high active	Q1 is high-side output (PNP)	X
			Q1 Driver NPN low active	Q1 is low-side output (NPN)	
			Q1 Driver PNP/NPN pushpull	Q1 is push-pull output	
		Return		Return to level 2	
	Q2 Function sel.	Q2 Upper Sw. Pt. Value: 001500	Q2 Upper Sw. Pt. act Value: 001500	Upper switching point of output Q2 in millimetres	1500
		Q2 Lower Sw. Pt. Value: 000199	Q2 Lower Sw. Pt. act Value: 000199	Lower switching point of output Q2 in millimetres	199
		Q2 Hysteresis Value: 000020	Q2 Hysteresis act Value: 00020	Switching hysteresis of output Q2 in millimetres	20
		Q2 light/dark light switching	Q2 light/dark light switching	Q2 is active if an object is present in the switching range	X
			Q2 light/dark dark switching	Q2 is active if no object is present in the switching range	
		Q2 Driver PNP high active	Q2 Driver PNP high active	Q2 is high-side output (PNP)	X
			Q2 Driver NPN low active	Q2 is low-side output (NPN)	
			Q2 Driver PNP/NPN pushpull	Q2 is push-pull output	
		Return		Return to level 2	
	Q3 Function sel.	Q3 Upper Sw. Pt. Value: 002000	Q3 Upper Sw. Pt. act Value: 002000	Upper switching point of output Q3 in millimetres	2000
		Q3 Lower Sw. Pt. Value: 000199	Q3 Lower Sw. Pt. act Value: 000199	Lower switching point of output Q3 in millimetres	199
		Q3 Hysteresis Value: 000020	Q3 Hysteresis act Value: 00020	Switching hysteresis of output Q3 in millimetres	20
		Q3 light/dark light switching	Q3 light/dark light switching	Q3 is active if an object is present in the switching range	X
			Q3 light/dark dark switching	Q3 is active if no object is present in the switching range	
		Q3 Driver PNP high active	Q3 Driver PNP high active	Q3 is high-side output (PNP)	X
			Q3 Driver NPN low active	Q3 is low-side output (NPN)	
			Q3 Driver PNP/NPN pushpull	Q3 is push-pull output	
		Return		Return to level 2	
	Return			Return to level 1	

Level 1	Level 2	Level 3	Level 4	Explanation / Notes	Default
Service Menu	Password Check inactive	Password Check inactive		Password for menu access not active	X
		Password Check activated		Menu access password active, password: 165 (n. changeable)	
	ODSL 30 Serial No Val: 99999			Display of serial number, no changes possible	
	SW V01.20 YYMMDD Val: 31024			Display of software version, no changes possible	
	Parameter YYMMDD Val: 31024			Display of parameter version, no changes possible	
	Interface-Type 3 Outp. Q1-Q2-Q3			Display of the interface type, no changes possible	
	Return			Return to level 1	
Exit from Menu				Return to measurement mode	

3.7.3 Configuration / menu structure ODSL 30/D 232… (digital RS 232)

Level 1	Level 2	Level 3	Level 4	Explanation / Notes	Default
Applic. Param.	Tmeas Band Rem. 100ms 150m 6-90%	Tmeas Band Rem. 100ms 150m 6-90%		Measurement time / uniqueness range / object reflectivity	X
		Tmeas Band Rem. 80ms 39m 6-90%		Measurement time / uniqueness range / object reflectivity	
		Tmeas Band Rem. 70ms 9.8m 6-90%		Measurement time / uniqueness range / object reflectivity	
		Tmeas Band Rem. 50ms 150m 50-90%		Measurement time / uniqueness range / object reflectivity	
		Tmeas Band Rem. 40ms 39m 50-90%		Measurement time / uniqueness range / object reflectivity	
		Tmeas Band Rem. 30ms 9.8m 50-90%		Measurement time / uniqueness range / object reflectivity	
	Disp. Resolution 1mm	Disp. Resolution 1mm		Display resolution 1 mm	X
		Disp. Resolution 0.1mm		Display resolution 0.1 mm	
	Offset/Preset	Offset Direction ... positive	Offset Direction ... positive	Offset sign positive	X
			Offset Direction ... negative	Offset sign negative	
		Offsetvalue [mm] Value: 000000	Offsetvalue [mm] act Val. 000000	Offset value, entry in mm	0
		Presetvalue [mm] Value: 000000	Presetvalue [mm] act Val. 000000	Preset value, entry in mm	0
		Preset Calculate ... inactive	Preset Calculate ... active	Trigger of the preset function	
	Return			Return to level 1	
Input Menu	Inp. teach Q1/Q2 Teach Out Q1/Q2	Inp. teach Q1/Q2 Teach Out Q1/Q2		Teach input is activated	X
		Inp. teach Q1/Q2 Input disabled		Teach input is deactivated	
	Input activ/ref Referencing	Input activ/ref Referencing		Input is referencing input	X
		Input activ/ref Activation + Ref		Input is activation and referencing input	
		Input activ/ref Input disabled		Input activ is deactivated	
	Input Polarity active HIGH +24V	Input Polarity active HIGH +24V		All inputs are active high	X
		Input Polarity active LOW 0V		All inputs are active low	
	Return			Return to level 1	

Note

The functions under Applic. Param. are not available until the **Advanced Menu** is activated (see chapter 3.8)

Level 1	Level 2	Level 3	Level 4	Explanation / Notes	Default
Output Q Menu	Q1 Function sel.	Q1 Upper Sw. Pt. Value: 001000	Q1 Upper Sw. Pt. act Value: 001000	Upper switching point of output Q1 in millimetres	1000
		Q1 Lower Sw. Pt. Value: 000199	Q1 Lower Sw. Pt. act Value: 000199	Lower switching point of output Q1 in millimetres	199
		Q1 Hysteresis Value: 000020	Q1 Hysteresis act Value: 00020	Switching hysteresis of output Q1 in millimeters	20
		Q1 light/dark light switching	Q1 light/dark light switching	Q1 is active if an object is in the switching range	X
			Q1 light/dark dark switching	Q1 is active if no object is present in the switching range	
		Q1 Driver PNP high active	Q1 Driver PNP high active	Q1 is high-side output (PNP)	X
			Q1 Driver NPN low active	Q1 is low-side output (NPN)	
			Q1 Driver PNP/NPN pushpull	Q1 is push-pull output	
		Return		Return to level 2	
	Q2 Function sel.	Q2 Upper Sw. Pt. Value: 001500	Q2 Upper Sw. Pt. act Value: 001500	Upper switching point of output Q2 in millimetres	1500
		Q2 Lower Sw. Pt. Value: 000199	Q2 Lower Sw. Pt. act Value: 000199	Lower switching point of output Q2 in millimetres	199
		Q2 Hysteresis Value: 000020	Q2 Hysteresis act Value: 00020	Switching hysteresis of output Q2 in millimetres	20
		Q2 light/dark light switching	Q2 light/dark light switching	Q2 is active if an object is present in the switching range	X
			Q2 light/dark dark switching	Q2 is active if no object is present in the switching range	
		Q2 Driver PNP high active	Q2 Driver PNP high active	Q2 is high-side output (PNP)	X
			Q2 Driver NPN low active	Q2 is low-side output (NPN)	
			Q2 Driver PNP/NPN pushpull	Q2 is push-pull output	
		Return		Return to level 2	
	Return			Return to level 1	

Level 1	Level 2	Level 3	Level 4	Explanation / Notes	Default
Serial COM Menu	COM Function sel ASCII Distance	COM Function sel ASCII Distance		Serial transmission, output in ASCII, 5 bytes, resolut. 1 mm	X
		COM Function sel ASCII Dist. .1mm		Serial transmission, output in ASCII, 6 bytes, resolut. 0.1 mm	
		COM Function sel Distance 14 bit		Serial transmission, 2 bytes, 15 m meas. range, res. 1 mm	
		COM Function sel Distance 16 bit		Serial transmission, 3 bytes, 30 m meas. range, res. 1 mm	
		COM Function sel Distance 20bit		Serial transmission, 4 bytes, 30 m meas. range, res. 0.1 mm	
		COM Function sel Remote Control		Remote control activated, RS 232 no bus operation	
		COM Function sel switched OFF		Serial data transmission deactivated	
	Node Address Value: 000	Node Address act Value: 000		Node address 0 … 14	0
	Baudrate COM Baudrate 9600	Baudrate COM Baudrate 9600		Baud rate 9600 bit/s	X
		Baudrate COM Baudrate 19200		Baud rate 19200 bit/s	
		Baudrate COM Baudrate 28800		Baud rate 28800 bit/s	
		Baudrate COM Baudrate 38400		Baud rate 38400 bit/s	
		Baudrate COM Baudrate 57600		Baud rate 57600 bit/s	
		Baudrate COM Baudrate 115200		Baud rate 115200 bit/s	
		Baudrate COM Baudrate 600		Baud rate 600 bit/s	
		Baudrate COM Baudrate 1200		Baud rate 1200 bit/s	
		Baudrate COM Baudrate 2400		Baud rate 2400 bit/s	
		Baudrate COM Baudrate 4800		Baud rate 4800 bit/s	
	Stopbits COM 1	Stopbits COM 1		Number of stop bits: 1	X
		Stopbits COM 2		Number of stop bits: 2	
	Return			Return to level 1	
Service Menu	Password Check inactive	Password Check inactive		Password for menu access not active	X
		Password Check activated		Menu access password active, password: 165 (n. changeable)	
	ODSL 30 Serial No Val: 99999			Display of serial number, no changes possible	
	SW V01.20 YYMMDD Val: 31024			Display of software version, no changes possible	
	Parameter YYMMDD Val: 31024			Display of parameter version, no changes possible	
	Interface-Type RS 232 Interface			Display of the interface type, no changes possible	
	Return			Return to level 1	
Exit from Menu				Return to measurement mode	

3.7.4 Configuration / menu structure ODSL 30/D 485… (digital RS 485)

Level 1	Level 2	Level 3	Level 4	Explanation / Notes	Default
Applic. Param.	Tmeas Band Rem. 100ms 150m 6-90%	Tmeas Band Rem. 100ms 150m 6-90%		Measurement time / uniqueness range / object reflectivity	X
		Tmeas Band Rem. 80ms 39m 6-90%		Measurement time / uniqueness range / object reflectivity	
		Tmeas Band Rem. 70ms 9.8m 6-90%		Measurement time / uniqueness range / object reflectivity	
		Tmeas Band Rem. 50ms 150m 50-90%		Measurement time / uniqueness range / object reflectivity	
		Tmeas Band Rem. 40ms 39m 50-90%		Measurement time / uniqueness range / object reflectivity	
		Tmeas Band Rem. 30ms 9.8m 50-90%		Measurement time / uniqueness range / object reflectivity	
	Disp. Resolution 1mm	Disp. Resolution 1mm		Display resolution 1 mm	X
		Disp. Resolution 0.1mm		Display resolution 0.1 mm	
	Offset/Preset	Offset Direction ... positive	Offset Direction ... positive	Offset sign positive	X
			Offset Direction ... negative	Offset sign negative	
		Offsetvalue [mm] Value: 000000	Offsetvalue [mm] act Val. 000000	Offset value, entry in mm	0
		Presetvalue [mm] Value: 000000	Presetvalue [mm] act Val. 000000	Preset value, entry in mm	0
		Preset Calculate ... inactive	Preset Calculate ... active	Trigger of the preset function	
	Return			Return to level 1	
Input Menu	Inp. teach Q1/Q2 Teach Out Q1/Q2	Inp. teach Q1/Q2 Teach Out Q1/Q2		Teach input is activated	X
		Inp. teach Q1/Q2 Input disabled		Teach input is deactivated	
	Input activ/ref Referencing	Input activ/ref Referencing		Input is referencing input	X
		Input activ/ref Activation + Ref		Input is activation and referencing input	
		Input activ/ref Input disabled		Input activ is deactivated	
	Input Polarity active HIGH +24V	Input Polarity active HIGH +24V		All inputs are active high	X
		Input Polarity active LOW 0V		All inputs are active low	
	Return			Return to level 1	

Note

The functions under Applic. Param. are not available until the **Advanced Menu** is activated (see chapter 3.8)

Level 1	Level 2	Level 3	Level 4	Explanation / Notes	Default
Output Q Menu	Q1 Function sel.	Q1 Upper Sw. Pt. Value: 001000	Q1 Upper Sw. Pt. act Value: 001000	Upper switching point of output Q1 in millimetres	1000
		Q1 Lower Sw. Pt. Value: 000199	Q1 Lower Sw. Pt. act Value: 000199	Lower switching point of output Q1 in millimetres	199
		Q1 Hysteresis Value: 000020	Q1 Hysteresis act Value: 00020	Switching hysteresis of output Q1 in millimeters	20
		Q1 light/dark light switching	Q1 light/dark light switching	Q1 is active if an object is in the switching range	X
			Q1 light/dark dark switching	Q1 is active if no object is present in the switching range	
		Q1 Driver PNP high active	Q1 Driver PNP high active	Q1 is high-side output (PNP)	X
			Q1 Driver NPN low active	Q1 is low-side output (NPN)	
			Q1 Driver PNP/NPN pushpull	Q1 is push-pull output	
		Return		Return to level 2	
	Q2 Function sel.	Q2 Upper Sw. Pt. Value: 001500	Q2 Upper Sw. Pt. act Value: 001500	Upper switching point of output Q2 in millimetres	1500
		Q2 Lower Sw. Pt. Value: 000199	Q2 Lower Sw. Pt. act Value: 000199	Lower switching point of output Q2 in millimetres	199
		Q2 Hysteresis Value: 000020	Q2 Hysteresis act Value: 00020	Switching hysteresis of output Q2 in millimetres	20
		Q2 light/dark light switching	Q2 light/dark light switching	Q2 is active if an object is present in the switching range	X
			Q2 light/dark dark switching	Q2 is active if no object is present in the switching range	
		Q2 Driver PNP high active	Q2 Driver PNP high active	Q2 is high-side output (PNP)	X
			Q2 Driver NPN low active	Q2 is low-side output (NPN)	
			Q2 Driver PNP/NPN pushpull	Q2 is push-pull output	
		Return		Return to level 2	
	Return			Return to level 1	

Level 1	Level 2	Level 3	Level 4	Explanation / Notes	Default
Serial COM Menu	COM Function sel ASCII Distance	COM Function sel ASCII Distance		Serial transmission, output in ASCII, 5 bytes, resolut. 1 mm	X
		COM Function sel ASCII Dist. .1mm		Serial transmission, output in ASCII, 6 bytes, resolut. 0.1 mm	
		COM Function sel Distance 14 bit		Serial transmission, 2 bytes, 15 m meas. range, res. 1 mm	
		COM Function sel Distance 16 bit		Serial transmission, 3 bytes, 30 m meas. range, res. 1 mm	
		COM Function sel Distance 20bit		Serial transmission, 4 bytes, 30 m meas. range, res. 0.1 mm	
		COM Function sel Remote Control		Remote control activated via bus commands	
		COM Function sel switched OFF		Serial data transmission deactivated	
	Node Address Value: 000	Node Address act Value: 000		Node address 0 … 14	0
	Baudrate COM Baudrate 9600	Baudrate COM Baudrate 9600		Baud rate 9600 bit/s	X
		Baudrate COM Baudrate 19200		Baud rate 19200 bit/s	
		Baudrate COM Baudrate 28800		Baud rate 28800 bit/s	
		Baudrate COM Baudrate 38400		Baud rate 38400 bit/s	
		Baudrate COM Baudrate 57600		Baud rate 57600 bit/s	
		Baudrate COM Baudrate 115200		Baud rate 115200 bit/s	
		Baudrate COM Baudrate 600		Baud rate 600 bit/s	
		Baudrate COM Baudrate 1200		Baud rate 1200 bit/s	
		Baudrate COM Baudrate 2400		Baud rate 2400 bit/s	
		Baudrate COM Baudrate 4800		Baud rate 4800 bit/s	
	Stopbits COM 1	Stopbits COM 1		Number of stop bits: 1	X
		Stopbits COM 2		Number of stop bits: 2	
	Return			Return to level 1	
Service Menu	Password Check inactive	Password Check inactive		Password for menu access not active	X
		Password Check activated		Menu access password active, password: 165 (n. changeable)	
	ODSL 30 Serial No Val: 99999			Display of serial number, no changes possible	
	SW V01.20 YYMMDD Val: 31024			Display of software version, no changes possible	
	Parameter YYMMDD Val: 31024			Display of parameter version, no changes possible	
	Interface-Type RS 485 Interface			Display of the interface type, no changes possible	
	Return			Return to level 1	
Exit from Menu				Return to measurement mode	

3.7.5 Operating example

The following values are to be configured for an ODSL 30/V…:

- calibrated current output 4 … 20 mA, characteristic curve with positive gradient and measurement range 500 … 3500 mm.
- upper switching point for output Q1 at 3000 mm and lower switching point for output Q1 at 2000 mm.

The device is set to factory settings and is in measurement mode.

Configuring the calibrated current output

Action	Display	Explanation / Notes
Press an arbitrary key ▲, ▼, or ENTER.	Input Menu	You get to the configuration menu for the ODSL 30…
Press the keys ▲ and ▼ to change to the menu item "Analog Out Menu".	Analogue Out Menu	This menu item configures the analogue output.
Select menu item with the ENTER key.	Cal Ana. Output Current 4-20mA	Current output 4 … 20 mA is already set as the calibrated output.
Press the keys ▲ and ▼ to change to the menu item "Pos for min. val".	Pos for min. val Value: 000200	This menu item sets the distance value for the minimum analogue value.
Press the ENTER key to edit the value.	Pos for min. val act Value: 00200	Ready for editing.
Press the ▲ and ▼ keys to change the present value to "500".	Pos for min. val new Value->00500	New value has been edited.
Apply the new value by pressing the ENTER key.	to store press ↵ new Val.: 00500	Applying.
Save the new value by pressing the ENTER key.	Pos for min. val Value: 000500	Saving.
Press the keys ▲ and ▼ to change to the menu item "Pos for max. val".	Pos for max. val Value: 005000	This menu item sets the distance value for the maximum analogue value.
Press the ENTER key to edit the value.	Pos for max. val act Value: 05000	Ready for editing.
Press the ▲ and ▼ keys to change the present value to "3500".	Pos for max. val new Value->03500	New value has been edited.
Apply the new value by pressing the ENTER key.	to store press ↵ new Val.: 03500	Applying.
Save the new value by pressing the ENTER key.	Pos for max. val Value: 003500	Saving.
Change to the menu item "Return" by pressing the ▲ and ▼ keys.	Return	This menu item leads to the parent level.

Action	Display	Explanation / Notes
Select menu item with the ENTER key.	Analogue Out Menu	Menu level 1.
Press the keys ▲ and ▼ to change to the menu item "Exit from Menu".	Exit from Menu	This menu item exits the configuration menu.
Select menu item with the ENTER key.	Leuze electronic Dist. [mm] 10687	The device has returned to measurement mode

Configuring switching points Q1

Action	Display	Explanation / Notes
Press an arbitrary key ▲, ▼, or ENTER.	Input Menu	You get to the configuration menu for the ODSL 30…
Press the keys ▲ and ▼ to change to the menu item "Output Q Menu".	Output Q Menu	This menu item configures the switching outputs.
Select menu item with the ENTER key.	Q1 Function sel.	This menu item configures the switching output Q1.
Select menu item with the ENTER key.	Q1 Upper Sw. Pt. Value: 001000	This menu item configures the upper switching point for output Q1.
Press the ENTER key to edit the value.	Q1 Upper Sw. Pt. act Value: 001000	Ready for editing.
Press the ▲ and ▼ keys to change the present value to "3000".	Q1 Upper Sw. Pt. new Value->003000	New value has been edited.
Apply the new value by pressing the ENTER key.	to store press ↵ new Val.: 003000	Applying.
Save the new value by pressing the ENTER key.	Q1 Upper Sw. Pt. Value: 003000	Saving.
Press the keys ▲ and ▼ to change to the menu item "Q1 Lower Sw. Pt.".	Q1 Lower Sw. Pt. Value: 000199	This menu item configures the lower switching point for output Q1.
Press the ENTER key to edit the value.	Q1 Lower Sw. Pt. act Value: 000199	Ready for editing.
Press the ▲ and ▼ keys to change the present value to "2000".	Q1 Lower Sw. Pt. new Value->002000	New value has been edited.
Apply the new value by pressing the ENTER key.	to store press ↵ new Val.: 002000	Applying.
Save the new value by pressing the ENTER key.	Q1 Lower Sw. Pt. Value: 002000	Saving.

Action	Display	Explanation / Notes
Change to the menu item "Return" by pressing the ▲ and ▼ keys.	Return	This menu item leads to the parent level.
Select menu item with the ENTER key.	Q1 Function sel.	Menu level 2.
Change to the menu item "Return" by pressing the ▲ and ▼ keys.	Return	This menu item leads to the parent level.
Select menu item with the ENTER key.	Output Q Menu	Menu level 1.
Press the keys ▲ and ▼ to change to the menu item "Exit from Menu".	Exit from Menu	This menu item exits the configuration menu.
Select menu item with the ENTER key.	Leuze electronic Dist. [mm] 10687	The device has returned to measurement mode

3.8 Advanced Menu (for software versions V01.10 and newer)

Notice!

For information on querying the device software version, see chapter 3.6.5.

In addition to the described functions, additional, new functions are available in the **Advanced Menu**:

- Setting an **offset/preset** value to compensate for mounting tolerances
- **Reduction in measurement time** to as little as 30 ms
- Changing the **display resolution**

Also available in the Advanced Menu is the menu item Applic. Param.. This can be used to change the measurement value output of the ODSL 30.

Notice!

To protect against unintentional access, the Advanced Menu is hidden from view by default and must first be activated by the user.

Attention!

Please be certain to read the following notices before you activate the advanced mode and change parameters in the menu item Applic. Param..

Activation of the advanced mode

- Hold down the ENTER button **during measurement operation** for longer than 5 s.
  The Advanced Menu? NO ↑or↓ YES↵ display appears.
- Press the ▲ or ▼ button to cancel activation of the Advanced Menu.
- Confirm Yes by pressing the ENTER button.
  The Advanced Menu is activated now display appears briefly.

The menu item Applic. Param. is now also available in menu level 1.

3.8.1 Setting an Offset/Preset Value - Compensating for Mounting Tolerances

Deviations which occur during mounting of the ODSL 30 can be compensated for with the **offset** or **preset** parameter:

- For **Offset**, a fixed value and sign are specified.
- For **Preset**, a nominal measurement value is specified; a measurement is then performed using an object located at the desired nominal distance.

Attention!

If the offset or preset results in negative measurement values, zero is output at the interface and on the display.

Setting the offset

Configuration is performed using the keypad and display:

Applic. Param. -> Offset/Preset

The following can be entered:

- Offset Direction
  Selection... positive or ... negative, i.e. specifies whether the offset value is added to or subtracted from the measurement value.
- Offsetvalue [mm]
  Enter the offset value.

The set offset value is subtracted from the calculated (digital) measurement value of the sensor if negative was set for the Offset Direction.

Example:

Measurement value of the ODSL 30:	1500 mm,
Input:	Offsetvalue: 100 mm, Offset Direction: … negative

Output on the display and at the interface: 1400 mm

Setting the preset

Configuration is performed using the keypad and display:

Applic. Param. -> Offset/Preset

Procedure for setting a preset value:

- Enter nominal value -> Presetvalue [mm]
- In menu item Preset calculate, select the option ... active
- Press the ENTER button to confirm.
  A measurement is made, the preset is stored and the ODSL 30 is ready.

The offset value is automatically calculated from the measurement value and nominal measurement value (preset value) and entered as the offset in the configuration. **A preset is deactivated by entering an offset value of zero**.

Example:

Input:	Preset value: 1400 mm,
Object dist. 1300 mm in front of ODSL 30:	Preset Calculation ...active, trigger measurement, an offset of +100 mm is automatically stored
Object distance 1300 mm:	Output on display and at interface: 1400 mm
Object distance 1400 mm:	Output on display and at interface: 1500 mm

3.8.2 Reduction in Measurement Time to as Little as 30 ms

Definition of uniqueness range

Due to the periodicity of the sinusoid, the phasing of the signals received by the ODSL 30 limits the determination of unique measurement values to within a specific interval. The length of this interval is called the uniqueness range. A large uniqueness range is equivalent to high background suppression.

Relationship between uniqueness range - luminosity coefficient - measurement time

In the default setting (uniqueness range 150 m, measurement on both light as well as dark objects with luminosity coefficients of 6 … 90 %), the measurement time is 100 ms.

By limiting the uniqueness range and the luminosity coefficient (measurements on only light objects with luminosity coefficients of 50 … 90 %), the measurement time can be reduced to as little as 30 ms.

Configuration is performed using the keypad and display:

`Applic. Param.` -> `Tmeas Band Rem.`

Changes to these variables yield measurement times as shown in the following table:

Meas. time [ms]	Uniqueness range [m]	Object luminosity coefficient [%]	Setting in the menu item `Tmeas Band Rem.`
30	9.8	50 … 90 (light objects)	`30ms 9.8m 50-90%`
40	39		`40ms 39m 50-90%`
50	150		`50ms 150m 50-90%`
70	9.8	6 … 90 (light and dark objects)	`70ms 9.8m 6-90%`
80	39		`80ms 39m 6-90%`
100 [1)]	150		`100ms 150m 6-90%`

1) Default setting

Notice!

By using the cooperative target CTS 100x100 (Part No. 501 04599), you ensure that the luminosity coefficient on the surface being measured is 50 … 90 %.

Attention!

If an object is located at a distance greater than the preselected uniqueness range, incorrect measurements will result (provided the reception signal is sufficiently high)!

Example:

With a uniqueness range of 9.8m, an object is located at a distance of 1m. The sensor outputs a correct measurement value of 1m.

If the object is located at a distance of 10.8m or 20.6m or 30.4m etc. from the sensor, the sensor outputs an incorrect measurement value of 1m, i.e. a correct measurement value is only output for objects located within the uniqueness range.

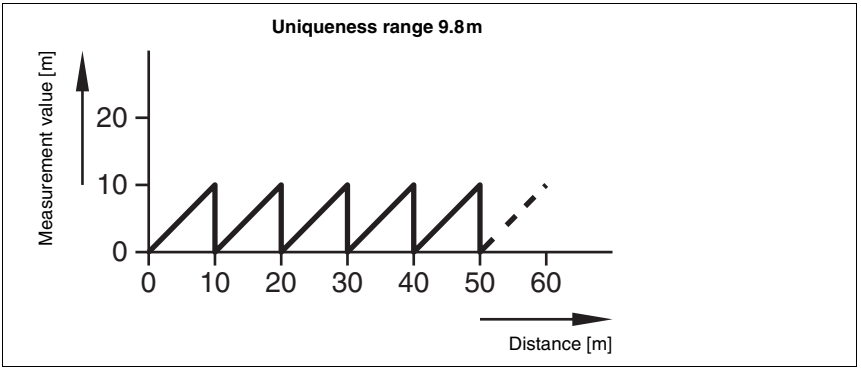

Figure 3.11:ODSL 30 measurement values with a uniqueness range of 9.8m

3.8.3 Changing the Display Resolution

On delivery, the measurement resolution of the ODSL 30 (display) is 1mm. In the advanced mode, the resolution of the display can be increased to 0.1mm by configuring with the keypad and display:

`Applic. Param.` -> `Disp. Resolution 0.1mm`.

Notice!

*This menu item refers **only to the display**. Changing this parameter has **no direct effect on the output** at the serial or analogue interfaces.*

If you would like to transmit measurement data with a resolution of 0.1mm using the ODSL 30/D... with serial interface, this can be parameterized at a different location (see chapter 3.4.3).

For the ODSL 30/V…, the measurement range is to be restricted by appropriately configuring the analogue output.

The configuration of a resolution of 0.1mm is useful when performing measurements on objects with high diffuse reflection and when the measurement data are processed further (e.g. averaging).

4 Technical Data ODSL 30

4.1 General specifications

	ODSL 30
Optical data	
Measurement range	200 … 30000 mm (6 … 90% diffuse reflection) 200 … 65000 mm (50 … 90% diffuse reflection, only ODSL 30/D…)
Resolution [1]	0.1 mm/1 mm (factory setting)
Light source	laser (modulated light)
Wavelength	655 nm (visible red light)
Laser class	2 (in accordance with EN 60825-1)
Light spot diameter	divergent, Ø 6 mm at a distance of 10 m
Minimum object size	50 x 50 mm^2 at a distance of 10 m (6 … 90% diffuse reflection)
Timing	
Measurement time [2]	30 … 100 ms (factory setting: 100 ms)
Delay before start-up	≤ 1 s
Mechanical data	
Housing	metal
Optics cover	glass
Weight	650 g
Connection type	M12 connector, 8-pin
Environmental data	
Ambient temperature (operation[3]/storage)	-10 … +45 °C / -40 … +70 °C
Ambient light limit	£ 5 kLux
Protective circuit [4]	2, 3
VDE safety class[5]	II, all-insulated
Protection class	IP 67
Standards applied	IEC 60947-5-2
Certifications	UL 508, C22.2 No.14-13 [6] [7]

1) Resolution on the LC display
2) Configurable, depends on the reflectivity of the object and on the max. detection range
3) After an operating time of 30 min., the device has reached the operating temperature required for an optimal measurement.
4) 2=polarity reversal protection, 3=short-circuit protection for all outputs
5) Rating voltage 250 VAC
6) For UL applications: only for use in "Class 2" electrical circuits according to NEC
7) These sensors shall be used with UL Listed Cable assemblies rated 30 V, 0.5 A min, in the field installation, or equivalent (categories: CYJV/CYJV7 or PVVA/PVVA7)

4.2 Device-specific data

4.2.1 ODSL 30/V-30M-S12

	ODSL 30/V-30M-S12
Electrical data	
Operating voltage U_B [1]	18 … 30VDC (incl. residual ripple)
Residual ripple	≤ 15% of U_B
Power consumption	≤ 4W
Switching output [2]	1 PNP transistor output, HIGH active (default), NPN transistor or push-pull through configuration
Signal voltage high/low	≥ (U_B - 2V) / ≤ 2V
Output current	max. 100mA per transistor output
Analog output [2] [3]	1 voltage output 1 … 10V (R_L ≥ 2kOhm) 1 current output 4 … 20mA (R_L ≤ 500Ohm)
Error limits [4]	
Absolute measurement accuracy [5]	measurement range up to 2.5m: ± 2% without referencing, ± 1% with referencing measurement range 2.5m up to 5m: ± 1.5% without referencing, ± 1% with referencing measurement range 5m up to 30m: ± 1% without referencing, ± 1% with referencing
Repeatability [6]	± 0.5% of measurement value

1) For UL applications: only for use in "Class 2" electrical circuits according to NEC
2) LC display and keypad at the device for configuration
3) The current output (default) or the voltage output is calibrated
4) In the temperature range of 0°C … +45°C, measurement object ≥ 50x50mm²;
at temperatures < 0°C different error limits apply;
5) luminosity coefficient 6% … 90%, temperature range 0°C … +45°C
6) Same object, identical environmental conditions, measurement object ≥ 50 x 50mm²

4.2.2 ODSL 30/24-30M-S12

	ODSL 30/24-30M-S12
Electrical data	
Operating voltage U_B [1]	10 … 30 VDC (incl. residual ripple)
Residual ripple	≤ 15% of U_B
Power consumption	≤ 4 W
Switching outputs [2]	3 PNP transistor outputs, HIGH active (default), NPN transistor or push-pull through configuration
Signal voltage high/low	≥ (U_B - 2 V) / ≤ 2 V
Output current	max. 100 mA per transistor output
Error limits [3]	
Absolute measurement accuracy [4]	± 5 mm (6% diffuse reflection) ± 2 mm (90% diffuse reflection) after referencing
Repeatability [5]	± 2 mm (6 … 90% diffuse reflection)

1) For UL applications: only for use in "Class 2" electrical circuits according to NEC
2) LC display and keypad at the device for configuration
3) In the temperature range of 0°C … +45°C, measurement object ≥ 50x50mm²;
at temperatures < 0°C different error limits apply;
4) Luminosity coefficient 6% … 90%, temperature range 0°C … +45°C
5) Same object, identical environmental conditions

4.2.3 ODSL 30/D 232-30M-S12

	ODSL 30/D 232-30M-S12
Electrical data	
Operating voltage U_B [1]	10 … 30VDC (incl. residual ripple)
Residual ripple	≤ 15% of U_B
Power consumption	≤ 4W
Switching outputs [2]	2 PNP transistor outputs, HIGH active (default), NPN transistor or push-pull through configuration
Signal voltage high/low	≥ (U_B - 2V) / ≤ 2V
Output current	max. 100mA per transistor output
Serial interface	RS 232, 9600 Baud (default), baud rate configurable
Transmission protocol	see chapter 3.4.3
Error limits [3]	
Absolute measurement accuracy [4]	±5mm (6 … 90% diffuse reflection), ±2mm (90% diffuse reflection) after referencing
Repeatability [5]	± 2mm (6 … 90% diffuse reflection)

1) For UL applications: only for use in "Class 2" electrical circuits according to NEC
2) LC display and keypad at the device for configuration
3) In the temperature range of 0°C … +45°C, measurement object ≥ 50x50mm²;
at temperatures < 0°C different error limits apply;
4) Diffuse reflectance 6% … 90%, temperature range 0°C … +45°C
5) Same object, identical environmental conditions

4.2.4 ODSL 30/D 485-30M-S12

	ODSL 30/D 485-30M-S12
Electrical data	
Operating voltage U_B [1]	10 … 30 VDC (incl. residual ripple)
Residual ripple	≤ 15% of U_B
Power consumption	≤ 4 W
Switching outputs [2]	2 PNP transistor outputs, HIGH active (default), NPN transistor or push-pull through configuration
Signal voltage high/low	≥ (U_B - 2 V) / ≤ 2 V
Output current	max. 100 mA per transistor output
Serial interface	RS 485, 9600 Baud (default), no termination, baud rate configurable
Transmission protocol	see chapter 3.4.3
Error limits [3]	
Absolute measurement accuracy [4]	±5 mm (6 … 90% diffuse reflection), ±2 mm (90% diffuse reflection) after referencing
Repeatability [5]	± 2 mm (6 … 90% diffuse reflection)

1) For UL applications: only for use in "Class 2" electrical circuits according to NEC
2) LC display and keypad at the device for configuration
3) In the temperature range of 0°C … +45°C, measurement object ≥ 50x50mm²;
at temperatures < 0°C different error limits apply;
4) Diffuse reflectance 6% … 90%, temperature range 0°C … +45°C
5) Same object, identical environmental conditions

4.3 Dimensioned and connection drawings

All ODSL 30 variants

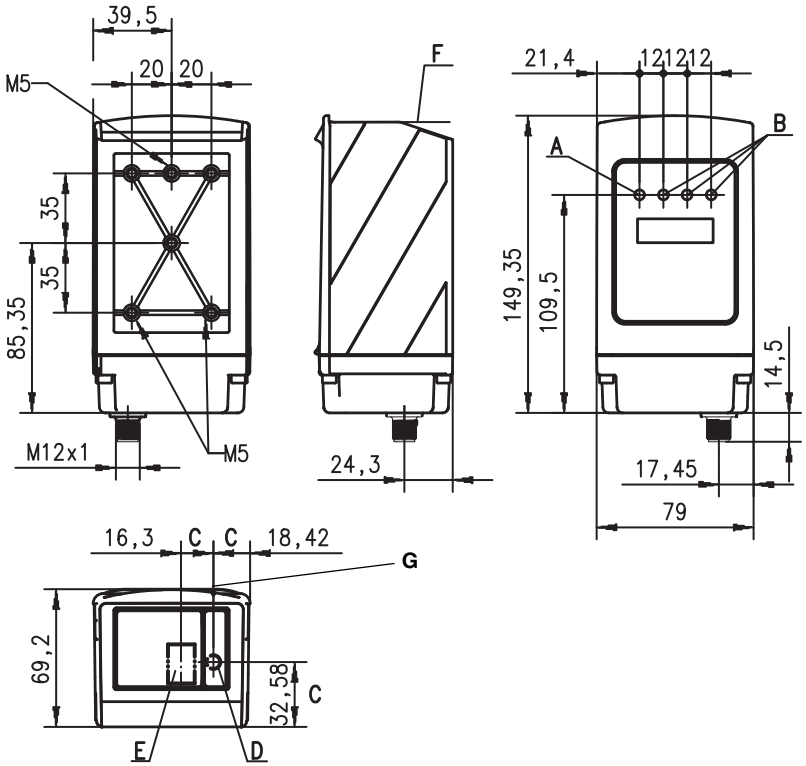

A 1 green indicator diode / ready
B 3 indicator diodes yellow/switching outputs Q1, Q2, Q3
C Optical axes
D Transmitter
E Receiver
F Reference edge for the measurement (distance zero point)
G Sight for coarse alignment

Figure 4.1: Dimensioned drawing ODSL 30 variants

ODSL 30/V… (analogue output)

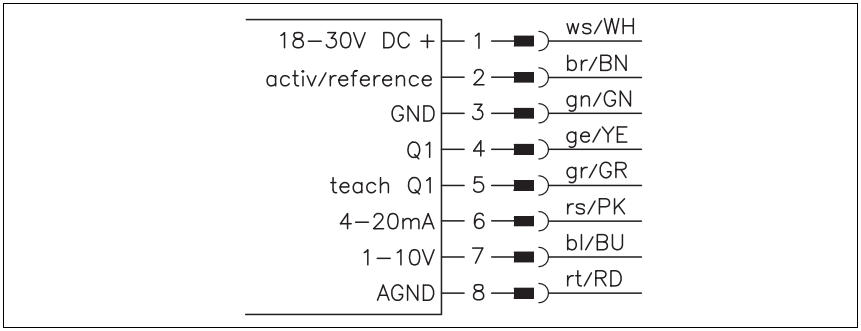

Figure 4.2: Electrical Connection ODSL 30/V…

ODSL 30/24… (3 switching outputs)

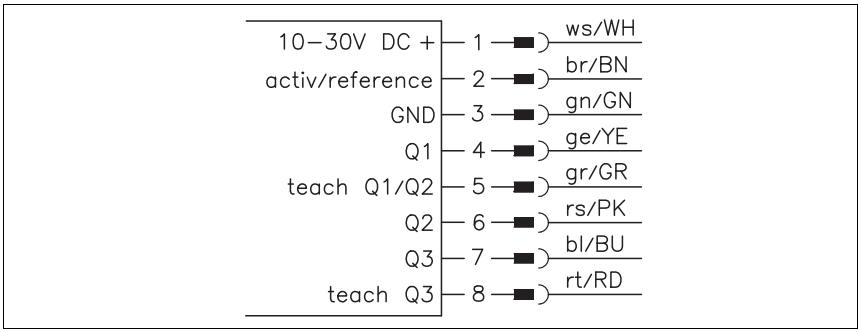

Figure 4.3: Electrical Connection ODSL 30/24…

ODSL 30/D 232… (digital output RS 232)

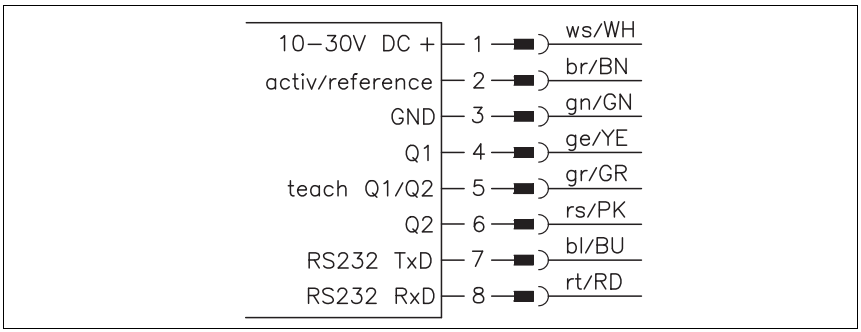

Figure 4.4: Electrical Connection ODSL 30/D 232…

ODSL 30/D 485… (digital output RS 485)

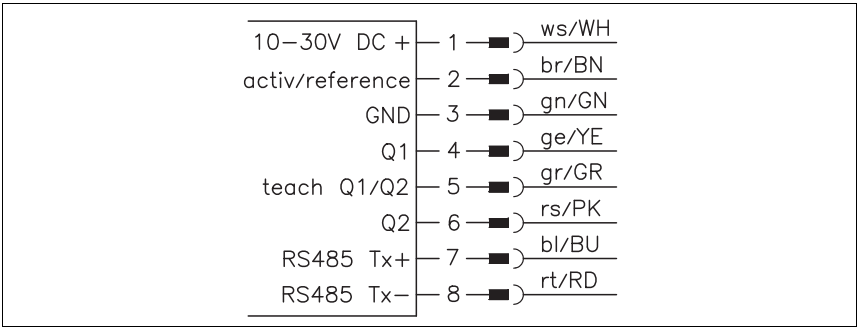

Figure 4.5: Electrical Connection ODSL 30/D 485…

Attention

For UL applications, use is only permitted in class 2 circuits in accordance with the NEC (National Electric Code).

5 Type overview and accessories

5.1 Type overview

Designation	Order no.	Description
ODSL 30/V-30M-S12	50039447	Measurement range 0 … 30000mm, analog current/voltage output, 1 configurable switching output, laser class 2
ODSL 30/24-30M-S12	50040720	Measurement range: 0 … 30000mm 3 configurable switching outputs, laser class 2
ODSL 30/D232-30M-S12	50041203	Measurement range 0 … 65000mm, RS 232 serial interface, two configurable switching outputs, laser class 2
ODSL 30/D485-30M-S12	50041204	Measurement range 0 … 65000mm, RS 485 serial interface, two configurable switching outputs, laser class 2

Table 5.1: ODSL 30 type overview

5.2 Accessories

The following accessories are available for the ODSL 30:

Designation	Order no.	Short descriptions
Connection cables		
K-D M12A-8P-2m-PUR	50104591	Connection cable M12, 8-pin, axial, length 2m
K-D M12A-8P-5m-PUR	50104590	Connection cable M12, 8-pin, axial, length 5m
K-D M12A-8P-10m-PUR	50106882	Connection cable M12, 8-pin, axial, length 10m
CB-M12-15000E-8G	678062	Connection cable M12, 8-pin, axial, length 15m
CB-M12-25000E-8G	678063	Connection cable M12, 8-pin, axial, length 25m
CB-M12-50000E-8G	678064	Connection cable M12, 8-pin, axial, length 50m
User-configurable connectors		
KD 01-8-BA	50112157	M12 connector (socket), 8-pin, axial
Cooperative target		
CTS 100x100	50104599	Cooperative target, luminosity coefficient 50 … 90%
PC accessories		
UPG 5 [1)]	50039627	PC-adapter for ODSL30
ODS software [2)]	Free download from *www.leuze.com*	Software for measurement value visualization of the ODSL 30
Accessories for fieldbus connection for ODSL 30/D232-30M-S12 with RS 232 interface		
MA 204i	50112893	Modular fieldbus connection for field use, interfaces: RS232 / PROFIBUS DP
MA 208i	50112892	Modular fieldbus connection for field use, interfaces: RS232 / Ethernet TCP/IP
MA 235i	50114154	Modular fieldbus connection for field use, interfaces: RS232 / CANopen
MA 238i	50114155	Modular fieldbus connection for field use, interfaces: RS232 / EtherCAT
MA 248i	50112891	Modular fieldbus connection for field use, interfaces: RS232 / PROFINET-IO
MA 255i	50114156	Modular fieldbus connection for field use, interfaces: RS232 / DeviceNet
MA 258i	50114157	Modular fieldbus connection for field use, interfaces: RS232 / Ethernet/IP
K-DS M12A-MA-8P-3m-S-PUR	50115050	Connection cable for ODSL 30/D232-30M-S12 with RS232 to modular interfacing units MA 2xxi, cable length 3 m

Table 5.2: Accessories ODSL 30

1) Required for the visualization of the measurement values via the ODS software.
2) With the ODSL 30…, this can only be used exclusively for the visualization of measurement values on the PC; configuration is not possible!

Notice

In connection with the ODSL 30, the software can only be used for the display of measurement values, but not for the configuration of the device.

6 Installation

6.1 Storage, transportation

Unpacking

- Check the packaging for any damage. If damage is found, notify the post office or shipping agent as well as the supplier.
- Check the delivery contents using your order and the delivery papers:
  - Delivered quantity
  - Device variant and model as indicated on the nameplate
  - Accessories
  - Operating manual
- Save the original packaging for later storage or shipping.

If you have any questions concerning your shipment, please contact your supplier or your local Leuze electronic sales office.

- Observe the applicable local regulations when disposing of the packaging materials.

6.2 Mounting

Notice

The mounting device BT 30 is already included in the delivery package of the ODSL 30.

View through a chase

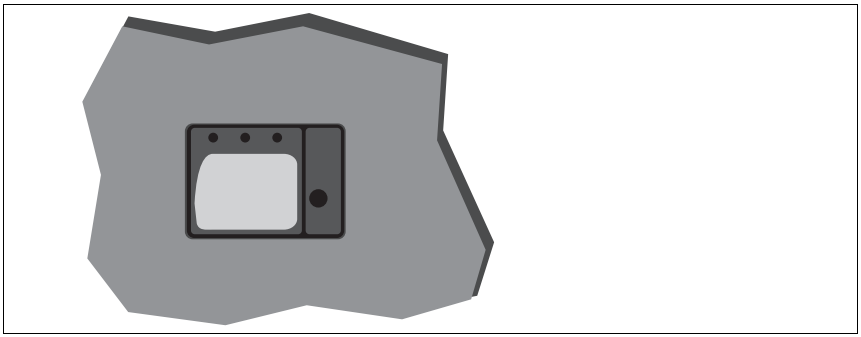

Figure 6.1: View through a chase

If the ODSL 30 has to be installed behind a cover, the chase has to have at least the size of the optical glass cover. Otherwise, a correct measurement is not possible or can not be guaranteed.

6.3 Teach-in

You can adjust the upper switching points by means of teach-in; with the ODSL 30/V…, you can also set the characteristic output curve of the analogue output by means of teach-in. For teach-in, there are differences among the various device variants:

Teach procedure for ODSL 30/V… (1 switching output)

↳ Position the measurement object at the desired distance. Connect the teach input **teach Q1** for ≥ 2 sec. to $+U_B$. After that, connect the teach input to GND. The switching output is taught.

Teaching takes place towards the switching point.

These default values are preset:

- Function characteristics of the switching output: "light switching"
- Lower switching point: 199 mm
- Upper switching point: 1000 mm
- Hysteresis: 20 mm

You can change these values using the keypad and LC display.

Teach-in of the characteristic output curve of the ODSL 30/V…

In addition to the edge-controlled teach-in (`slope control`) of the switching outputs, teach-in of the characteristic output curve is also possible via a teach line for devices with software version V01.10 and newer (see chapter 3.6.5). The following steps are required for the line teach-in of the analogue characteristic curve:

1. Activation of the analogue line teach function via the keypad and menu.
   Activate `Input Menu` -> `Teach Mode` -> `Teach Mode time control`.
2. Position measurement object at the desired measurement distance.
3. The respective teach function is activated by applying the active level (default $+U_B$) to the teach input "Teach Q1" (pin 5). The teach event is indicated by the flashing of the LEDs and on the display.

Teach function	Duration of teach signal	Green LED	Yellow LED
Upper switching point switching output Q1	2 … 4 s	flash synchronously	
Distance value for analogue output 1 V / 4 mA	4 … 6 s	continuous light	flashing
Distance value for analogue output 10 V / 20 mA	6 … 8 s	flashing	continuous light

4. To finish the teach event, disconnect the teach input from the teach signal after the desired time.
5. A successful teach event is signaled by the end of the flashing of the LEDs. The menu entries can be used to check that the teach values are properly accepted and to make any changes.

Error messages

Rapid flashing of the green LED following a teach event indicates an unsuccessful teach event. The sensor remains ready for operation and continues to function with the old values.

Remedy:

- Repeat teach event **or**
- Activate teach input for more than 8 s **or**
- Disconnect sensor from voltage to restore the old values.

Teach procedure for ODSL 30/D… (2 switching outputs)

- Position the measured object at the first desired distance. Connect the teach input **teach Q1/Q2** for ≥ 2 sec. to $+U_B$. The LEDs are flashing simultaneously. Reconnect the teach input to GND. The first switching output is taught.
- Now, position the measured object at the second desired distance. Connect the teach input **teach Q1/Q2** for ≥ 2 sec. to $+U_B$. The LEDs now flash alternately. Reconnect the teach input to GND. The second switching output is taught. In non-operational mode, the teach input is connected to GND.

Teaching takes place towards the switching points.

These default values are preset:

- Function characteristics of the switching outputs: "light switching"
- Lower switching point Q1: 199 mm, lower switching point Q2: 199 mm
- Upper switching point Q1: 1000 mm, upper switching point Q2: 1500 mm
- Hysteresis: 20 mm each

You can change these values using the keypad and LC display.

Teach procedure for ODSL 30/24… (3 switching outputs)

- Switching outputs Q1/Q2: Teach procedure is the same as for ODSL 30/D…
- Switching output Q3: Teach procedure is the same as for ODSL 30/V… via teach input **teach Q3**

Teaching takes place towards the switching points.

These default values are preset:

- Function characteristics of the switching outputs: "light switching"
- Lower switching point Q1: 199 mm, lower switching point Q2: 199 mm, lower switching point Q3: 199 mm
- Upper switching point Q1: 1000 mm, upper switching point Q2: 1500 mm, upper switching point Q3: 2000 mm
- Hysteresis: 20 mm each

You can change these values using the keypad and LC display.

7 Software

General description

The ODS 96 configuration software can be used with a connected ODSL 30 to display measurement values.

The software is available via download from *www.leuze.de*.

Notice

In connection with the ODSL 30, the ODS 96 configuration software can only be used for the display of measurement values, but not for the configuration of the device. For this purpose, the left arrow key (up arrow) on the keypad must be pressed while the device is switched on. After that, the ODSL 30 is in PC configuration mode.

7.1 Connecting to a PC

7.1.1 Connection of the ODSL 30 to a PC

The ODSL 30 is connected to a PC via the programming terminal UPG 5. The terminal is simply inserted between the ODSL 30 and the connection cable. The UPG 5 is connected to the PC via the serial interface cable that ships with the UPG 5.

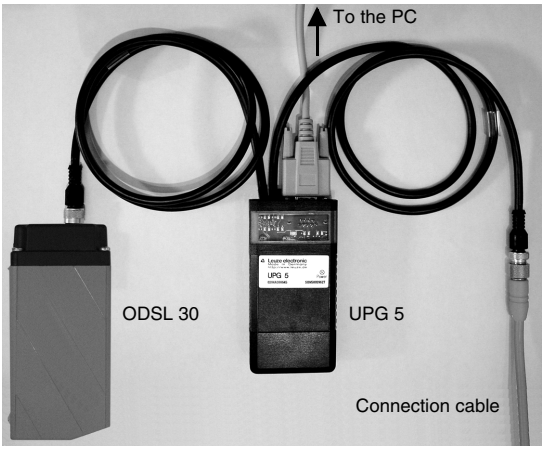

Figure 7.1: Connection of the ODSL 30 to a PC via the programming terminal UPG 5

Notice

The measurement values of the ODSL 30 can visualized on the PC using the ODS 96 configuration software. However, a configuration of the device via the ODS 96 configuration software is not possible. Visualization of the measurement values is only possible up to 15m!

7.2 Installation of the ODS 96 configuration software

Requirements for the installation of the configuration software:

- Windows 95/98/NT/2000/XP,
- 486 processor or faster,
- 4 MByte RAM,
- 2 MByte free disk space
- and a CD-ROM drive.

Starting the installation file

- Insert the installation CD into your CD drive.
- Choose **Start** → **Run**. Insert drive and name of the installation file (e.g.: d:\setup.exe) and hit **OK**.
- In the following window, define the path for the installation directory and confirm with **End**.

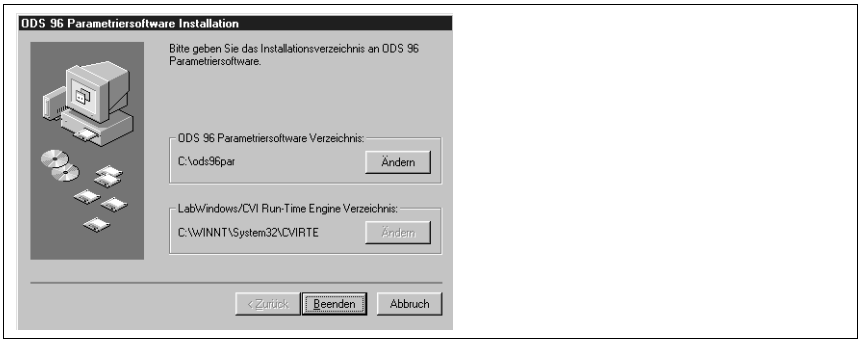

Figure 7.2: Installation directory

- Follow the installation routine.

7.3 Starting the program

After successful installation and restart of the computer, the configuration software is ready to use.

- Select the ODS 96B configuration software icon from the program group.

Without connected ODSL 30, the following window appears after the program start, letting you choose a device:

Additional window without connected ODSL 30

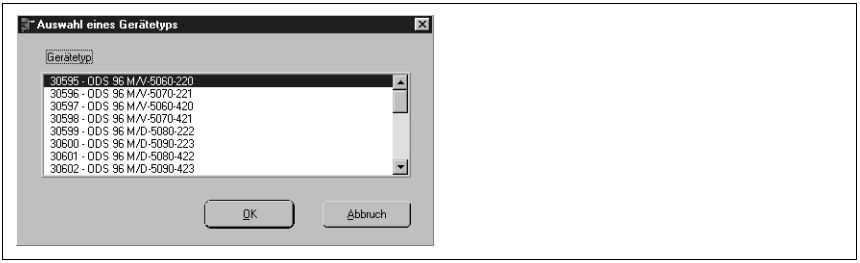

Figure 7.3: Device selection

If an ODSL 30… is connected, the following window appears:

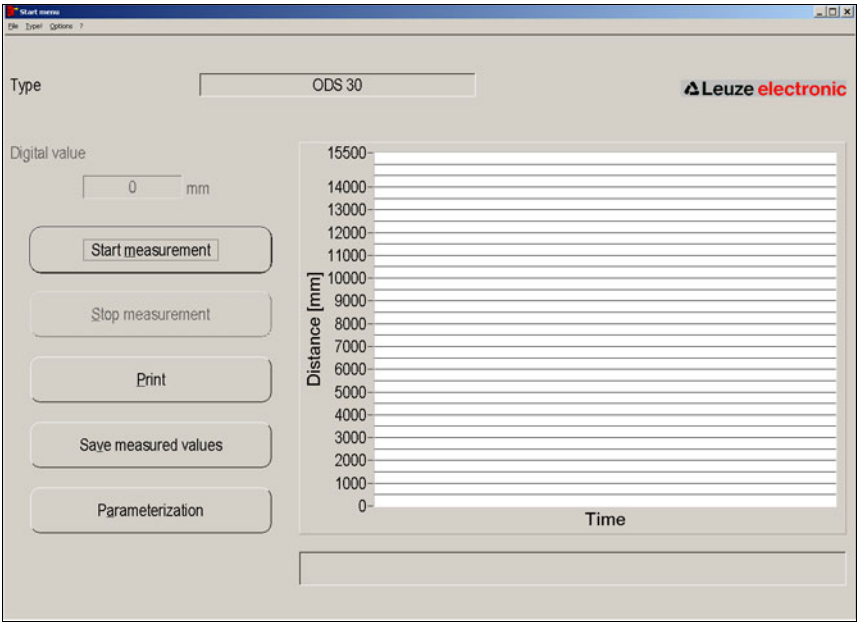

Figure 7.4: Start menu before measurement

The software automatically recognises the connected sensor with its default settings.

7.3.1 Description of the Menu Commands

Menu item "File"

Under menu item **File** you can switch to configuration mode or quit the program.

Menu item "Type!"

The menu item **Type!** is used for the default setting of parameters and the generation of configuration files without an ODS being connected. It lets you choose a device variant that you wish to configure.

Menu item "Options"

The following three possibilities are offered under **Options**:

- **Language selection** to choose the language for dialog.
- **Interface** to choose the port to which the cable to the ODSL 30 is connected (standard: COM 1). The configuration software automatically recognizes the interface used. Choosing a different port could become necessary if more than one sensor is connected.
- **Change password**: first enter your old, then your new password and confirm with **OK**.

Menu item "?"

Choose **About…**, for information on ODS 96 configuration software (product, program, device version, as well as for the address of Leuze electronic).

ПРОМЭЛЕКТРОНИКА / sales@prom-elec.com

7.3.2 Trade shows

By clicking the button **Start measurement**, the current measurement data of the connected ODSL 30 are transmitted and plotted in the adjacent diagram as a function of time.

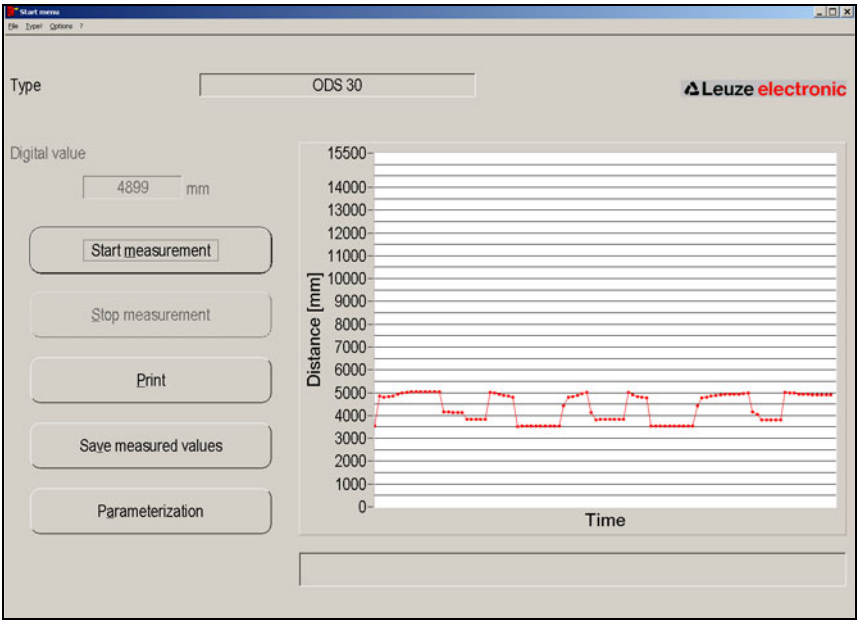

Figure 7.5: Display of the current measurement values of the ODSL 30 connected

By clicking the button **Stop Measurement**, you terminate the transmission of the measurement values from the ODSL 30 and freeze the measurement diagram.

With a subsequent click on the button **Print**, the diagram is output on your standard Windows printer.