Leuze

Original operating instructions

MLD 300, MLD 500

Multiple light beam safety devices

SAFE IMPLEMENTATION AND OPERATION

The Sensor People

We reserve the right to make technical changes
EN 2020/05/28 - 607342

ПРОМЭЛЕКТРОНИКА / sales@prom-elec.com

© 2020
Leuze electronic GmbH + Co. KG
In der Braike 1
D-73277 Owen / Germany
Phone: +49 7021 573-0
Fax: +49 7021 573-199
http://www.leuze.com
info@leuze.de

1 About this document . . . 6
1.1 Used symbols and signal words . . . 6
1.2 Checklists . . . 6

2 Safety . . . 7
2.1 Intended use and foreseeable misuse . . . 7
2.1.1 Intended use . . . 7
2.1.2 Using the laser alignment aid . . . 8
2.1.3 Foreseeable misuse . . . 11
2.2 Necessary competencies . . . 11
2.3 Responsibility for safety . . . 11
2.4 Exemption of liability . . . 12

3 Device description . . . 13
3.1 Device overview . . . 13
3.2 Connection technology . . . 14
3.2.1 AS-i parameter port . . . 15
3.3 Display elements . . . 15
3.3.1 Operating indicators on the transmitter . . . 15
3.3.2 Operation indicators on the receiver . . . 16
3.3.3 7-segment display at the receiver . . . 17
3.3.4 Multicolor indicator . . . 18
3.4 Integrated laser alignment aid . . . 19

4 Functions . . . 21
4.1 Start/restart interlock . . . 21
4.2 Contactor monitoring . . . 22
4.3 Signal output . . . 22
4.4 Range switching . . . 22
4.5 MultiScan mode . . . 22
4.6 Periodic function test . . . 22
4.7 Muting . . . 23
4.7.1 Timing controlled 2-sensor muting . . . 23
4.7.2 Sequence controlled 2-sensor muting (exit) . . . 24
4.7.3 Timing controlled 4-sensor muting . . . 24
4.7.4 Muting timeout . . . 25
4.7.5 Muting restart . . . 26
4.7.6 Alternative connection for second muting signal . . . 26
4.7.7 Muting-enable . . . 27
4.7.8 Partial muting . . . 28
4.7.9 Muting operating modes . . . 28

5 Applications . . . 30
5.1 Access guarding . . . 30

6 Mounting . . . 33
6.1 Arrangement of transmitter and receiver . . . 33
6.1.1 Arrangement of 1-beam safety sensors . . . 33
6.1.2 Beam heights and ranges . . . 34
6.1.3 Calculating the safety distance . . . 34
6.1.4 Calculation of the safety distance for vertical protective fields with reaching over . . . 35
6.1.5 Minimum distance to reflective surfaces . . . 37
6.1.6 Preventing mutual interference between adjacent devices . . . 38
6.2 Arrangement of the muting sensors . . . 39

6.2.1 Basic information . . . 40
6.2.2 Selecting optoelectronic muting sensors . . . 40
6.2.3 Minimum distance for optoelectronic muting sensors . . . 40
6.2.4 Arrangement of the muting sensors for timing controlled 2-sensor muting . . . 40
6.2.5 Arrangement of the muting sensors for sequence controlled 2-sensor muting . . . 42
6.2.6 Arrangement of the muting sensors for timing controlled 4-sensor muting . . . 44
6.3 Mounting the safety sensor . . . 46
6.3.1 Suitable mounting locations . . . 46
6.3.2 Swivel mount BT-SET-240 (optional) . . . 46
6.3.3 BT-P40 clamp bracket (optional) . . . 48
6.3.4 BT-2SB10 clamp swiveling mounting bracket (optional) . . . 48

7 Electrical connection . . . 49
7.1 Pin assignment transmitter and receiver . . . 49
7.1.1 Standard pin assignment . . . 49
7.1.2 Pin assignment of local socket . . . 51
7.1.3 AS-i pin assignment . . . 52
7.1.4 AS-i signal assignment . . . 52
7.2 Selecting contactor monitoring and start/restart interlock . . . 53
7.3 Selecting the muting operating modes . . . 55
7.3.1 Operating mode 1 (muting): . . . 57
7.3.2 Operating mode 2 (muting timeout 100 h): . . . 59
7.3.3 Operating mode 3 (sequence controlled 2-sensor muting): . . . 60
7.3.4 Operating mode 4 (sequence controlled 2-sensor muting with muting timeout 100 h): . . . 61
7.3.5 Operating mode 5 (muting-enable): . . . 62
7.3.6 Operating mode 6 (partial muting): . . . 63

8 Starting up the device . . . 65
8.1 Switching on . . . 65
8.2 AS-i connection start-up . . . 65
8.2.1 Initial commissioning . . . 65
8.2.2 Exchange of AS-i slaves . . . 66
8.3 Aligning the safety sensor . . . 66
8.4 Aligning without integrated laser alignment aid . . . 67
8.5 Aligning with integrated laser alignment aid . . . 67
8.5.1 Required devices and tools . . . 68
8.5.2 Aligning without UDC device columns and without UMC deflecting mirror columns . . . 68
8.5.3 Aligning with UDC device columns and with UMC deflecting mirror columns . . . 70
8.6 Start/restart button . . . 73
8.6.1 Unlocking start/restart interlock . . . 73
8.6.2 Muting restart . . . 74

9 Testing . . . 75
9.1 Before the initial start-up and following modifications . . . 75
9.1.1 Checklist – before the initial start-up . . . 76
9.2 To be performed periodically by competent persons . . . 77
9.3 Periodically by the operator . . . 77
9.3.1 Checklist – periodically by the operator . . . 78
9.4 Annual testing of safe switch-off of the AS-i connection . . . 78

10 Maintenance . . . 79

11 Troubleshooting . . . 80
11.1 What to do in case of failure? . . . 80
11.2 Operating indicators of the LEDs . . . 80

11.3 Error messages 7-segment display . . . 81
11.4 Multicolor indicator . . . 84
11.5 Error message query via AS-Interface . . . 84

12 Disposing . . . 85

13 Service and support . . . 86

14 Technical data . . . 87
14.1 General specifications . . . 87
14.2 Dimensions, weights . . . 90
14.3 Dimensioned drawings: Accessories . . . 93

15 Order guide and accessories . . . 98

16 EC Declaration of Conformity . . . 126

1 About this document

1.1 Used symbols and signal words

Table 1.1: Warning symbols and signal words

⚠	Symbol indicating dangers to persons
NOTE	Signal word for property damage Indicates dangers that may result in property damage if the measures for danger avoidance are not followed.
CAUTION	Signal word for minor injuries Indicates dangers that may result in minor injury if the measures for danger avoidance are not followed.
WARNING	Signal word for serious injury Indicates dangers that may result in severe or fatal injury if the measures for danger avoidance are not followed.
DANGER	Signal word for life-threatening danger Indicates dangers with which serious or fatal injury is imminent if the measures for danger avoidance are not followed.

Table 1.2: Other symbols

ℹ	Symbol for tips Text passages with this symbol provide you with further information.
↳	Symbol for action steps Text passages with this symbol instruct you to perform actions.

Table 1.3: Terms and abbreviations

AOPD	Active Optoelectronic Protective Device **A**ctive **O**pto-electronic **P**rotective **D**evice
EDM	**E**xternal **D**evice **M**onitoring
MTTF	Mean time to dangerous failure **M**ean **T**ime **T**o **F**ailure
OSSD	**O**utput **S**ignal **S**witching **D**evice
SIL	Safety Integrity Level
RES	Start/**RES**tart interlock
PFH	Probability of a dangerous failure per hour **P**robability of dangerous **F**ailure per **H**our
PL	**P**erformance **L**evel

1.2 Checklists

The checklists (see chapter 9) serve as a reference for the machine manufacturer or supplier. They replace neither testing of the complete machine or system prior to initial commissioning nor their periodic testing by a qualified person (see chapter 2.2). The checklists contain minimum testing requirements. Depending on the application, other tests may be necessary.

2 Safety

Before using the safety sensor, a risk assessment must be performed according to valid standards (e.g. EN ISO 12100:2011-03, EN ISO 13849.1: 2016-06, DIN EN 62061:2016-05). The result of the risk assessment determines the required safety level of the safety sensor (see table 14.2).

For mounting, operating and testing, this document as well as all applicable national and international standards, regulations, rules and directives must be observed. Relevant and supplied documents must be observed, printed out and handed to affected persons.

↳ Before working with the safety sensor, completely read and observe the documents applicable to your task.

In particular, the following national and international legal regulations apply for the commissioning, technical inspections and work with safety sensors:

- Machinery directive 2006/42/EC
- Low voltage directive 2014/35/EU
- EMC directive 2014/30/EU
- Use of work equipment directive 89/655/EEC supplemented by directive 95/63 EC
- OSHA 1910 Subpart O
- Safety regulations
- Accident-prevention regulations and safety rules
- Ordinance on Industrial Safety and Health and employment protection act
- Product Safety Law (ProdSG and 9. ProdSV)

	NOTE
ℹ	For safety-related information you may also contact local authorities (e.g., industrial inspectorate, employer's liability insurance association, labor inspectorate, occupational safety and health authority).

2.1 Intended use and foreseeable misuse

	⚠ WARNING!
⚠	**A running machine may result in serious injury!** ↳ Make certain that the safety sensor is correctly connected and that the protective function of the protective device is ensured. ↳ Make certain that, during all conversions, maintenance work and inspections, the system is securely shut down and protected against being restarted.

2.1.1 Intended use

- The safety sensor may only be used after it has been selected in accordance with the respectively applicable instructions and relevant standards, rules and regulations regarding labor protection and safety at work, and after it has been installed on the machine, connected, commissioned, and checked by competent persons (see chapter 2.2).
- When selecting the safety sensor it must be ensured that its safety-related capability meets or exceeds the required performance level PL_r ascertained in the risk assessment.

Multiple light beam safety devices of the MLD series are not intended for use in the following environmental conditions:

- In environments with high air humidity in which condensation can occur
- In environments in which the product is in direct contact with water
- In environments in which fogging and ice can form on the front screen of the device

The following table shows the safety-related characteristic parameters of the MLD 300 and MLD 500 series.

Table 2.1: Models and safety-related characteristic parameters for the MLD 300 and MLD 500 series

Model	MLD 312 (for external testing)	MLD 300	MLD 500
Type in accordance with EN IEC 61496-1, -2	Type 2	Type 2	Type 4
SIL in accordance with IEC 61508		SIL 1	SIL 3
SILCL in accordance with EN IEC 62061	-	SILCL 1	SILCL 3
Performance Level (PL) in accordance with EN ISO 13849-1	Up to PL c [a)]	PL c	PL e
Category in accordance with EN ISO 13849-1	Category 2	Category 3	Category 4
Probability of a dangerous failure per hour	PFH_d=1.2 x 10^{-8} [b)]	PFH_d=1.2 x 10^{-8}	PFH_d=6.6 x 10^{-9} [c)]
$MTTF_d$	204 years		

a) with a respective safety monitoring device (e.g., Leuze MSI-T), with DC_{avg} ³ medium

b) during an external test with DC > 90 %, e.g., with a MSI-T Leuze safety monitoring device

c) or 6.0 x 10E-9 with MLD/AS-i

- The safety sensor protects persons at access points of machines and systems.
- The safety sensor detects persons only when they enter the danger zone but cannot tell whether there are any persons inside the danger zone. For this reason, a start/restart interlock in the safety chain is essential.
- The construction of the safety sensor must not be altered. When manipulating the safety sensor, the protective function is no longer guaranteed. Manipulating the safety sensor also voids all warranty claims against the manufacturer of the safety sensor.
- The safety sensor must be periodically tested by persons with the necessary competence (see chapter 2.2).
- The safety sensor must be exchanged after a maximum of 20 years. Repairs or the exchange of wear parts do not extend the mission time.

2.1.2 Using the laser alignment aid

The optional internal laser alignment aid is available for transmitter-receiver systems.

Laser alignment aids must only be switched on for the purpose of alignment or testing the alignment of transmitters, receivers and deflecting mirror columns.

⚠ ATTENTION, LASER RADIATION – CLASS 2 LASER PRODUCT	
	Do not stare into beam! The device satisfies the requirements of IEC 60825-1:2007 (EN 60825-1:2007) safety regulations for a product of **laser class 2** as well as the U.S. 21 CFR 1040.10 regulations with deviations corresponding to "Laser Notice No. 50" from June 24, 2007. ↳ Never look directly into the laser beam or in the direction of reflected laser beams! If you look into the beam path over a longer time period, there is a risk of injury to the retina. ↳ Do not point the laser beam of the device at persons! ↳ Interrupt the laser beam using a non-transparent, non-reflective object if the laser beam is accidentally directed towards a person. ↳ When mounting and aligning the device, avoid reflections of the laser beam off reflective surfaces! ↳ CAUTION! Use of controls or adjustments or performance of procedures other than specified herein may result in hazardous light exposure. ↳ Observe the applicable statutory and local laser protection regulations. ↳ The device must not be tampered with and must not be changed in any way. There are no user-serviceable parts inside the device. Repairs must only be performed by Leuze electronic GmbH + Co. KG.

⚠ WARNING!	
	Faulty or incorrect alignment may result in an operating fault! Adjustment work with lasers must be carried out by competent and instructed persons only (see chapter 2.2).

↳ Do not switch on the laser if persons are present in the laser path.

↳ Inform persons in the vicinity before embarking on alignment work with lasers.

↳ After switch-on the laser lights up for about 10 minutes. Do not leave the installation site during this time.

NOTE	
	Affix laser information and warning signs! Included with the device are self-adhesive laser warning and laser information signs (stick-on labels) in multiple languages (see figure 2.2). ↳ Affix the laser information sheet to the device in the language appropriate for the place of use. When using the device in the U.S.A., use the stick-on label with the "Complies with 21 CFR 1040.10" notice. ↳ Affix the laser information and warning signs near the device if no signs are attached to the device (e.g. because the device is too small) or if the attached laser information and warning signs are concealed due to the installation position. Affix the laser information and warning signs so that they are legible without exposing the reader to the laser radiation of the device or other optical radiation.

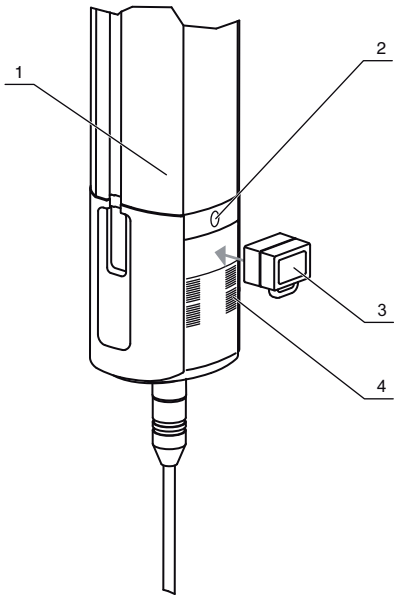

1 Transmitter
2 Laser aperture
3 MagnetKey
4 Beam marking

Figure 2.1: Position of the laser aperture

Figure 2.2: Laser warning and information signs – supplied stick-on labels

2.1.3 Foreseeable misuse

Any use other than that defined under the “Approved purpose” or which goes beyond that use is considered improper use.

In principle, the safety sensor is **not** suitable as a protective device for use in the following cases:

- Danger posed by ejected objects or the spraying of hot or hazardous liquids from within the danger zone
- Applications in explosive or easily flammable atmospheres
- Reachability of the point of operation by hand from the installation site of the safety sensor
- Detection of the presence of persons in danger zones

2.2 Necessary competencies

The safety sensor may only be configured, installed, connected, commissioned, serviced and tested in its respective application by persons who are suitably qualified for the given task. General prerequisites for suitably qualified persons:

- They have a suitable technical education.
- They are familiar with the relevant parts of the operating instructions for the safety sensor and the operating instructions for the machine.

Task-specific minimum requirements for suitably qualified persons:

Configuration
Specialist knowledge and experience in the selection and use of protective devices on machines as well as the application of technical rules and the locally valid regulations on labor protection, safety at work and safety technology.

Mounting
Specialist knowledge and experience needed for the safe and correct installation and alignment of the safety sensor with regard to the respective machine.

Electrical installation
Specialist knowledge and experience needed for the safe and correct electrical connection as well as safe integration of the safety sensor in the safety-related control system.

Operation and maintenance
Specialist knowledge and experience needed for the regular inspection and cleaning of the safety sensor – following instruction by the person responsible.

Servicing
Specialist knowledge and experience in the mounting, electrical installation and the operation and maintenance of the safety sensor in accordance with the requirements listed above.

Commissioning and testing

- Commissioning and testing: experience and specialist knowledge in the rules and regulations of labor protection, safety at work and safety technology that are necessary for being able to assess the safety of the machine and the use of the safety sensor, including experience with and knowledge of the measuring equipment necessary for performing this work.
- In addition, a task related to the subject matter is performed in a timely manner and knowledge is kept up to date through continuous further training - „Competent person“ in terms of the German Betriebssicherheitsverordnung (Ordinance on Industrial Safety and Health) or other national legal regulations.

2.3 Responsibility for safety

Manufacturer and operator must ensure that the machine and implemented safety sensor function properly and that all affected persons are adequately informed and trained.

The type and content of all imparted information must not lead to unsafe actions by users.

The manufacturer of the machine is responsible for:

- Safe machine construction
- Safe implementation of the safety sensor, verified by the initial test performed by a competent person (see chapter 2.2 "Necessary competencies")
- Imparting all relevant information to the operating company
- Adhering to all regulations and directives for the safe commissioning of the machine

The operator of the machine is responsible for:

- Instructing the operator
- Maintaining the safe operation of the machine
- Adhering to all regulations and directives for labor protection and safety at work
- Periodic testing by a competent person (see chapter 2.2 "Necessary competencies")

2.4 Exemption of liability

Leuze electronic GmbH + Co. KG is not liable in the following cases:

- Safety sensor is not used as intended.
- Safety notices are not adhered to.
- Reasonably foreseeable misuse is not taken into account.
- Mounting and electrical connection are not properly performed.
- Proper function is not tested (see chapter 9 "Testing").
- Changes (e.g., constructional) are made to the safety sensor.

3 Device description

The safety sensors of the MLD 300 and MLD 500 series are active optoelectronic protective devices, each with two fail-safe OSSDs. They satisfy the following standards:

- Performance Level PL c and PL e in accordance with EN ISO 13849-1
- Safety category 2, 3 and 4 in accordance with EN ISO 13849-1
- Safety Integrity Level SIL 1 and SIL 3 in accordance with IEC 61508 and EN IEC 62061
- Type 2 and type 4 in accordance with EN IEC 61496-1, EN IEC 61496-2

The safety sensors are available as transmitter-receiver systems (1-, 2-, 3- and 4-beam) or as transceiver systems (2- and 3-beam).
Infrared LEDs classified in the exempt group in acc. with EN 62471:2008 are used as light sources. They are protected against overvoltage and overcurrent acc. to IEC 60204-1 (protection class 3). Infrared beams are modulated in specially shaped pulse packets in such a way that they can be distinguished from ambient light (e.g. welding sparks, warning lights) and, thus, not be affected by it.

3.1 Device overview

The following tables provide an overview over the device models' functions of the MLD 300 and MLD 500 series.

Table 3.1: Models and functions of the MLD 300 series

	Transmitter	Receiver/transceiver			
	MLD 300	MLD 310	MLD 312	MLD 320	MLD 330 MLD 335
OSSDs		2	1	2	2
Automatic start/restart		●	●	●	
RES				●[a)]	●
EDM				●[b)]	●[b)]
Signal output				●	●
LED indicator	●	●	●	●	●
7-segment display					●
Integrated muting					●

a) RES selectable

b) EDM selectable

Table 3.2: Models and functions of the MLD 500 series

	Transmitter		Receiver/transceiver			
	MLD 500	MLD 500/ AS-i	MLD 510	MLD 520	MLD 530 MLD 535	MLD 510/ AS-i
OSSDs			2	2	2	
Automatic start/restart			●	●		●
RES				●[a)]	●	
EDM				●[b)]	●[b)]	
Signal output				●	●	

	Transmitter		Receiver/transceiver			
	MLD 500	MLD 500/ AS-i	MLD 510	MLD 520	MLD 530 MLD 535	MLD 510/ AS-i
LED indicator	●	●	●	●	●	●
7-segment display					●	
Integrated muting					●	

a) RES selectable

b) EDM selectable

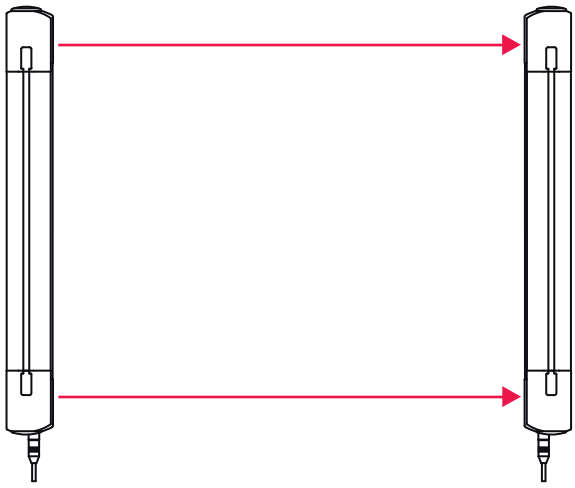

Figure 3.1: Transmitter-receiver system

The transmitter-receiver system consists of one transmitter and one receiver.

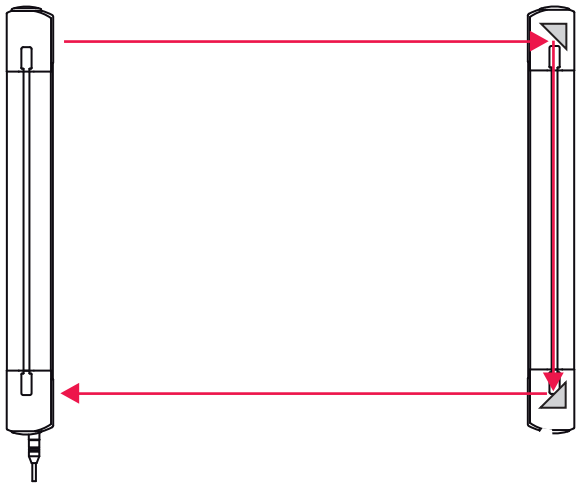

Figure 3.2: Transceiver system

The transceiver system consists of an active transceiver (transmitter/receiver) and a passive deflecting mirror (no electrical connection, deflects the light beams by 2 x 90°).

3.2 Connection technology

Transmitter and receiver are equipped with M12 round pin plugs that differ in pin number depending on device model:

Device model	Number of pins on the receiver/ transceiver	Number of pins on the trans-mitter
MLD 310, MLD 510	5-pin connector	5-pin connector
MLD 312	5-pin connector	5-pin connector
MLD 320, MLD 520	8-pin connector	5-pin connector
MLD 330, MLD 530	8-pin plug and 5-pin socket	5-pin connector
MLD 335, MLD 535	8-pin plug and 8-pin socket	5-pin connector
MLD 500/AS-i, MLD 510/AS-i	5-pin connector	5-pin connector
MLD 510-...I/O	5-pin plug and separate 5-pin socket for external muting indicator	5-pin connector

3.2.1 AS-i parameter port

The parameter port can only be addressed by the bus master. MLD/A1 delivers a safety at work-specific code sequence which the AS-i safety monitor teaches in and permanently monitors. In addition, the bus master has the option of reading the interfering signal via the parameter port and controlling an internal or external muting display via the cyclical output data (see chapter 7.1.3).

3.3 Display elements

The display elements of the safety sensors simplify start-up and fault analysis.

3.3.1 Operating indicators on the transmitter

There is a green LED at each light axis of the transmitter serving as a function indicator.

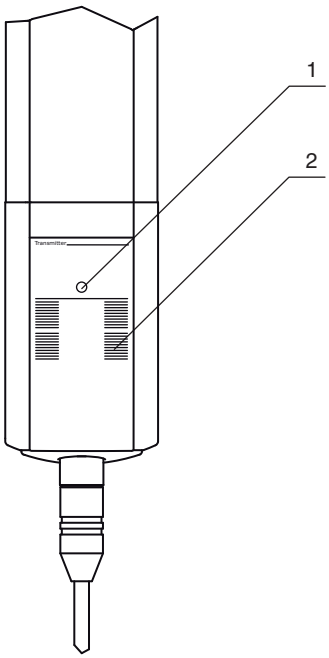

1 LED
2 Beam marking

Figure 3.3: Green LED on each transmitter light axis for function indication

Table 3.3: Meaning of the LED

LED	Description
Green	Transmitted beam active
Off	Error (transmitted beam inactive)

3.3.2 Operation indicators on the receiver

The receiver has a LED (LED1, red or green). The following device models have additional display elements at the receiver:

Table 3.4: Additional display elements at the receiver

	Receiver/transceiver								
	MLD 310	MLD 312	MLD 320	MLD 330	MLD 335	MLD 510	MLD 520	MLD 530	MLD 535
LED2 (yellow)			●	●	●		●	●	●
7-segment display				●	●			●	●
Muting indicators (optional)				●	●			●	●

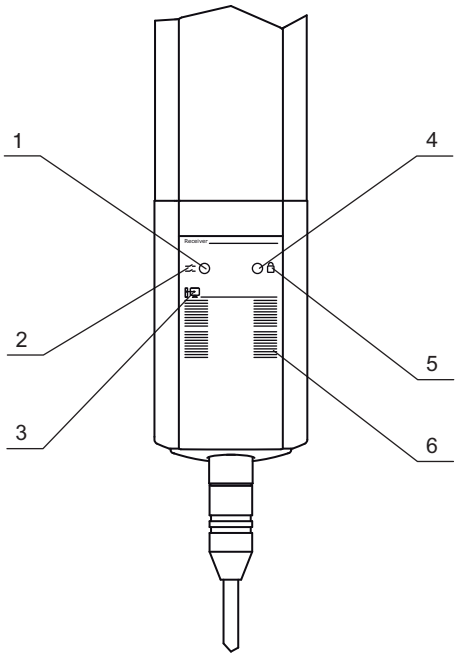

1 LED1
2 OSSD icon
3 Interface icon
4 LED2 (MLD 320, MLD 330, MLD 335, MLD 520, MLD 530, MLD 535)
5 RES icon (MLD 320, MLD 330, MLD 335, MLD 520, MLD 530, MLD 535)
6 Beam marking

Figure 3.4: Operation indicators on the receiver

Table 3.5: Meaning of LED1

LED1	Meaning
Red	OSSD off
Green	OSSD on
Red, flashing slowly (approx. 1 Hz)	External error
Red, flashing fast (approx. 10 Hz)	Internal error
Green, flashing slowly (approx. 1 Hz)	OSSD on, weak signal

Table 3.6: Meaning of the LED2 displays

LED2	Meaning
Yellow	Start/restart interlock locked (restart required)

Table 3.7: Meaning of LED2 for safety sensor with integrated AS-i interface (AS-i model)

LED2	Meaning
Red	AS-i slave not communicating with AS-i master
Green	AS-i slave communicating with AS-i master
Yellow flashing	AS-i slave has invalid address 0
Red, flashing	AS-i slave device error or AS-i connection defective
Red/green, flashing alternately	Periphery error
Off	No voltage

3.3.3 7-segment display at the receiver

(MLD 330, MLD 335, MLD 530, MLD 535)

The 7-segment display shows the number of the operating mode (1 to 6) and assist in the detailed fault diagnostics (see chapter 11). For the identification of the error, the error's respective letter is displayed first followed by the number code. The display is repeated cyclically. An AutoReset is carried out after 10 s, with an unauthorized restart being impossible.

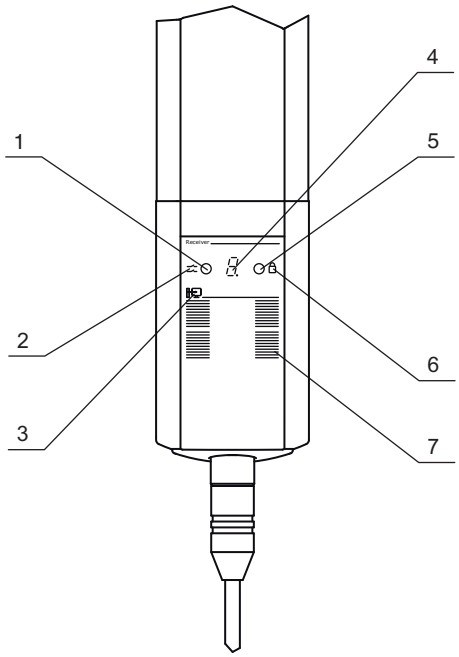

1 LED1
2 OSSD icon
3 Interface icon
4 7-segment display
5 LED2
6 RES icon
7 Beam marking

Figure 3.5: 7-segment display on MLD 330, MLD 335, MLD 530, MLD 535 receiver

Table 3.8: Meaning of the 7-segment display

Display	Meaning
1...6	Selected operating mode in normal operation
F...	Device error, internal error
E...	Interference, external error (see chapter 11)
U...	Usage Event, e.g., U52: muting time limit elapsed (see chapter 11)
8 or .	Error during uploading (see chapter 11)

3.3.4 Multicolor indicator

(Optional for MLD 320, MLD 330, MLD 335, MLD 520, MLD 530, MLD 535 as well as for MLD 510/AS-i, MLD 510-...M/A)

The multicolor indicator signals the OSSD state (see table 11.1). In addition, during muting a constant white light signals that muting has been started correctly and that the protective function has been bridged. A muting error is signalized by flashing (see table 11.2).

Table 3.9: Multicolor indicator

Color	Meaning
Green	OSSD on

Color	Meaning
Red	OSSD off
Yellow/red, alternating	Restart locked
White	Muting (for MLDx30 and MLDx35)

NOTE	
	With AS-i devices, the integrated muting indicator must be set externally, e.g. via asimon configuration and diagnostics software.

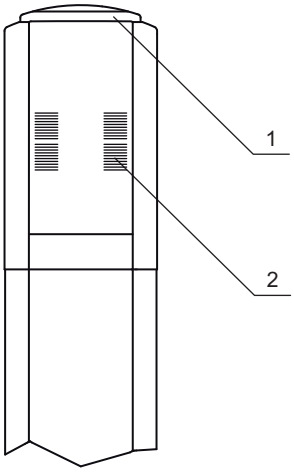

1 Muting indicators
2 Beam marking

Figure 3.6: Muting indicator on the receiver

3.4 Integrated laser alignment aid

(Optional for MLD 310, MLD 312, MLD 320, MLD 510, MLD 520)

The laser alignment aid is optionally available for transmitter-receiver systems. There is a red light laser on the transmitter side of each light axis. The laser beams can all be switched on simultaneously via MagnetKey. The sensor for the MagnetKey is located next to the transmitter's first light axis. The laser beams remain active for approx. 10 min and then switch off automatically (see chapter 8.5).

NOTE	
	Alternatively, the laser can also be activated for approx. 10 min by a signal on the transmitter. To do this, a change has to be made from 0 V to 24 V on pin 2, e.g. with a connected sensor (see table 7.1).

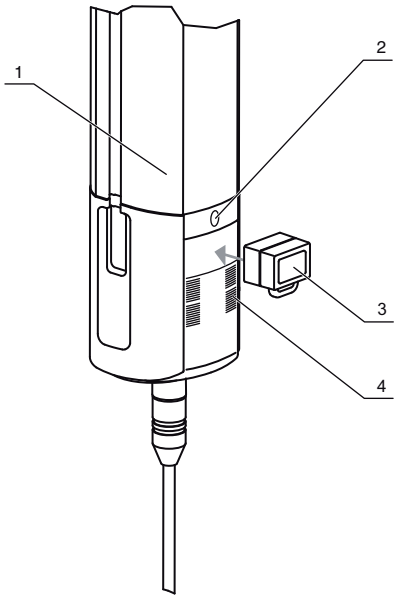

1 Transmitter
2 Laser aperture
3 MagnetKey
4 Beam marking

Figure 3.7: MagnetKey activation position at first light axis of the transmitter

CAUTION!	
⚠	**Danger! Class 2 laser beams!** Never look directly into the laser beam. This can cause damage to the eye.

4 Functions

Table 4.1: Overview of the safety functions

Function	Description
Stop function	safety-related; initiated by the protective device
RES (start/restart interlock)	prevents automatic restart; forces manual confirmation
EDM (contactor monitoring)	monitors the N/C contacts of downstream positive-guided contactors and relays
Muting	targeted, proper bridging of the protective function
Periodic function test	safety-related; initiated and tested, e.g. by an external safety monitoring device

Table 4.2: Functions of the different versions

Function	MLD 310, MLD 510	MLD 312, testable	MLD 320, MLD 520	MLD 330, MLD 530	MLD 335, MLD 535
OSSDs	2	1	2	2	2
Automatic start/restart	●	●	●		
RES			●[a)]	●	●
EDM			●[a)]	●	●
EDM, selectable				●	●
Signal output			●	●	●
LED indicator	●	●	●	●	●
7-segment display				●	●
Timing controlled 2-sensor muting				●[b)]	
Sequence controlled 2-sensor muting				●	●
Timing controlled 4-sensor muting					●[c)]
Laser alignment aid (optional for transmitter-receiver systems)	●	●	●		
Configurable operating modes				●	●
External test		●			

a) Selectable

b) Filter time (time that the muting is maintained in the case of temporary interruption of the muting signal): 3 s for one missing muting signal, 300 ms for two missing muting signals

c) Filter time (time that the muting is maintained in the case of temporary interruption of the muting signal, MS1 + MS4 and MS2 + MS3 are connected in parallel): 0.1 s for one missing muting signal, 50 ms for two missing muting signals

4.1 Start/restart interlock

(MLD 320, MLD 330, MLD 335, MLD 520, MLD 530, MLS 535)

The start/restart interlock prevents automatic release of the safety circuits and automatic start-up of the system (e.g. if the protective field is again clear or if an interruption in the voltage supply is restored). The operator must make certain that no people are present in the danger zone before the system is manually

re-enabled with the start/restart button (see chapter 8.6.1).

4.2 Contactor monitoring

(MLD 320, MLD 330, MLD 335, MLD 520, MLD 530, MLS 535)

The electro-sensitive protective equipment monitors the feedback circuits of the connected contactors. The signal at the EDM input is compared to the state of the OSSDs. The feedback circuit must be open while the OSSDs are switched on (high-impedance). When the OSSDs are switched off, 0 V is applied at the EDM input (see chapter 7.2). The reaction at the EDM input with respect to the OSSDs is delayed by maximum 500 ms (contactors).

4.3 Signal output

(MLD 320, MLD 330, MLD 335, MLD 520, MLD 530, MLS 535)

The receiver or transceiver features a signal output. Pin 1 reports the state of the OSSDs.

Table 4.3: Signaling of the state of the OSSDs

Voltage at signal output (pin 1)	OSSD
0 V	On
24 V	Off

4.4 Range switching

With transmitter/receiver systems, the range can be adjusted on pin 4 of the transmitter. It is possible to switch between 50 m and 20 m.

Table 4.4: Range switching on pin 4 of the transmitter

Pin 4	Operating range of the MLD500Tx	Operating range of the MLD500XTx
0 V	50m	70 m
24 V	0 to 25 m	10 to 35 m

4.5 MultiScan mode

Only after an interruption of the protective field continues for several consecutive scans is the system switched off. This increases the availability (e.g. in the event of minor physical shocks).

4.6 Periodic function test

(MLD 312)

The receiver/transceiver of the MLD 312 is equipped with a test input for the periodic function test by an external safety monitoring device (e.g. Leuze MSI-T). Signal response and timing (see figure 4.1).

	NOTE
	When using the external test, make certain that the test duration does not exceed 150 ms.

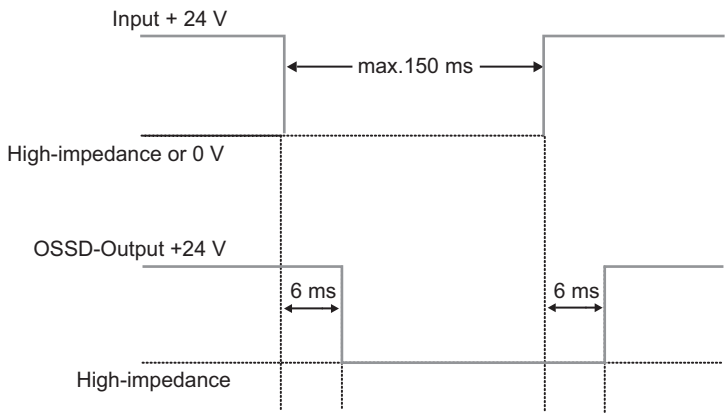

Figure 4.1: Reaction of the OSSD switching output of the MLD 312 to an external test request

4.7 Muting

By means of muting, the protective function can be temporarily and properly suppressed, e.g. if objects are to be transported through the protective field. During this time, the OSSDs remain in the ON state in spite of interruption of one or more beams.

Muting is only initiated automatically and via two mutually independent muting signals. If present, the muting indicator illuminates continuously during the entire duration of muting operation. Muting operation ends if muting is either properly ended after the muting signals have been freed or if the preset maximum duration (muting timeout) is exceeded before the muting signals have been freed.

Following malfunctions or operationally related interruptions (e.g. power failure, violation of the simultaneity condition during timing controlled 2-sensor muting on activation of the muting sensors), the system can be manually reset with the start/restart button and overridden.

4.7.1 Timing controlled 2-sensor muting

The two muting sensors MS1 and MS2 are arranged in such a way that the beams cross and the process can utomatically activate both sensors (within 4 s). As a result, an object can be transported through the protective field in both directions. The intersection point must be within the danger zone to prevent muting from being unintentionally triggered.

If muting was properly activated, it remains active even during brief interruptions of a single sensor signal. On foil-wrapped objects, for example, brief signal interruptions can occur—particularly with diffuse sensors. These short signal interruptions are, therefore, filtered out for up to max. 3 s (MLD 335, MLD 535: 300 ms). If both muting sensors are inactive simultaneously, timing controlled 2-sensor muting ends after the filter time has elapsed.

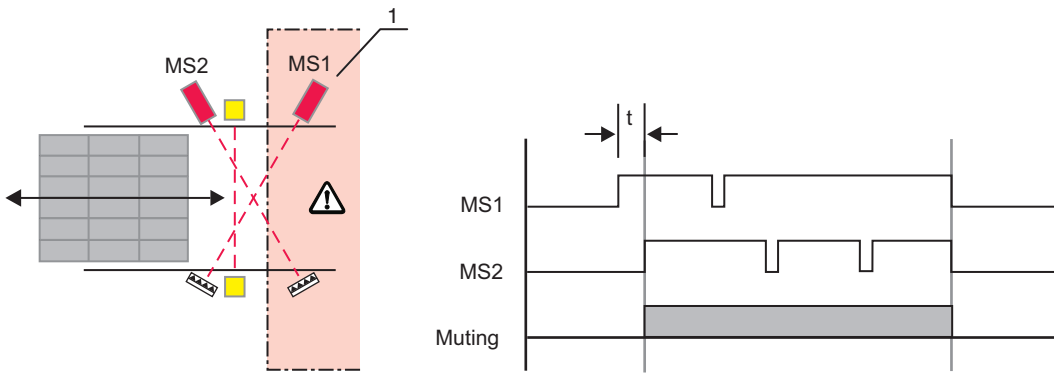

1 Danger zone
MS1 Muting sensor 1
MS2 Muting sensor 2
t Time frame in which both muting sensors must be activated (< 4 s)

Figure 4.2: Timing controlled 2-sensor muting – arrangement of the muting sensors and timing

4.7.2 Sequence controlled 2-sensor muting (exit)

Sequence controlled 2-sensor muting is particularly well suited for exiting danger zones, especially if there is only limited space available outside of the danger zone. In this case, material transport is only permissible in one direction due to the arrangement of the muting sensors. Muting sensors MS1 and MS2 are positioned within the danger zone and arranged so that they are activated in sequence. The muting state is ended again 8 s after MS1 is freed and 5 s after MS2 is freed (if MS1 is already free). The transported goods can thus leave the protective field prior to this time. MS2 must be activated within 8 h after MS1.

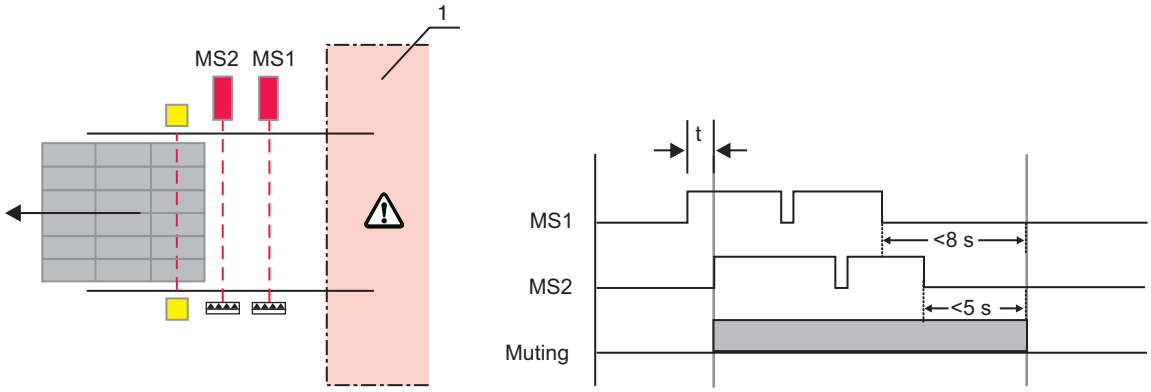

1 Danger zone
MS1 Muting sensor 1
MS2 Muting sensor 2
t Time frame in which both muting sensors must be activated (< 8 h)

Figure 4.3: Sequence controlled 2-sensor muting – arrangement of the muting sensors and timing

Sequence controlled 2-sensor muting can also be used if objects that are positioned close to one another are to be moved through the protective field. The distance between the individual objects must, however, be large enough that at least one muting sensor is free between two successive objects for at least 300 ms.

⚠ WARNING!	
⚠	**Risk of death by through incorrect arrangement of the muting sensors!** Only select sequence controlled 2-sensor muting for material exits (see chapter 6.2.5).

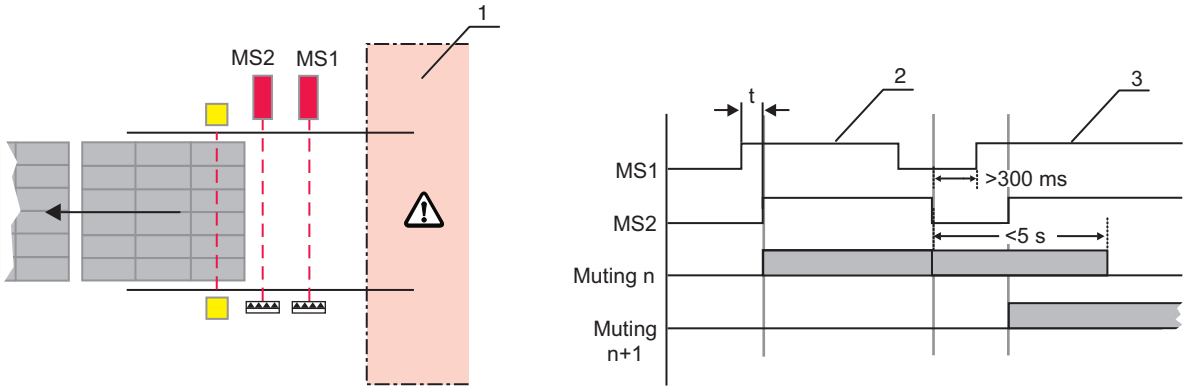

1 Danger zone
MS1 Muting sensor 1
MS2 Muting sensor 2
t Time frame in which both muting sensors must be activated (< 8 h)
2 Muting material 1
3 Muting material 2

Figure 4.4: Muting for tight sequences of objects – arrangement of the muting sensors and timing

4.7.3 Timing controlled 4-sensor muting

(MLD 335, MLD 535)

Timing controlled 4-sensor muting is used when the muting sensor light beams should not cross, but instead must be parallel, due to special application situations, e.g. with reflective materials or under disruptive environmental conditions. For timing controlled 4-sensor muting, the four muting sensors arranged in

succession must be activated in a defined and specific order to trigger muting (see figure 4.5).

Muting occurs during both forward and reverse travels. The order in which the muting sensors are activated is decisive for time behavior. After activation of the first muting sensor, activation of the next muting sensor must occur within 4 s.

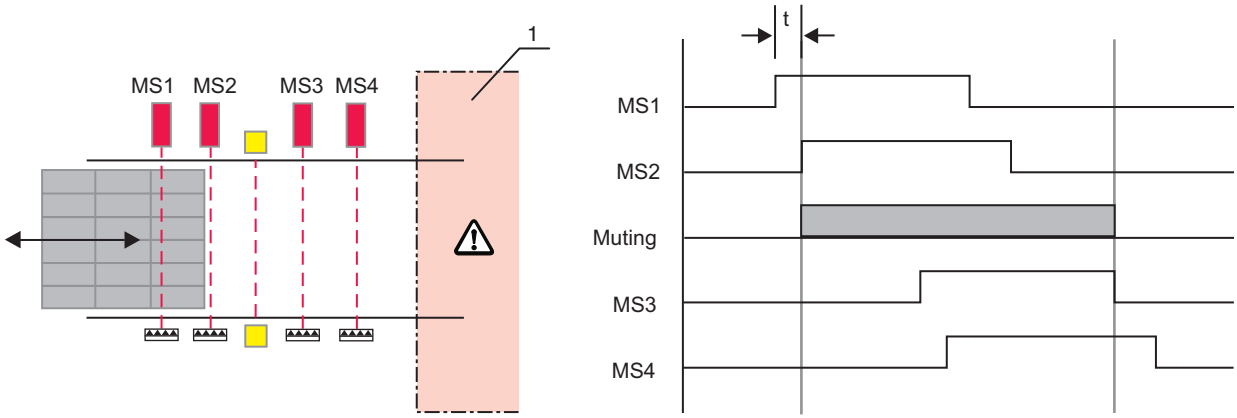

1	Danger zone
MS1	Muting sensor 1
MS2	Muting sensor 2
MS3	Muting sensor 3
MS4	Muting sensor 4
t	Time frame in which both muting sensors must be activated (4 s)

Figure 4.5: Timing controlled 4-sensor muting: arrangement of the muting sensors and timing

Muting after the filter time is ended correctly (e.g. the OSSDs remain in the ON state during passage) when the MS3 (MS2) becomes free and therefore switches to "inactive".

Muting is ended incorrectly (e. g. the OSSDs switch off) when the following cases occur:

- During the muting process, a muting sensor incorrectly switches to "inactive" for longer than the filter time.
- MS2 is activated no sooner than 4 s after MS1 (or MS3 is activated no sooner than 4 s after MS4).
- The muting time limit has elapsed.

NOTE	
i	Make sure that the material to be transported is sufficiently long for the simultaneous activation of the muting sensors (see chapter 6.2.6).

4.7.4 Muting timeout

A flexible, application-adapted muting timeout extension (e.g. by a high-pass signal) is possible in operating modes 1, 5 and 6 (see chapter 4.7.9). In the standard operating modes, the time frame for the muting timeout is set to 10 min and muting is automatically ended after this time elapses (the protective function is active again). In operating modes 2 and 4, 100 h is set as muting timeout.

For this purpose, +24 V must be applied to the muting timeout input before muting is initiated. If, during muting, voltage now switches to 0 V at this input (e.g. by a high-pass signal), the muting timeout is extended as long as 0 V continues to be present. After the muting timeout extension ends, muting is only possible for another 10 min.

The muting timeout extension ends as soon as one of the following conditions is met:

- Level at the input of the muting timeout extension switches to the high state
- Muting duration reaches 100 h

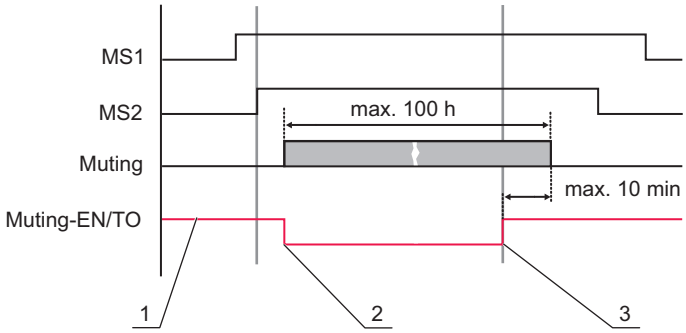

1 M-EN / TO = high -> muting timeout extension
2 Start of the muting timeout extension
3 End of the additional muting timeout extension

Figure 4.6: Muting-timeout extension

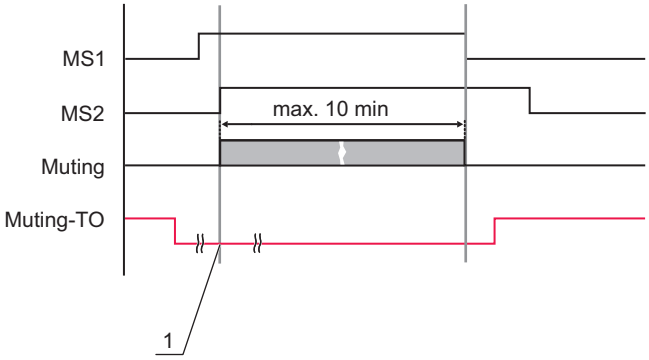

1 M-EN / TO = low -> no muting timeout extension

Figure 4.7: No valid signal for timeout extension

4.7.5 Muting restart

Following a muting error (e.g. muting timeout, failure of the supply voltage), the restart button can be used to override the muting path even if the protective field is interrupted (see chapter 8.6.2).

	⚠ WARNING!
⚠	**Unmonitored overrides may result in serious injury!** ↳ A qualified person (see chapter 2.2) must observe the procedure exactly. ↳ If necessary, the competent person (see chapter 2.2) must release the reset button immediately to stop the dangerous movement. ↳ Make certain that the danger zone can be viewed from the reset button and that the entire process can be observed by a responsible person. ↳ Before and during the muting override, ensure that there are no people in the danger zone.

4.7.6 Alternative connection for second muting signal

Particularly in cases in which the second independent muting signal comes, for example, from a control, it is advantageous to connect this signal to the machine interface (8-pin plug). In operating modes 2, 3, 4 and 6, the second muting signal can alternatively be connected to input MS2 of the 8-pin plug or to input MS2 of the local interface (5-pin socket).

	NOTE
ℹ	The muting signal from the control must not be applied constantly; rather, it must only be activated if muting is required.

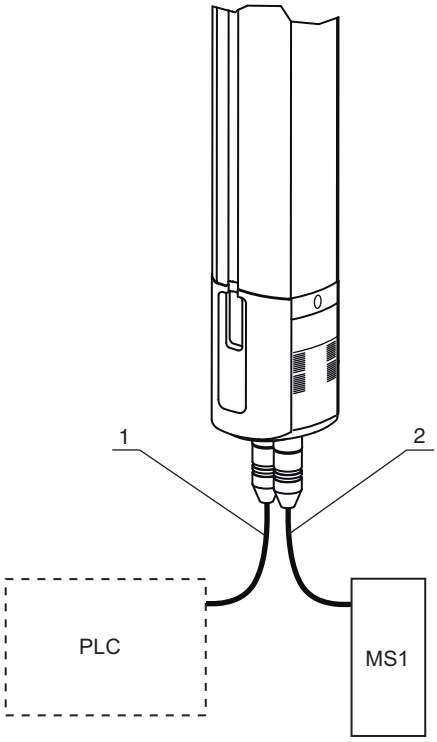

1 Machine interface (8-pin)
2 Local interface (5-pin socket)

Figure 4.8: 2nd muting signal from the control

4.7.7 Muting-enable

With the muting-enable function, muting can be enabled or disabled via an external signal. If +24 V is applied at the muting-enable input, a subsequent, valid muting sequence results in muting. If 0 V is applied at the muting-enable input, no muting is possible, even if a valid muting sequence is detected. This signal may be applied for a maximum of 8 hours (as high level); otherwise, an error is displayed. Before muting-enable can be used, 0 V must first be applied at the muting-enable input.

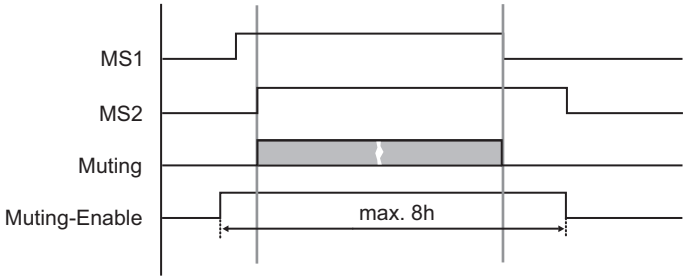

Figure 4.9: Muting-enable

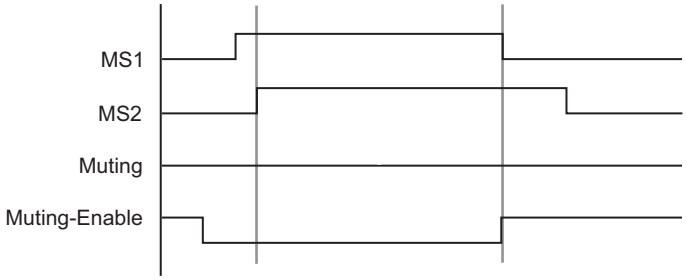

Figure 4.10: No valid muting-enable signal

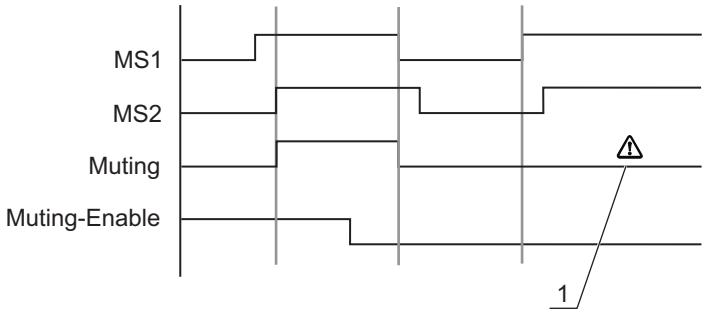

1 No muting possible here!

Figure 4.11: Example: Fault at the muting-enable cable

4.7.8 Partial muting

For transmitter-receiver systems, the top light beam is not included in muting in operating mode 6. As a result, the protective device switches to the interlock state in spite of active muting if the upper beam is interrupted.

4.7.9 Muting operating modes

The device models with integrated muting can be operated in six different operating modes. Corresponding to the operating mode selected, various functions are available for every muting type.

All functions and operating modes can be selected without additional equipment, such as PC, software, etc.

You can find details on selecting the operating mode in chapter "Electrical connection" (see chapter 7.3).

Table 4.5: MLD 330, MLD 530 operating modes and functions (2-sensor muting)

	Functions							
Operating mode	RES	EDM	Muting operating mode	Muting timeout	Muting-timeout extension	Alternative connection for second muting signal [a]	Muting-enable	Partial muting
1	●	Selectable	Timing controlled 2-sensor muting	10 min	●			
2	●	Selectable	Timing controlled 2-sensor muting	100 h		●		
3	●	Selectable	Sequence controlled 2-sensor muting	10 min		●		
4	●		Sequence controlled 2-sensor muting	100 h		●		
5	●	Selectable	Timing controlled 2-sensor muting	10 min	●		●	
6	●		Timing controlled 2-sensor muting	10 min	●	●		●

a) If the second muting signal comes, for example, from a control, this signal can also be connected to the 8-pin plug (usually establishes a connection to the switch cabinet).

Table 4.6: MLD 335, MLD 535 operating modes and functions (2- and 4-sensor muting)

	Functions							
Operating mode	RES	EDM	Muting operating mode	Muting timeout	Muting-timeout extension	Alternative connection for second muting signal[a)]	Muting-enable	Partial muting
1	●	Selectable	Timing controlled 4-sensor muting[b)]	10 min	●			
2	●	Selectable	Timing controlled 4-sensor muting[b)]	100 h		●		
3	●	Selectable	Sequence controlled 2-sensor muting	10 min		●		
4	●		Sequence controlled 2-sensor muting	100 h		●		
5	●	Selectable	Timing controlled 4-sensor muting[b)]	10 min	●		●	
6	●		Timing controlled 4-sensor muting[b)]	10 min	●			●

a) If the second muting signal comes, for example, from a control, this signal can also be connected to the 8-pin plug (usually establishes a connection to the switch cabinet).

b) Timing controlled 2-sensor muting also possible with shortened filter times: 0.1 s instead of 3 s

5 Applications

5.1 Access guarding

MLD safety sensors are used e.g. for access guarding of danger zones. They detect people only upon entry into the danger zone, i.e. they do not detect a person who is present in the danger zone. Access guarding may therefore only be operated with activated start/restart interlock or additional safety measures must be taken.

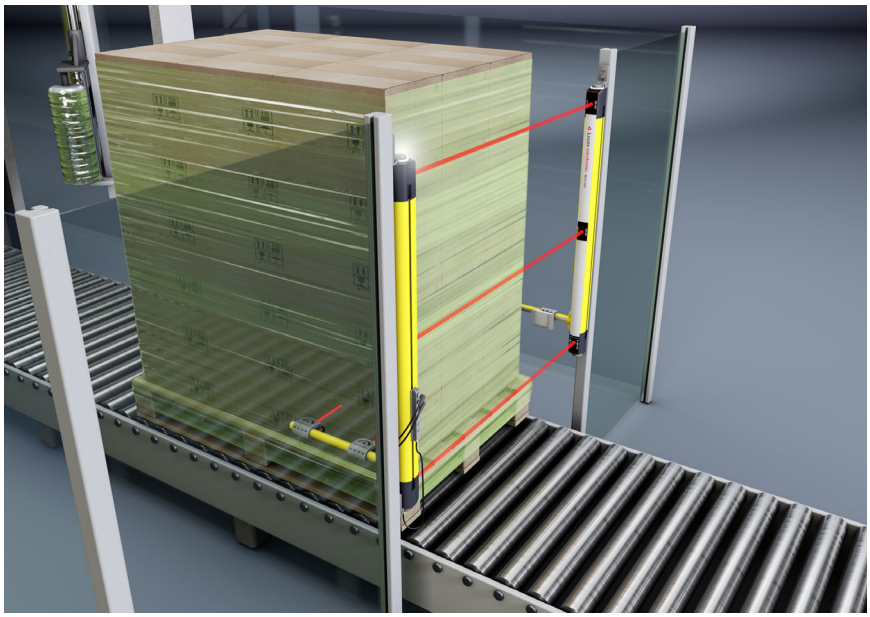

Figure 5.1: 3-beam guarding for exits from danger zones

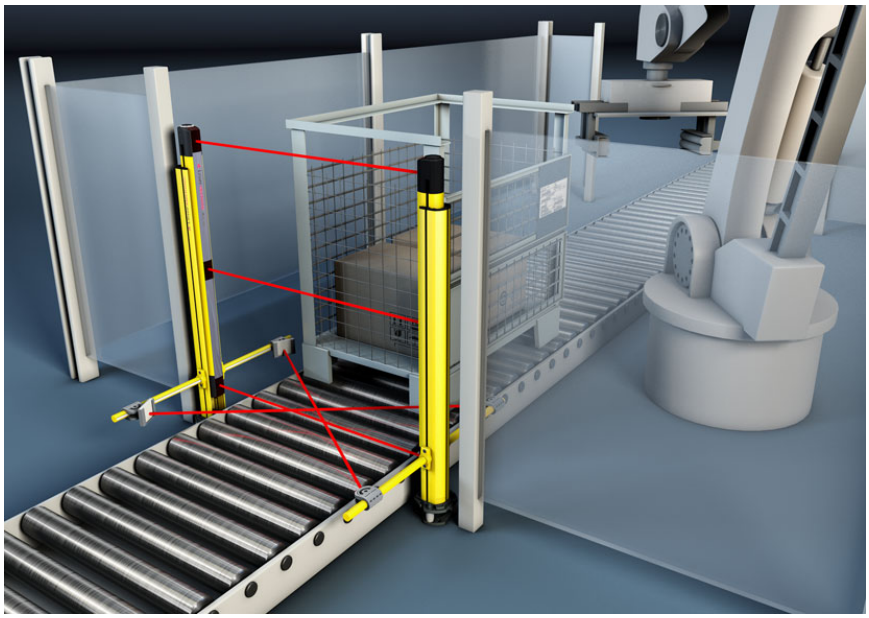

Figure 5.2: 3-beam guarding with transceiver system for an application with palletizing robot

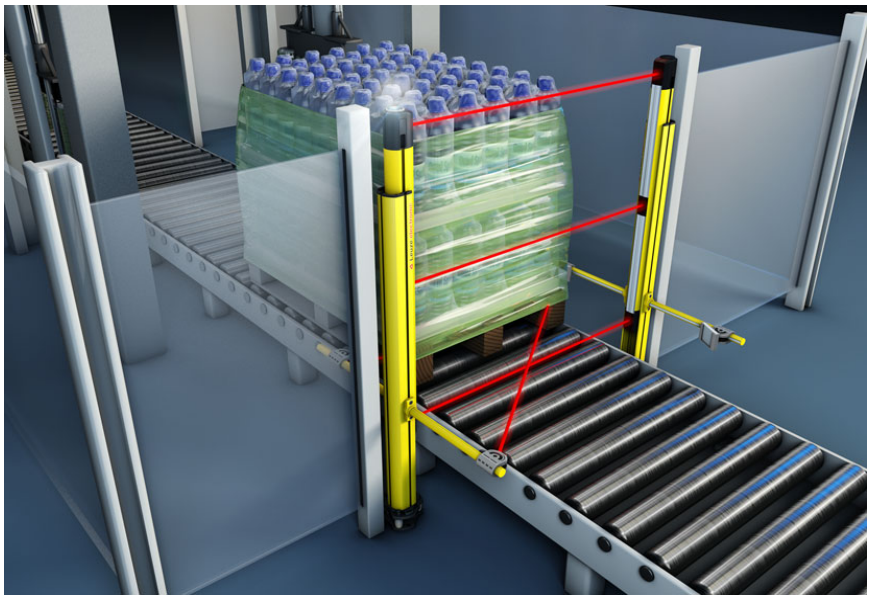

Figure 5.3: Access guarding with timing controlled 2-sensor muting for an application with a pallet wrapping machine

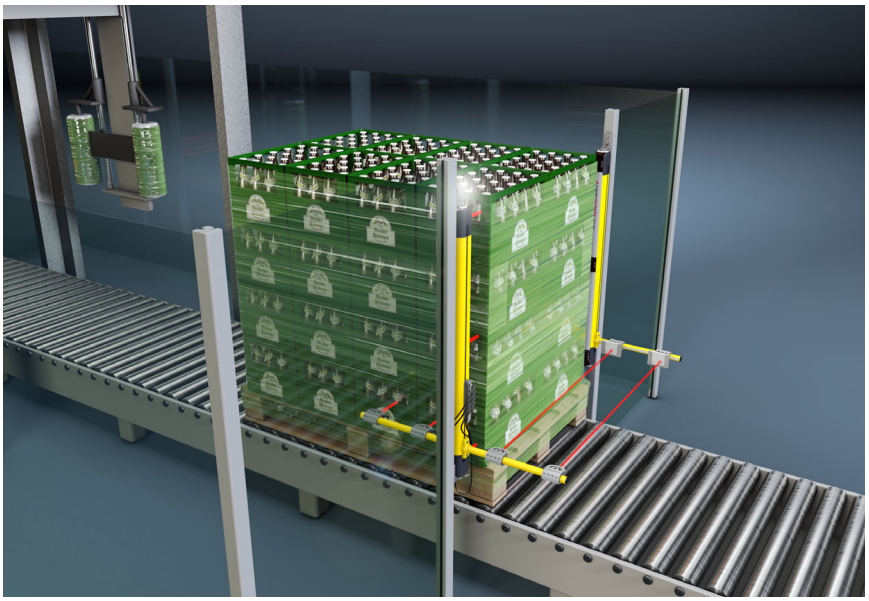

Figure 5.4: Access guarding on the roller conveyor with timing controlled 4-sensor muting (MLD 535 with pre-mounted muting sensor sets)

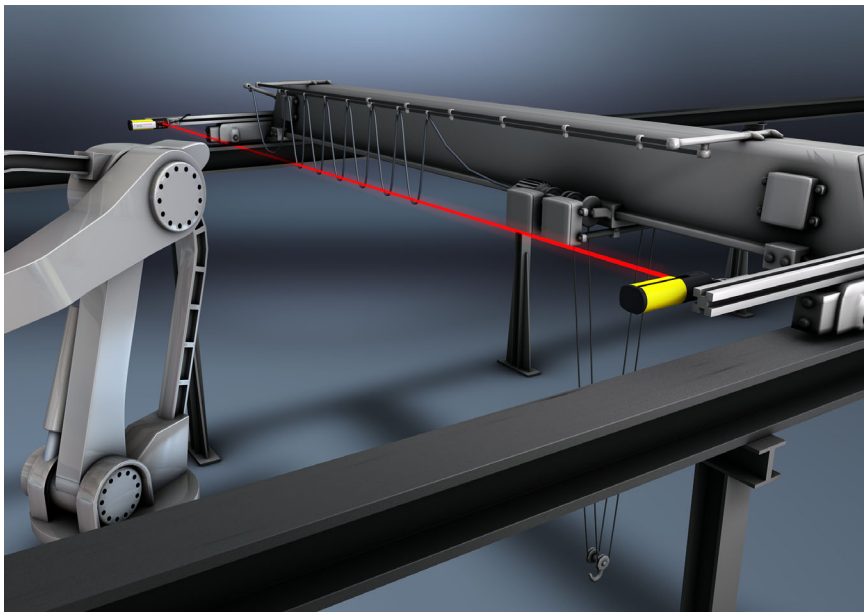

Figure 5.5: Collision prevention with 1-beam safety sensor through detection of robot movements

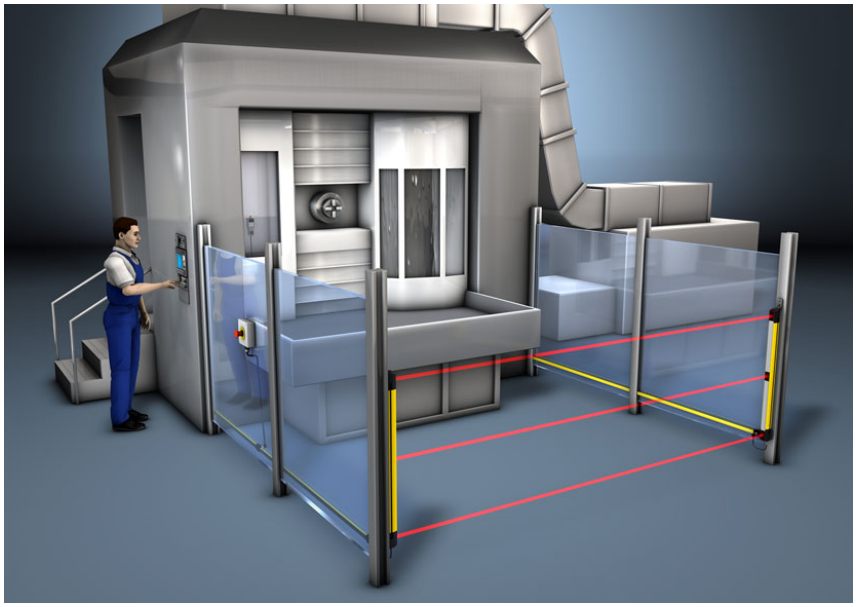

Figure 5.6: Access guarding based on AS-i safety at work with MLD 500/AS-i at a processing center

6 Mounting

WARNING!	
	Improper mounting may result in serious injury! The protective function of the safety sensor is only ensured if appropriately and professionally mounted for the respective, intended area of application. ↳ Only allow the safety sensor to be installed by qualified persons (see chapter 2.2). ↳ Maintain the necessary safety distances (see chapter 6.1.3). ↳ Observe the relevant standards, regulations and these instructions. ↳ Clean the transmitter and receiver at regular intervals: environmental conditions (see chapter 14), care (see chapter 10). ↳ After mounting, check the safety sensor for proper function.

6.1 Arrangement of transmitter and receiver

Optical protective devices can only perform their protective function if they are mounted with adequate safety distance. When mounting, all delay times must be taken into account, e.g. the response times of the safety sensor and the control elements as well as the stopping time of the machine.

NOTE	
	When using AS-i safety sensors, the bus system reaction time of maximum 40 ms additionally required by the AS interface and the AS-i safety monitor must be added to the total time of the delay (T) (when completely equipped with 31 slaves).

The following standards specify calculation formulas:

- EN ISO 13855, "The positioning of protective devices in respect of approach speeds of parts of the human body": mounting situation and safety distances
- EN IEC 61496-2, "Active optoelectronic protective devices": distance of the reflecting surfaces/ deflecting mirrors

6.1.1 Arrangement of 1-beam safety sensors

NOTE	
	When safeguarding with 1-beam safety sensors, make certain that the light beams are aligned parallel to the reference plane, e.g. to the floor. For multi-axis safeguarding with 1-beam safety sensors, the opposite beam direction is to be selected for adjacent sensors because the light beams in the individual axes otherwise mutually interfere with one another, thereby affecting the safe function of the protective device.

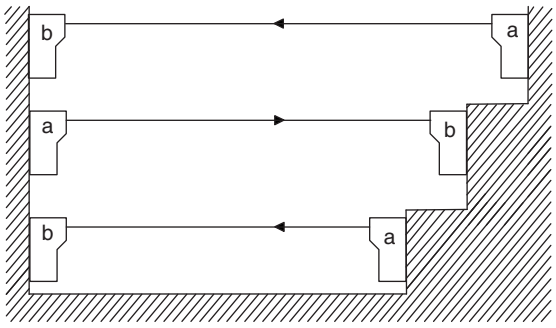

Figure 6.1: Multi-axis arrangement with geometric offset (max. 15 m)

6.1.2 Beam heights and ranges

Table 6.1: Beam heights and ranges of the device models

Beams / beam distance [mm]	Recommendation of beam heights in accordance with EN ISO 13855 [mm]	Transmitter/receiver range [m]	Operating range Transceiver [m]
2 / 500	400[a)] , 900	0.5 to 50 / 20 to 70 [b)]	0.5 to 8
3 / 400	300, 700, 1100	0.5 to 50 / 20 to 70 [b)]	0.5 to 6 or 8
4 / 300	300, 600, 900, 1200	0.5 to 50 / 20 to 70 [b)]	-

a) for the lowest beam, 400 mm are only permissible if allowed by the risk assessment.

b) when using the MLD...X models

6.1.3 Calculating the safety distance

General formula for calculating the safety distance S of an Optoelectronic Protective Device acc. to EN ISO 13855:

$$S = K \cdot T + C$$

S	[mm]	= Safety distance
K	[mm/s]	= 1600 mm/s (approach speed for access guarding)
T	[s]	= Total time of the delay
C	[mm]	= 850 mm (default value for arm length)

↳ Calculate the safety distance S for access guarding using the formula acc. to EN ISO 13855:

$$S = 1600\ \text{mm/s} \cdot (t_a + t_i + t_m) + 850\ \text{mm}$$

S	[mm]	= Safety distance
t_a	[s]	= Response time of the protective device
t_i	[s]	= Response time of the safety interface device
t_m	[s]	= Machine stopping time

NOTE	
ℹ	If longer stopping times are determined during regular inspections, an appropriate additional time must be added to t_m.

Calculation example

A robot with a stopping time of 250 ms is to be safeguarded with a safety sensor. The response time is 10 ms and an additional interface does not need to be used.

$$S = K \cdot T + C$$

K	[mm/s]	= 1600 mm/s
T	[ms]	= (10 ms + 250 ms)
C	[mm]	= 850 mm
S	[mm]	= 1600 mm/s · 0.26 s + 850 mm
S	**[mm]**	= **1266** mm

6.1.4 Calculation of the safety distance for vertical protective fields with reaching over

If it is possible to reach over or under a vertical protective field, additional distance C_{RO} must be observed in addition to the safety distance corresponding to EN ISO 13855.

$$S_{RO} = K \cdot T + C_{RO}$$

S_{RO}	[mm]	= Safety distance in the case of access **above** the protective field
K	[mm/s]	= 1600 mm/s (approach speed for access guarding)
T	[s]	= Total sum of the delay (ta + ti + tm) from t_a: response time of the protective device t_i: response time of the safety interface device t_m: stopping time of the machine
C_{RO}	[mm]	= Value see table 6.2 (Additional distance in which a body part can move towards the protective device before the protective device triggers)

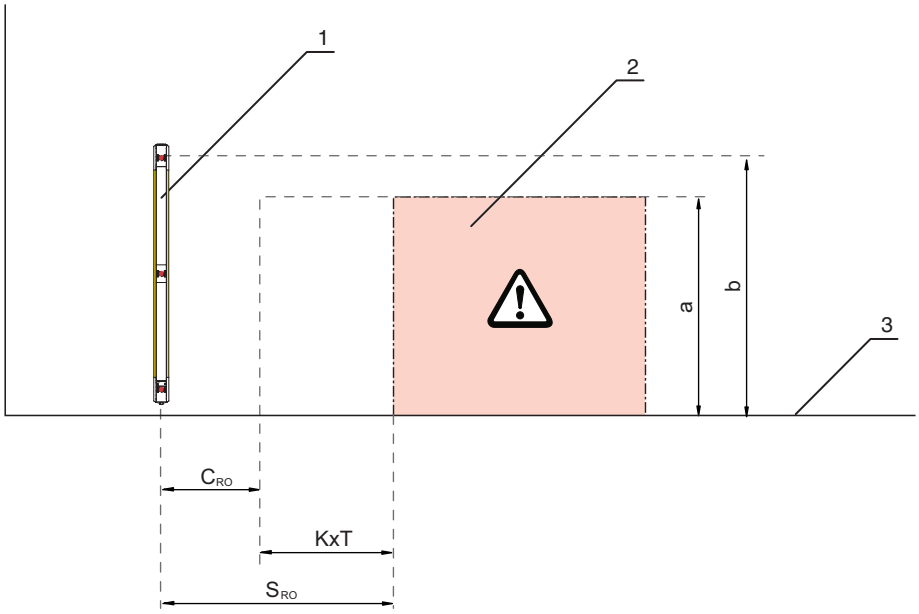

1 Safety sensor
2 Danger zone
3 Floor
a Height of the point of operation
b Height of the upper beam of the safety sensor

Figure 6.2: Additional distance to the safety distance when reaching over and under

Table 6.2: Reaching over the vertical protective field of electro-sensitive protective equipment (excerpt from EN ISO 13855)

Height a of the point of operation [mm]	Height b of the upper edge of the protective field of the electro-sensitive protective equipment				
	900	1000	1100	1200	1300
	Additional distance C_{RO} to the danger zone [mm]				
2600	0	0	0	0	0
2500	400	400	350	300	300
2400	550	550	550	500	450
2200	800	750	700	650	650
2000	**950**	**950**	850	850	800
1800	**1100**	**1100**	**950**	**950**	850

Height a of the point of operation [mm]	Height b of the upper edge of the protective field of the electro-sensitive protective equipment				
	900	1000	1100	1200	1300
	Additional distance C_{RO} to the danger zone [mm]				
1600	**1150**	**1150**	**1100**	**1000**	**900**
1400	**1200**	**1200**	**1100**	**1000**	**900**
1200	**1200**	**1200**	**1100**	**1000**	850
1000	**1200**	**1150**	**1050**	**950**	750
800	**1150**	**1050**	**950**	800	500
600	**1050**	**950**	750	550	0
400	900	700	0	0	0
200	600	0	0	0	0
0	0	0	0	0	0

Given are

- Height a of the point of operation
- Height b of the upper beam of the safety sensor

To be determined is the necessary distance S of the safety sensor to the point of operation and thereby additional distance C_{RO}.

↳ In the column head, look for the column with the next lower entry for the height of the upper beam of the safety sensor (b).

↳ Search in the left column for the next higher entry for the point of operation.

↳ At the intersection, read the value C_{RO}.

If $S_{RO} > S$, S_{RO} is to be used!

Calculation example

A machine system with a stopping time of 300 ms should be safeguarded with a 3-beam safety sensor. The response time is 35 ms and an additional interface does not need to be used. A danger zone height of 600 mm is assumed. Beams should be placed at heights of 300 mm, 700 mm and 1100 mm from the floor.

Calculation of safety distance S:

$$S = K \cdot T + C$$

K	[mm/s]	= 1600 mm/s
T	[ms]	= 335 ms
C	[mm]	= 850 mm
S	[mm]	= 1600 mm/s · 0.335 s + 850 mm
S	**[mm]**	= **1386** mm

Calculation of safety distance S_{RO} when protective field is accessed from above:

Since the height of the upper beam equals 1100 mm, possible reaching over is to be taken into account. If the height of the danger zone is 600 mm, the value for C_{RO} = 750 mm (see table 6.2).

$$S_{RO} = K \cdot T + C_{RO}$$

K	[mm/s]	= 1600 mm/s
T	[ms]	= 335 ms
C_{RO}	[mm]	= 750 mm
S	[mm]	= 1600 mm/s · 0.335 s + 750 mm
S_{RO}	**[mm]**	= **1286** mm

This means S_{RO} < S, so S is to be used!

Calculation of safety distance S_{RO} when the height of the upper beam has changed:
The height of the upper beam is now 900 mm. All other parameters remain the same. C_{RO} = 1050 mm (see table 6.2).

$$S_{RO} = K \cdot T + C_{RO}$$

K	[mm/s]	= 1600 mm/s
T	[ms]	= 335 ms
C_{RO}	[mm]	= 1050 mm
S	[mm]	= 1600 mm/s · 0.335 s + 1050 mm
S_{RO}	**[mm]**	= **1586** mm

This means S_{RO} > S, so S_{RO} is to be used!

6.1.5 Minimum distance to reflective surfaces

⚠ WARNING!

Failure to maintain minimum distances to reflective surfaces may result in serious injury!
Reflective surfaces can indirectly deflect the transmitter beams to the receiver. In this case, interruption of the protective field is not detected.

- Determine the minimum distance a (see figure 6.3).
- Make certain that all reflective surfaces are the necessary minimum distance away from the protective field (see figure 6.4 and see figure 6.5).

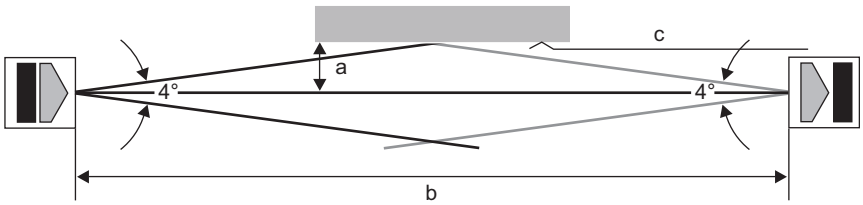

a Required minimum distance to reflective surfaces [mm]
b Protective field width [m]
c Reflective surface

Figure 6.3: Minimum distance to reflective surfaces depending on protective field width

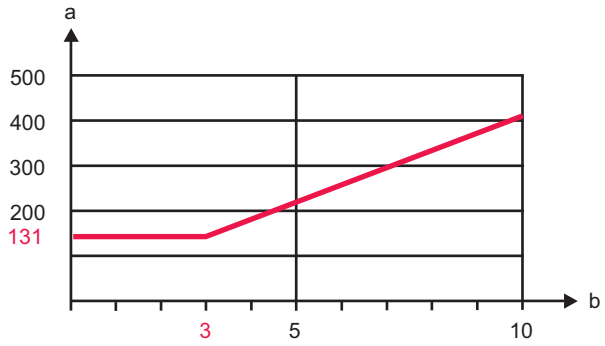

a Required minimum distance to reflective surfaces [mm]
b Protective field width [m]

Figure 6.4: Minimum distance to reflective surfaces as a function of the protective field width up to 10 m

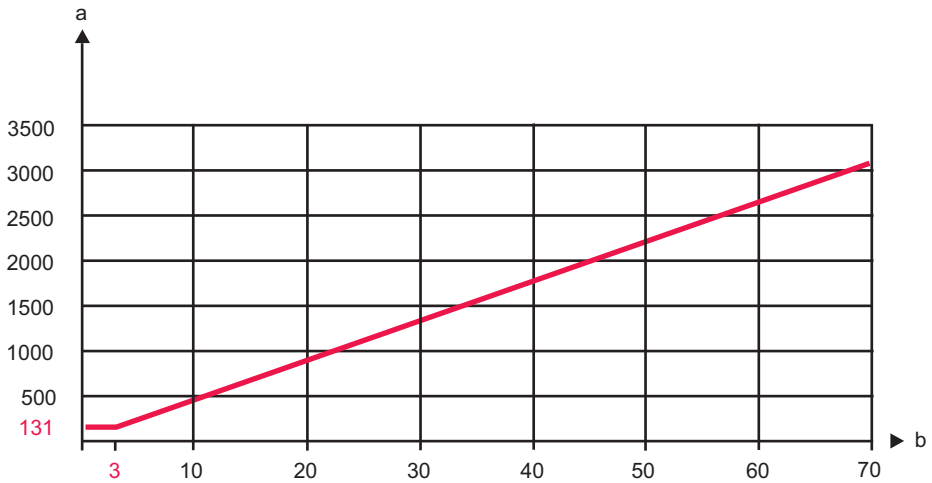

a Required minimum distance to reflective surfaces [mm]
b Protective field width [m]

Figure 6.5: Minimum distance to reflective surfaces as a function of the protective field width up to 70 m

Table 6.3: Formula for calculating the minimum distance to reflective surfaces

Distance (b) transmitter-receiver	Calculation of the minimum distance (a) to reflective surfaces
$b \leq 3$ m	a [mm] = 131
$b > 3$ m	a [mm] = tan(2.5°) · 1000 · b [m] = 43.66 · b [m]

6.1.6 Preventing mutual interference between adjacent devices

If a receiver is located in the beam path of an adjacent transmitter, optical crosstalk, and thus erroneous switching and failure of the protective function, may result.

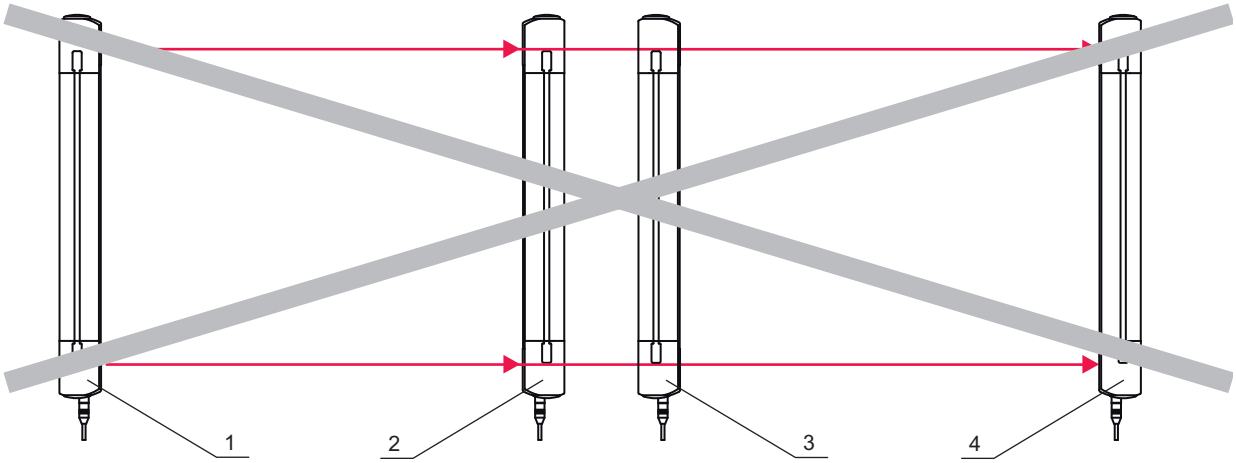

1 Transmitter 1
2 Receiver 1
3 Transmitter 2
4 Receiver 2

Figure 6.6: Optical crosstalk between adjacent safety sensors due to incorrect mounting

	⚠ WARNING!
⚠	**With systems that are mounted spatially close to one another, a transmitter of one system can influence the receiver of the other system, thereby affecting the protective function!** ↳ Prevent optical crosstalk between adjacent devices.

↳ Mount adjacent devices with a shield between them or install a dividing wall to prevent mutual interference.

↳ Mount the adjacent devices oppositely with respect to one another to prevent mutual interference. Depending on the application, another possibility for preventing mutual interference is the use of the device's range reduction (range switching).

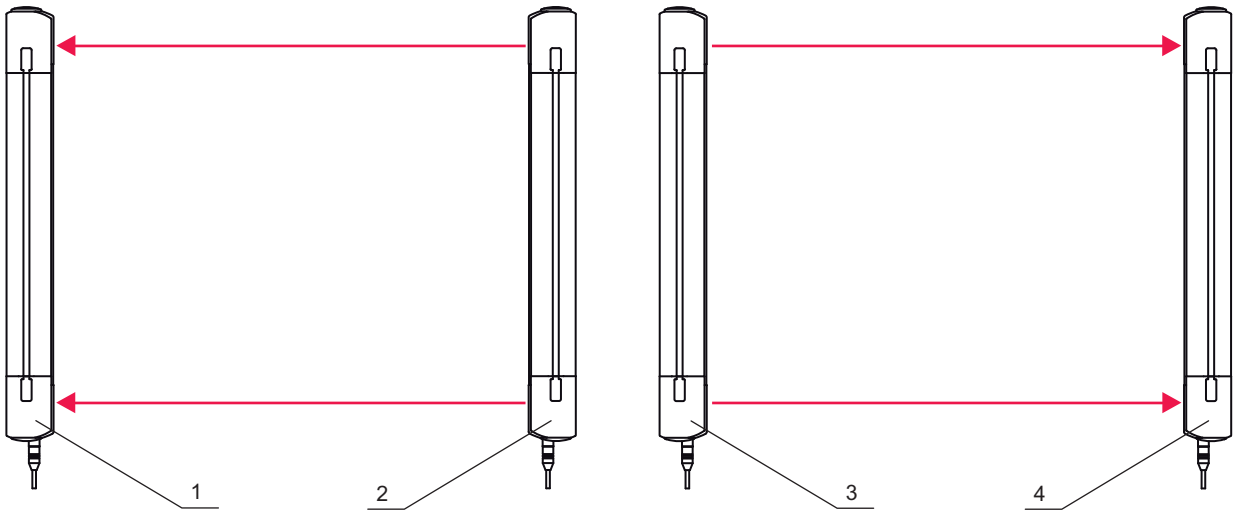

1 Receiver 1
2 Transmitter 1
3 Transmitter 2
4 Receiver 2

Figure 6.7: Opposing mounting

6.2 Arrangement of the muting sensors

	NOTE
ℹ	Muting sensors detect material and supply the signals necessary for muting. Standard IEC 62046 provides basic information on arranging the muting sensors. This information must be observed when mounting the muting sensors.

6.2.1 Basic information

Before you begin with the selection and mounting of the muting sensors, please note the following:

- Muting must be triggered by two independently wired muting signals and must not be fully dependent on software signals, e.g. from a PLC.
- When using a transceiver as a safety sensor and retro-reflective photoelectric sensors as muting sensors, electrical connections are only necessary on one end, e.g. of a conveyor line.
- Always mount muting sensors so that the minimum distance to the protective device is maintained (see chapter 6.2.3).
- Always mount the muting sensors so that the material is detected and not the transport device, e.g. the pallet.
- Material must be allowed to pass through unimpeded; people must be reliably detected.

	⚠ WARNING!
⚠	**Unintentionally triggered muting may result in serious injury!** ↳ Mount the muting sensors in such a way that muting cannot be unintentionally triggered by a person, e.g. by simultaneously activating the muting sensors with a foot. ↳ Mount the muting indicator so that it is always visible from all sides.

	⚠ WARNING!
⚠	**Risk of death through inadequate protection of the muting sensors!** ↳ Protection against unintentional initiation of the (permanent) bridging function through mechanical damage and/or misalignment of muting sensors (acc. to IEC 62046).

6.2.2 Selecting optoelectronic muting sensors

Muting sensors detect material and supply the signals necessary for muting. If muting conditions are fulfilled, the safety sensor can use the signals from the muting sensors to bridge the protective function. The signals can be generated by e.g. optoelectronic sensors from Leuze:

- Dark-switching retro-reflective photoelectric sensors
- Dark-switching throughbeam photoelectric sensors
- Light-switching optical sensors

	NOTE
i	Please inform yourself of the usability in safety applications in accordance with EN ISO 13849 on our website.

6.2.3 Minimum distance for optoelectronic muting sensors

The minimum distance is the distance between the protective field of the AOPD and the detection points of the muting sensor light beams. This distance must be maintained when mounting the muting sensors to prevent the pallet or material from reaching the protective field before the muting signals can bridge the protective function of the AOPD. The minimum distance is dependent on the time needed by the system to process the muting signals.

↳ Depending on the given application, calculate the minimum distance for either timing controlled 2-sensor muting (see chapter 6.2.4) or for sequence controlled 2-sensor muting (see chapter 6.2.5).

↳ When arranging the muting sensors, make certain that the calculated minimum distance to the protective field is maintained.

6.2.4 Arrangement of the muting sensors for timing controlled 2-sensor muting

With timing controlled 2-sensor muting, throughbeam or retro-reflective photoelectric sensors are frequently used. The material can move in both directions (see chapter 4.7.1).

Prealigned muting sensor sets (accessories) for MLD safety sensors simplify the set-up of this muting solution (see figure 14.14).

NOTE	
	Mounting instructions for MLD muting sensor sets can be downloaded on the Internet at http://www.leuze.com/mld/.

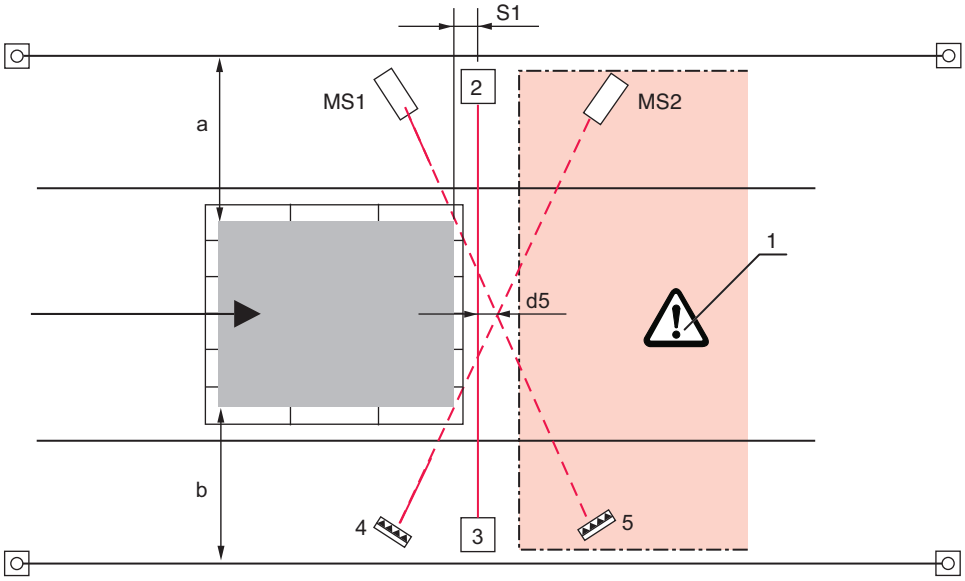

1 Danger zone
2 Muting transceiver
3 Passive deflecting mirror
4 MS2 reflector
5 MS1 reflector
MS1 Muting sensor 1
MS2 Muting sensor 2
S1 Minimum distance between the protective field of the AOPD and the detection points of the muting sensor light beams
a,b Distance between transported goods and hard guard
d5 Distance from the intersection point of the muting sensor light beams to the protective-field plane

Figure 6.8: Typical arrangement of the muting sensors for timing controlled 2-sensor muting (example acc. to IEC 62046)

With timing controlled 2-sensor muting, the beams from the muting sensors should intersect behind the protective field of the safety sensor, i.e. within the danger zone, to prevent muting from being triggered unintentionally.

Distances a and b between fixed edges and the muting object (e.g. transport material) must be such that a person cannot enter through these openings undetected while the pallet passes through the muting zone. However, if it is assumed that persons are located here, the risk of crushing must be prevented, e.g. with wicket gates, which are integrated electrically into the safety circuit.

Minimum distance S1

$$S1 \geq v \cdot 0.05\ s$$

S1 [mm] = Minimum distance between the protective field of the AOPD and the detection points of the muting-sensor light beams
v [m/s] = Speed of the material

Distance a, b

$$a, b \leq 200\ mm$$

a, b [mm] = Distance between transported goods and hard guard

Distance d5

d5 ≤ 200 mm and as small as practical

d5	[mm]	=	Distance from the intersection point of the muting-sensor light beams to the protective-field plane

If the muting material is 800 mm wide, it is transported in the middle and the distance between 2 and 3 (MLD safety light barriers) is 1160 mm. Thus, one could select 300 mm for the distance from 2 to MS2 and from 3 to reflector MS1 and 200 mm for the distance from MS1 to 2 and from 3 to reflector MS2.

Height of the muting sensor light beams d7

The two light beams of the muting sensors must have a minimum height of d7.

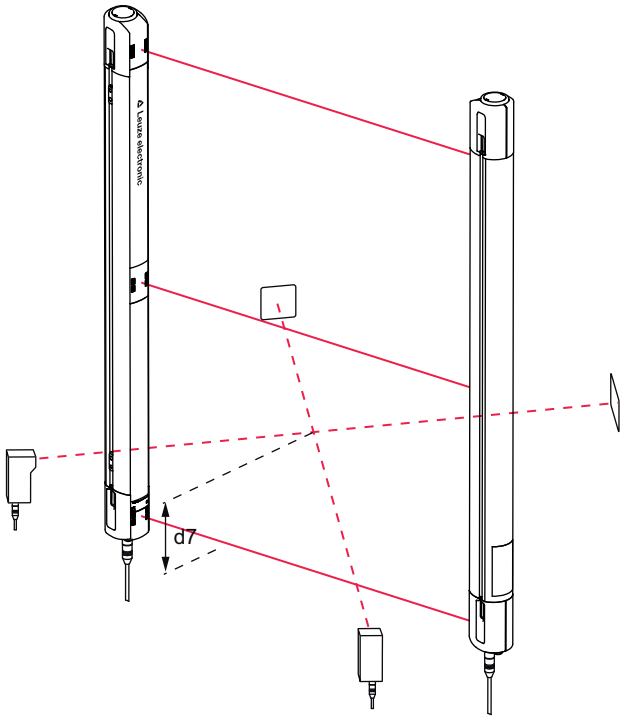

Figure 6.9: Arrangement of the muting sensors at height d7

↳ Mount the muting sensors so that the intersection point of their light beams is at the same height or higher than the lowest light beam of the safety sensor (d7).

This prevents—or hinders—manipulation with the feet since the protective field is interrupted before the muting-sensor light beam.

NOTE	
ℹ	To increase safety and make manipulation more difficult, MS1 and MS2 should, if possible, be mounted at different heights (i.e. no point-shaped intersection of the light beams).

6.2.5 Arrangement of the muting sensors for sequence controlled 2-sensor muting

With this muting operating mode, material transport is only permissible in one direction due to the arrangement of the muting sensors (see chapter 4.7.2).

Pre-mounted muting sensor sets (accessories) for MLD safety sensors simplify the set-up of this muting solution (see figure 14.14).

NOTE	
ℹ	Mounting instructions for MLD muting sensor sets can be downloaded on the Internet at http://www.leuze.com/mld/.

WARNING!	
⚠	**Risk of death by through incorrect arrangement of the muting sensors!** Only select sequence controlled 2-sensor muting for material exits (see chapter 6.2.5).

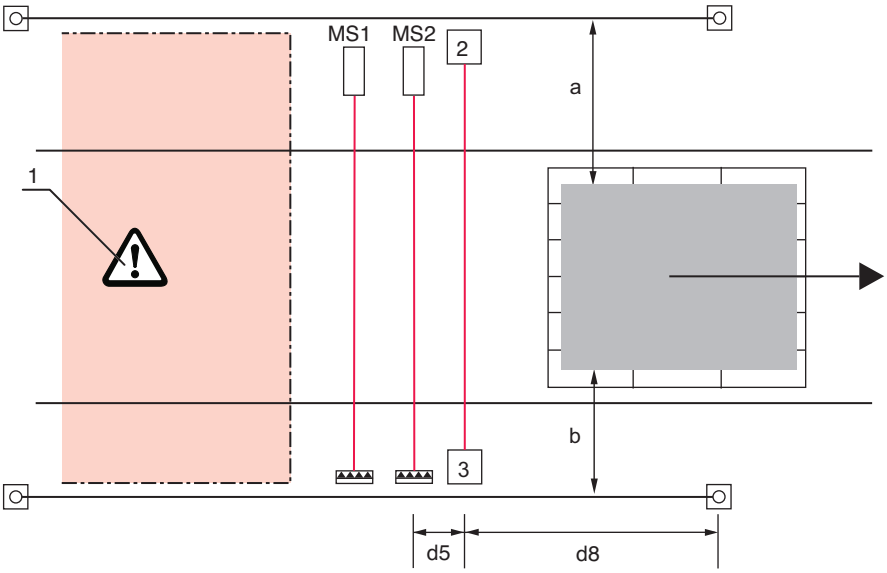

1	Danger zone
2	Muting transceiver
3	Passive deflecting mirror
MS1	Muting sensor 1
MS2	Muting sensor 2
a,b	Distance between transported goods and hard guard
d5	Distance between MS2 and AOPD
d8	Distance from the end of the mechanical protective device, e.g. a hard guard, to the protective field

Figure 6.10: Typical arrangement of the muting sensors for sequence controlled 2-sensor muting (example acc. to IEC 62046)

Distances a and b between fixed edges and the muting object (e.g. transport material) must be such that a person cannot enter through these openings undetected while the pallet passes through the muting zone. However, if it is assumed that persons are located here, the risk of crushing must be prevented, e.g. with wicket gates, which are integrated electrically into the safety circuit.

Distance a, b

$$a, b \leq 200 \text{ mm}$$

a, b [mm] = Distance between transported goods and hard guard

Distance d5, minimum (minimum distance)

$$d5 \geq v \cdot 0,05s$$

d5	[mm]	= Distance from the light-beam of MS2 vertically to the protective-field plane
v	[m/s]	= Speed of the material

Distance d5, maximum

$$d5 \leq 200 \text{ mm}$$

d5 [mm] = Distance from the light-beam of MS2 vertically to the protective-field plane

Height of the muting-sensor light beams

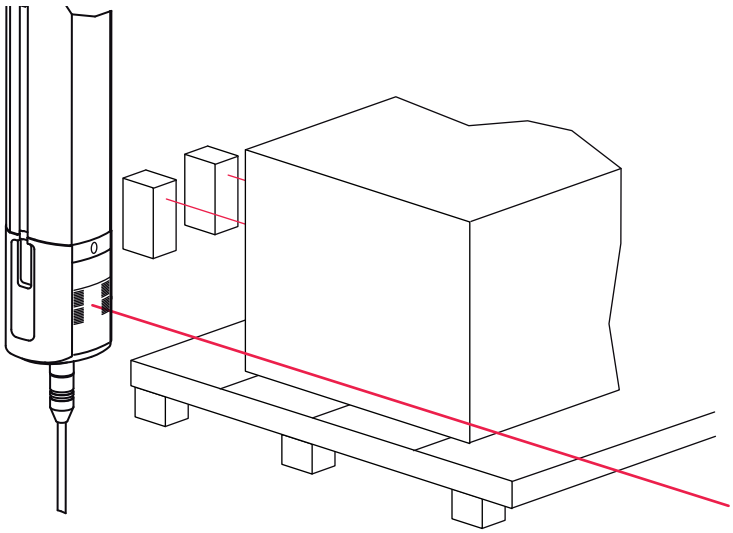

Figure 6.11: Arrangement of the muting sensors with respect to height

NOTE	
	The muting sensors should be located above the lowest beam of the safety sensor.

- Select the height of the light beams of the muting sensors so that they are above the lowest beam of the safety sensor and detect the transport material and not the pallet or transport device.
- Otherwise, you must take additional measures to prevent people from entering the danger zone on top of the pallet or transport device.

Distance d8 from the end of the mechanical protective device to the protective field

$$d8 \geq v_{max} \cdot 5s - 200mm$$

d8	[mm]	= Distance from the end of the mechanical protective device, e.g. a hard guard, to the protective field
v_{max}	[ms]	= Maximum speed of the material

6.2.6 Arrangement of the muting sensors for timing controlled 4-sensor muting

(MLD 335, MLD 535)

With this muting operating mode, material transport is permissible in both directions. The muting sensor light beams are parallely arranged (see chapter 4.7.3).

Pre-mounted muting sensor sets (accessories) for MLD safety sensors simplify the set-up of this muting solution (see figure 14.14).

NOTE	
	Mounting instructions for MLD muting sensor sets can be downloaded on the Internet at http://www.leuze.com/mld/.

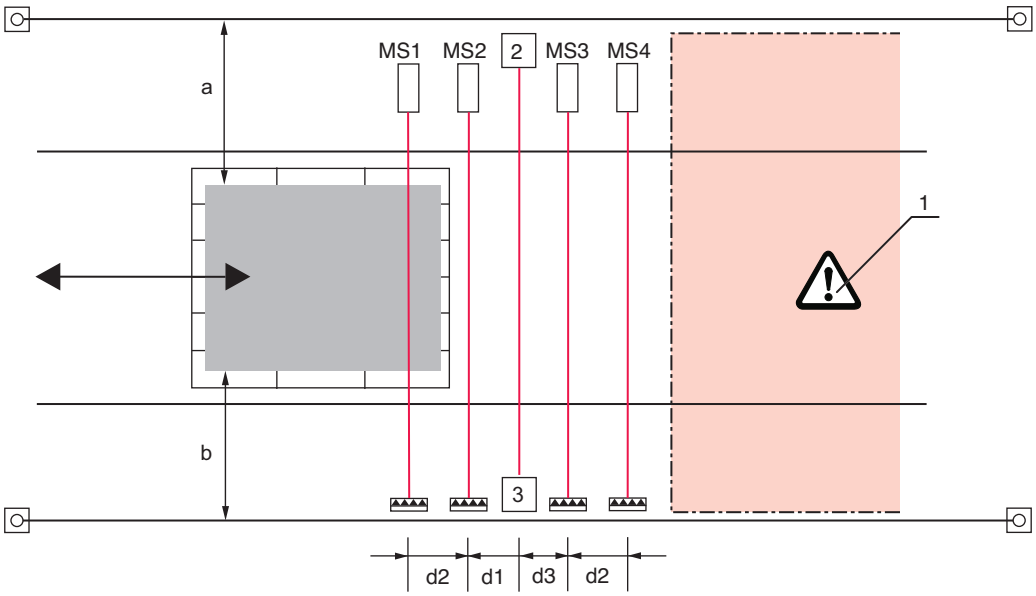

1	Danger zone
2	Muting transceiver
3	Passive deflecting mirror
MS1	Muting sensor 1
MS2	Muting sensor 2
MS3	Muting sensor 3
MS4	Muting sensor 4
a,b	Distance between transported goods and hard guard
d1	Distance between MS2 and AOPD
d3	Distance between MS3 and AOPD
d2	Distance between MS1 (MS4) and MS2 (MS3)

Figure 6.12: Typical arrangement of the muting sensors for timing controlled 4-sensor muting (example acc. to IEC 62046)

Distances a and b between fixed edges and the muting object (e.g. transport material) must be such that a person cannot enter through these openings undetected while the pallet passes through the muting zone. However, if it is assumed that persons are located here, the risk of crushing must be prevented, e.g. with wicket gates, which are integrated electrically into the safety circuit.

Distance a, b

$a, b \leq 200$ mm

a, b [mm] = Distance between transported goods and hard guard

Distance d1

$d1 \leq 200$ mm

d1 [mm] = Distance from MS2 muting sensor to AOPD

Distance d3

$d3 \leq 200$ mm

d3 [mm] = Distance from MS3 to AOPD

Distance d2

$d2 > 250$ mm

d2 [mm] = Distance between MS1 and MS2

Height of the muting-sensor light beams

The same conditions apply as with sequence controlled 2-sensor muting (see figure 6.11).

- Select the height of the light beams of the muting sensors so that the transport material is detected and not the pallet or transport device.
- Otherwise, you must take additional measures to prevent people from entering the danger zone on top of the pallet or transport device.

6.3 Mounting the safety sensor

Proceed as follows:

- Select the type of fastening, e.g. swivel mount (see chapter 6.3.2) or clamp bracket (see chapter 6.3.3).
- Have a suitable tool at hand and mount the safety sensor in accordance with the notices regarding the mounting locations (see chapter 6.3.1).
- If possible, affix safety notice stickers on the mounted safety sensor or device column.

After mounting, you can electrically connect (see chapter 7), start up, align (see chapter 8), and test (see chapter 9.1) the safety sensor.

6.3.1 Suitable mounting locations

Area of application: Mounting
Tester: Technician who mounts the safety sensor

Table 6.4: Checklist for mounting preparations

Check:	Yes	No
Do the beam heights satisfy the requirement of EN ISO 13855 (see chapter 6.1.2)?		
Is the safety distance to the point of operation maintained (see chapter 6.1.3)?		
Is the minimum distance to reflective surfaces maintained (see chapter 6.1.5)?		
Is it impossible for safety sensors that are mounted next to one another to mutually interfere with one another (see chapter 6.1.6)?		
Can the point of operation or the danger zone only be accessed through the protective field?		
Has bypassing the protective field by crawling under, reaching over, or jumping over been prevented?		
Do the transmitter and receiver connections point in the same direction? With transceiver systems: do the name plates of transceiver and mirror face in the same direction?		
Can the transmitter and receiver or transceiver and deflecting mirror be mounted vertically (level) and at the same height on a flat surface?		
Can the transmitter and receiver or transceiver and deflecting mirror be secured in such a way that they cannot be moved or turned?		
Is the safety sensor accessible for testing and replacing?		
Is it impossible to actuate the start/restart button from within the danger zone?		
Can the entire danger zone be seen from the location at which the start/restart button is mounted?		

6.3.2 Swivel mount BT-SET-240 (optional)

With the swivel mount made of diecast zinc, the safety sensor can be turned 240° on its own axis, easily aligned and reliably mounted. Two models are available: BT-SET-240B with counterholder (for transmitter

and receiver, top) and BT-SET-240C with clamping ring (for transmitter and receiver, connection side or for deflecting mirror top/bottom).

Opening covers for mounting brackets on the device

When using the BT-SET-240 swivel mounts, remove the covers as follows:

- At the indicated points, press the cover until it opens on the opposite side.
- Using a pointed object or your fingernail, pry the cover loose.

The cover can be removed.

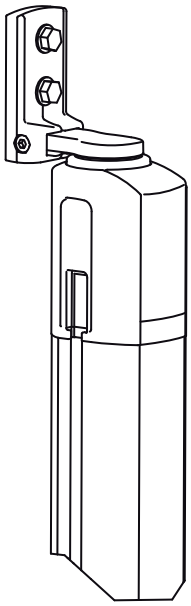

Figure 6.13: BT-SET-240B swivel mount

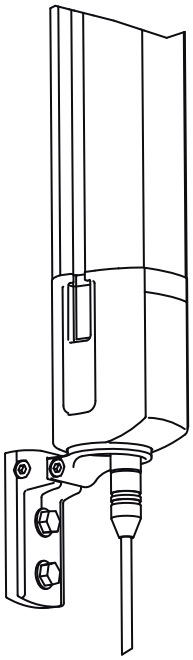

Figure 6.14: BT-SET-240C swivel mount

NOTE	
	Detailed mounting instructions for the swivel mounts can be downloaded on the Internet at http://www.leuze.com/mld/

6.3.3 BT-P40 clamp bracket (optional)

The BT-P40 clamp brackets are also available in device columns DC/UDC-...-S1 for mounting with sliding blocks. The clamp brackets can be used to flexibly adjust the safety sensor in height and secure its vertical position.

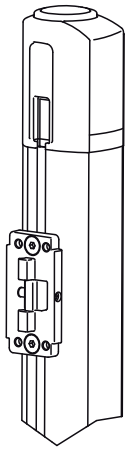

Figure 6.15: BT-P40 clamp bracket

6.3.4 BT-2SB10 clamp swiveling mounting bracket (optional)

The BT-2SB10 swiveling mounting bracket can be mounted on the lateral C-groove of the MLD. Depending on the installation situation, the MLD with bracket can be mounted either on the sensor back or side. For increased mechanical requirements, the brackets are also available in vibration-damping form (BT-2SB10-S).

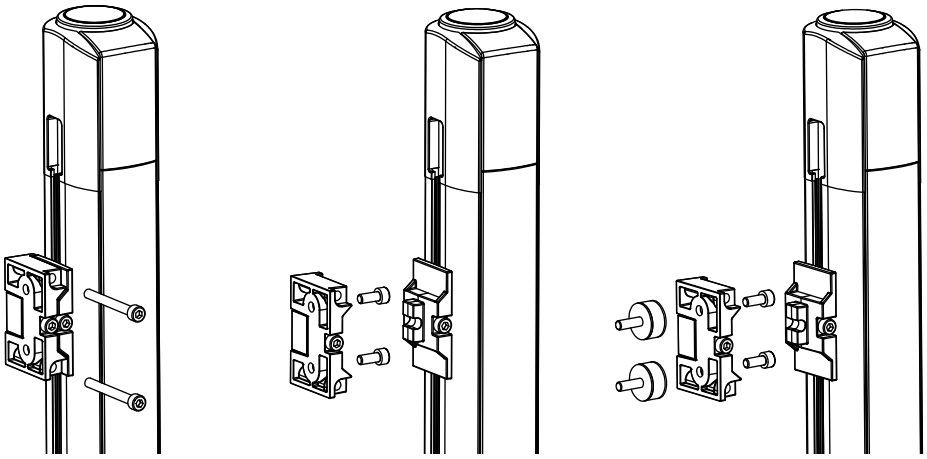

Figure 6.16: BT-2SB10 clamp swiveling mounting bracket

7 Electrical connection

	⚠ WARNING!
	Improper electrical connection may result in serious injury! ↳ Only allow competent persons (see chapter 2.2) to perform the electrical connection.

	⚠ WARNING!
	Improper function selection may result in serious injury! ↳ For access guarding, switch on the start/restart interlock and make certain that it cannot be unlocked from within the danger zone. ↳ Select the functions so that the safety sensor can be used as intended (see chapter 2.1). ↳ Select the functions for the safety sensor (see chapter 7.2 or see chapter 7.3). ↳ Always connect an external safety monitoring device (e.g. Leuze MSI-T) to the receiver of the MLD 312 and select the restart interlock in this safety monitoring device. ↳ If a safety sensor with an integrated AS-i interface is used, it must be ensured that the AS-i power supply unit indicates safe mains separation according to IEC 60742 and bridges short power failures of up to 20 ms.

	NOTE
	Laying cables! ↳ Lay all connection cables and signal lines within the electrical installation space or permanently in cable ducts. ↳ Lay the cables and lines so that they are protected against external damages. ↳ For further information: see EN ISO 13849-2, Table D.4.

7.1 Pin assignment transmitter and receiver

7.1.1 Standard pin assignment

Transmitter and receiver (transceiver) are equipped with M12 connectors. The transmitter has a 5-pin plug, the receiver/transceiver has a 5- or 8-pin plug, MLD 330 and MLD 530 also have a 5-pin socket, MLD 335 and MLD 535 have an 8-pin socket. This is used for connecting the signals of the muting sensors. Alternatively, the sensors can be directly connected via the AC-SCMx connection box. The socket is A-coded.

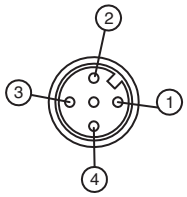

1	Brown
2	White
3	Blue
4	Black

Figure 7.1: Pin assignment **transmitter** MLD 300, MLD 500

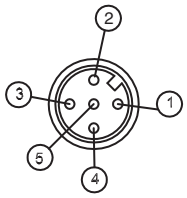

1 Brown
2 White
3 Blue
4 Black
5 Gray

Figure 7.2: Pin assignment **receiver** MLD 310, MLD 312, MLD 510

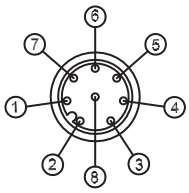

1 White
2 Brown
3 Green
4 Yellow
5 Gray
6 Pink
7 Blue
8 Red

Figure 7.3: Pin assignment **receiver** MLD 320, MLD 330, MLD 335, MLD 520, MLD 530, MLD 535

Table 7.1: Pin assignment MLD transmitter and receiver

Pin	Transmitter MLD 300, MLD 500	MLD 310, MLD 510	MLD 312, testable	MLD 320, MLD 520	MLD 330, MLD 335, MLD 530, MLD 535 (operating mode 1, 2, 4)	MLD 330, MLD 335, MLD 530, MLD 535 (operating mode 3, 5, 6)
1	+24 V	+24 V	+24 V	RES/OSSD status signal	RES/OSSD status signal	RES/OSSD status signal
2	Laser	OSSD1	Test	+24 V	+24 V	0 V
3	0 V	0 V	0 V	EDM	EDM (not for operating mode 4)	EDM (not for operating mode 6)
4	Range	OSSD2	OSSD	MODE	MS2 (optional, not for operating mode 1)	MS2 (optional, not for operating mode 5)
5	n.c.	n.c.	n.c.	OSSD2	OSSD2	OSSD2
6	n/a	n/a	n/a	OSSD1	OSSD1	OSSD1
7	n/a	n/a	n/a	0 V	0 V	+24 V
8	n/a	n/a	n/a	n.c.	M-EN/TO [b)]	M-EN/TO [a)]

a) M-EN/TO ... Muting-Enable/-Timeout

The operating mode for device models MLD 320, MLD 520, MLD 330, MLD 335, MLD 530 and MLD 535 is dependent on the pin assignment of the 8-pin plug and can be changed when the device is in a de-energized state. On device start-up, the software determines the parameters that have been set in this way. Type 2 device models MLD 310, MLD 510 and MLD 312 and the transmitters are not configured.

7.1.2 Pin assignment of local socket

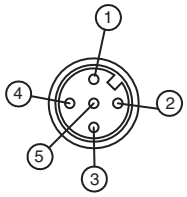

1 Brown
2 White
3 Blue
4 Black
5 Gray

Figure 7.4: Assignment 5-pin socket - receiver MLD 330, MLD 530

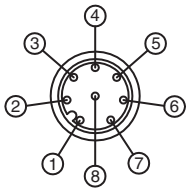

1 White
2 Brown
3 Green
4 Yellow
5 Gray
6 Pink
7 Blue
8 Red

Figure 7.5: Assignment 8-pin socket - receiver MLD 335, MLD 535

Table 7.2: Pin assignment 5- or 8-pin socket (for muting sensors, muting display and start/restart/ muting restart button)

Pin	MLD 330/MLD 530 (5-pin)	MLD 335, MLD 535 (8-pin)
1	+24 V	MS3
2	MS2	+24 V
3	0 V	MS2
4	MS1	MS1
5	RES/LMP	RES/LMP
6	---	MS4
7	---	0 V
8	---	---

⚠ WARNING!

Impairment of the protective function due to faulty muting signals

↳ The ground connection of receiver/transceiver MLD x30/MLDx335 must be wired between the ground connections of muting signals MS1 and MS2. For the muting sensors and the safety sensor, a shared power supply unit is to be used. The connection lines of the muting sensors must be laid separated from one another and protected.

7.1.3 AS-i pin assignment

The MLD/500 AS-i safety sensor has an interface for connecting to the safe AS-i bus and, optionally, an interface for connecting an external muting indicator.

If necessary, grounding via sliding blocks with ground contact or on the thread of the M12 connector is possible.

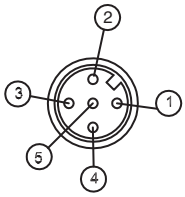

Figure 7.6: MLD 500/AS-i pin assignment (transmitter, receiver/transceiver, connection socket for external muting indicator)

Table 7.3: MLD 500/AS-i pin assignment transmitter and receiver/transceiver as well as connection socket for external muting indicator

Pin	Transmitter MLD 500/AS-i	Receiver/transceiver MLD 500/AS-i	Receiver/transceiver MLD 500/AS-i with external muting indicator [a)]
1	AS-i +	AS-i +	AS-i +
2			0 V (auxiliary supply)
3	AS-i -	AS-i -	AS-i -
4			+24 V DC (auxiliary supply)
5			

a) A separate auxiliary supply may be necessary depending on the power consumption of the external muting indicator

7.1.4 AS-i signal assignment

Optionally, 100 ms and 500 ms restart delay times can be set via the P0 parameter (see table 7.4). The P1 parameter contains the interfering signal information delivered by the receiver/transceiver. To read out, the AS-i master must configure the P1 parameter with 1 (parameter call P1=1). If 1 is still displayed in parameter P1 after reading back, no interference has occurred. If parameter P1 is changed to 0, a periphery error has occurred.

NOTE	
i	The parameter port can only be addressed by the bus master. None of the signals may be used for safety-relevant purposes.

Table 7.4: Machine interface AS-i signal assignment (receiver/transceiver)

Assignment	Bit	Signal assignment
A	D0	Muting indicator display (= AS-i slave)
E	DI0...DI3	Code sequence in accordance with AS-i Safety at Work
A	P0	Restart delay time after beam interruption P0 = 0 ® 100 ms P0 = 1 ® 500 ms
E	P1	Interfering signal in case of interference (P1=1), e.g. due to contamination or a fault in the periphery (P1=0)

7.2 Selecting contactor monitoring and start/restart interlock

(MLD 320, MLD 330, MLD 335, MLD 520, MLD 530, MLS 535)

Contactor monitoring and start/restart interlock are configured via pins 1, 3 and 4. The feedback circuit for contactor monitoring, if selected, is connected at pin 3; the restart button for the start/restart interlock is connected at pin 1. Pin 4 configures the start/restart interlock.

Operating modes EDM and RES are configured as follows:

Table 7.5: EDM/RES configuration

	MLD 320, MLD 520	MLD 320, MLD 330 [a], MLD 335 [a], MLD 520, MLD 530 [a], MLD 535 [a]	MLD 320, MLD 520	MLD 320, MLD 330 [a] [b], MLD 335 [a] [b], MLD 520, MLD 530 [a] [b], MLD 535 [a] [b]
Pin and function	**Without EDM, without RES**	**Without EDM, with RES**	**With EDM, without RES**	**With EDM, with RES**
Pin 3, EDM	+24 V	+24 V	0 V via closed feedback circuit	0 V via closed feedback circuit
Pin 4, mode	Bridge to pin 1	+24 V	Bridge to pin 1	+24 V

a) For MLD 330, MLD 335, MLD 530 and MLD 535, pin 4 does not need to be wired for RES (RES always active)

b) EDM is not possible in operating modes 4 and 6

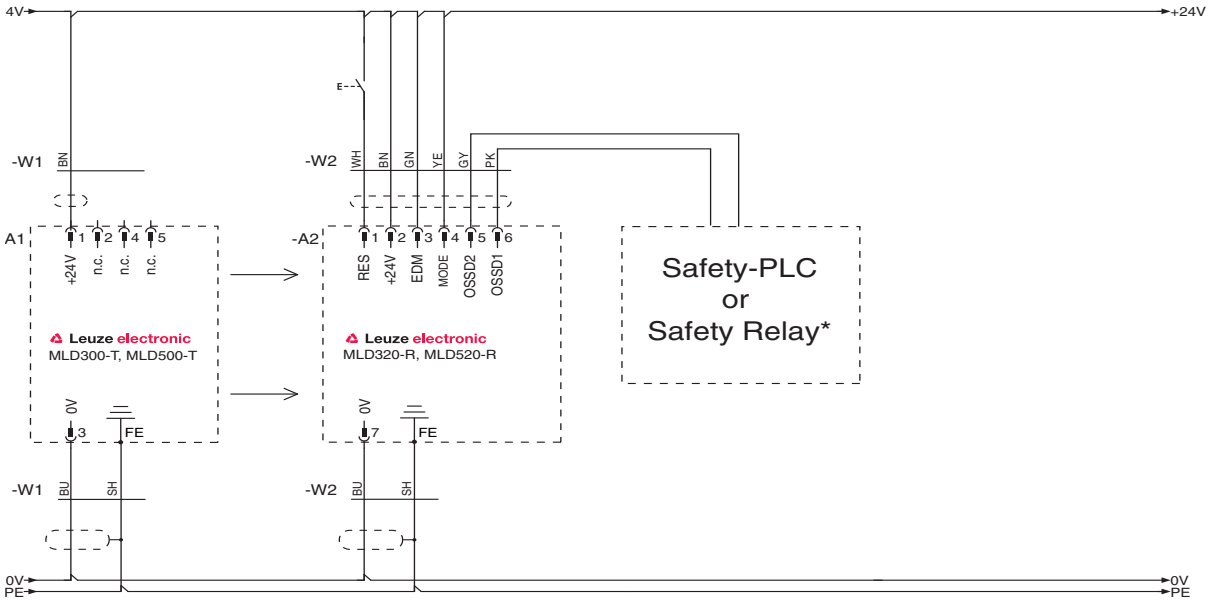

* Optional: reset via PLC or RES button

Figure 7.7: Connection example MLD 320, MLD 520 (transmitter-receiver system) without EDM, with RES (transceiver connected in an analogous manner)

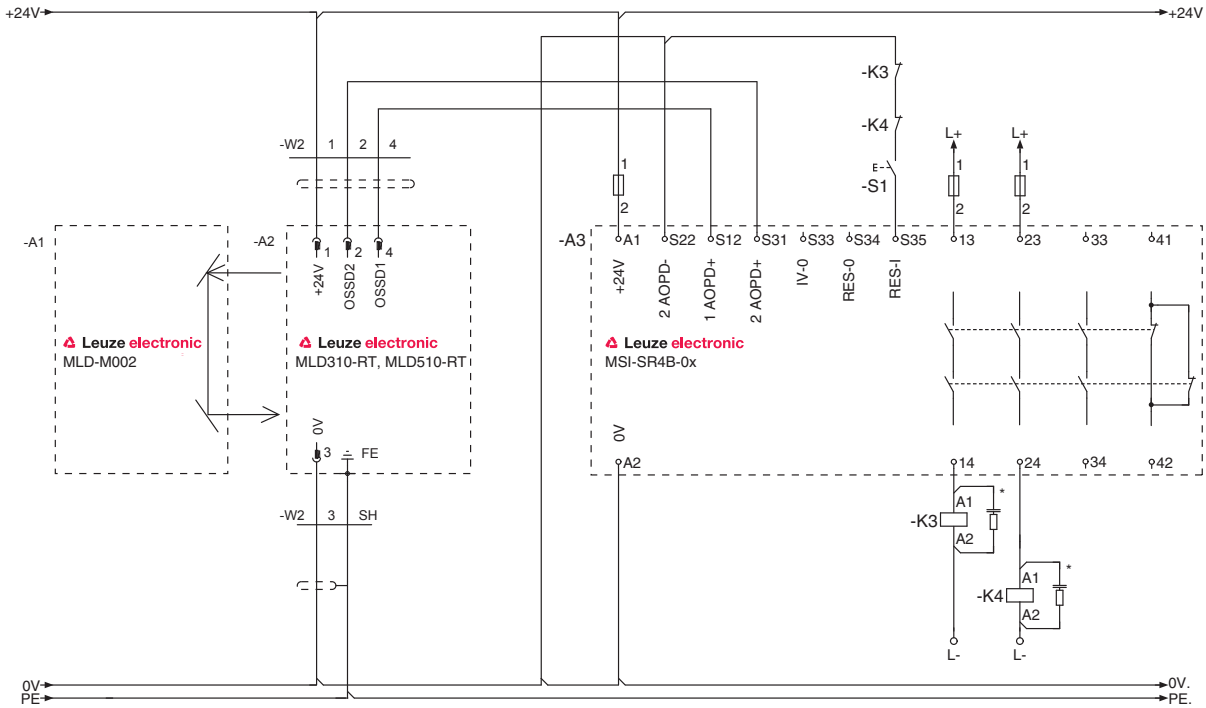

Figure 7.8: Connection example MLD 510 (transceiver system) with EDM; RES in MSI-SR4B-0x safety relay

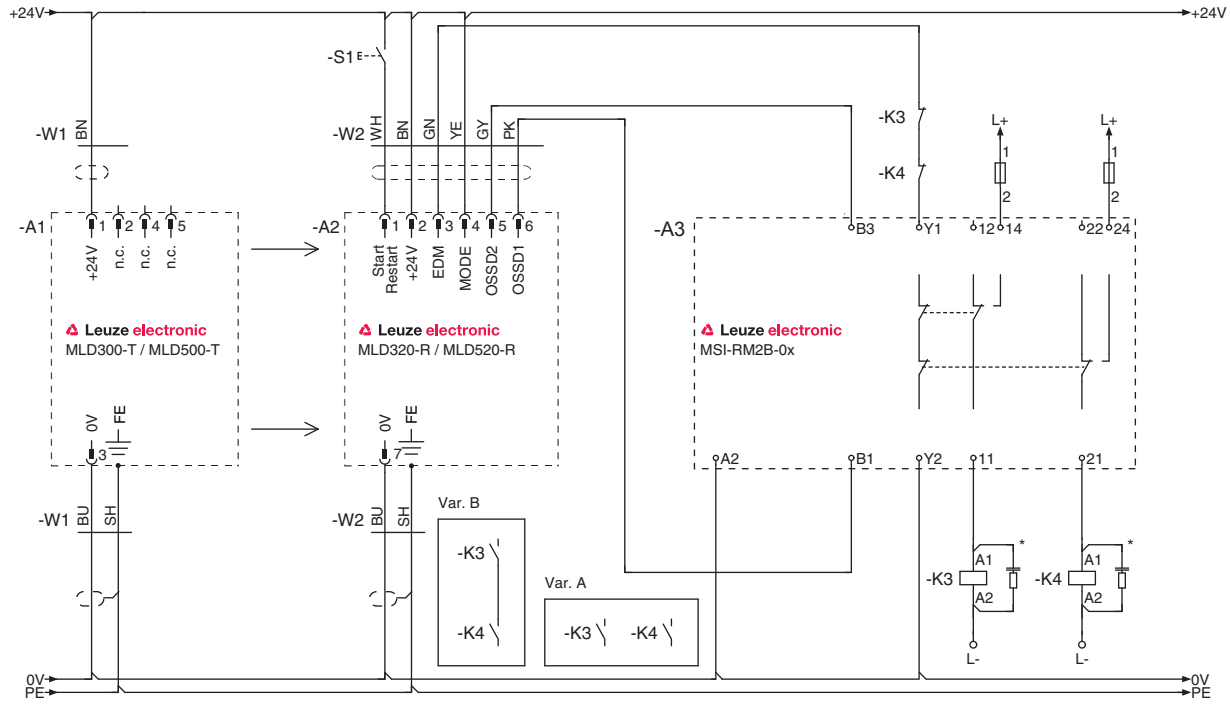

Figure 7.9: Connection example MLD 320, MLD 520 (transmitter-receiver system) and MSI-RM2B-0x, with EDM and RES (transceiver connected in an analogous manner)

7.3 Selecting the muting operating modes

(MLD 330, MLD 335, MLD 530, MLD 535)

The MLD 330, MLD 335, MLD 530 and MLD 535 device models include the following functions in addition to EDM and RES:

- Muting timeout 10 min / 100 h
- Partial muting
- Muting signal 2 as control signal (MS2 can also be connected to the 8-pin plug here)
- Muting-timeout extension
- Muting restart
- Timing controlled 2-sensor muting
- Sequence controlled 2-sensor muting

These functions can be selected via the respective operating mode (see table 7.6).

Table 7.6: MLD 330, MLD 530 configuration

	Functions							Operating mode selection		
Operating mode	RES	EDM, selectable	Muting type	Muting timeout	Muting-timeout extension, M/TO	Muting-enable	Partial muting, only with transmitter-receiver systems	Plug pin 2	Plug pin 7	Plug pin 1
1	•	•	Timing controlled 2-sensor muting	10 min	•			+24 V	0 V	Bridge to pin 4
2	•	•	Timing controlled 2-sensor muting	100 h				+24 V	0 V	Bridge to pin 8
3	•	•	Sequence controlled 2-sensor muting	10 min				0 V	+24 V	Bridge to pin 8
4	•		Sequence controlled 2-sensor muting	100 h				+24 V	0 V	Bridge to pin 3
5	•	•	Timing controlled 2-sensor muting	10 min	•	•		0 V	+24 V	Bridge to pin 4
6	•		Timing controlled 2-sensor muting	10 min	•		•	0 V	+24 V	Bridge to pin 3

The desired muting operating mode is selected via pins 2 and 7 (supply voltage) as well as via a bridge between pin 1 and another pin.

Table 7.7: MLD 335, MLD 535 configuration

	Functions							Operating mode selection		
Operating mode	RES	EDM, selectable	Muting type	Muting timeout	Muting-timeout extension, M/TO	Muting-enable	Partial muting, only with transmitter-receiver systems	Plug pin 2	Plug pin 7	Plug pin 1
1	•	•	Timing controlled 4-sensor muting	10 min	•			+24 V	0 V	Bridge to pin 4
2	•	•	Timing controlled 4-sensor muting	100 h				+24 V	0 V	Bridge to pin 8
3	•	•	Sequence controlled 2-sensor muting	10 min				0 V	+24 V	Bridge to pin 8
4	•		Sequence controlled 2-sensor muting	100 h				+24 V	0 V	Bridge to pin 3
5	•	•	Timing controlled 4-sensor muting	10 min	•	•		0 V	+24 V	Bridge to pin 4
6	•		Timing controlled 4-sensor muting	10 min	•		•	0 V	+24 V	Bridge to pin 3

The desired muting operating mode is selected via pins 2 and 7 (supply voltage) as well as via a bridge between pin 1 and another pin.

7.3.1 Operating mode 1 (muting):

- Start/restart interlock is selected
- Contactor monitoring is selectable
- Muting timeout extension is selectable

Table 7.8: Selection of the operating mode and other functions

Pin	Connection
Operating mode selection	
2	+24 V
7	0 V
4	Bridge to pin 1
Other functions	
1	RES (via start button at +24 V)
3	EDM (without EDM: +24 V; with EDM: 0 V via feedback circuit)

Pin	Connection
5	OSSD2
6	OSSD1
8	M-TO (muting-timeout extension)

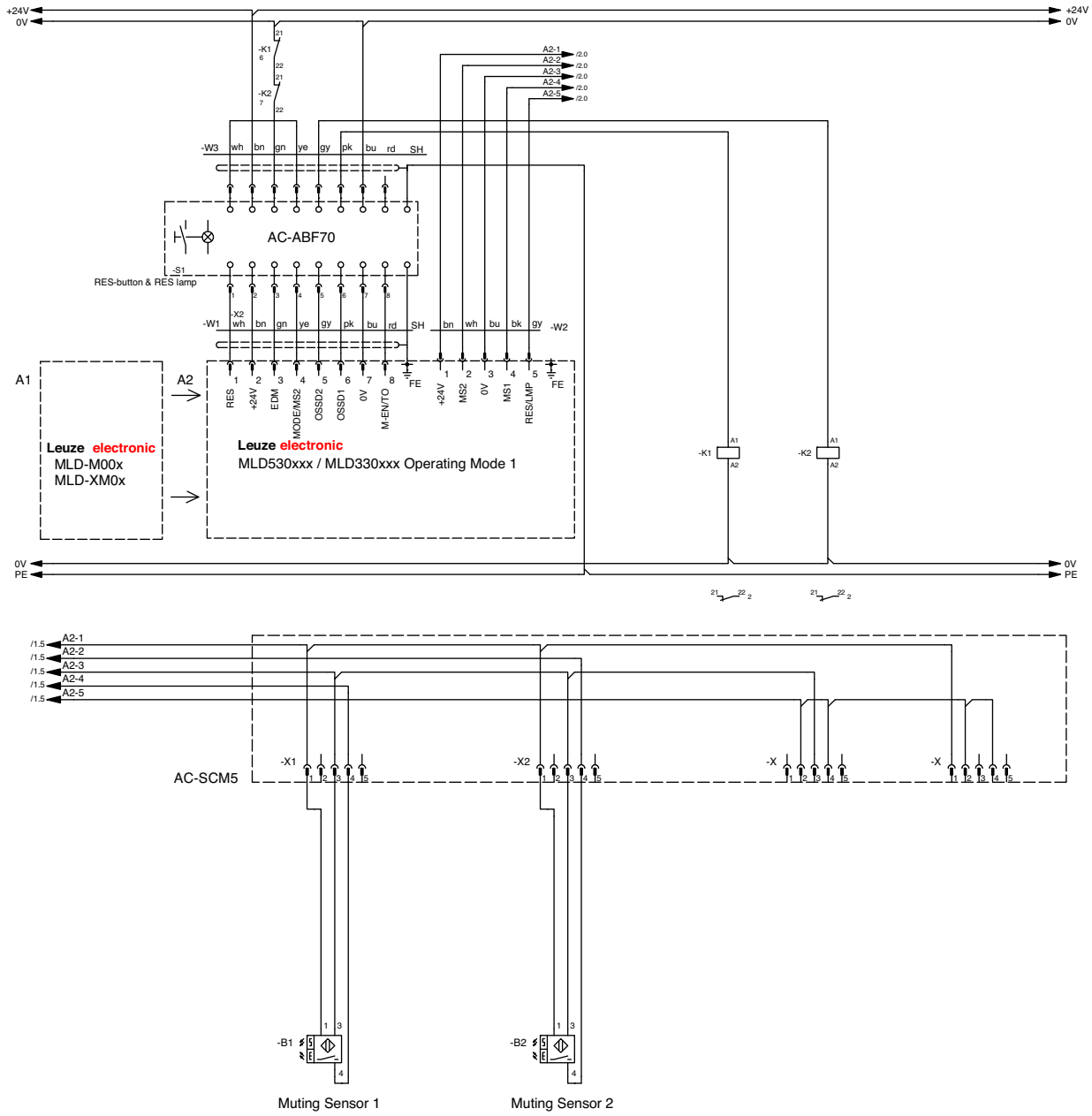

Figure 7.10: Connection example MLD 330, MLD 530 (transmitter-receiver system): timing controlled 2-sensor muting with muting timeout 10 min (transceiver connected in an analogous manner)

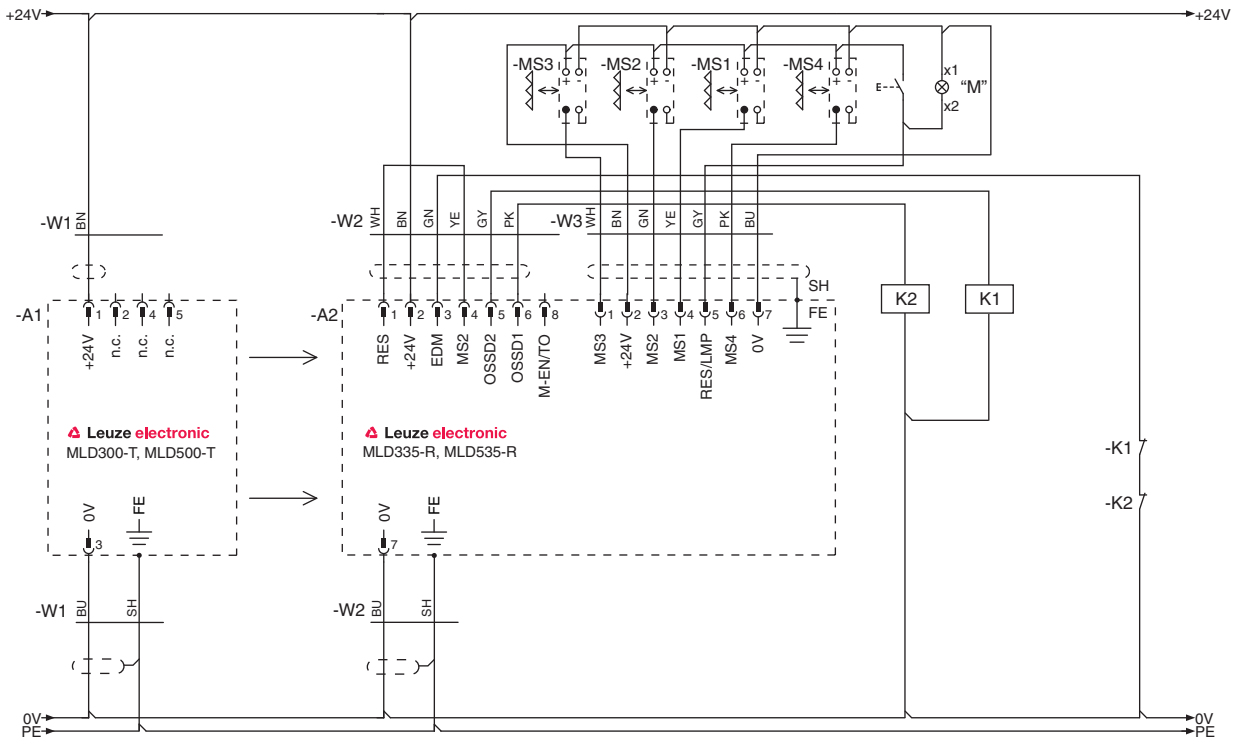

Figure 7.11: Connection example MLD 335, MLD 535 (transmitter-receiver system): timing controlled 4-sensor muting with muting timeout 10 min (transceiver connected in an analogous manner)

7.3.2 Operating mode 2 (muting timeout 100 h):

- Start/restart interlock is selected
- Contactor monitoring is selectable
- Muting timeout is max. 100 h
- If a second muting signal is supplied e.g. by a control, this can also be connected here at the 8-pin plug.

Table 7.9: Selection of the operating mode and other functions

Pin	Connection
Operating mode selection	
2	+24 V
7	0 V
8	Bridge to pin 1
Other functions	
1	RES (via start button at +24 V)
3	EDM (without EDM: +24 V; with EDM: 0 V via feedback circuit)
4	MS2 (second muting signal can also be connected here)
5	OSSD2
6	OSSD1
8	

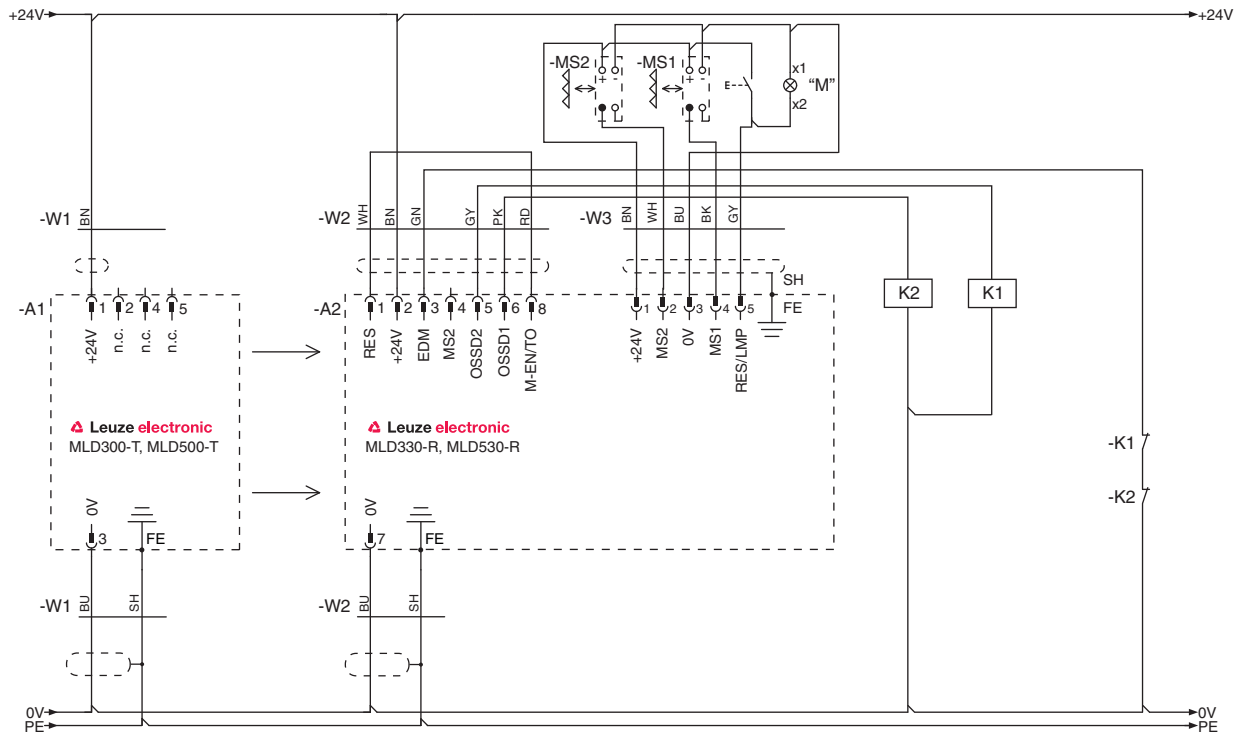

Figure 7.12: Connection example MLD 330, MLD 530 (transmitter-receiver system): timing controlled 2-sensor muting with muting timeout 100 h (transceiver connected in an analogous manner)

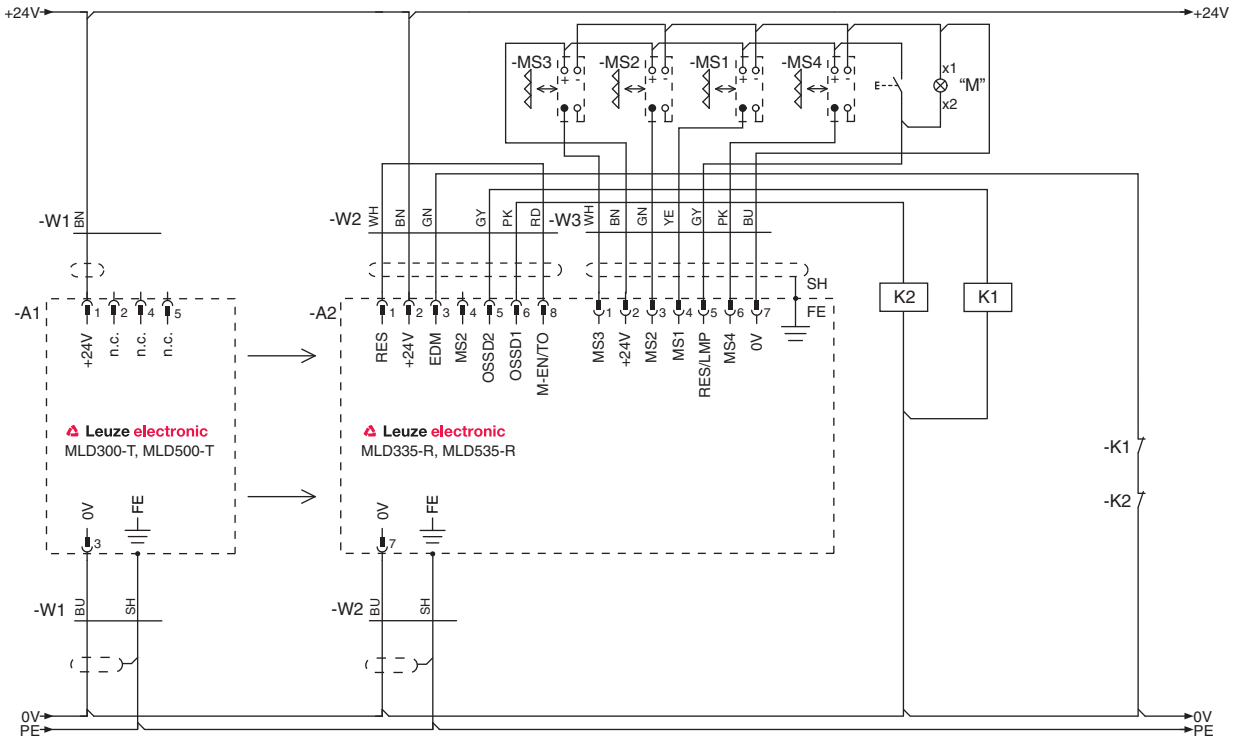

Figure 7.13: Connection example MLD 335, MLD 535 (transmitter-receiver system): timing controlled 4-sensor muting (transceiver connected in an analogous manner)

7.3.3 Operating mode 3 (sequence controlled 2-sensor muting):

- Start/restart interlock is selected
- Contactor monitoring is selectable
- Second muting signal can be connected via the machine interface (i.e. signal comes from the control)

Table 7.10: Selection of the operating mode and other functions

Pin	Connection
Operating mode selection	
2	0 V
7	+24 V
8	Bridge to pin 1
Other functions	
1	RES (via start button at +24 V)
3	EDM (without EDM: +24 V; with EDM: 0 V via feedback circuit)
4	MS2 (second muting signal can also be connected here)
5	OSSD2
6	OSSD1

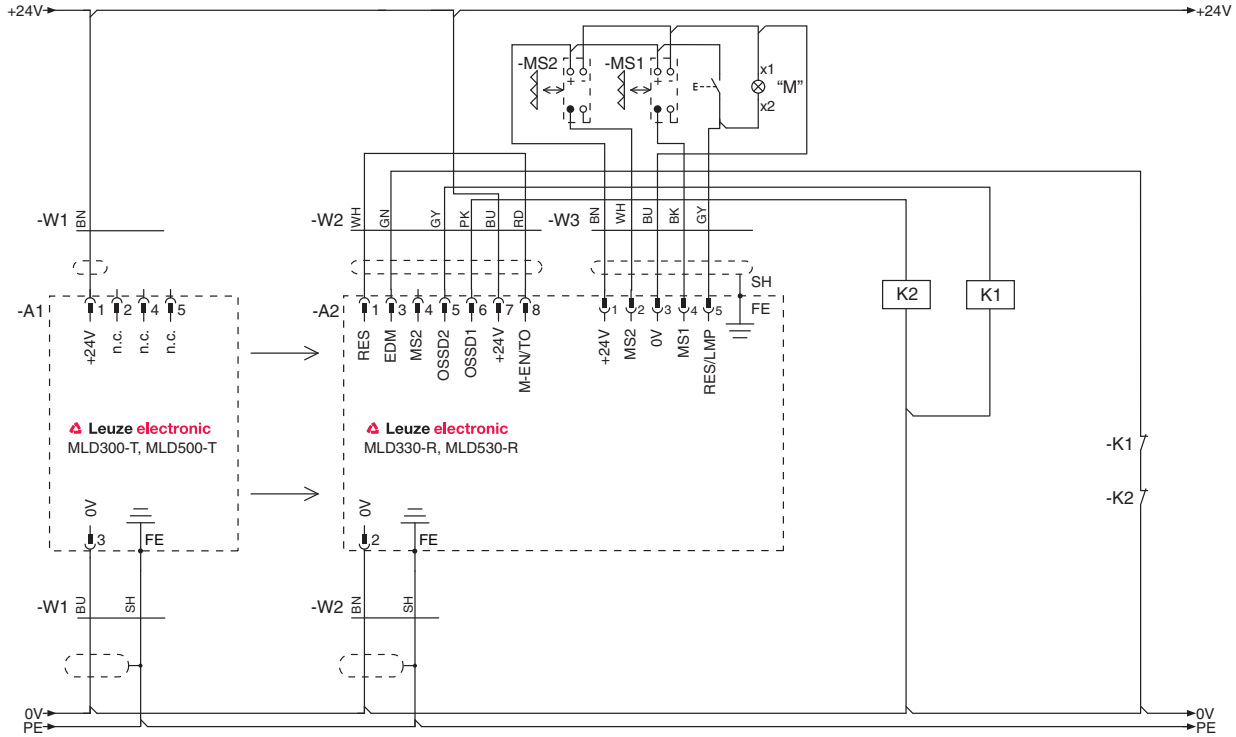

Figure 7.14: Connection example MLD 330, MLD 530 (transmitter-receiver system): sequence controlled 2-sensor muting (transceiver connected in an analogous manner)

7.3.4 Operating mode 4 (sequence controlled 2-sensor muting with muting timeout 100 h):

- Start/restart interlock is selected
- No contactor monitoring
- If a second muting signal is supplied e.g. by a control, this can also be connected here at the 8-pin plug.

Table 7.11: Selection of the operating mode and other functions

Pin	Connection
Operating mode selection	
2	+24 V
7	0 V
3	Bridge to pin 1
Other functions	
1	RES (via start button at +24 V)
4	MS2 (second muting signal can also be connected here)
5	OSSD2
6	OSSD1

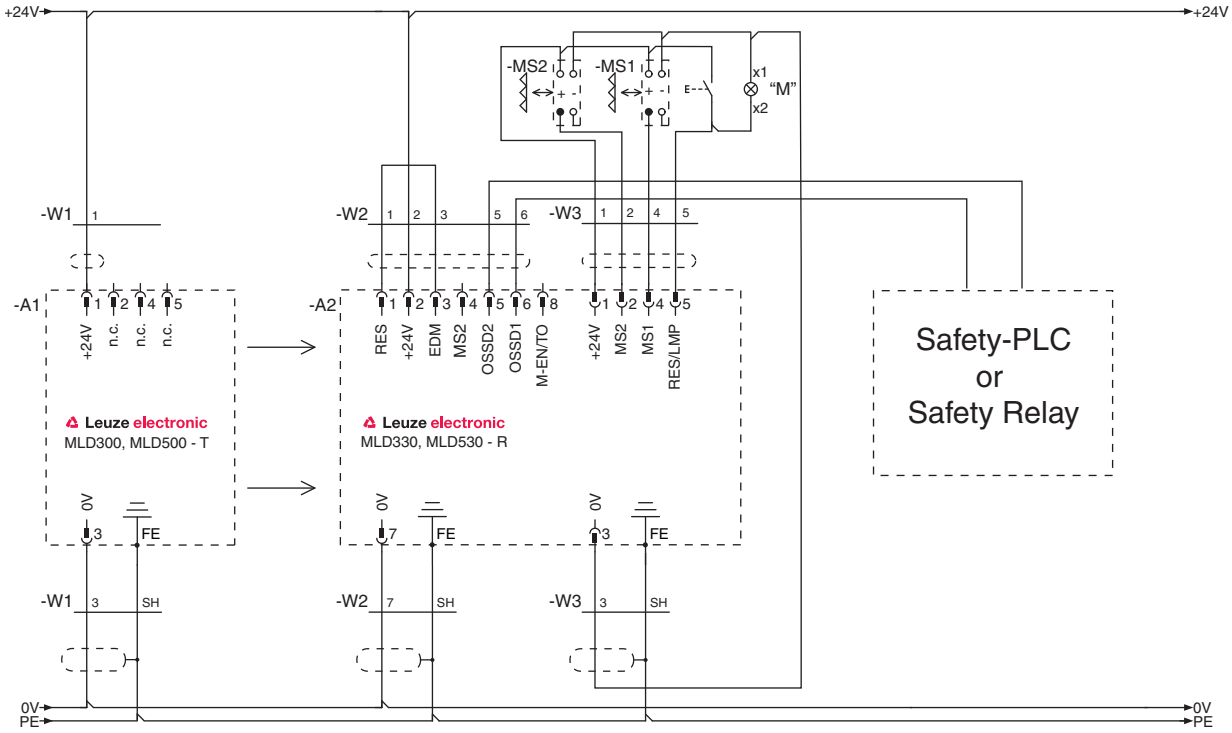

Figure 7.15: Connection example MLD 330, MLD 530 (transmitter-receiver system): sequence controlled 2-sensor muting with muting timeout 100 h (transceiver connected in an analogous manner)

7.3.5 Operating mode 5 (muting-enable):

- Start/restart interlock is selected
- Contactor monitoring is selectable
- Muting timeout extension is selectable
- Muting-enable is activated

Table 7.12: Selection of the operating mode and other functions

Pin	Connection
Operating mode selection	
2	0 V
7	+24 V
4	Bridge to pin 1
Other functions	
1	RES (via start button at +24 V)
3	EDM (without EDM: +24 V; with EDM: 0 V via feedback circuit)
5	OSSD2
6	OSSD1
8	Muting-enable / M-TO (muting-timeout extension)

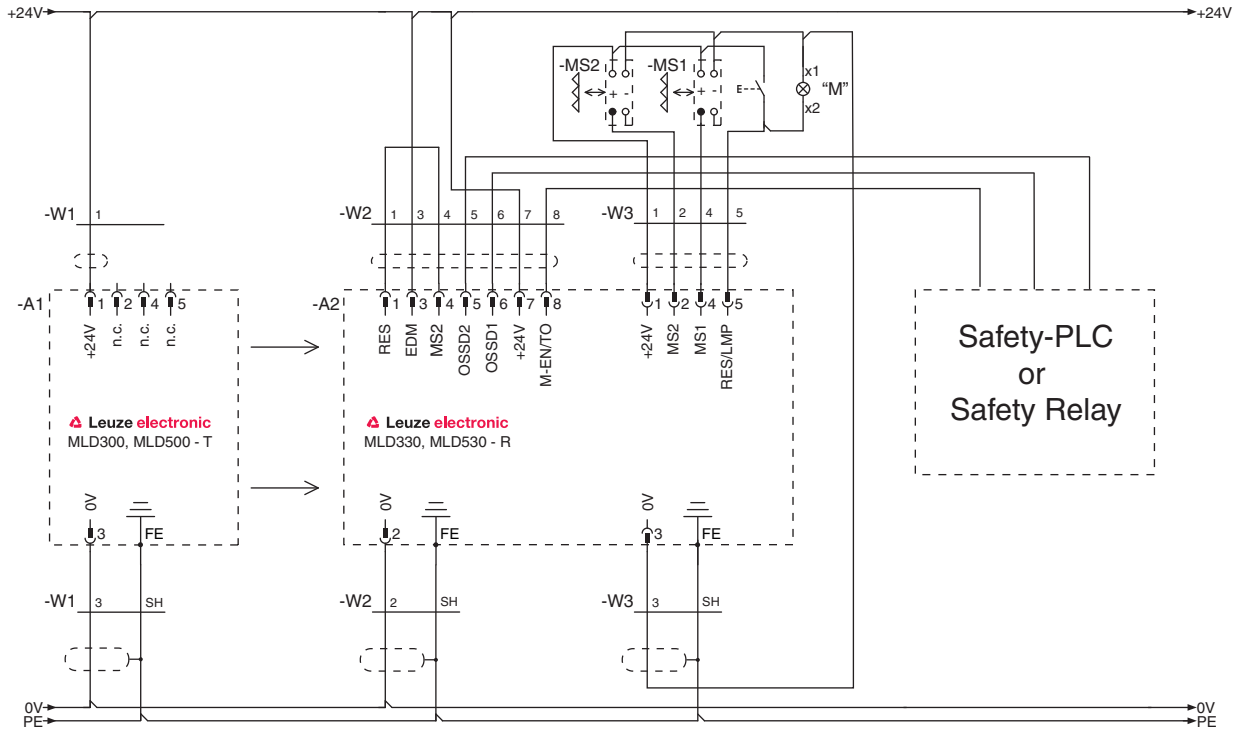

Figure 7.16: Connection example MLD 330, MLD 530 (transmitter-receiver system): muting-enable (transceiver connected in an analogous manner)

7.3.6 Operating mode 6 (partial muting):

- Start/restart interlock is selected
- Muting timeout extension is selectable
- If a second muting signal is supplied e.g. by a control, this can also be connected here at the 8-pin plug.

Table 7.13: Selection of the operating mode and other functions

Pin	Connection
Operating mode selection	
2	0 V
7	+24 V
3	Bridge to pin 1
Other functions	
1	RES (via start button at +24 V)
4	MS2 (second muting signal can also be connected here)
5	OSSD2
6	OSSD1
8	M-TO (muting-timeout extension)

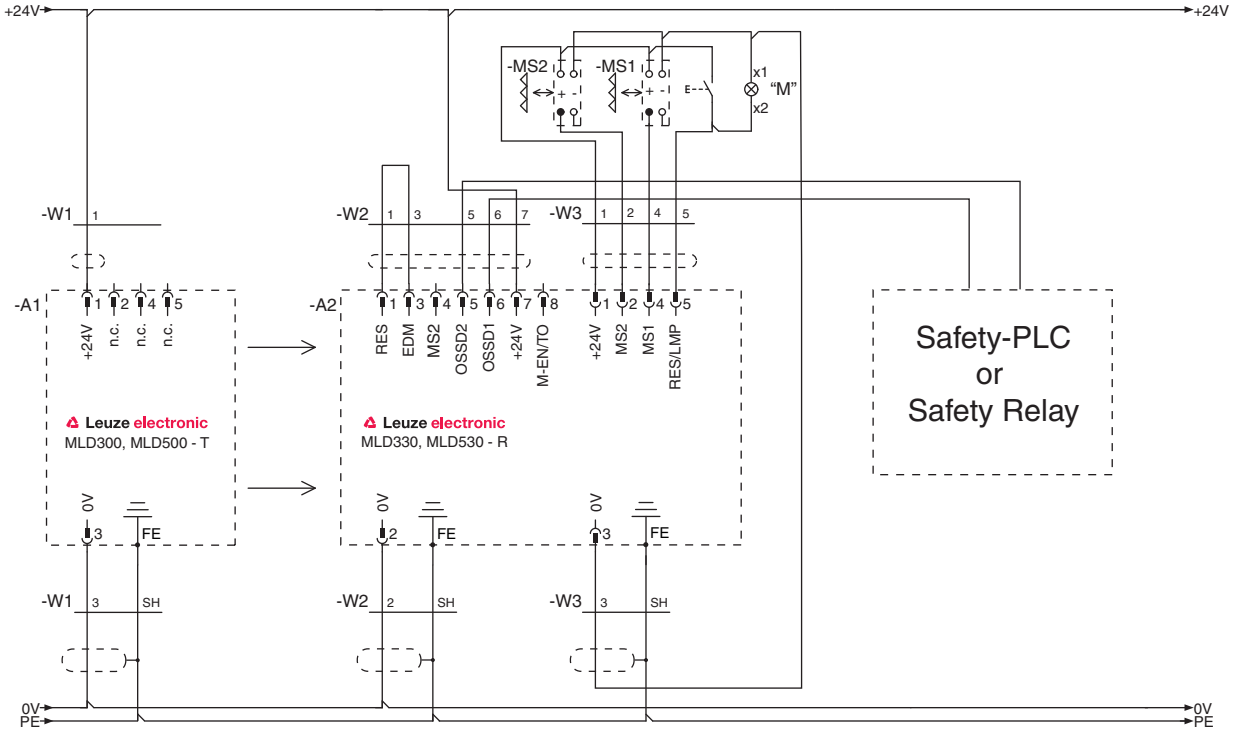

Figure 7.17: Connection example MLD 330, MLD 530 (transmitter-receiver system): partial muting (transceiver connected in an analogous manner)

8 Starting up the device

WARNING!	
	Improper use of the safety sensor may result in serious injury! ↳ Make certain that the entire device and the integration of the optoelectronic protective device was inspected by competent and instructed persons (see chapter 2.2). ↳ Make certain that a dangerous process can only be started while the safety sensor is switched on.

Prerequisites:

- Safety sensor has been mounted and connected according to the instructions
- Operators have been trained in the correct use
- Dangerous process is switched off, the outputs of the safety sensor are disconnected, and the system is protected against being switched back on

↳ After start-up, check the function of the safety sensor (see chapter 9).

8.1 Switching on

Requirements for the supply voltage (power supply unit):

- Reliable mains separation ensured
- Current reserve of at least 2 A available
- Start/restart interlock function connected and activated

NOTE	
	Make certain that the system cannot start up on its own.

↳ Switch on the voltage supply on the safety sensor.

The safety sensor performs a brief self test.

↳ Check whether the green LED illuminates continuously.

The safety sensor is ready for use.

8.2 AS-i connection start-up

8.2.1 Initial commissioning

Proceed as described in chapter 8.1.

If the AS-i safety sensor is correctly integrated in the cyclical data exchange of the AS-Interface, the LED2 illuminates green.

AS-i safety sensor addressing occurs via the M12 connector with conventional AS-i address programming devices.

NOTE	
	In one AS-i network, every possible bus address (1...31) may only be used once. The transmitter does not receive a bus address.

The AS-i safety sensor is configured with asimon configuration and diagnostics software.

NOTE	
	The asimon user's guide can be downloaded from the Internet at www.leuze.com/asi.

NOTE	
	Avoid errors when integrating the system! ↳ Make sure that the safety sensor OSSDs are in the ON state. ↳ Do not interrupt code table teach-in by interfering with the safety sensor protective field.

8.2.2 Exchange of AS-i slaves

When exchanging an AS-i safety sensor, you do not have to perform a new configuration.

NOTE
When exchanging an AS-i safety sensor, pay attention to the connecting and operating instructions of the AS-i safety monitor. The connecting and operating instructions for the Leuze AS-i safety monitor ASM can be downloaded from the Internet at www.leuze.com/asi.

↳ Disconnect the defective AS-i slave from the AS-i cable

The AS-i safety monitor stops the system.

↳ Press the SERVICE button on the AS-i safety monitor

NOTE
With the first press of the SERVICE button, it is determined whether exactly one AS-i slave is missing. This is noted in the AS-i safety monitor error storage. The AS-i safety monitor switches into configuration operation

↳ Install the new AS-i slave

NOTE
AS-i slaves have bus address “0” in their delivery default state. When exchanging, the AS-i master automatically programs the replacement slave with the previous bus address of the defective slave. Readdressing is therefore not necessary. The LED2 of the AS-i safety sensor must illuminate green.

↳ Check the supply voltage of the sensor via the AS-Interface.

LED1 illuminates red.

↳ Check the protective field function on the receiver or transceiver:

For a free protective field, LED1 switches from red to green.

NOTE
Avoid errors when integrating the system! ↳ Make sure that the safety sensor OSSDs are in the ON state. ↳ Do not interrupt code table teach-in by interfering with the safety sensor protective field.

↳ Press the SERVICE button on the AS-i safety monitor

NOTE
With the second press of the SERVICE button, the code sequence of the new AS-i slave is taught in and checked for correctness. If this is okay, the AS-i Safety Monitor switches back into protective mode.

↳ Actuate the start signal to restart the AS-i system

System restart occurs corresponding to the configuration with the restart interlock or with an automatic restart in the AS-i safety monitor.

↳ After exchanging a defective safe AS-i slaves, check the function of the new AS-i slave for correctness (see chapter 9.1).

8.3 Aligning the safety sensor

NOTE
Faulty or incorrect alignment may result in an operating fault. ↳ The alignment performed during start-up should only be performed by qualified personnel. ↳ Observe the data sheets and mounting instructions of the individual components.

Prealignment

↳ Fasten the transmitter and receiver or transceiver and deflecting mirror at the same height so that the front screens face one another.

NOTE
Make certain that both connections point downward. With transceiver systems: make certain that the name plate on transceiver and mirror are located on the same side.

8.4 Aligning without integrated laser alignment aid

Transmitter and receiver or transceiver and deflecting mirror must be aligned with one another. Only then is the safety sensor ready. Alignment can be performed with a clear protective field by observing the LEDs.

NOTE
When using deflecting mirror columns for multi-sided access guarding, we recommend using transmitter-receiver systems with integrated alignment aid (see chapter 8.5) or a laser alignment aid as an accessory (see chapter Accessories) for simplifying the alignment process.

Prerequisites:

- Mounting and prealignment have been performed, i.e. transmitter and receiver or transceiver and deflecting mirror are in a vertical position and the front screens of the devices are facing one another.
- The safety sensor is electrically connected.
- The LEDs on the light axes of the transmitter illuminate green, the LEDs and, if applicable, the 7-segment display on the receiver are also active.

↳ If the red LED on the receiver illuminates or for optimum adjustment (green LED is illuminated), loosen the screws on the mounting brackets or on the device columns.

NOTE
Loosen the screws only enough so that the devices or columns can just be turned.

↳ Turn the receiver to the left until LED1 still flashes green but does not yet illuminate red. You may also need to carefully turn the transmitter in this direction.

↳ Note the value of the twist angle.

↳ Turn the receiver to the right until LED1 still flashes green but does not yet illuminate red. You may also need to carefully turn the transmitter in this direction.

↳ Note the value of the twist angle.

↳ Set the optimum position of the receiver. This lies in the middle of the two values for the twist angle to the left and right.

8.5 Aligning with integrated laser alignment aid

(MLD 300-xxL, MLD 500-xxL)

To simplify the alignment of the safety sensor during start-up, the transmitters of the series mentioned above are optionally equipped with an integrated laser alignment aid. You can use this to precisely and quickly align the transmitter and receiver and, for multi-sided access guarding, the deflecting mirror columns and their individual mirrors.

NOTE
Note that, for technical reasons, the individual laser beams are not 100% parallel. This does not have a negative impact on the alignment process, since the deviation of the laser beams from parallelity is much smaller than the conical beam expansion of the effective safety-related infrared beams emitted by the transmitter.

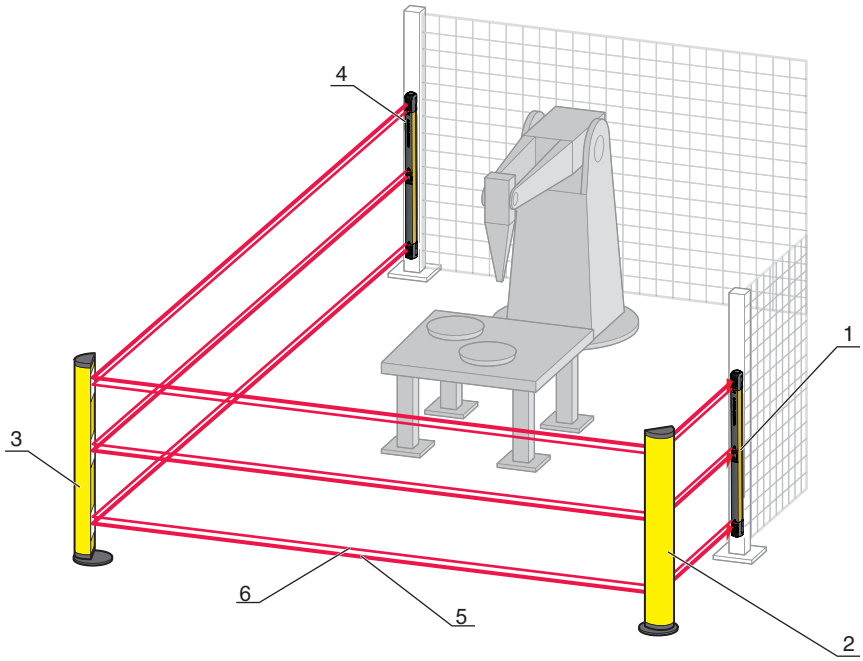

1 Transmitter
2 Device column 1
3 Device column 2
4 Receiver
5 Infrared beam
6 Laser beam

Figure 8.1: Setting up multi-sided access guarding using the integrated laser alignment aid. The transmitter is best mounted in a position that features the shortest distance to the deflecting mirror column.

8.5.1 Required devices and tools

Before you start to align the components, make certain that the required devices and tools are at hand:

- Alignment templates, mounting devices and MagnetKey
- Socket wrench WAF10, Allen key WAF5, hexagon wrench WAF10 for aligning transmitter and receiver in the UDC device column
- Allen key WAF6 for aligning the UDC device columns and the UMC deflecting mirror columns by turning the fastening screws of the alignment base
- Allen key WAF4 for aligning the UMC deflecting mirror column by adjusting the position of the individual mirrors

After you have laid out all necessary devices and tools, you can start the alignment process.

8.5.2 Aligning without UDC device columns and without UMC deflecting mirror columns

Prerequisites:

- Transmitter and receiver are fastened without device columns with mounting brackets (sliding blocks or swivel mounts).
- The receiver's switching outputs to the machine have been disconnected and the system is safeguarded against being switched back on.

↳ Loosen the fastening screws of the mounting brackets for the transmitter and receiver.

↳ Switch on the transmitter and receiver.

⚠ CAUTION!	
⚠	**Danger! Class 2 laser beams!** ↳ Never look directly into the laser beam. This can cause damage to the eye.

↳ Activate the laser beam(s) by briefly placing the MagnetKey on the MagnetKey sensor in the transmitter or with the corresponding switch-on signal via pin 2 (see chapter 3.4).

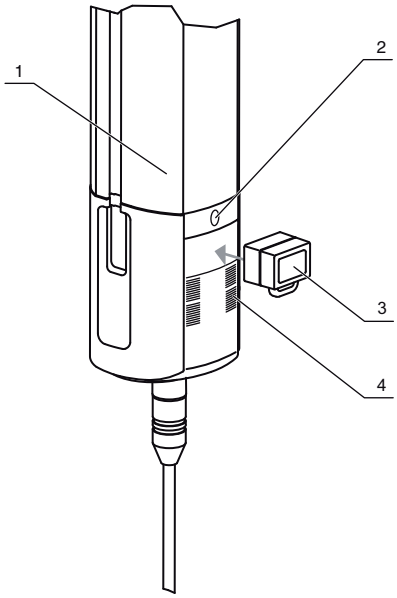

1 Transmitter
2 Laser aperture
3 MagnetKey
4 Beam marking

Figure 8.2: MagnetKey activation position at first light axis of the transmitter

NOTE	
	The laser remains switched on for approx. 10 min.; then it switches off automatically. It can be reactivated at any time

↳ Change the height and orientation of the transmitter by moving and, if necessary, turning until at least one laser spot is incident on the reflective element for the laser alignment aid in the receiver, causing it to illuminate brightly (see figure 8.2). During this process, turn the receiver as well if necessary.

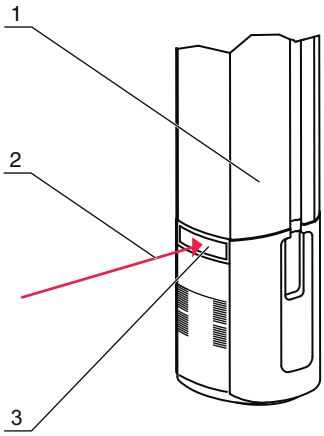

1 Receiver
2 Laser beam of the transmitter
3 Reflective element for laser alignment aid

Figure 8.3: Using the integrated laser alignment aid: laser beam of the transmitter is incident on the reflective element on the receiver and makes it visible from afar

NOTE	
	If a turning movement is necessary for aligning, you should use a swivel mount instead of the sliding block and other devices (see chapter 6.3.2).

When the reflective element for the laser alignment aid is lit up by the incident laser beam, the optimum position of the transmitter relative to the receiver has been set.

↳ Turn the receiver to the left and right until LED1 still flashes green but does not yet illuminate red. Note the respective values for the angle. The optimum position of the receiver lies midway between the two

values (see chapter 8.4).

↳ Tighten the loosened fastening screws on the transmitter and receiver and check the vertical alignment of the devices (see chapter Mounting).

8.5.3 Aligning with UDC device columns and with UMC deflecting mirror columns

Alignment templates assist in aligning the deflecting mirror columns.

Aligning UDC device column and first UMC deflecting mirror columns

Prerequisites

- Transmitter and receiver are fastened in the UDC device columns.
- Transmitter, receiver and UMC deflecting mirror columns were correctly mounted in a vertical position.
- The receiver's switching outputs to the machine are switched off and protected against being switched back on.
- The distance from the transmitter to the first deflecting mirror column is less than approx. 18 m.

	NOTE
	If the distance from the transmitter to the first deflecting mirror column is greater than approx. 18 m: after the first laser beam is incident on the target mark on the alignment template, further alignment must be performed using other means, e.g. with a level.

↳ Loosen the three fastening screws on the alignment base of the transmitter's UDC device column.

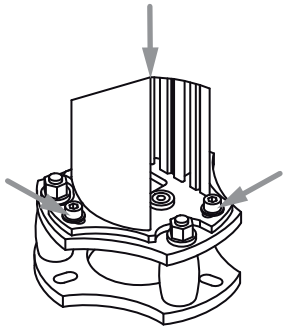

↳ Place the alignment template for the upper mirror on the upper individual mirror of the first UMC deflecting mirror column.

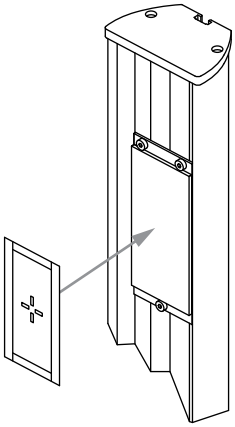

↳ Place the alignment templates for the lower (and middle) mirror on the lower (and middle) individual mirrors of the first UMC deflecting mirror column.

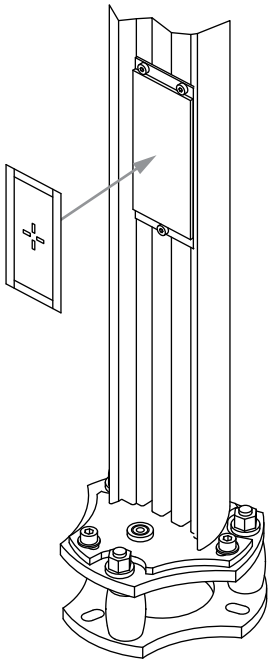

NOTE
The templates must always lie flat on the mirror.

↳ Switch on the transmitter and receiver.

⚠ CAUTION!
Danger! Class 2 laser beams! ↳ Never look directly into the laser beam. This can cause damage to the eye.

↳ Activate the laser beam(s) by briefly placing the MagnetKey on the MagnetKey sensor in the transmitter or with the corresponding switch-on signal (see chapter 3.4).

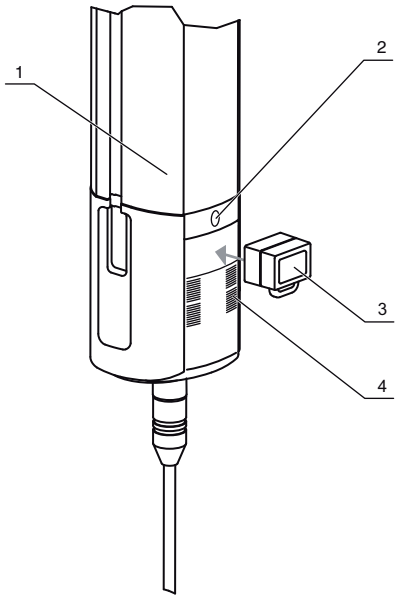

1 Transmitter
2 Laser aperture
3 MagnetKey
4 Beam marking

Figure 8.4: MagnetKey activation position at first light axis of the transmitter

NOTE
The laser remains switched on for approx. 10 min.; then it switches off automatically. It can be reactivated at any time

↳ Carefully turn the UDC device column until one of the laser beams is centrally incident in the middle of the target mark of the corresponding alignment template. For the further alignment, it is sufficient if the remaining laser beams are decentrally incident on the respective alignment templates.

NOTE
If necessary, also change the height by carefully moving the vertically mounted transmitter.

↳ Tighten the loosened fastening screws on the alignment base of the UDC device column and check the vertical alignment of the UDC device column. If necessary, you must readjust the UDC device column.

Aligning the first and second UMC deflecting mirror columns

↳ Place the alignment template for the upper mirror on the upper individual mirror of the second UMC deflecting mirror column.

↳ Place the alignment templates for the lower (and middle) mirror on the lower (and middle) individual mirrors of the second UMC deflecting mirror column.

NOTE
The templates must always lie flat on the mirror.

↳ Loosen the fastening screws of the alignment base on the first UMC deflecting mirror column.

↳ Carefully turn the first UMC deflecting mirror column until the upper laser beam is incident on the target mark of the alignment template on the upper individual mirror of the second UMC deflecting mirror column.

↳ Tighten the fastening screws on the alignment base of the first UMC deflecting mirror column and check the vertical alignment of the UMC deflecting mirror column. If necessary, you must readjust the UMC deflecting mirror column.

↳ Align the upper individual mirror of the first UMC deflecting mirror column by adjusting the corresponding mirror alignment screws so that the laser beam is incident on the target mark of the alignment template on the upper individual mirror of the second UMC deflecting mirror column.

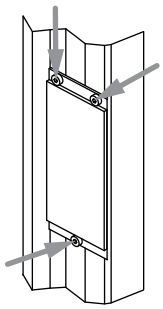

↳ Align the lower individual mirror of the first UMC deflecting mirror column by adjusting the corresponding mirror alignment screws so that the laser beam is incident on the target mark of the alignment template on the lower individual mirror of the second UMC deflecting mirror column.

↳ Perform a visual inspection:

- All three mirror alignment screws on each mirror must be flush with the metal mirror plates.
- Springs must not be pushed down to the limit stop.

↳ Using your hand, briefly press down on the individual mirrors. Then release.

The devices must still be aligned.

Aligning other UMC deflecting mirror columns

↳ Align the other UMC deflecting mirror columns using the same method as described in “Aligning the first and second UMC deflecting mirror columns”.

↳ Afterwards, remove the alignment templates and store them in a safe place.

Aligning the last UMC deflecting mirror column and receiver device in the UDC device column

↳ Loosen the fastening screws of the alignment base on the last UMC deflecting mirror column.

↳ Loosen the three fastening screws on the alignment base of the receiver's UDC device column.

↳ Carefully turn the last UMC deflecting mirror column and, if necessary, the UDC device column of the receiver until the top laser beam is incident on the corresponding reflective element for the laser alignment aid in the receiver, causing it to illuminate brightly (see figure 8.2).

↳ If necessary, align the upper individual mirror of the last UMC deflecting mirror column by adjusting the corresponding mirror alignment screws so that the laser beam is incident on the corresponding reflective element for the laser alignment aid in the receiver, causing it to illuminate brightly (see figure 8.2).

↳ If necessary, align the lower individual mirror of the last UMC deflecting mirror column by adjusting the corresponding mirror alignment screws so that the laser beam is incident on the corresponding reflective element for the laser alignment aid in the receiver, causing it to illuminate brightly (see figure 8.2).

When the reflective element for the laser alignment aid is lit up by the incident laser beam, the optimum position of the transmitter relative to the receiver has been set.

↳ Afterwards, perform a visual inspection of the individual mirrors of the deflecting mirror columns:

- All three mirror alignment screws on each mirror must be flush with the metal mirror plates.
- Springs must not be pushed down to the limit stop.

↳ Using your hand, briefly press down on the individual mirrors, then release. The devices must still be aligned.

↳ Turn the receiver to the left and right until LED1 still flashes green but does not yet illuminate red. Note the respective values for the angle. The optimum position of the receiver lies midway between the two values.

↳ Tighten the fastening screws on the alignment base of both the last UMC deflecting mirror column as well as the UDC device column of the receiver and check the vertical alignment of both the UMC deflecting mirror and the UDC device column of the receiver. If necessary, you must readjust the columns.

8.6 Start/restart button

The start/restart button can be used to unlock the start/restart interlock or to trigger a muting restart. In this way, the responsible person can restore normal operation of the system following process interruptions (triggering of the protective function, failure of the voltage supply, muting fault) (see chapter 8.6.1 and see chapter 8.6.2).

8.6.1 Unlocking start/restart interlock

(MLD 320, MLD 330, MLD 335, MLD 520, MLD 530, MLS 535)

	⚠ WARNING!
⚠	**Premature unlocking of the start/restart interlock may result in serious injury!** If the start/restart interlock is unlocked, the system can start up automatically. ↳ Before unlocking the start/restart interlock, make certain that no people are in the danger zone.

The red and yellow LEDs illuminate as long as the restart is disabled.

↳ Make certain that the active protective field is clear.

The yellow LED only illuminates if the protective field is clear.

↳ If the active protective field is not clear, select a different procedure (see chapter 8.6.2).

↳ Make certain that there are no people in the danger zone.

↳ Press the start/restart button and release it again (after 0.15 … 4 s).

The receiver/transceiver switches back to the ON state.

8.6.2 Muting restart

(MLD 330, MLD 335, MLD 530, MLD 535)

If the muting indicator indicates an error by flashing (e.g. for muting timeout, failure of the supply voltage), the muting function can be manually triggered, and the system can be started even with the light axes of the safety sensor interrupted. In this way, the Muting path can be overridden.

	⚠ WARNING!
⚠	**Premature muting restart may result in serious injury!** ↳ Make certain that the danger zone can be viewed from the start/restart button and that the entire process can be observed by the responsible person. ↳ Before and during the muting restart, ensure that there are no people in the danger zone.

↳ Make certain that there are no people in the danger zone.

↳ Operate the start/restart button within the specified time as follows:

press, release, press again.

The muting function remains active after the button is pressed for the second time as long as the start/restart button is held down. This means that the OSSDs are enabled for a maximum of 2 minutes (for sequence controlled 2-sensor muting for up to 5 s), even if no valid muting condition exists.

↳ Repeat the operation if necessary.

	NOTE
i	If a valid muting condition is detected after the button is pressed for the second time, the start/restart button can be released immediately, e.g., after a conveying belt standstill due to a temporary voltage interruption, muting timeout or similar.

↳ Again release the start/restart button.

The muting indicator illuminates continuously and the system returns to normal operation. Otherwise, the OSSDs are switched off again.

	NOTE
i	A start/restart can also occur via the PLC signal (output impedance < 1.6 kΩ, PNP switching).

9 Testing

WARNING!	
	A running machine may result in serious injury! ↳ Make certain that, during all conversions, maintenance work and inspections, the system is securely shut down and protected against being restarted.

The safety sensors must be exchanged after a maximum of 20 years.

↳ Always exchange entire safety sensors.

↳ For the tests, observe nationally applicable regulations.

↳ Document all tests in a comprehensible manner.

9.1 Before the initial start-up and following modifications

WARNING!	
	Unpredictable machine behavior during initial start-up may result in serious injury! ↳ Make certain that there are no people in the danger zone.

Acc. to IEC 62046 and national regulations (e.g. EU directive 89/655 EEC), tests are to be performed by competent persons (see chapter 2.2) in the following situations:

- Prior to the initial start-up
- Following modifications to the machine
- After longer machine downtime
- Following retrofitting or reconfiguration of the safety sensor

↳ Test the effectiveness of the shut-down function in all operating modes of the machine acc. to the following checklist.

↳ Document all tests in a comprehensible manner and include the configuration of the safety sensor along with the data for the safety- and minimum distances in the documentation.

↳ Before they begin work, train the operators on their respective tasks. The training is the responsibility of the operating company.

↳ Attach notes regarding daily testing in the respective national language of the operator on the machine in a highly visible location, e.g. by printing out the corresponding chapter (see chapter 9.3).

↳ Check whether the safety sensor was correctly selected acc. to the locally applicable regulations and directives.

↳ Check whether the safety sensor is operated acc. to the specified environmental conditions (see chapter 14).

↳ Make certain that the safety sensor is protected against overcurrent.

↳ Perform a visual inspection for damage and test the electrical function (see chapter 9.2).

Minimum requirements for the power supply unit:

- Safe mains separation
- At least 2 A current reserve
- Power-failure bridging for at least 20 ms

Not until proper function of the optoelectronic protective device is ascertained may it be integrated in the control circuit of the system.

NOTE	
	As a safety inspection, Leuze offers testing by a competent person prior to the commissioning (see chapter 13).

Checklists

The following checklists serve as a reference for the machine manufacturer or supplier. They replace neither testing of the complete machine or system prior to initial commissioning nor their periodic testing by a qualified person (see chapter 2.2). The checklists contain minimum testing requirements. Depending on the application, other tests may be necessary.

↳ Store the checklists with the machine documents.

9.1.1 Checklist – before the initial start-up

Tester: Persons with the necessary competence (see chapter 2.2)

Table 9.1: Checklist – before the initial start-up

Check:	Yes	No
Were all safety directives and standards relevant to this machine type observed?		
Does the declaration of conformity of the machine include a listing of these documents?		
Does the safety sensor satisfy the safety-related capability (PL, SIL, category) as required by the risk assessment?		
Circuit diagram: Are both safety-related switching outputs (OSSDs) integrated in the downstream machine control acc. to the required safety category?		
Circuit diagram: Are the switching elements (e.g. contactors) with positive-guided contacts that are controlled by the safety sensor monitored by an external device monitoring circuit (EDM)?		
Does the electrical wiring match the circuit diagrams?		
Have the required protective measures against electrical shock been effectively implemented?		
Has the maximum stopping time of the machine been remeasured and recorded in the machine documents?		
Is the required safety distance (protective field of the safety sensor to the next point of operation) maintained?		
Are all hazardous locations of the machine accessible only through the protective field of the safety sensor? Are all additional protective devices (e.g. safety guards) correctly mounted and protected against tampering?		
Is the command device for triggering the start/restart interlock of the safety sensor or the machine mounted in accordance with specifications?		
Is the safety sensor correctly aligned and are all fastening screws and plugs secure?		
Are safety sensor, connecting cable, plug, protection caps and command devices undamaged and without any sign of tampering?		
Has the effectiveness of the protective function been checked for all operating modes of the machine by means of a function test?		
Is the start/restart button for resetting the AOPD mounted outside of the danger zone in accordance with specifications in such a way that it cannot be reached from within the danger zone? Can the entire danger zone be seen from the place at which the start/restart button is installed?		
Does the interruption of any given beam cause the dangerous movement to stop?		
When the AOPD is separated from its supply voltage, does the dangerous movement stop, and, after the supply voltage has been restored, is it necessary to actuate the start/restart button to reset the machine?		

Check:	Yes	No
Is the safety sensor effective during the entire dangerous movement of the machine?		
Are the notices for daily testing of the safety sensor legible to the operator and are they located in a highly visible location?		
Is the muting indicator visibly mounted on the entry/exit path?		

9.2 To be performed periodically by competent persons

The reliable interaction of safety sensor and machine must be periodically tested in order to detect changes to the machine or impermissible tampering with the safety sensor. Testing intervals are determined by nationally applicable regulations (recommendation acc. to IEC 62046: 12 months).

- Only allow testing to be performed by qualified persons (see chapter 2.2).
- Observe the nationally applicable regulations and the time periods specified therein.

NOTE

As a safety inspection, Leuze offers periodic testing by a competent person (see chapter 13).

9.3 Periodically by the operator

The function of the safety sensor must be checked (usually but not necessarily by the operator) periodically depending on the given risk according to the following checklist so that damage or prohibited tampering can be detected.

Depending on the risk assessment, the test cycle must be defined by the integrator or operating company (e.g., daily, on shift changes, ...) or is specified by national regulations or regulations of the employer's liability insurance association and may be dependent on the machine type.

Due to complex machines and processes, it may be necessary under certain circumstances to check some points at longer time intervals. Observe the classification in “Test at least” and “Test when possible”.

⚠ WARNING!

Unpredictable machine behavior during the test may result in serious injury!

- Make certain that there are no people in the danger zone.

⚠ WARNING!

Severe injuries can result if the machine is operated further when faults occur during periodic testing!

If you answer one of the items on the checklist (see table 9.2) with *no*, the machine must no longer be operated.

- Only allow the machine to be tested by persons with the necessary competence (see chapter 2.2, see chapter 9.1).

- Stop the dangerous state.
- Check transmitter, receiver and, if applicable, deflecting mirrors for damage or tampering.
- Interrupt the light beam from a position outside the danger zone and ensure that the machine cannot be started with an interrupted light beam.
- Start the machine.
- Ensure that the dangerous state is stopped as soon as a light beam is interrupted.

9.3.1 Checklist – periodically by the operator

Table 9.2: Checklist – regular function test by trained operators/persons

Test at least:	Yes	No
Is the safety sensor aligned correctly? Are all fastening screws tightened and all connectors secured?		
Are safety sensor, connecting cable, plug and command devices undamaged and without any sign of tampering?		
Are all point of operations at the machine accessible only through one or more protective fields of safety sensors?		
Are all additional protective devices mounted correctly (e.g., safety guard)?		

When possible, test during running operation:	Yes	No
Does the start/restart interlock prevent the automatic start-up of the machine after the safety sensor has been switched on or activated?		
↳ Interrupt a light axis of the safety sensor with a test object during operation. Is the dangerous movement shut down immediately?		

9.4 Annual testing of safe switch-off of the AS-i connection

Competent persons (see chapter 2.2) must check the proper function of the safe AS-i system annually, meaning the safe switch off of the AS-i safety monitor by triggering an assigned AS-i safety sensor.

↳ Trigger the AS-i safety sensor function.

Table 9.3: Checklist – annual

Check:	Yes	No
Does the AS-i safety sensor correctly switch off the dangerous movement after forced triggering?		

10 Maintenance

	NOTE
	Faulty operation if transmitter and receiver are soiled! The surfaces of the front screen of transmitters, receivers and, where applicable, deflecting mirror must not be scratched or roughened at the positions where beams enter and exit. Do not use chemical cleaners.

Prerequisites for cleaning:

- The system is safely shut down and protected against restart.

↳ Clean the front screen with a clean, antistatic cloth.

↳ After cleaning, check the position of transmitter and receiver.

↳ Clean the safety sensor regularly depending on the degree of contamination.

11 Troubleshooting

11.1 What to do in case of failure?

After switching the safety sensor on, the display elements (see chapter 3.3) assist in checking the correct functionality and in faultfinding.

In case of failure, you can determine the fault from the LED displays or read a message from the 7-segment display. With the error message you can determine the cause of the error and initiate measures to rectify it.

NOTE	
	If the safety sensor responds with an error display, it may be defective. ↳ Switch off the machine and leave it switched off. ↳ Analyze and eliminate the cause of the fault using the following table. ↳ If you are unable to rectify the fault, contact the Leuze branch responsible for you or call the Leuze customer service (see chapter 13).

11.2 Operating indicators of the LEDs

LED	State	Cause	Measure
LED at the transmitter, per light axis	Off	Transmitter beam inactive or no supply voltage	Check the power supply unit and the electrical connection. Exchange the power supply unit, if applicable.
LED1 on the receiver	Red, flashing slowly (approx. 1 Hz)	External error	Check the connection of the cables. For test purposes, disconnect the connection of the OSSD outputs immediately after the original connection cable. For MLDx20-xx: test the device in automatic restart mode and without EDM contactor monitoring by establishing a connection from connection cable white to yellow and connecting 24 V to the green wire.
LED1 on the receiver	Red, flashing fast (approx. 10 Hz)	Internal error	In the event of an unsuccessful restart, contact customer service.
LED1 on the receiver	Green, flashing slowly (approx. 1 Hz)	Weak signal due to soiling and misalignment	Clean the front screen and check the alignment of transmitter and receiver (see chapter 8.3). Compare the required operating range for the application with the operating range of the device. On the transmitter device, check whether or not pin 2 is connected to 24 V (max. operating range).

LED	State	Cause	Measure
LED2 on the receiver	Yellow	Start/restart interlock locked	If there are no people in the danger zone: operate the restart button.
LED2 on the receiver (with MLD 500/AS-i)	Off	No voltage on AS-i cable	Connect the AS-i power supply unit and test the connection of the AS-i safety sensor with the AS-i cable.
LED2 on the receiver (with MLD 500/AS-i)	Red	AS-i slave not communicating with AS-i master	Check the connection of the AS-i master with the AS-i slave or correct the AS-i address of the AS-i slave or again correctly set the AS-i profile in the AS-i master.
LED2 on the receiver (with MLD 500/AS-i)	Yellow, flashing	AS-i slave has invalid address 0	Assign the AS-i slave a valid address.
LED2 on the receiver (with MLD 500/AS-i)	Red/green, flashing alternately	AS-i slave device error or AS-i connection defective	Exchange the AS-i safety sensor.
LED2 on the receiver (with MLD 500/AS-i)	Green, flashing red at the same time	Periphery error	Check the periphery for errors and eliminate them
LED2 on the receiver (with MLD 500/AS-i)	Green	AS-i slave communicating with AS-i master	None

11.3 Error messages 7-segment display

(MLD 330, MLD 335, MLD 530, MLD 535)

Error	Cause/description	Measures
F[No. 0-255]	Internal error	In the event of an unsuccessful restart, contact customer service.
E01	Cross-circuit between OSSD1 and OSSD2	Check the wiring between OSSD1 and OSSD2.
E02	Overload on OSSD1	Check the wiring or exchange the connected component (reducing the load).
E03	Overload on OSSD2	Check the wiring or exchange the connected component (reducing the load).
E04	Short-circuit against Vcc at OSSD1	Check the wiring. Exchange the cable, if applicable.
E05	Short-circuit against Vcc at OSSD2	Check the wiring. Exchange the cable, if applicable.
E06	Short circuit against GND at OSSD1	Check the wiring. Exchange the cable, if applicable.
E07	Short circuit against +24 V at OSSD1	Check the wiring. Exchange the cable, if applicable.

Error	Cause/description	Measures
E08	Short circuit against GND at OSSD2	Check the wiring. Exchange the cable, if applicable.
E09	Short circuit against +24 V at OSSD2	Check the wiring. Exchange the cable, if applicable.
E14	Undervoltage at supply	Select a suitable current source
E15	Overvoltage at supply	Select a suitable current source
E19	Foreign transmitter detected	Remove foreign transmitters and increase the distance to the reflective surfaces.
E24	Start button on connector plug connected to 0 V	Check the wiring.
E27	Short-circuit a local interface between start button and MS1 (pin 4 and pin 5)	Check the wiring.
E28	Short-circuit a local interface between start button and MS2 (pin 2 and pin 5)	Check the wiring.
E29	Start button on local interface connected to 0 V	Check the wiring.
E30	Feedback contact of contactor monitoring does not open	Check the functioning of the contactor and the cable connections. Exchange the contactor if necessary.
E31	Feedback contact of contactor monitoring does not close	Check the functioning of the contactor and the cable connections. Exchange the contactor if necessary.
E32	Feedback contact of contactor monitoring is not closed	Check the functioning of the contactor and the cable connections. Exchange the contactor if necessary.
E33	Feedback contact of contactor monitoring is not open	Check the functioning of the contactor and the cable connections. Exchange the contactor if necessary.
E39	Activation time for restart button (or muting restart button) exceeded or cable short-circuited	Press the restart button. If the restart is unsuccessful, check the wiring of the restart button.
E80	Invalid operating mode due to configuration error, e.g. incorrect wiring or start button pressed during startup	Check the circuit diagram and the wiring and restart.
E81	Operating mode 1 changed during operation	Check the correctness of the selected operating mode, change the operating mode if required, and restart.
E82	Operating mode 2 changed during operation	Check the correctness of the selected operating mode, change the operating mode if required, and restart.
E83	Operating mode 3 changed during operation	Check the correctness of the selected operating mode, change the operating mode if required, and restart.
E84	Operating mode 4 changed during operation	Check the correctness of the selected operating mode, change the operating mode if required, and restart.

Error	Cause/description	Measures
E85	Operating mode 5 changed during operation	Check the correctness of the selected operating mode, change the operating mode if required, and restart.
E86	Operating mode 6 changed during operation	Check the correctness of the selected operating mode, change the operating mode if required, and restart.
E88	Operating mode with start/restart interlock changed during operation (for MLD 320 and MLD 520)	Check the correctness of the selected operating mode, change the operating mode if required, and restart.
E89	Operating mode without start/ restart interlock changed during operation (for MLD 320 and MLD 520)	Check the correctness of the selected operating mode, change the operating mode if required, and restart.
U40	Operating mode 3 if MS2 and MS1 are activated	Check the arrangement and the assignment of the muting sensors.
U41	Simultaneity condition during muting not met: second signal outside tolerance of 4 s	Check the arrangement of the muting sensors.
U42	Muting time limit exceeded	Check the muting sequence.
U43	No valid muting condition: Premature muting end before protective field release	Select a valid muting condition.
U51	Only one muting signal active in case of protective field violation, the second muting signal is missing	Check the mounting of the muting sensors and the triggering of the muting signals.
U54	Missing additional muting control signal (muting-enable)	Check the connection of the muting sensor and the triggering of the muting-enable signal. Reconnect the muting sensor, if applicable, and activate it with a restart.
U56	Muting restart canceled	Check the connections of the muting sensors and carry out muting restart again if required.
U57	Partial muting: topmost beam interrupted	Check the object size, e.g., pallet height. Change the operating mode (e.g., standard muting) if required and restart.
U58	Muting-enable signal error	Check whether 0 V is present at the muting-enable input or if signals have been applied for longer than 8h.
U70	Weak signal	Check the alignment of the safety sensor. Check whether the front screens are soiled and clean them if necessary.
8 or .	Error during uploading	Disconnect the device from the voltage supply for 5 s.

11.4 Multicolor indicator

Table 11.1: Meaning of the display of the multicolor indicator on the MLD 320, MLD 520

Display	Meaning	Measures
Green, continuously illuminated	OSSD on	None
Red, continuously illuminated	OSSD off	None
Yellow/red, alternating	Internal restart locked	Actuate the reset button
Red flashing, slowly (1 Hz)	OSSD off, device error/wiring error	Check the wiring.
Red flashing, fast (10 Hz)	OSSD off, internal error	In the event of an unsuccessful restart, contact customer service.
Green flashing, slowly (1 Hz)	OSSD on, weak signal	Check the alignment or clean the beam exit windows.

Table 11.2: Meaning of the display of the multicolor indicator on the MLD 330, MLD 335, MLD 530, MLD 535

Display	Meaning	Measures
Green, continuously illuminated	OSSD on, no muting	None
Red, continuously illuminated	OSSD off, no muting	None
Yellow/red, alternating	Internal restart locked	Actuate the reset button
White, continuously illuminated	OSSD on, valid muting state	None
White, flashing	OSSD on, muting error or no valid muting condition	Check whether the muting timeout has been exceeded or the simultaneity condition (both muting signals within 4 s) has not been met.
Red/white, alternating	OSSD off, muting error or no valid muting condition	Check whether the muting timeout has been exceeded or the simultaneity condition (both muting signals within 4 s) has not been met.
Red flashing, slowly (1 Hz)	OSSD off, device error/wiring error	Check the wiring.
Red flashing, fast (10 Hz)	OSSD off, internal error	In the event of an unsuccessful restart, contact customer service.
Green flashing, slowly (1 Hz)	OSSD on, weak signal	Check the alignment or clean the beam exit windows.

11.5 Error message query via AS-Interface

The P1 parameter which is read out by the AS-i master via the AS-i safety sensor parameter port contains interfering signal information (see chapter 7.1.4).

12 Disposing

↳ For disposal observe the applicable national regulations regarding electronic components.

13 Service and support

24-hour on-call service at:
+49 7021 573-0

Service hotline:
+49 7021 573-123

E-mail:
service.protect@leuze.de

Return address for repairs:
Service center
Leuze electronic GmbH + Co. KG
In der Braike 1
D-73277 Owen / Germany

14 Technical data

14.1 General specifications

Table 14.1: Beam/protective field data

Beams / beam distance [mm]	Recommendation of beam heights in accordance with EN ISO 13855 [mm]	Transmitter/receiver range [m]	Operating range Transceiver [m]
1 / -	-	0.5 to 70 / 20 to 100	-
2 / 500	400, 900	0.5 to 50 / 20 to 70	0.5 to 8
3 / 400	300, 700, 1100	0.5 to 50 / 20 to 70	0.5 to 6 / 8
4 / 300	300, 600, 900, 1200	0.5 to 50 / 20 to 70	-

Table 14.2: Safety-relevant technical data

	MLD 312 (for external testing)	MLD 300	MLD 500
Type in accordance with EN IEC 61496	Type 2	Type 2	Type 4
SIL in accordance with IEC 61508	-	SIL 1	SIL 3
SILCL in accordance with EN IEC 62061	-	SILCL 1	SILCL 3
Performance Level (PL) in accordance with EN ISO 13849-1	Up to PL c [a)]	PL c	PL e
Category in accordance with EN ISO 13849-1	Cat. 2	Cat. 3	Cat. 4
Average probability of a failure to danger per hour (PFH_d)	$1.2x10^{-8}$ 1/h [b)]	$1.2x10^{-8}$ 1/h	$6.6x10^{-9}$ 1/h
Mean time to dangerous failure ($MTTF_d$)	204 years		
Mission time (T_M)	20 years		

a) with a respective safety monitoring device (e.g., Leuze MSI-T), with $DC_{avg} \geq$ medium

b) during an external test with DC > 90 %, e.g., with a MSI-T Leuze safety monitoring device

Table 14.3: General system data

Connection technology	M12 (8-pin / 5-pin) device-dependent
Supply voltage U_v, transmitter and receiver, transceiver	+24 V, ± 20% (SELV)
Current consumption - transmitter	50 mA
Current consumption - receiver/transceiver	150 mA (without load)
Local socket: supply voltage, e.g., for muting sensors, current consumption (max.)	24 V, 450 mA
Common value for ext. fuse in the supply line for transmitter and receiver / transceiver	2 A
Synchronization	Optical between transmitter and receiver

Protection class	III
Degree of protection	IP67[a)]
Ambient temperature, operation	-30 ... 55 °C
Ambient temperature, storage	-40 ... 75 °C
Relative humidity (non-condensing)	0 ... 95%
Vibration resistance	5 g, 10 - 55 Hz acc. to IEC/EN 60068-2-6; amplitude 0.35 mm
Shock resistance	10 g, 16 ms in accordance with IEC/EN 60068-2-6
Profile cross section	52 mm x 65 mm
Dimensions	See dimensional drawings
Weight	see table 14.9

a) The devices permanently satisfy the requirements of degree of protection IP67 provided at least one of the following criteria is met: - The supplied cover enclosures with integrated gaskets are screwed in at the M12 plug threads - Appropriate and ready-made connection cables are connected to the M12 plugs

Table 14.4: System data - transmitter

Light source	LED; exempt group in acc. with EN 62471:2008
Wavelength	850 nm
Pulse duration	21.6 µs
Pulse pause	800 µs
Power	Mean power: 1.369 µW

Table 14.5: Receiver/transceiver, status signals and control signals

Voltage output, only for command devices or safety sensor		
RES	Input: Output:	+24 V +24 V
PM[a)] /EDM	Input:	+24 V: 10 mA
MODE	Input:	Contact or transistor against +24 V: 5 mA (pnp)
M-EN/TO[b)]	Input:	+24 V: 5 mA
MS1, MS2	Input:	+24 V: 5 mA

a) PM ... Partial muting

b) M-EN/TO ... Muting-Enable/-Timeout

Table 14.6: US patents

US patents	US 6,418,546 B US 7,741,595 B

Table 14.7: Receiver/transceiver machine interface, safety-related transistor outputs

OSSD transistor outputs	2 safety-related pnp transistor outputs (short-circuit monitored, cross-circuit monitored)		
	Minimum	Typical	Maximum
Switching voltage high active (U_v - 1V)	18.2 V	23 V	27.8 V
Switching voltage low	0 V	0 V	+2.5 V
Switched current (per output)	2 mA	300 mA	380 mA
Leakage current		<2 µA	200 µA [a)]
Load capacity			0.3 µF
Load inductivity			2.2 H
Permissible wire resistance for load			<200 Ω [b)]
Permissible conductor cross section	0.25 mm^2	0.25 mm^2 / 0.34 mm^2	0.5 mm^2 [c)]
Permissible cable length between receiver and load			100 m
Test pulse width			340 µs
Test pulse distance	(5 ms)	60 ms	
OSSD restart delay time after beam interruption		100 ms	
OSSD response time		25 ms (MLD 310, MLD 312, MLD 510, MLD 320, MLD 520) 50 ms (MLD 330, MLD 335, MLD 530, MLD 535)	

a) In the event of a failure (if the 0 V cable is interrupted), each of the outputs behaves as a 120 kΩ resistor to U_v. A downstream safety PLC must not detect this as a logical “1”.

b) Note the additional restrictions due to cable length and load current.

c) For larger cross sections, directly adjacent wires should not be used for the OSSD signal lines.

NOTE

The safety-related transistor outputs perform the spark extinction. With transistor outputs, it is therefore not necessary to use the spark extinction circuits recommended by contactor/valve manufacturers etc. (RC elements, varistors or recovery diodes). These extend the decay times of inductive switching elements.

Table 14.8: Receiver/transceiver machine interface, ASi-3 Safety at Work

	Transmitter	Receiver/transceiver without muting indicator	Receiver/ transceiver with internal muting indicator	Receiver/ transceiver with external muting indicator
Average probability of a failure to danger per hour (PFH_d)	-	8.6×10^{-9} 1/h		
Response time	-	30 ms		
Slave address range	-	Standard slave (addresses 1...31)		
IO code	-	0	7	
ID code	-	B	B	
ID1 code	-	F	F	
ID2 code	-	F	1	
AS-i profile	-	S-0.B.F	S-7.B.1	
Output DO0	-	-	Muting indicator on/off	Muting indicator on/ off
DO1- DO3	-	-	Not used	Not used
DI[0-3]	-	Code sequence, in accordance with AS-i Safety at Work		
Current consumption from AS-i circuit	50 mA	110 mA	140 mA	110 mA
Parameter P0	-	Restart delay time after beam interruption P0 = 0 → 100 ms P0 = 1 → 500 ms		
P1	-	Error message output P0 = 0 → no interference P0 = 1 → interference, e.g. caused by soiling, or peripheral error		
P2, P3	-	Not used		

14.2 Dimensions, weights

Table 14.9: Weights

Number of beams	Beam spacing	Transmitter	Receiver	Transceiver	Deflecting mirrors
1	-	0.6 kg	0.6 kg	-	-
2	500	1.4 kg	1.4 kg	1.4 kg	1.4 kg
3	400	2.0 kg	2.0 kg	2.0 kg	2.0 kg
4	300	2.2 kg	2.2 kg	-	-

ПРОМЭЛЕКТРОНИКА / sales@prom-elec.com

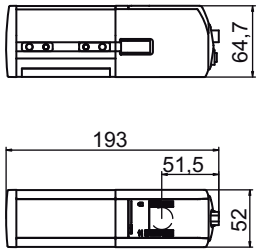

Figure 14.1: Dimensions of MLD, 1-beam transmitter, receiver

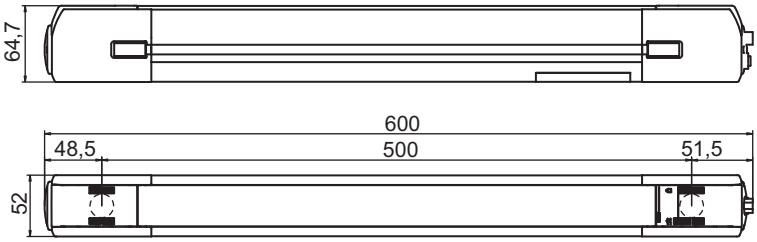

Figure 14.2: Dimensions of MLD, 2-beam transmitter, receiver

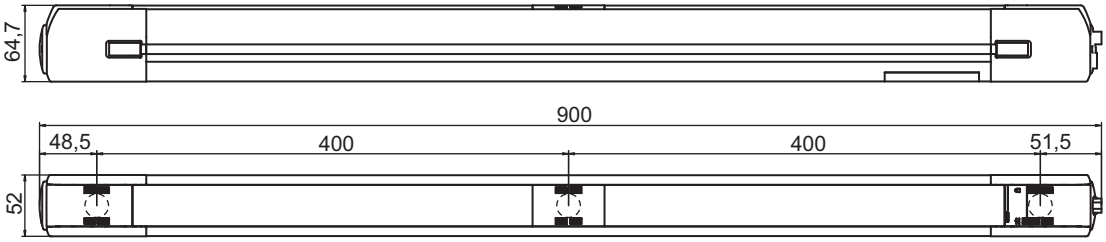

Figure 14.3: Dimensions of MLD, 3-beam transmitter, receiver

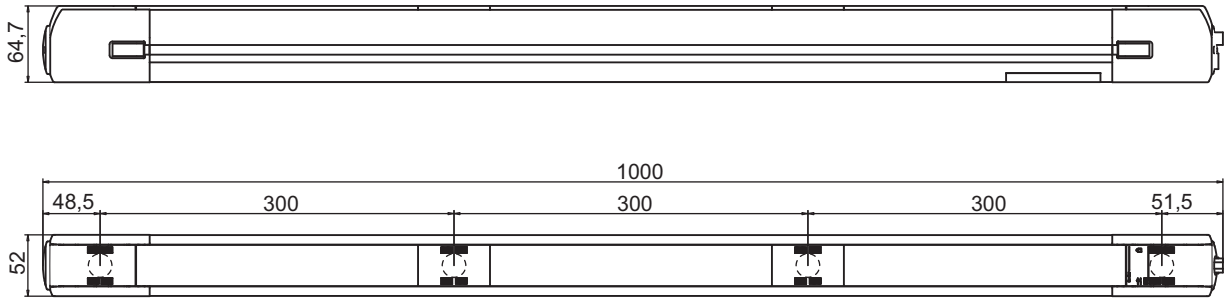

Figure 14.4: Dimensions of MLD, 4-beam transmitter, receiver

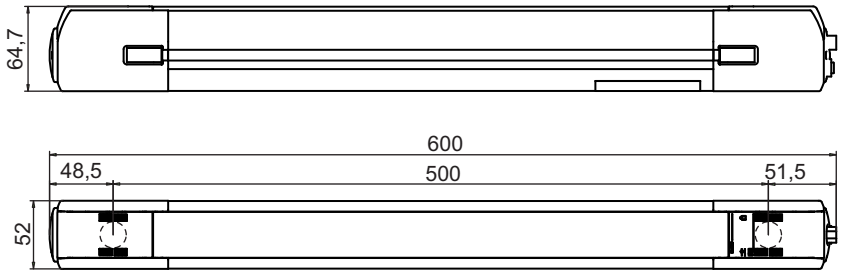

Figure 14.5: Dimensions of MLD, 2-beam transceiver

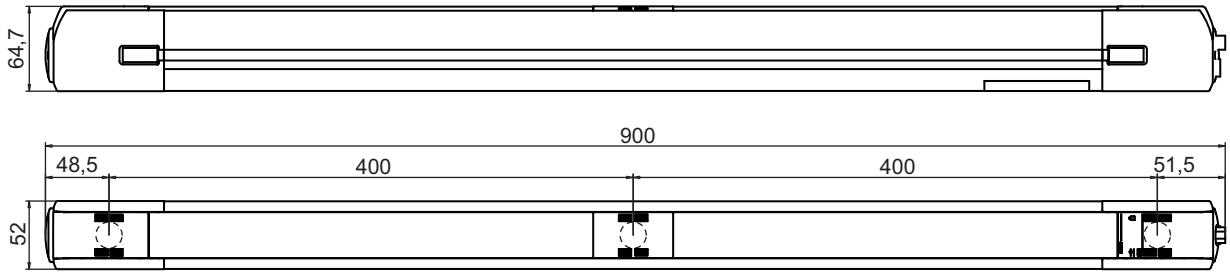

Figure 14.6: Dimensions of MLD, 3-beam transceiver

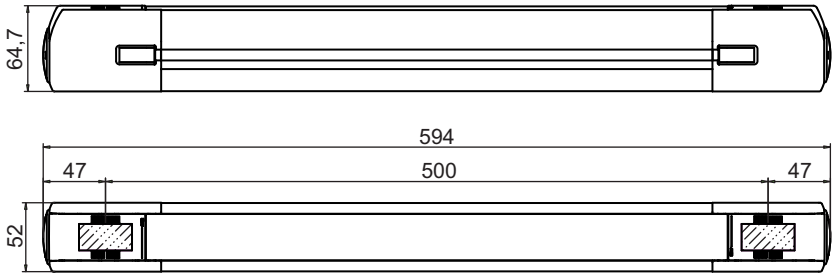

Figure 14.7: Dimensions of MLD-M, 2-beam deflecting mirror

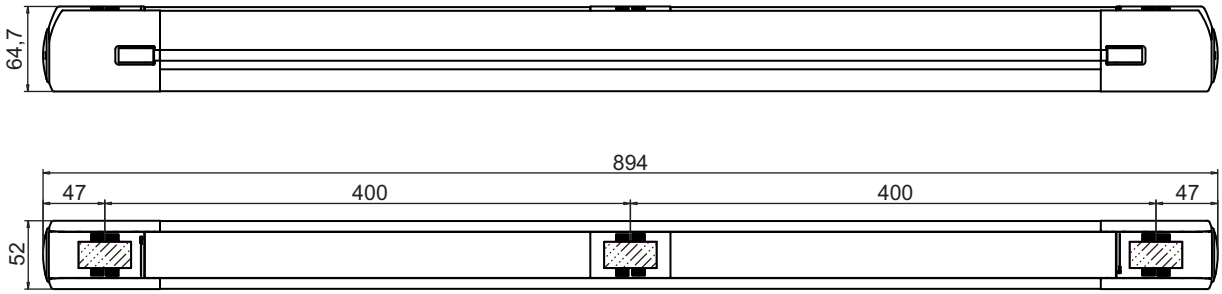

Figure 14.8: Dimensions of MLD-M, 3-beam deflecting mirror

14.3 Dimensioned drawings: Accessories

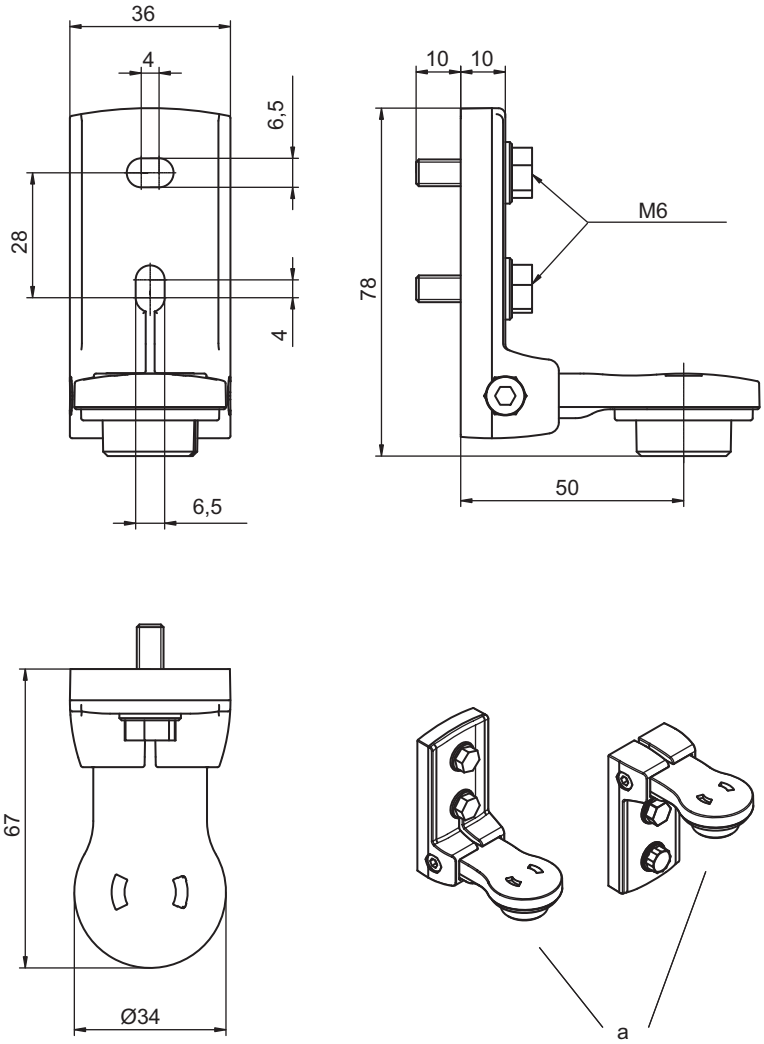

a Mounting variants

Figure 14.9: Swivel mount BT-240B

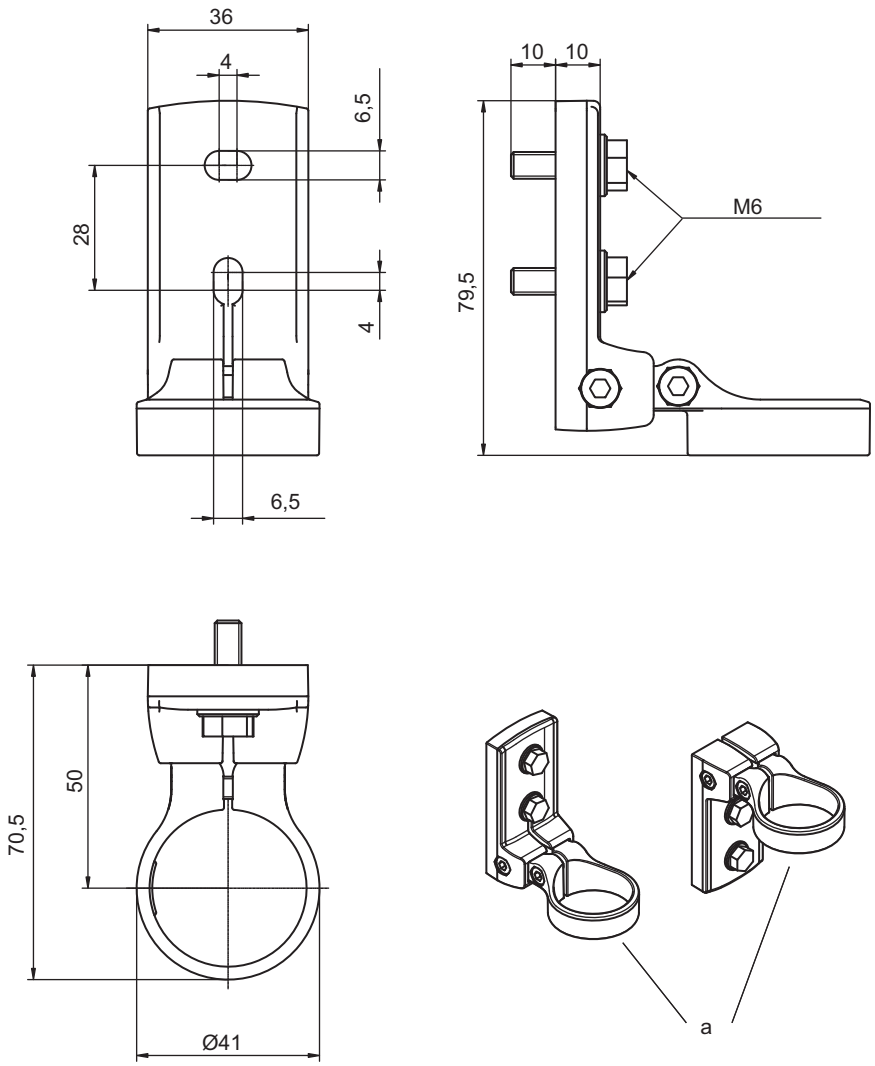

a Mounting variants

Figure 14.10: Swivel mount BT-240C

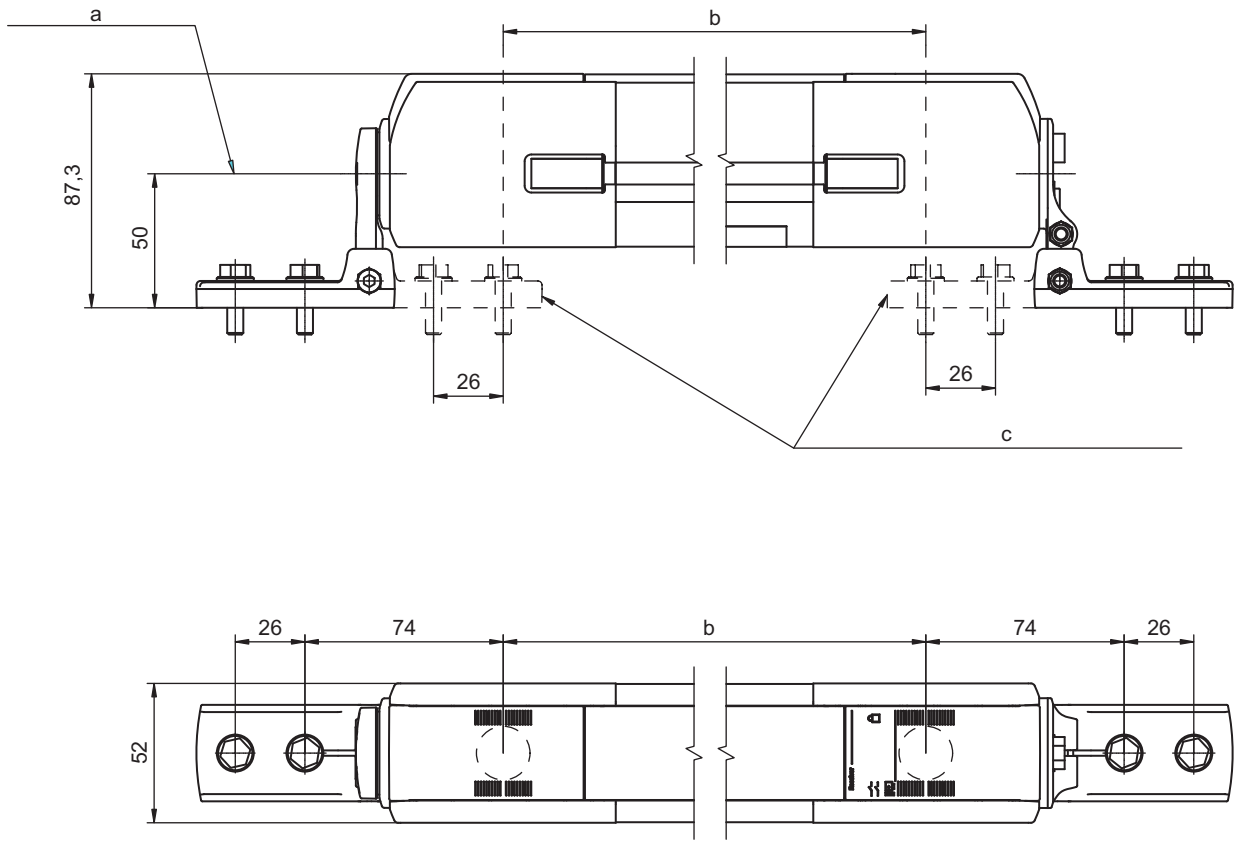

a Swivel axis
b Beam distance
c Alternative mounting variant

Figure 14.11: Mounting dimensions BT-240B, BT-240C

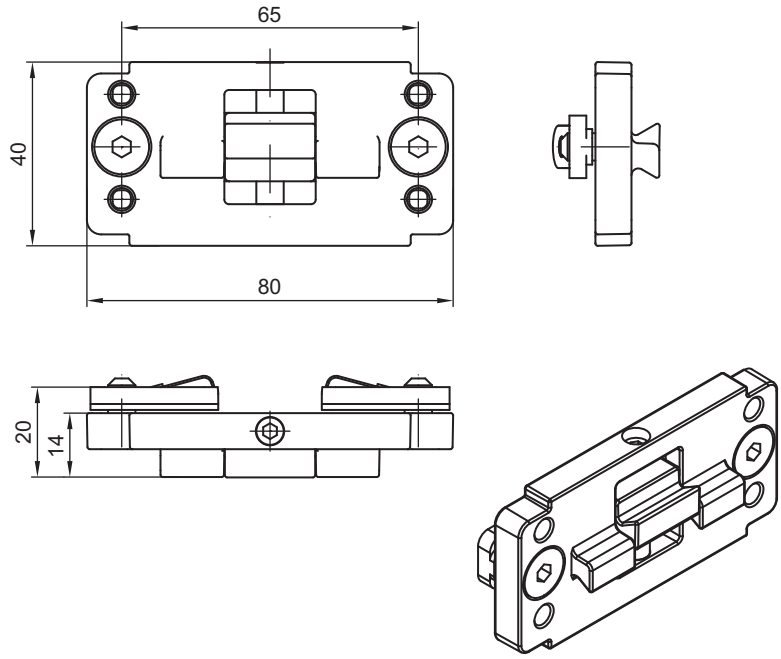

Figure 14.12: BT-P40 clamp bracket

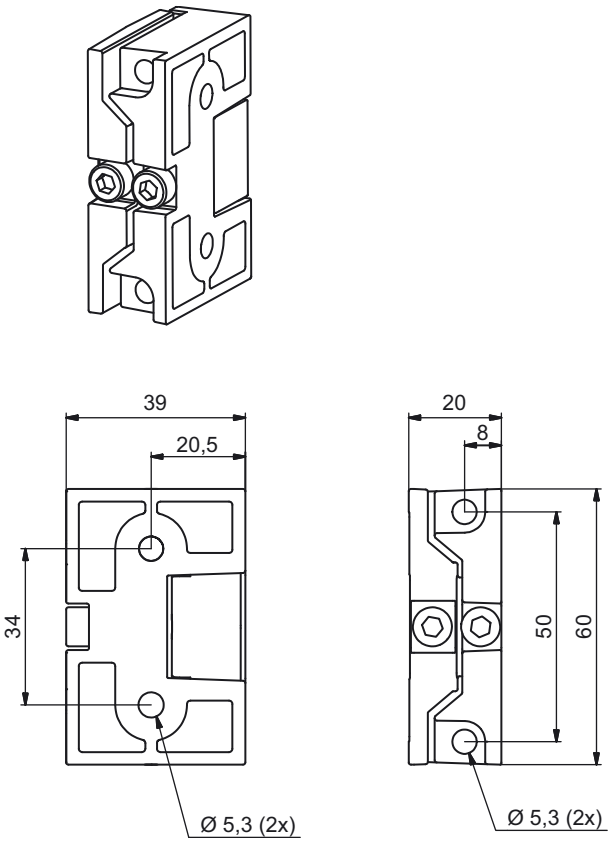

Figure 14.13: BT-2SB10 clamp swiveling mounting bracket

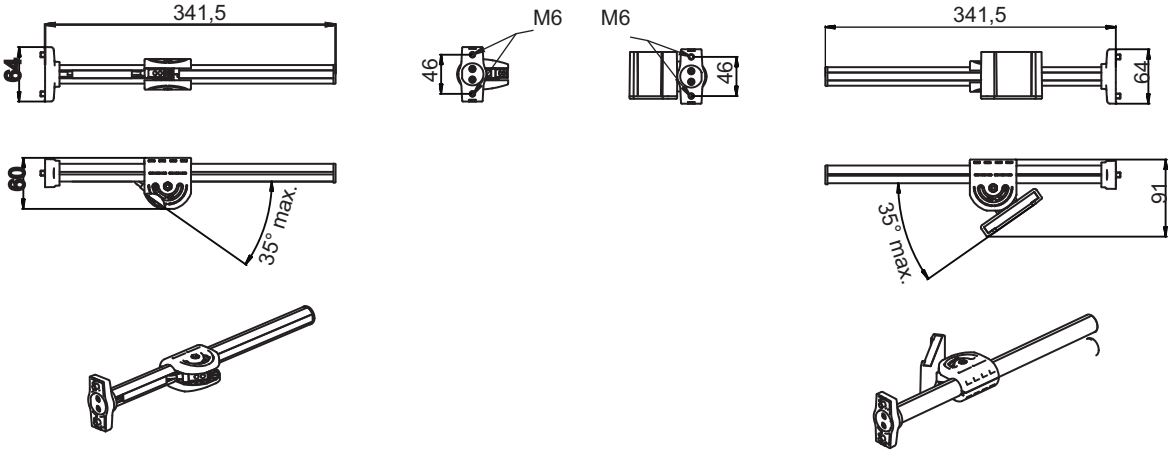

Figure 14.14: Muting sensor set, sequence controlled 2-sensor muting

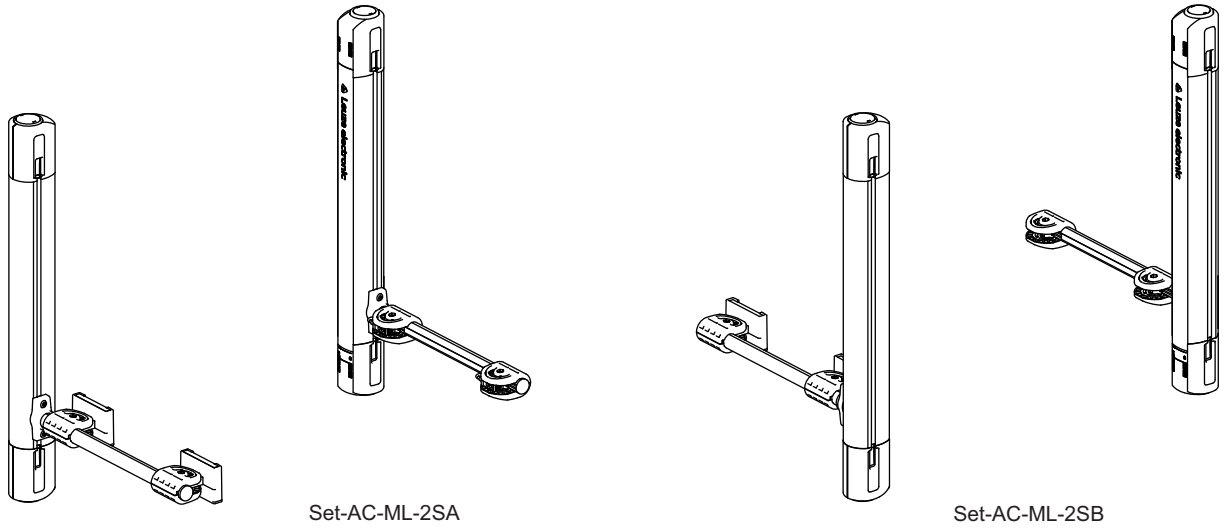

Figure 14.15: Set-AC-ML-2SA or Set-AC-ML-2SB mounted on MLD 500 multiple light beam safety device

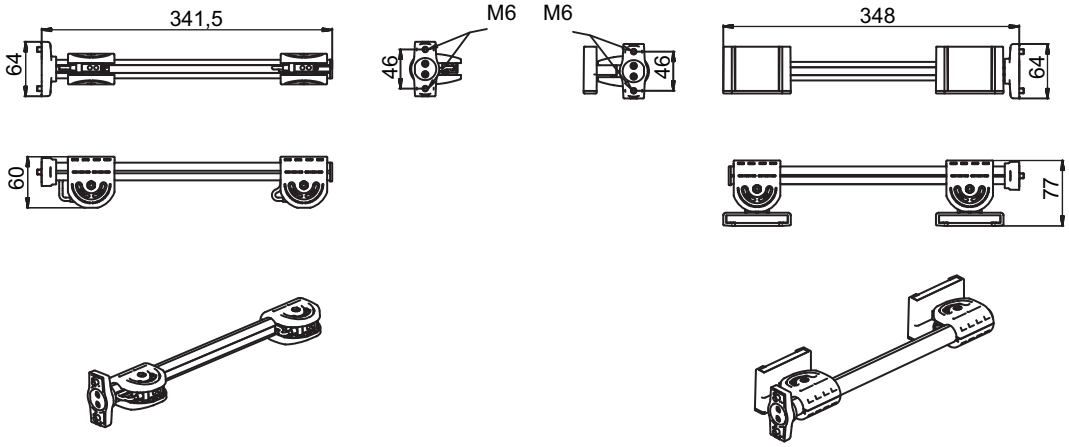

Figure 14.16: Muting sensor set, timing controlled 4-sensor muting

15 Order guide and accessories

Product designation of the safety sensor:
MLDxyy-zab/t

Table 15.1: Part number code

MLD	Multiple light beam safety device
x	Series 3 for MLD 300 or series 5 for MLD 500
yy	Function variant: 00: transmitter 10: automatic restart 12: external testing 20: EDM/RES 30: muting 35: timing controlled 4-sensor muting
z	Device type: T: transmitter R: receiver RT: transceiver xT: transmitter with high range xR: receiver for high range
a	Number of beams
b	Option: L: integrated laser alignment aid (for transmitter/receiver systems) M: integrated status indicator (MLD 320, MLD 520) or integrated status and muting indicator (MLD 330, MLD 335, MLD 510/A, MLD 530, MLD 535) E: connection socket for external muting indicator (AS-i models only)
/t	Safety-related switching outputs (OSSDs), connection technology: - transistor output, M12 plug A: integrated AS-i interface, M12 plug, (safety bus system)

Table 15.2: Selection examples

Product designation	Properties
MLD530-R1L	PL e (type 4) receiver, 1-beam with laser alignment aid
MLD320-RT3	PL c (Typ 2), EDM/RES, transceiver, 3-beam
MLD530-R2	PL e (type 4), EDM, RES, integrated muting, receiver, 2-beam
MLD500-T2L	PL e (type 4) transmitter, 2-beam with laser alignment aid
MLD-M002	Deflecting mirror, 2-beam for transceiver
MLD510-R3LE/A	PL e (type 4) receiver (3-beam) with AS-i interface as well as reflective element for laser alignment aid and connection socket for external muting indicator

Table 15.3: MLD 310 transmitter-receiver systems

Beam distance/ number of beams	Part no.	Article	Description	Option
Operating range: 0.5 - 50 m				
500 mm / 2	66001100	MLD300-T2	Transmitter	
	66033100	MLD310-R2	Receiver	
	66002100	MLD300-T2L	Transmitter	With integrated laser alignment aid
	66036100	MLD310-R2L	Receiver	With reflective element for laser alignment aid
400 mm / 3	66001200	MLD300-T3	Transmitter	
	66033200	MLD310-R3	Receiver	
	66002200	MLD300-T3L	Transmitter	With integrated laser alignment aid
	66036200	MLD310-R3L	Receiver	With reflective element for laser alignment aid
300 mm / 4	66001300	MLD300-T4	Transmitter	
	66033300	MLD310-R4	Receiver	
	66002300	MLD300-T4L	Transmitter	With integrated laser alignment aid
	66036300	MLD310-R4L	Receiver	With reflective element for laser alignment aid
Operating range: 20 - 70 m				
500 mm / 2	66001500	MLD300-XT2	Transmitter	
	66033500	MLD310-XR2	Receiver	
	66002500	MLD300-XT2L	Transmitter	With integrated laser alignment aid
	66036500	MLD310-XR2L	Receiver	With reflective element for laser alignment aid
400 mm / 3	66001600	MLD300-XT3	Transmitter	
	66033600	MLD310-XR3	Receiver	
	66002600	MLD300-XT3L	Transmitter	With integrated laser alignment aid
	66036600	MLD310-XR3L	Receiver	With reflective element for laser alignment aid

Beam distance/ number of beams	Part no.	Article	Description	Option
300 mm / 4	66001700	MLD300-XT4	Transmitter	
	66033700	MLD310-XR4	Receiver	
	66002700	MLD300-XT4L	Transmitter	With integrated laser alignment aid
	66036700	MLD310-XR4L	Receiver	With reflective element for laser alignment aid

Table 15.4: MLD 310 transceiver systems

Beam distance/ number of beams	Part no.	Article	Description
Operating range: 0.5 - 8 m			
500 mm / 2	66500100	MLD-M002	Deflecting mirror
	66037100	MLD310-RT2	Transceiver
Operating range: 0.5 - 6 m			
400 mm / 3	66500200	MLD-M003	Deflecting mirror
	66037200	MLD310-RT3	Transceiver
Operating range: 0.5 - 8 m			
400 mm / 3	66500201	MLD-XM03	Deflecting mirror
	66037200	MLD310-RT3	Transceiver

Table 15.5: MLD 312 transmitter-receiver systems

Beam distance/ number of beams	Part no.	Article	Description	Option
Operating range: 0.5 - 50 m				
500 mm / 2	66001100	MLD300-T2	Transmitter	
	66043100	MLD312-R2	Receiver	
	66002100	MLD300-T2L	Transmitter	With integrated laser alignment aid
	66046100	MLD312-R2L	Receiver	With reflective element for laser alignment aid
400 mm / 3	66001200	MLD300-T3	Transmitter	
	66043200	MLD312-R3	Receiver	
	66002200	MLD300-T3L	Transmitter	With integrated laser alignment aid
	66046200	MLD312-R3L	Receiver	With reflective element for laser alignment aid

Beam distance/ number of beams	Part no.	Article	Description	Option
300 mm / 4	66001300	MLD300-T4	Transmitter	
	66043300	MLD312-R4	Receiver	
	66002300	MLD300-T4L	Transmitter	With integrated laser alignment aid
	66046300	MLD312-R4L	Receiver	With reflective element for laser alignment aid
Operating range: 20 - 70 m				
500 mm / 2	66001500	MLD300-XT2	Transmitter	
	66043500	MLD312-XR2	Receiver	
	66002500	MLD300-XT2L	Transmitter	With integrated laser alignment aid
	66046500	MLD312-XR2L	Receiver	With reflective element for laser alignment aid
400 mm / 3	66001600	MLD300-XT3	Transmitter	
	66043600	MLD312-XR3	Receiver	
	66002600	MLD300-XT3L	Transmitter	With integrated laser alignment aid
	66046600	MLD312-XR3L	Receiver	With reflective element for laser alignment aid
300 mm / 4	66001700	MLD300-XT4	Transmitter	
	66043700	MLD312-XR4	Receiver	
	66002700	MLD300-XT4L	Transmitter	With integrated laser alignment aid
	66046700	MLD312-XR4L	Receiver	With reflective element for laser alignment aid

Table 15.6: MLD 312 transceiver systems

Beam distance/ number of beams	Part no.	Article	Description
Operating range: 0.5 - 8 m			
500 mm / 2	66500100	MLD-M002	Deflecting mirror
	66047100	MLD312-RT2	Transceiver
Operating range: 0.5 - 6 m			
400 mm / 3	66500200	MLD-M003	Deflecting mirror
	66047200	MLD312-RT3	Transceiver

Beam distance/ number of beams	Part no.	Article	Description
Operating range: 0.5 - 8 m			
400 mm / 3	66500201	MLD-XM03	Deflecting mirror
	66047200	MLD312-RT3	Transceiver

Table 15.7: MLD 320 transmitter-receiver systems

Beam distance/ number of beams	Part no.	Article	Description	Option
Operating range: 0.5 - 50 m				
500 mm / 2	66001100	MLD300-T2	Transmitter	
	66053100	MLD320-R2	Receiver	
	66054100	MLD320-R2M	Receiver	With integrated status indicator
	66002100	MLD300-T2L	Transmitter	With integrated laser alignment aid
	66056100	MLD320-R2L	Receiver	With reflective element for laser alignment aid
	66055100	MLD320-R2LM	Receiver	With reflective element for laser alignment aid and integrated status indicator
400 mm / 3	66001200	MLD300-T3	Transmitter	
	66053200	MLD320-R3	Receiver	
	66054200	MLD320-R3M	Receiver	With integrated status indicator
	66002200	MLD300-T3L	Transmitter	With integrated laser alignment aid
	66056200	MLD320-R3L	Receiver	With reflective element for laser alignment aid
	66055200	MLD320-R3LM	Receiver	With reflective element for laser alignment aid and integrated status indicator
300 mm / 4	66001300	MLD300-T4	Transmitter	
	66053300	MLD320-R4	Receiver	
	66054300	MLD320-R4M	Receiver	With integrated status indicator
	66002300	MLD300-T4L	Transmitter	With integrated laser alignment aid
	66056300	MLD320-R4L	Receiver	With reflective element for laser alignment aid
	66055300	MLD320-R4LM	Receiver	With reflective element for laser alignment aid and integrated status indicator

Beam distance/ number of beams	Part no.	Article	Description	Option
Operating range: 20 - 70 m				
500 mm / 2	66001500	MLD300-XT2	Transmitter	
	66053500	MLD320-XR2	Receiver	
	66054500	MLD320-XR2M	Receiver	With integrated status indicator
	66002500	MLD300-XT2L	Transmitter	With integrated laser alignment aid
	66056500	MLD320-XR2L	Receiver	With reflective element for laser alignment aid
	66055500	MLD320-XR2LM	Receiver	With reflective element for laser alignment aid and integrated status indicator
400 mm / 3	66001600	MLD300-XT3	Transmitter	
	66053600	MLD320-XR3	Receiver	
	66054600	MLD320-XR3M	Receiver	With integrated status indicator
	66002600	MLD300-XT3L	Transmitter	With integrated laser alignment aid
	66056600	MLD320-XR3L	Receiver	With reflective element for laser alignment aid
	66055600	MLD320-XR3LM	Receiver	With reflective element for laser alignment aid and integrated status indicator
300 mm / 4	66001700	MLD300-XT4	Transmitter	
	66053700	MLD320-XR4	Receiver	
	66054700	MLD320-XR4M	Receiver	With integrated status indicator
	66002700	MLD300-XT4L	Transmitter	With integrated laser alignment aid
	66056700	MLD320-XR4L	Receiver	With reflective element for laser alignment aid
	66055700	MLD320-XR4LM	Receiver	With reflective element for laser alignment aid and integrated status indicator

Table 15.8: MLD 320 transceiver systems

Beam distance/ number of beams	Part no.	Article	Description	Option
Operating range: 0.5 - 8 m				
500 mm / 2	66500100	MLD-M002	Deflecting mirror	
	66057100	MLD320-RT2	Transceiver	
	66058100	MLD320-RT2M	Transceiver	With integrated status indicator
Operating range: 0.5 - 6 m				
400 mm / 3	66500200	MLD-M003	Deflecting mirror	
	66057200	MLD320-RT3	Transceiver	
	66058200	MLD320-RT3M	Transceiver	With integrated status indicator
Operating range: 0.5 - 8 m				
400 mm / 3	66500201	MLD-XM03	Deflecting mirror	
	66057200	MLD320-RT3	Transceiver	
	66058200	MLD320-RT3M	Transceiver	With integrated status indicator

Table 15.9: MLD 330 transmitter-receiver systems

Beam distance/ number of beams	Part no.	Article	Description	Option
Operating range: 0.5 - 50 m				
500 mm / 2	66001100	MLD300-T2	Transmitter	
	66063100	MLD330-R2	Receiver	
	66064100	MLD330-R2M	Receiver	With integrated status and muting indicator
	66002100	MLD300-T2L	Transmitter	With integrated laser alignment aid
	66066100	MLD330-R2L	Receiver	With reflective element for laser alignment aid
	66065100	MLD330-R2LM	Receiver	With reflective element for laser alignment aid and integrated status and muting indicator

Beam distance/ number of beams	Part no.	Article	Description	Option
400 mm / 3	66001200	MLD300-T3	Transmitter	
	66063200	MLD330-R3	Receiver	
	66064200	MLD330-R3M	Receiver	With integrated status and muting indicator
	66002200	MLD300-T3L	Transmitter	With integrated laser alignment aid
	66066200	MLD330-R3L	Receiver	With reflective element for laser alignment aid
	66065200	MLD330-R3LM	Receiver	With reflective element for laser alignment aid and integrated status and muting indicator
300 mm / 4	66001300	MLD300-T4	Transmitter	
	66063300	MLD330-R4	Receiver	
	66064300	MLD330-R4M	Receiver	With integrated status and muting indicator
	66002300	MLD300-T4L	Transmitter	With integrated laser alignment aid
	66066300	MLD330-R4L	Receiver	With reflective element for laser alignment aid
	66065300	MLD330-R4LM	Receiver	With reflective element for laser alignment aid and integrated status and muting indicator
Operating range: 20 - 70 m				
500 mm / 2	66001500	MLD300-XT2	Transmitter	
	66063500	MLD330-XR2	Receiver	
	66002500	MLD300-XT2L	Transmitter	With integrated laser alignment aid
	66066500	MLD330-XR2L	Receiver	With reflective element for laser alignment aid
400 mm / 3	66001600	MLD300-XT3	Transmitter	
	66063600	MLD330-XR3	Receiver	
	66002600	MLD300-XT3L	Transmitter	With integrated laser alignment aid
	66066600	MLD330-XR3L	Receiver	With reflective element for laser alignment aid

Beam distance/ number of beams	Part no.	Article	Description	Option
300 mm / 4	66001700	MLD300-XT4	Transmitter	
	66063700	MLD330-XR4	Receiver	
	66002700	MLD300-XT4L	Transmitter	With integrated laser alignment aid
	66066700	MLD330-XR4L	Receiver	With reflective element for laser alignment aid

Table 15.10: MLD 330 transceiver systems

Beam distance/ number of beams	Part no.	Article	Description	Option
Operating range: 0.5 - 8 m				
500 mm / 2	66500100	MLD-M002	Deflecting mirror	
	66067100	MLD330-RT2	Transceiver	
	66068100	MLD330-RT2M	Transceiver	With integrated status and muting indicator
Operating range: 0.5 - 6 m				
400 mm / 3	66500200	MLD-M003	Deflecting mirror	
	66067200	MLD330-RT3	Transceiver	
	66068200	MLD330-RT3M	Transceiver	With integrated status and muting indicator
Operating range: 0.5 - 8 m				
400 mm / 3	66500201	MLD-XM03	Deflecting mirror	
	66067200	MLD330-RT3	Transceiver	
	66068200	MLD330-RT3M	Transceiver	With integrated status and muting indicator

Table 15.11: MLD 335 transmitter-receiver systems

Beam distance/ number of beams	Part no.	Article	Description	Option
Operating range: 0.5 - 50 m				
500 mm / 2	66001100	MLD300-T2	Transmitter	
	66073100	MLD335-R2	Receiver	
	66074100	MLD335-R2M	Receiver	With integrated status and muting indicator
	66002100	MLD300-T2L	Transmitter	With integrated laser alignment aid
	66076100	MLD335-R2L	Receiver	With reflective element for laser alignment aid
400 mm / 3	66001200	MLD300-T3	Transmitter	
	66073200	MLD335-R3	Receiver	
	66074200	MLD335-R3M	Receiver	With integrated status and muting indicator
	66002200	MLD300-T3L	Transmitter	With integrated laser alignment aid
	66076200	MLD335-R3L	Receiver	With reflective element for laser alignment aid
300 mm / 4	66001300	MLD300-T4	Transmitter	
	66073300	MLD335-R4	Receiver	
	66074300	MLD335-R4M	Receiver	With integrated status and muting indicator
	66002300	MLD300-T4L	Transmitter	With integrated laser alignment aid
	66076300	MLD335-R4L	Receiver	With reflective element for laser alignment aid
Operating range: 20 - 70 m				
500 mm / 2	66001500	MLD300-XT2	Transmitter	
	66073500	MLD335-XR2	Receiver	
	66002500	MLD300-XT2L	Transmitter	With integrated laser alignment aid
	66076500	MLD335-XR2L	Receiver	With reflective element for laser alignment aid

Beam distance/ number of beams	Part no.	Article	Description	Option
400 mm / 3	66001600	MLD300-XT3	Transmitter	
	66073600	MLD335-XR3	Receiver	
	66002600	MLD300-XT3L	Transmitter	With integrated laser alignment aid
	66076600	MLD335-XR3L	Receiver	With reflective element for laser alignment aid
300 mm / 4	66001700	MLD300-XT4	Transmitter	
	66073700	MLD335-XR4	Receiver	
	66002700	MLD300-XT4L	Transmitter	With integrated laser alignment aid
	66076700	MLD335-XR4L	Receiver	With reflective element for laser alignment aid

Table 15.12: MLD 335 transceiver systems

Beam distance/ number of beams	Part no.	Article	Description	Option
Operating range: 0.5 - 8 m				
500 mm / 2	66500100	MLD-M002	Deflecting mirror	
	66077100	MLD335-RT2	Transceiver	
	66078100	MLD335-RT2M	Transceiver	With integrated status and muting indicator
Operating range: 0.5 - 6 m				
400 mm / 3	66500200	MLD-M003	Deflecting mirror	
	66077200	MLD335-RT3	Transceiver	
	66078200	MLD335-RT3M	Transceiver	With integrated status and muting indicator
Operating range: 0.5 - 8 m				
400 mm / 3	66500201	MLD-XM03	Deflecting mirror	
	66077200	MLD335-RT3	Transceiver	
	66078200	MLD335-RT3M	Transceiver	With integrated status and muting indicator

Table 15.13: MLD 510 transmitter-receiver systems

Beam distance/ number of beams	Part no.	Article	Description	Option
Operating range: 0.5 - 70 m				
--- / 1	66501000	MLD500-T1	Transmitter	
	66533000	MLD510-R1	Receiver	
	66502000	MLD500-T1L	Transmitter	With integrated laser alignment aid
	66536000	MLD510-R1L	Receiver	With reflective element for laser alignment aid
Operating range: 20 - 100 m				
--- / 1	66501400	MLD500-XT1	Transmitter	
	66533400	MLD500-XR1	Receiver	
Operating range: 0.5 - 50 m				
500 mm / 2	66501100	MLD500-T2	Transmitter	
	66533100	MLD510-R2	Receiver	
	66502100	MLD500-T2L	Transmitter	With integrated laser alignment aid
	66536100	MLD510-R2L	Receiver	With reflective element for laser alignment aid
400 mm / 3	66501200	MLD500-T3	Transmitter	
	66533200	MLD510-R3	Receiver	
	66502200	MLD500-T3L	Transmitter	With integrated laser alignment aid
	66536200	MLD510-R3L	Receiver	With reflective element for laser alignment aid
300 mm / 4	66501300	MLD500-T4	Transmitter	
	66533300	MLD510-R4	Receiver	
	66502300	MLD500-T4L	Transmitter	With integrated laser alignment aid
	66536300	MLD510-R4L	Receiver	With reflective element for laser alignment aid
Operating range: 20 - 70 m				
500 mm / 2	66501500	MLD500-XT2	Transmitter	
	66533500	MLD510-XR2	Receiver	
	66502500	MLD500-XT2L	Transmitter	With integrated laser alignment aid
	66536500	MLD510-XR2L	Receiver	With reflective element for laser alignment aid

Beam distance/ number of beams	Part no.	Article	Description	Option
400 mm / 3	66501600	MLD500-XT3	Transmitter	
	66533600	MLD510-XR3	Receiver	
	66502600	MLD500-XT3L	Transmitter	With integrated laser alignment aid
	66536600	MLD510-XR3L	Receiver	With reflective element for laser alignment aid
300 mm / 4	66501700	MLD500-XT4	Transmitter	
	66533700	MLD510-XR4	Receiver	
	66502700	MLD500-XT4L	Transmitter	With integrated laser alignment aid
	66536700	MLD510-XR4L	Receiver	With reflective element for laser alignment aid

Table 15.14: MLD 510 transceiver systems

Beam distance/ number of beams	Part no.	Article	Description
Operating range: 0.5 - 8 m			
500 mm / 2	66500100	MLD-M002	Deflecting mirror
	66537100	MLD510-RT2	Transceiver
Operating range: 0.5 - 6 m			
400 mm / 3	66500200	MLD-M003	Deflecting mirror
	66537200	MLD510-RT3	Transceiver
Operating range: 0.5 - 8 m			
400 mm / 3	66500201	MLD-XM03	Deflecting mirror
	66537200	MLD510-RT3	Transceiver

Table 15.15: MLD 520 transmitter-receiver systems

Beam distance/ number of beams	Part no.	Article	Description	Option
Operating range: 0.5 - 70 m				
--- / 1	66501000	MLD500-T1	Transmitter	
	66553000	MLD520-R1	Receiver	
	66502000	MLD500-T1L	Transmitter	With integrated laser alignment aid
	66556000	MLD520-R1L	Receiver	With reflective element for laser alignment aid

Beam distance/ number of beams	Part no.	Article	Description	Option
Operating range: 20 - 100 m				
--- / 1	66501400	MLD500-XT1	Transmitter	
	66553400	MLD520-XR1	Receiver	
Operating range: 0.5 - 50 m				
500 mm / 2	66501100	MLD500-T2	Transmitter	
	66553100	MLD520-R2	Receiver	
	66554100	MLD520-R2M	Receiver	With integrated status indicator
	66502100	MLD500-T2L	Transmitter	With integrated laser alignment aid
	66556100	MLD520-R2L	Receiver	With reflective element for laser alignment aid
	66555100	MLD520-R2LM	Receiver	With reflective element for laser alignment aid and integrated status indicator
400 mm / 3	66501200	MLD500-T3	Transmitter	
	66553200	MLD520-R3	Receiver	
	66554200	MLD520-R3M	Receiver	With integrated status indicator
	66502200	MLD500-T3L	Transmitter	With integrated laser alignment aid
	66556200	MLD520-R3L	Receiver	With reflective element for laser alignment aid
	66555200	MLD520-R3LM	Receiver	With reflective element for laser alignment aid and integrated status indicator
300 mm / 4	66501300	MLD500-T4	Transmitter	
	66553300	MLD520-R4	Receiver	
	66554300	MLD520-R4M	Receiver	With integrated status indicator
	66502300	MLD500-T4L	Transmitter	With integrated laser alignment aid
	66556300	MLD520-R4L	Receiver	With reflective element for laser alignment aid
	66555300	MLD520-R4LM	Receiver	With reflective element for laser alignment aid and integrated status indicator

Beam distance/ number of beams	Part no.	Article	Description	Option
Operating range: 20 - 70 m				
500 mm / 2	66501500	MLD500-XT2	Transmitter	
	66553500	MLD520-XR2	Receiver	
	66554500	MLD520-XR2M	Receiver	With integrated status indicator
	66502500	MLD500-XT2L	Transmitter	With integrated laser alignment aid
	66556500	MLD520-XR2L	Receiver	With reflective element for laser alignment aid
	66555500	MLD520-XR2LM	Receiver	With reflective element for laser alignment aid and integrated status indicator
400 mm / 3	66501600	MLD500-XT3	Transmitter	
	66553600	MLD520-XR3	Receiver	
	66554600	MLD520-XR3M	Receiver	With integrated status indicator
	66502600	MLD500-XT3L	Transmitter	With integrated laser alignment aid
	66556600	MLD520-XR3L	Receiver	With reflective element for laser alignment aid
	66555600	MLD520-XR3LM	Receiver	With reflective element for laser alignment aid and integrated status indicator
300 mm / 4	66501700	MLD500-XT4	Transmitter	
	66553700	MLD520-XR4	Receiver	
	66554700	MLD520-XR4M	Receiver	With integrated status indicator
	66502700	MLD500-XT4L	Transmitter	With integrated laser alignment aid
	66556700	MLD520-XR4L	Receiver	With reflective element for laser alignment aid
	66555700	MLD520-XR4LM	Receiver	With reflective element for laser alignment aid and integrated status indicator

Table 15.16: MLD 520 transceiver systems

Beam distance/ number of beams	Part no.	Article	Description	Option
Operating range: 0.5 - 8 m				
500 mm / 2	66500100	MLD-M002	Deflecting mirror	
	66557100	MLD520-RT2	Transceiver	
	66558100	MLD520-RT2M	Transceiver	With integrated status indicator
Operating range: 0.5 - 6 m				
400 mm / 3	66500200	MLD-M003	Deflecting mirror	
	66557200	MLD520-RT3	Transceiver	
	66558200	MLD520-RT3M	Transceiver	With integrated status indicator
Operating range: 0.5 - 8 m				
400 mm / 3	66500201	MLD-XM03	Deflecting mirror	
	66557200	MLD520-RT3	Transceiver	
	66558200	MLD520-RT3M	Transceiver	With integrated status indicator

Table 15.17: MLD 530 transmitter-receiver systems

Beam distance/ number of beams	Part no.	Article	Description	Option
Operating range: 0.5 - 70 m				
--- / 1	66501000	MLD500-T1	Transmitter	
	66563000	MLD530-R1	Receiver	
	66502000	MLD500-T1L	Transmitter	With integrated laser alignment aid
	66566000	MLD530-R1L	Receiver	With reflective element for laser alignment aid
Operating range: 20 - 100 m				
--- / 1	66501400	MLD500-XT1	Transmitter	
	66563400	MLD530-XR1	Receiver	

Beam distance/ number of beams	Part no.	Article	Description	Option
Operating range: 0.5 - 50 m				
500 mm / 2	66501100	MLD500-T2	Transmitter	
	66563100	MLD530-R2	Receiver	
	66564100	MLD530-R2M	Receiver	With integrated status and muting indicator
	66502100	MLD500-T2L	Transmitter	With integrated laser alignment aid
	66566100	MLD530-R2L	Receiver	With reflective element for laser alignment aid
	66565100	MLD530-R2LM	Receiver	With reflective element for laser alignment aid and integrated status and muting indicator
400 mm / 3	66501200	MLD500-T3	Transmitter	
	66563200	MLD530-R3	Receiver	
	66564200	MLD530-R3M	Receiver	With integrated status and muting indicator
	66502200	MLD500-T3L	Transmitter	With integrated laser alignment aid
	66566200	MLD530-R3L	Receiver	With reflective element for laser alignment aid
	66565200	MLD530-R3LM	Receiver	With reflective element for laser alignment aid and integrated status and muting indicator
300 mm / 4	66501300	MLD500-T4	Transmitter	
	66563300	MLD530-R4	Receiver	
	66564300	MLD530-R4M	Receiver	With integrated status and muting indicator
	66502300	MLD500-T4L	Transmitter	With integrated laser alignment aid
	66566300	MLD530-R4L	Receiver	With reflective element for laser alignment aid
	66565300	MLD530-R4LM	Receiver	With reflective element for laser alignment aid and integrated status and muting indicator

Beam distance/ number of beams	Part no.	Article	Description	Option
Operating range: 20 - 70 m				
500 mm / 2	66501500	MLD500-XT2	Transmitter	
	66563500	MLD530-XR2	Receiver	
	66502500	MLD500-XT2L	Transmitter	With integrated laser alignment aid
	66566500	MLD530-XR2L	Receiver	With reflective element for laser alignment aid
400 mm / 3	66501600	MLD500-XT3	Transmitter	
	66563600	MLD530-XR3	Receiver	
	66502600	MLD500-XT3L	Transmitter	With integrated laser alignment aid
	66566600	MLD530-XR3L	Receiver	With reflective element for laser alignment aid
300 mm / 4	66501700	MLD500-XT4	Transmitter	
	66563700	MLD530-XR4	Receiver	
	66502700	MLD500-XT4L	Transmitter	With integrated laser alignment aid
	66566700	MLD530-XR4L	Receiver	With reflective element for laser alignment aid

Table 15.18: MLD 530 transceiver systems

Beam distance/ number of beams	Part no.	Article	Description	Option
Operating range: 0.5 - 8 m				
500 mm / 2	66500100	MLD-M002	Deflecting mirror	
	66567100	MLD530-RT2	Transceiver	
	66568100	MLD530-RT2M	Transceiver	With integrated status and muting indicator
Operating range: 0.5 - 6 m				
400 mm / 3	66500200	MLD-M003	Deflecting mirror	
	66567200	MLD530-RT3	Transceiver	
	66568200	MLD530-RT3M	Transceiver	With integrated status and muting indicator

Beam distance/ number of beams	Part no.	Article	Description	Option
Operating range: 0.5 - 8 m				
400 mm / 3	66500201	MLD-XM03	Deflecting mirror	
	66567200	MLD530-RT3	Transceiver	
	66568200	MLD530-RT3M	Transceiver	With integrated status and muting indicator

Table 15.19: MLD 535 transmitter-receiver systems

Beam distance/ number of beams	Part no.	Article	Description	Option
Operating range: 0.5 - 70 m				
--- / 1	66501000	MLD500-T1	Transmitter	
	66573000	MLD535-R1	Receiver	
	66502000	MLD500-T1L	Transmitter	With integrated laser alignment aid
	66576000	MLD535-R1L	Receiver	With reflective element for laser alignment aid
Operating range: 20 - 100 m				
--- / 1	66501400	MLD500-XT1	Transmitter	
	66573400	MLD535-XR1	Receiver	
Operating range: 0.5 - 50 m				
500 mm / 2	66501100	MLD500-T2	Transmitter	
	66573100	MLD535-R2	Receiver	
	66574100	MLD535-R2M	Receiver	With integrated status and muting indicator
	66502100	MLD500-T2L	Transmitter	With integrated laser alignment aid
	66576100	MLD535-R2L	Receiver	With reflective element for laser alignment aid
	66575100	MLD535-R2LM	Receiver	With reflective element for laser alignment aid and integrated status and muting indicator

Beam distance/ number of beams	Part no.	Article	Description	Option
400 mm / 3	66501200	MLD500-T3	Transmitter	
	66573200	MLD535-R3	Receiver	
	66574200	MLD535-R3M	Receiver	With integrated status and muting indicator
	66502200	MLD500-T3L	Transmitter	With integrated laser alignment aid
	66576200	MLD535-R3L	Receiver	With reflective element for laser alignment aid
	66575200	MLD535-R3LM	Receiver	With reflective element for laser alignment aid and integrated status and muting indicator
300 mm / 4	66501300	MLD500-T4	Transmitter	
	66573300	MLD535-R4	Receiver	
	66574300	MLD535-R4M	Receiver	With integrated status and muting indicator
	66502300	MLD500-T4L	Transmitter	With integrated laser alignment aid
	66576300	MLD535-R4L	Receiver	With reflective element for laser alignment aid
	66575300	MLD535-R4LM	Receiver	With reflective element for laser alignment aid and integrated status and muting indicator
Operating range: 20 - 70 m				
500 mm / 2	66501500	MLD500-XT2	Transmitter	
	66573500	MLD535-XR2	Receiver	
	66502500	MLD500-XT2L	Transmitter	With integrated laser alignment aid
	66576500	MLD535-XR2L	Receiver	With reflective element for laser alignment aid
400 mm / 3	66501600	MLD500-XT3	Transmitter	
	66573600	MLD535-XR3	Receiver	
	66502600	MLD500-XT3L	Transmitter	With integrated laser alignment aid
	66576600	MLD535-XR3L	Receiver	With reflective element for laser alignment aid

Beam distance/ number of beams	Part no.	Article	Description	Option
300 mm / 4	66501700	MLD500-XT4	Transmitter	
	66573700	MLD535-XR4	Receiver	
	66502700	MLD500-XT4L	Transmitter	With integrated laser alignment aid
	66576700	MLD535-XR4L	Receiver	With reflective element for laser alignment aid

Table 15.20: MLD 535 transceiver systems

Beam distance/ number of beams	Part no.	Article	Description	Option
Operating range: 0.5 - 8 m				
500 mm / 2	66500100	MLD-M002	Deflecting mirror	
	66577100	MLD535-RT2	Transceiver	
	66578100	MLD535-RT2M	Transceiver	With integrated status and muting indicator
Operating range: 0.5 - 6 m				
400 mm / 3	66500200	MLD-M003	Deflecting mirror	
	66577200	MLD535-RT3	Transceiver	
	66578200	MLD535-RT3M	Transceiver	With integrated status and muting indicator
Operating range: 0.5 - 8 m				
400 mm / 3	66500201	MLD-XM03	Deflecting mirror	
	66577200	MLD535-RT3	Transceiver	
	66578200	MLD535-RT3M	Transceiver	With integrated status and muting indicator

Table 15.21: MLD 510/AS-i transmitter-receiver systems

Beam distance/ number of beams	Part no.	Article	Description	Option
Operating range: 0.5 - 70 m				
--- / 1	66501001	MLD500-T1/A	Transmitter	
	66533001	MLD510-R1/A	Receiver	
	66502001	MLD500-T1L/A	Transmitter	With integrated laser alignment aid
	66536001	MLD510-R1L/A	Receiver	With reflective element for laser alignment aid
Operating range: 20 - 100 m				
--- / 1	66501401	MLD500-XT1/A	Transmitter	
	66533401	MLD500-XR1/A	Receiver	
	66533402	MLD510-XR1E/A	Receiver	With connection socket for external muting indicator
Operating range: 0.5 - 50 m				
500 mm / 2	66501101	MLD500-T2/A	Transmitter	
	66533101	MLD510-R2/A	Receiver	
	66534101	MLD510-R2M/A	Receiver	With integrated muting indicator
	66533102	MLD510-R2E/A	Receiver	With connection socket for external muting indicator
	66502101	MLD500-T2L/A	Transmitter	With integrated laser alignment aid
	66536101	MLD510-R2L/A	Receiver	With reflective element for laser alignment aid
	66535101	MLD510-R2LM/A	Receiver	With reflective element for laser alignment aid and integrated muting indicator
	66536102	MLD510-R2LE/A	Receiver	With reflective element for laser alignment aid and connection socket for external muting indicator

Beam distance/ number of beams	Part no.	Article	Description	Option
400 mm / 3	66501201	MLD500-T3/A	Transmitter	
	66533201	MLD510-R3/A	Receiver	
	66534201	MLD510-R3M/A	Receiver	With integrated muting indicator
	66533202	MLD510-R3E/A	Receiver	With connection socket for external muting indicator
	66502201	MLD500-T3L/A	Transmitter	With integrated laser alignment aid
	66536201	MLD510-R3L/A	Receiver	With reflective element for laser alignment aid
	66535201	MLD510-R3LM/A	Receiver	With reflective element for laser alignment aid and integrated muting indicator
	66536202	MLD510-R3LE/A	Receiver	With reflective element for laser alignment aid and connection socket for external muting indicator
300 mm / 4	66501301	MLD500-T4/A	Transmitter	
	66533301	MLD510-R4/A	Receiver	
	66534301	MLD510-R4M/A	Receiver	With integrated muting indicator
	66533302	MLD510-R4E/A	Receiver	With connection socket for external muting indicator
	66502301	MLD500-T4L/A	Transmitter	With integrated laser alignment aid
	66536301	MLD510-R4L/A	Receiver	With reflective element for laser alignment aid
	66535301	MLD510-R4LM/A	Receiver	With reflective element for laser alignment aid and integrated muting indicator
	66536302	MLD510-R4LE/A	Receiver	With reflective element for laser alignment aid and connection socket for external muting indicator

Beam distance/ number of beams	Part no.	Article	Description	Option
Operating range: 20 - 70 m				
500 mm / 2	66501501	MLD500-XT2/A	Transmitter	
	66533501	MLD510-XR2/A	Receiver	
	66533502	MLD510-XR2E/A	Receiver	With connection socket for external muting indicator
	66502501	MLD500-XT2L/A	Transmitter	With integrated laser alignment aid
	66536501	MLD510-XR2L/A	Receiver	With reflective element for laser alignment aid
	66536502	MLD510-XR2LE/A	Receiver	With reflective element for laser alignment aid and connection socket for external muting indicator
400 mm / 3	66501601	MLD500-XT3/A	Transmitter	
	66533601	MLD510-XR3/A	Receiver	
	66533602	MLD510-XR3E/A	Receiver	With connection socket for external muting indicator
	66502601	MLD500-XT3L/A	Transmitter	With integrated laser alignment aid
	66536601	MLD510-XR3L/A	Receiver	With reflective element for laser alignment aid
	66536602	MLD510-XR3LE/A	Receiver	With reflective element for laser alignment aid and connection socket for external muting indicator
300 mm / 4	66501701	MLD500-XT4/A	Transmitter	
	66533701	MLD510-XR4/A	Receiver	
	66533702	MLD510-XR4E/A	Receiver	With connection socket for external muting indicator
	66502701	MLD500-XT4L/A	Transmitter	With integrated laser alignment aid
	66536701	MLD510-XR4L/A	Receiver	With reflective element for laser alignment aid
	66536702	MLD510-XR4LE/A	Receiver	With reflective element for laser alignment aid and connection socket for external muting indicator

Table 15.22: MLD 510/AS-i transceiver systems

Beam distance/ number of beams	Part no.	Article	Description	
Operating range: 0.5 - 8 m				
500 mm / 2	66500100	MLD-M002	Deflecting mirror	
	66537101	MLD510-RT2/A	Transceiver	
	66538101	MLD510-RT2M/A	Transceiver	With integrated muting indicator
	66537102	MLD510-RT2E/A	Transceiver	With connection socket for external muting indicator
Operating range: 0.5 - 6 m				
400 mm / 3	66500200	MLD-M003	Deflecting mirror	
	66537201	MLD510-RT3/A	Transceiver	
	66538201	MLD510-RT3M/A	Transceiver	With integrated muting indicator
	66537202	MLD510-RT3E/A	Transceiver	With connection socket for external muting indicator
Operating range: 0.5 - 8 m				
400 mm / 3	66500201	MLD-XM03	Deflecting mirror	
	66537201	MLD510-RT3/A	Transceiver	
	66538201	MLD510-RT3M/A	Transceiver	With integrated muting indicator
	66537202	MLD510-RT3E/A	Transceiver	With connection socket for external muting indicator

Table 15.23: Accessories for the safety sensor

Part no.	Article	Description
Connection cables		
678050	CB-M12-5000E-5GM	Connection cable, 5-pin, 5 m long
678051	CB-M12-10000E-5GM	Connection cable, 5-pin, 10 m long
678052	CB-M12-15000E-5GM	Connection cable, 5-pin, 15 m long
678053	CB-M12-25000E-5GM	Connection cable, 5-pin, 25 m long
50133860	KD S-M12-5A-P1-050	Connection cable, 5-pin, 5 m long
50133861	KD S-M12-5A-P1-100	Connection cable, 5-pin, 10 m long
678057	CB-M12-15000E-5GF	Connection cable, 5-pin, 15 m long
678058	CB-M12-25000E-5GF	Connection cable, 5-pin, 25 m long
678059	CB-M12-50000E-5GF	Connection cable, 5-pin, 50 m long
50135128	KD S-M12-8A-P1-050	Connection cable, 8-pin, 5 m long

Part no.	Article	Description
50135129	KD S-M12-8A-P1-100	Connection cable, 8-pin, 10 m long
50135130	KD S-M12-8A-P1-150	Connection cable, 8-pin, 15 m long
50135131	KD S-M12-8A-P1-250	Connection cable, 8-pin, 25 m long
678064	CB-M12-50000E-8GF	Connection cable, 8-pin, 50 m long
50135139	KS S-M12-8A-P1-050	Connection cables for MLD 335, MLD 535 (local interface), 8-pin, 5 m long
50135140	KS S-M12-8A-P1-100	Connection cables for MLD 335, MLD 535 (local interface), 8-pin, 10 m long
50135141	KS S-M12-8A-P1-150	Connection cables for MLD 335, MLD 535 (local interface), 8-pin, 15 m long
50110188	KB M12/8-25000-SA	Connection cables for MLD 335, MLD 535 (local interface), 8-pin, 25 m long
Mounting brackets and mounting bracket sets		
424417	BT-2P40	Mounting set, consisting of 2 BT-P40 clamp brackets for mounting in UDC-S2 device columns
424422	BT-2SB10	Mounting set consisting of 2x BT-SB10 swiveling clamp brackets for fastening to the lateral C-groove.
560347	BT-SET-240B	Swivel mount 240° turning, material: metal
560344	BT-SET-240C	Swivel mount 240° turning, clampable, material: metal
560340	BT-SET-240BC	Mounting bracket set, consisting of BT240B, BT 240C, incl. screws, material: metal
560341	BT-SET-240CC	Mounting bracket set for mirror, consisting of 2 BT240C, incl. screws, material: metal
560342	BT-SET-240BCS	Mounting bracket set, consisting of BT240B, BT 240C, incl. screws and shock absorber, material: metal
560343	BT-SET-240CCS	Mounting bracket set for mirror, consisting of 2 BT240C, incl. screws and shock absorber, material: metal
540350	BT-SET-240BC-E	Mounting bracket set, consisting of BT240B-E, BT 240C-E, incl. screws, material: plastic/metal
540351	BT-SET-240CC-E	Mounting bracket set for mirror, consisting of 2 BT240C-E, incl. screws, material: plastic/metal
540352	BT-SET-240BCS-E	Mounting bracket set, consisting of BT240B-E, BT 240C-E, incl. screws and shock absorber, material: plastic/metal
540353	BT-SET-240CCS-E	Mounting bracket set for mirror, consisting of 2 BT240C-E, incl. screws and shock absorber, material: plastic/metal
540354	BT-SET-240C-E	Swivel mount 240° turning, clampable, material: plastic/metal

Part no.	Article	Description
540355	BT-SET-240CS-E	Swivel mount 240° turning, clampable, incl. shock absorber, material: plastic/metal
540356	BT-SET-240BS-E	Swivel mount 240° turning, incl. shock absorber, material: plastic/metal
540357	BT-SET-240B-E	Swivel mount 240° turning, material: plastic/metal
Muting accessories		
520143	AC-SCM7U	Sensor connection box for MLD 330 and MLD 530 with M12 connection, for connection to the 8-pin local socket
520144	AC-SCM7U-BT	Sensor connection box for MLD 330 and MLD 530 with M12 connection and mounting plate, for connection to the 8-pin local socket, with 2 M4x22 cheese head screws; 2 BT-NC sliding blocks
520145	AC-SCM7U-BT-L	Sensor connection box for MLD 330 and MLD 530 with M12 connection and L-mounting bracket, for connection to the 8-pin local socket, with 2 M4x22 cheese head screws; 2 BT-NC sliding blocks
520150	AC-SCM5U	Sensor connection box for MLD 335 and MLD 535 with M12 connection for connection to the 5-pin local socket
520151	AC-SCM5U-BT	Sensor connection box for MLD 335 and MLD 535 with M12 connection and mounting plate, for connection to the 5-pin local socket, with 2 M4x22 cheese head screws; 2 BT-NC sliding blocks
520152	AC-SCM5U-BT-L	Sensor connection box for MLD 335 and MLD 535 with M12 connection and L-mounting bracket, for connection to the 5-pin local socket, with 2 M4x22 cheese head screws; 2 BT-NC sliding blocks
426490	Set-AC-ML-2SA	Muting sensor set incl. 2 retro-retro-reflective photoelectric sensors, 2 reflectors
426491	Set-AC-ML-2SB	Muting sensor set incl. 2 retro-retro-reflective photoelectric sensors, 2 reflectors
426492	Set-AC-MT-4S	Muting sensor set incl. 4 retro-reflective photoelectric sensors, 4 reflectors
426494	Set-AC-MT-2S	Muting sensor set incl. 2 retro-retro-reflective photoelectric sensors, 2 reflectors
426371	MSSU-H46	Muting sensor set incl. 2 diffuse reflection sensors
426506	Set-AC-MTX.2-1S	Muting sensor set incl. 1 retro-reflective photoelectric sensor, 1 reflector
426520	Set-AC-MLX-2SA	Muting sensor set incl. 2 retro-retro-reflective photoelectric sensors, 2 reflectors
426521	Set-AC-MLX-2SB	Muting sensor set incl. 2 retro-retro-reflective photoelectric sensors, 2 reflectors
426522	Set-AC-MTX-4S	Muting sensor set incl. 4 retro-reflective photoelectric sensors, 4 reflectors

Part no.	Article	Description
426524	Set-AC-MTX-2S	Muting sensor set incl. 2 retro-retro-reflective photoelectric sensors, 2 reflectors
426526	Set-AC-MLX.2-2SA	Muting sensor set incl. 2 retro-retro-reflective photoelectric sensors, 2 reflectors
426527	Set-AC-MLX.2-2SB	Muting sensor set incl. 2 retro-retro-reflective photoelectric sensors, 2 reflectors
426528	Set-AC-MTX.2-4S	Muting sensor set incl. 4 retro-reflective photoelectric sensors, 4 reflectors
426529	Set-AC-MTX.2-2S	Muting sensor set incl. 2 retro-retro-reflective photoelectric sensors, 2 reflectors
430305	MMS-A-2N55	Mounting bracket set for muting sensors
430306	MMS-AP-N60	Mounting bracket set for muting sensors incl. 1 reflector
548800	MMS-A-1000	Muting mounting system, active side
548801	MMS-P-1000	Muting mounting system, passive side incl. 2 reflectors
548803	MMS-P-350	Muting mounting system, passive side incl. 2 reflectors
548804	MMS-A-350	Muting mounting system, active side
548805	MMS-A-1000-S	Muting mounting system, active side
548806	MMS-P-1000-S	Muting mounting system, passive side incl. 4 reflectors
Accessories for laser alignment aid		
520071	AC-MK1	MagnetKey for activation of the laser alignment aid
427300	AC-ALM	Laser alignment aid for models without integrated laser alignment aid (not for single-beam devices and transceivers)

16 EC Declaration of Conformity

Leuze electronic

the sensor people

EU-/EG-KONFORMITÄTS-ERKLÄRUNG	EU/EC DECLARATION OF CONFORMITY	DECLARATION UE/CE DE CONFORMITE
Hersteller:	Manufacturer:	Constructeur:
	Leuze electronic GmbH + Co. KG In der Braike 1, PO Box 1111 73277 Owen, Germany	
Produktbeschreibung:	Description of product:	Description de produit:
Ein- und Mehrstrahl-Sicherheits-Lichtschranke, Berührungslos wirkende Schutzeinrichtung, Sicherheitsbauteil nach 2006/42/EG Anhang IV MLD Seriennummer siehe Typenschild	**Single and Multiple Light Beam Safety Device, Active opto-electronic protective device, safety component in acc. with 2006/42/EC annex IV MLD Serial no. see name plates**	**Barrage immatériel uni- et multifaisceau de sécurité, Equipement de protection électro-sensible, Elément de sécurité selon 2006/42/CE annexe IV MLD N° série voir plaques signalétiques**
Die alleinige Verantwortung für die Ausstellung dieser Konformitätserklärung trägt der Hersteller.	This declaration of conformity is issued under the sole responsibility of the manufacturer.	La présente déclaration de conformité est établie sous la seule responsabilité du fabricant.
Der oben beschriebene Gegenstand der Erklärung erfüllt die einschlägigen Harmonisierungsrechts-vorschriften der Union:	The object of the declaration described above is in conformity with the relevant Union harmonisation legislation:	L'objet de la déclaration décrit ci-dessus est conforme à la législation d'harmonisation de l'Union applicable:
Angewandte EU-/EG-Richtlinie(n):	Applied EU/EC Directive(s):	Directive(s) UE/CE appliquées:
2006/42/EG (*1) 2014/30/EU (*2)	**2006/42/EC (*1) 2014/30/EU (*2)**	**2006/42/CE (*1) 2014/30/UE (*2)**

Angewandte harmonisierte Normen / Applied harmonized standards / Normes harmonisées appliquées:

EN 55011: 2009+A1:2010 (*2) EN ISO 13849-1: 2015	**EN 61000-6-3: 2007+A1:2011 +AC:2012 (*2)**	**EN 61496-1: 2013 (Type 2/Type 4) (*1)**

Angewandte technische Spezifikationen / Applied technical specifications / Spécifications techniques appliquées:

EN 61508-1: 2010 (SIL1/SIL3) (*1) EN 61508-4: 2010 (SIL1/SIL3) (*1)	**EN 61508-2: 2010 (SIL1/SIL3) (*1) IEC 61496-2 (ed.3) (Type 2/Type 4) (*1)**	**EN 61508-3: 2010 (SIL1/SIL3) (*1)**

Notified Body

(*1) TÜV-SÜD PRODUCT SERVICE GmbH, Zertifizierstelle, Ridlerstraße 65, D-80339 München, NB 0123, Z10 16 05 68636 014

Testing Laboratory:

(*2) CSA Group Bayern GmbH, Ohmstrasse 1-4, D-94342 Strasskirchen, NB 1948, PR 16 02 51759 001

Dokumentationsbevollmächtigter ist der genannte Hersteller, Kontakt: quality@leuze.de.
Authorized for documentation is the stated manufacturer, contact: quality@leuze.de.
Autorisé pour documentation est le constructeur déclaré, contact: quality@leuze.de

2014/30/EU veröffentlicht: 29.03.2014, EU-Amtsblatt Nr. L 96/79-106; 2014/30/EU published: 29.03.2014, EU-Journal No. L 96/79-106; 2014/30/UE publié: Journal EU n° L 96/79-106

13.10.2016

Datum / Date / Date

Ulrich Balbach, Geschäftsführer / Managing Director / Gérant

Leuze electronic GmbH + Co. KG
In der Braike 1
D-73277 Owen
Telefon +49 (0) 7021 573-0
Telefax +49 (0) 7021 573-199
info@leuze.de
www.leuze.com

LEO-ZQM-148-07-FO

Leuze electronic GmbH + Co. KG, Sitz Owen, Registergericht Stuttgart, HRA 230712
Persönlich haftende Gesellschafterin Leuze electronic Geschäftsführungs-GmbH, Sitz Owen, Registergericht Stuttgart, HRB 230550
Geschäftsführer: Ulrich Balbach
USt-IdNr. DE 145912521 | Zollnummer 2554232
Es gelten ausschließlich unsere aktuellen Verkaufs- und Lieferbedingungen
Only our current Terms and Conditions of Sale and Delivery shall apply

SMART SENSOR BUSINESS