Leuze electronic

the sensor people

SMART
SENSOR
BUSINESS

BPS 300i

Bar Code Positioning System

EN 2018/01 - 50127585
We reserve the right to
make technical changes

Original operating instructions

ПРОМЭЛЕКТРОНИКА / sales@prom-elec.com

© 2018
Leuze electronic GmbH + Co. KG
In der Braike 1
D-73277 Owen / Germany
Phone: +49 7021 573-0
Fax: +49 7021 573-199
http://www.leuze.com
info@leuze.de

1 About this document . . . 6
1.1 Used symbols and signal words . . . 6

2 Safety . . . 8
2.1 Intended use . . . 8
2.2 Foreseeable misuse . . . 8
2.3 Competent persons . . . 9
2.4 Exemption of liability . . . 9
2.5 Laser warning notices . . . 9

3 Device description . . . 12
3.1 Device overview . . . 12
3.1.1 General information . . . 12
3.1.2 Performance characteristics . . . 13
3.1.3 Accessories . . . 13
3.1.4 Device model with heating . . . 13
3.2 Connection technology . . . 14
3.2.1 MS 300 connection hood with M12 connectors . . . 14
3.2.2 MK 300 connection hood with spring-cage terminals . . . 14
3.2.3 KB 301 connection hood with cable . . . 15
3.3 Display elements . . . 16
3.3.1 LED indicators . . . 16
3.3.2 Display indicators . . . 17
3.4 Bar code tape . . . 19
3.4.1 General information . . . 19
3.4.2 Control bar codes . . . 21
3.4.3 Marker labels . . . 24
3.4.4 Twin tapes . . . 25

4 Functions . . . 26
4.1 Position measurement . . . 26
4.2 Speed measurement . . . 26
4.3 Timing . . . 27
4.4 Leuze webConfig tool . . . 27
4.5 Evaluation of the reading quality . . . 27
4.6 Distance measurement to the bar code tape . . . 27

5 Applications . . . 29
5.1 High-bay storage device . . . 30
5.2 Telpher line . . . 31
5.3 Gantry cranes . . . 32

6 Mounting and installation . . . 33
6.1 Mounting bar code tape . . . 33
6.1.1 Installation and application remarks . . . 33
6.1.2 Cutting bar code tapes . . . 34
6.1.3 Mounting the BCB . . . 35
6.2 Bar code positioning system . . . 38
6.2.1 Mounting instructions . . . 39
6.2.2 Orientation of the BPS to the bar code tape . . . 39
6.2.3 Mounting with the BTU 0300M-W mounting device . . . 40
6.2.4 Mounting with the BT 300 W mounting bracket . . . 41
6.2.5 Mounting with BT 56 mounting device . . . 41
6.2.6 Mounting with BT 300-1 mounting device . . . 42

6.2.7 Mounting with M4 fastening screws . . . 42

7 Electrical connection . . . 43
7.1 External parameter memory in the connection hood . . . 43
7.2 MS 300 connection hood with connectors . . . 43
7.3 MK 300 connection hood with spring-cage terminals . . . 44
7.4 KB 301 connection hood with cable . . . 45
7.5 Pin assignment . . . 45
7.5.1 PWR / SW IN/OUT (Power and switching input/output) . . . 45
7.5.2 RS 232/RS 422 (HOST / BUS IN) . . . 47
7.5.3 KB 301 connection cable (RS 232, RS 422) . . . 48
7.5.4 Service USB . . . 48
7.6 Cable lengths and shielding . . . 49

8 Basic configuration . . . 50
8.1 Configuring RS 232/RS 422 interface . . . 50
8.1.1 General information – RS 232/RS 422 interface . . . 50
8.2 Configuring the switching inputs/outputs . . . 50
8.3 Configuring the resolution for the position value . . . 50
8.4 Configuring speed monitoring with switching output . . . 50
8.5 Setting tape selection via the webConfig tool . . . 51
8.6 Operating the BPS on the fieldbus and on Ethernet . . . 51
8.7 Communication protocol (RS binary protocol) . . . 51
8.8 Key factory settings of the BPS . . . 55

9 Leuze electronic webConfig tool – Extended configuration . . . 57
9.1 Installing software . . . 57
9.1.1 System requirements . . . 57
9.1.2 Install USB driver . . . 57
9.2 Start webConfig tool . . . 58
9.3 Short description of the webConfig tool . . . 59
9.3.1 Overview . . . 59
9.3.2 *CONFIGURATION* function . . . 60
9.3.3 *ALIGNMENT* function . . . 64
9.3.4 *PROCESS* function . . . 64
9.3.5 *DIAGNOSTICS* function . . . 65
9.3.6 *MAINTENANCE* function . . . 66

10 Diagnostics and troubleshooting . . . 67
10.1 What to do in case of failure? . . . 67
10.1.1 Diagnostics with webConfig tool . . . 67
10.2 Operating indicators of the LEDs . . . 67
10.3 Error messages on the display . . . 68
10.4 Checklist for causes of errors . . . 68

11 Care, maintenance and disposal . . . 70
11.1 Cleaning . . . 70
11.2 Servicing . . . 70
11.2.1 Firmware update . . . 70
11.2.2 BCB repair with repair kit . . . 70
11.3 Disposing . . . 71

12 Service and support . . . 72

12.1 What to do should servicing be required? 72

13 Technical data 73
13.1 General specifications 73
13.1.1 BPS without heating 75
13.1.2 BPS with heating 75
13.2 Bar code tape 76
13.3 Dimensioned drawings 78
13.4 Dimensioned drawings: Accessories 80
13.5 Dimensioned drawing bar code tape 84

14 Order guide and accessories 85
14.1 BPS 300i type overview 85
14.2 Connection hoods 85
14.3 Cables accessories 85
14.4 Other accessories 86
14.5 Bar code tapes 87

15 EC Declaration of Conformity 89

16 Appendix 90
16.1 BCB bar code tape with 40 mm grid 90
16.2 Bar code tape BCB8 with 30 mm grid 91

1 About this document

1.1 Used symbols and signal words

Table 1.1: Warning symbols and signal words

	Symbol indicating dangers to persons
	Symbol indicating dangers from harmful laser radiation
NOTE	Signal word for property damage Indicates dangers that may result in property damage if the measures for danger avoidance are not followed.

Table 1.2: Other symbols

	Symbol for tips Text passages with this symbol provide you with further information.
	Symbol for action steps Text passages with this symbol instruct you to perform actions.

Table 1.3: Terms and abbreviations

BCB	Bar code tape (general or specific BCB type with 40 mm grid)
BCB8	Bar code tape (BCB type with 30 mm grid)
BPS	Bar code Positioning System
CFR	Code of Federal Regulations
DAP	Device Access Point
DCP	Discovery and Configuration Protocol
EMC	Electromagnetic compatibility
EN	European standard
FE	Functional earth
GSD	General Station Description
GSDML	Generic Station Description Markup Language
GUI	Graphical User Interface
IO or I/O	Input/Output
I&M	Information & Maintenance
IP	Internet Protocol
LED	Light Emitting Diode
MAC	Media Access Control
MVS	Type of control bar code
MV0	Type of control bar code

NEC	National Electric Code
OSI	Open Systems Interconnection model
PELV	Protective Extra-Low Voltage
RT	Real Time
SNMP	Simple Network Management Protocol
PLC	Programmable Logic Control Programmable Logic Control
TCP	Transmission Control Protocol
UDP	User Datagram Protocol
USB	Universal Serial Bus
UL	Underwriters Laboratories
UV	Ultraviolet
XML	Extensible Markup Language

2 Safety

This sensor was developed, manufactured and tested in line with the applicable safety standards. It corresponds to the state of the art.

2.1 Intended use

The device is an optical measuring system which uses visible red laser light to determine its position relative to a permanently mounted bar code tape.

All accuracy details for the BPS 300 measurement system refer to the position relative to the permanently mounted bar code tape.

Areas of application

The BPS is designed for positioning in the following areas of application:

- Telpher line
- Travel and lifting axes of high-bay storage devices
- Repositioning units
- Gantry crane bridges and their trolleys
- Elevators

⚠ CAUTION

Observe intended use!

↳ Only operate the device in accordance with its intended use.

The protection of personnel and the device cannot be guaranteed if the device is operated in a manner not complying with its intended use.

Leuze electronic GmbH + Co. KG is not liable for damages caused by improper use.

↳ Read the operating instructions before commissioning the device.

Knowledge of the operating instructions is an element of proper use.

NOTICE

Comply with conditions and regulations!

↳ Observe the locally applicable legal regulations and the rules of the employer's liability insurance association.

2.2 Foreseeable misuse

Any use other than that defined under “Intended use” or which goes beyond that use is considered improper use.

In particular, use of the device is not permitted in the following cases:

- in rooms with explosive atmospheres
- for medical purposes
- as own safety component in accordance with the machinery directive

Use as safety-related component within the safety function is possible, if the component combination is designed correspondingly by the machine manufacturer.

NOTICE

Do not modify or otherwise interfere with the device!

↳ Do not carry out modifications or otherwise interfere with the device.

The device must not be tampered with and must not be changed in any way.

The device must not be opened. There are no user-serviceable parts inside.

Repairs must only be performed by Leuze electronic GmbH + Co. KG.

2.3 Competent persons

Connection, mounting, commissioning and adjustment of the device must only be carried out by competent persons.

Prerequisites for competent persons:

- They have a suitable technical education.
- They are familiar with the rules and regulations for occupational safety and safety at work.
- They are familiar with the original operating instructions of the device.
- They have been instructed by the responsible person on the mounting and operation of the device.

Certified electricians

Electrical work must be carried out by a certified electrician.

Due to their technical training, knowledge and experience as well as their familiarity with relevant standards and regulations, certified electricians are able to perform work on electrical systems and independently detect possible dangers.

In Germany, certified electricians must fulfill the requirements of accident-prevention regulations DGUV (German Social Accident Insurance) provision 3 (e.g. electrician foreman). In other countries, there are respective regulations that must be observed.

2.4 Exemption of liability

Leuze electronic GmbH + Co. KG is not liable in the following cases:

- The device is not being used properly.
- Reasonably foreseeable misuse is not taken into account.
- Mounting and electrical connection are not properly performed.
- Changes (e.g., constructional) are made to the device.

2.5 Laser warning notices

ATTENTION, LASER RADIATION – LASERCLASS2

Never look directly into the beam!

The device satisfies the requirements of IEC 60825-1:2007 (EN 60825-1:2007) safety regulations for a product of **laser class 2** as well as the U.S. 21 CFR 1040.10 regulations with deviations corresponding to “Laser Notice No. 50” from June 24, 2007.

- Never look directly into the laser beam or in the direction of reflected laser beams!

  If you look into the beam path over a longer time period, there is a risk of injury to the retina.
- Do not point the laser beam of the device at persons!
- Interrupt the laser beam using a non-transparent, non-reflective object if the laser beam is accidentally directed towards a person.
- When mounting and aligning the device, avoid reflections of the laser beam off reflective surfaces!
- CAUTION! The use of operating or adjusting devices other than those specified here or carrying out of differing procedures may lead to dangerous exposure to radiation.
- Observe the applicable statutory and local laser protection regulations.
- The device must not be tampered with and must not be changed in any way.

  There are no user-serviceable parts inside the device.

  Repairs must only be performed by Leuze electronic GmbH + Co. KG.

NOTICE
Affix laser information and warning signs! Laser information and warning signs attached to the device (see figure 2.1). Also included with the device are self-adhesive laser warning and laser information signs (stick-on labels) in multiple languages (see figure 2.2). ↳ Affix the laser information sheet to the device in the language appropriate for the place of use. When using the device in the U.S.A., use the stick-on label with the “Complies with 21 CFR 1040.10” notice. ↳ Affix the laser information and warning signs near the device if no signs are attached to the device (e.g. because the device is too small) or if the attached laser information and warning signs are concealed due to the installation position. Affix the laser information and warning signs so that they are legible without exposing the reader to the laser radiation of the device or other optical radiation.

1 Laser aperture
2 Laser warning sign
3 Laser information sign with laser parameters

Figure 2.1: Laser aperture, laser warning and information signs

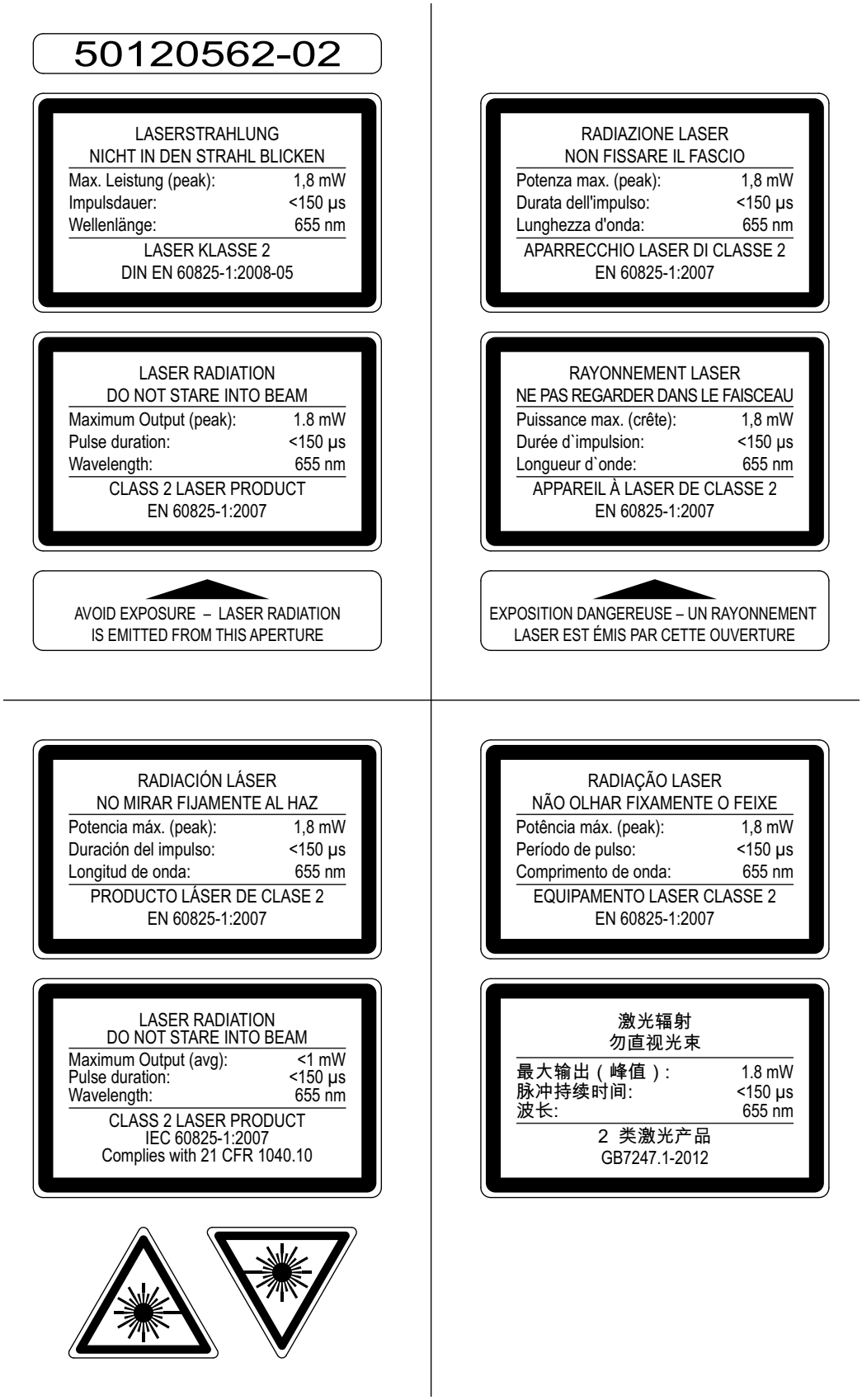

Figure 2.2: Laser warning and information signs – supplied stick-on labels

3 Device description

3.1 Device overview

3.1.1 General information

The BPS bar code positioning system uses visible red laser light to determine its position and its speed value relative to a bar code tape that is affixed along the travel path. This takes place in the following steps:

- Read a code on the bar code tape (see figure 3.1)
- Determine the position of the read code in the scanning beam
- Calculate the position to within less than a millimeter using the code information and the code position relative to the device's center.

The position and speed values are then output to the controller via the host interface.

The BPS consists of device housing and interface connection hood for the connection to the control. The BPS can optionally be delivered with display and optics heating.

The following connection hoods are available for the connection of the RS 232/RS 422 interface:

- MS 300 connection hood with M12 connectors
- MK 300 connection hood with spring-cage terminals
- KB 301 connection hood with cable

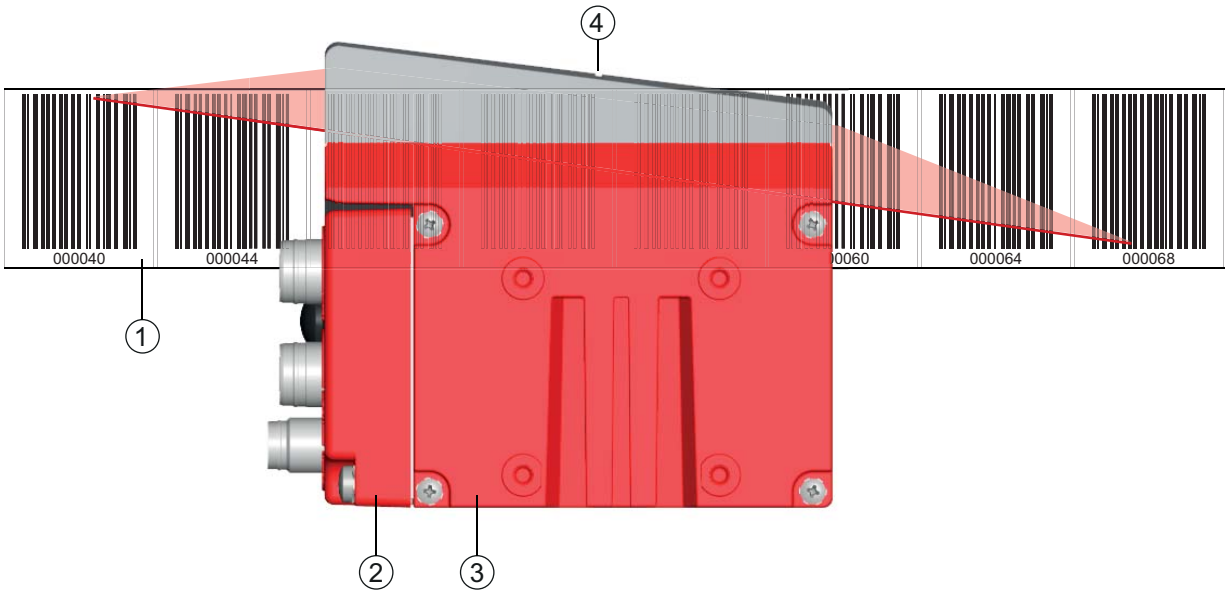

1 Bar code tape
2 Connection hood
3 Device housing
4 Middle of the scanning beam (device middle, output position value)

Figure 3.1: Device construction, device arrangement and beam exit

3.1.2 Performance characteristics

The most important performance characteristics of the bar code positioning system:

- Positioning with submillimeter accuracy from 0 to 10,000 m
- For the control at high traverse rates of up to 10 m/s
- Simultaneous position and speed measurement
- Working range: 50 to 170 mm; enables flexible mounting positions
- Interfaces: PROFINET fieldbus, PROFIBUS fieldbus, SSI, RS 232/RS 422, RS 485
- Binary inputs and outputs for control and process monitoring
- Configuration via webConfig tool or fieldbus
- Diagnostics via webConfig tool or optional display
- Optional model with display
- Optional model with heating for use to -35 °C

3.1.3 Accessories

Special accessories are available for the bar code positioning system. The accessories are optimally matched to the BPS:

- Highly flexible, scratch-, smudge- and UV-resistant bar code tape
- Mounting devices for precise mounting with one screw (easy-mount)
- Modular connection technology via connection hoods with M12 connectors, spring-cage terminals or with cable.

3.1.4 Device model with heating

The bar code positioning system is optionally available as a model with integrated heating. In this case, heating is permanently installed ex works.

NOTICE
No self-installation of the heating! ↳ Self-installation of the heating on-site by the user is not possible.

The heating consists of two parts:

- Front cover heater
- Housing heater

Features of the integrated heating:

- Extends the application range of the BPS to -35 °C
- Supply voltage 18 … 30 VDC
- BPS release through an internal temperature switch (start-up delay of about 30 min for 24 V DC and minimum ambient temperature of -35 °C)
- Required conductor cross-section for the power supply: At least 0.75 mm2

NOTICE
Do not use ready-made cables! ↳ It is not possible to use ready-made cables. The current consumption of the BPS is too high for the ready-made cables.

Function

When the supply voltage is applied to the BPS, a temperature switch initially only supplies the heating with current (front cover heater and housing heater). During the heating phase (around 30 min), when the inside temperature rises above 15 °C, the temperature switch connects the BPS to the supply voltage. This is followed by the self test and the changeover to read operation. The PWR LED lights up, showing overall readiness for operation.

When the inside temperature reaches approx. 18 °C, another temperature switch turns the housing heater off and, if necessary, back on again (if the inside temperature drops below 15 °C). This does not interrupt the read operation.

The front cover heater remains activated until an inside temperature of 25 °C is reached. At temperatures above this, the front cover heater switches off and, with a switching hysteresis of 3 °C, back on again at an inside temperature below 22 °C.

3.2 Connection technology

For the electrical connection of the BPS, the following connection variants are available:

- MS 300 connection hood with M12 connectors
- MK 300 connection hood with spring-cage terminals
- KB 301 connection hood with cable

The voltage supply (18 … 30 VDC) is connected acc. to the connection type selected.

Two freely programmable switching inputs/switching outputs for individual adaptation to the respective application are also available here.

3.2.1 MS 300 connection hood with M12 connectors

The MS 300 connection hood features two M12 connector plugs and a Mini-B type USB socket as a service interface for configuration and diagnostics of the BPS.

The integrated parameter memory for the simple replacement of the BPS is located in the MS 300.

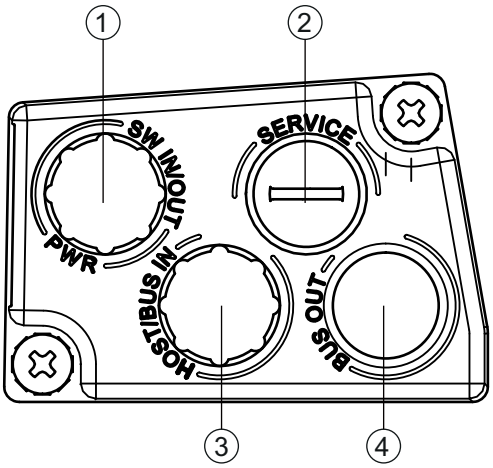

1 PWR / SW IN/OUT: M12 plug (A-coded)
2 SERVICE: Mini-B USB socket (behind protective cap)
3 HOST / BUS IN: M12 plug (B-coded), RS 232/422
4 BUS OUT: not equipped

Figure 3.2: MS 300 connection hood, connections

NOTICE
Shielding connection
↳ The shielding connection is done via the M12 connector housing.

3.2.2 MK 300 connection hood with spring-cage terminals

The MK 300 connection hood makes it possible to connect the BPS directly and without additional connectors. The MK 300 features cable bushings in which the shielding connection for the interface cable is also located. A Mini-B type USB socket is used for service purposes and for configuration and diagnostic of the BPS.

The integrated parameter memory for the simple replacement of the BPS is located in the MK 300.

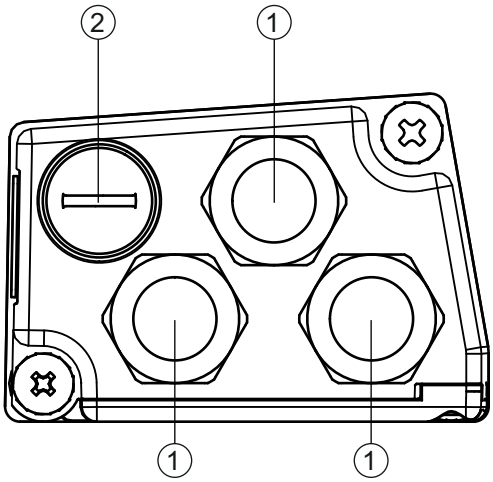

1 3x cable bushing, M16 x 1.5
2 SERVICE: Mini-B USB socket (behind protective cap)

Figure 3.3: Connection hood MK 300, connections

ПРОМЭЛЕКТРОНИКА / sales@prom-elec.com

Cable fabrication and shielding connection

- Remove approx. 78 mm of the connection cable sheathing.

  15 mm of sheath of the shielded line must be freely accessible.
- Lead the individual wires into the terminals according to the diagram.

NOTICE
Do not use wire-end sleeves!
When fabricating cables, we recommend against using wire-end sleeves.

The shield is automatically contacted when the cable is lead into the metal screw fitting and fastened when the cord grip is closed.

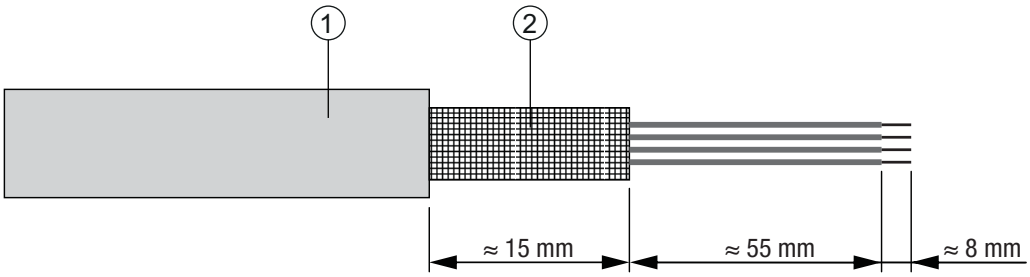

1 Diameter of contact area, cable: 6 … 9.5 mm
2 Diameter of contact area, shield: 5 … 9.5 mm

Figure 3.4: Cable fabrication for connection hoods with spring-cage terminals

3.2.3 KB 301 connection hood with cable

With connection hood KB 301, it is possible to directly connect the BPS. A Mini-B type USB socket is used for service purposes and for configuration and diagnostic of the BPS.

The length of the connection cable is 3 m.

To connect, the system plugs (JST) at the end of the cable must be removed.

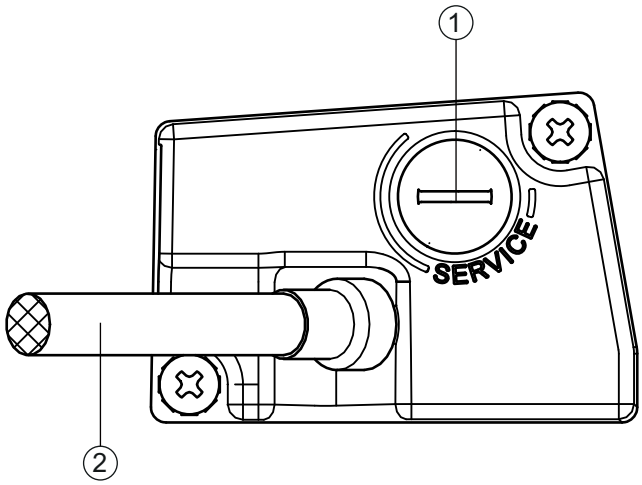

1 SERVICE: Mini-B USB socket (behind protective cap)
2 Connection cable

Figure 3.5: Connection hood KB 301-3000

3.3 Display elements

The BPS is available optionally with display, two control buttons and LEDs or with only two LEDs as indicators on the device housing.

3.3.1 LED indicators

The device housing features the following multicolor LED indicators as primary display element:

- PWR
- BUS

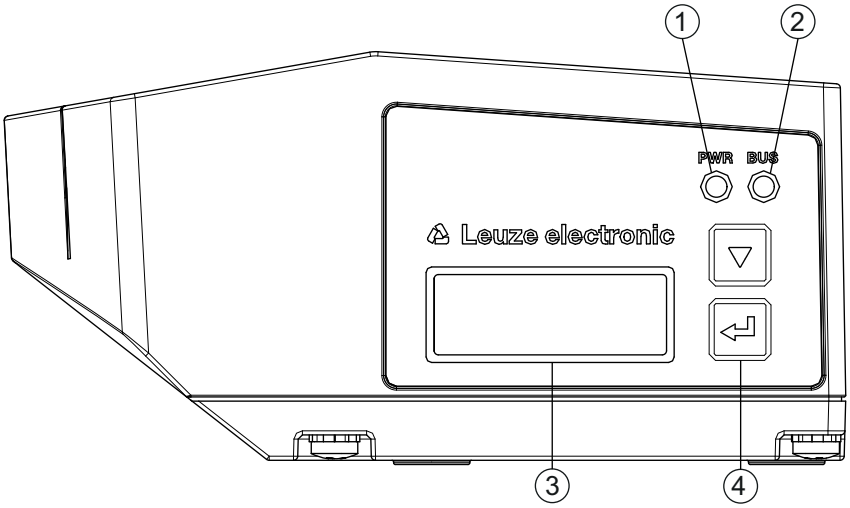

1 PWR LED
2 LED BUS
3 Display
4 Control buttons

Figure 3.6: Indicators on the device housing

Table 3.1: Meaning of the LED indicators on the device housing

LED	Color, state	Description
LED 1 PWR	Off	Device is switched off • No supply voltage
	Green, flashing	Device is being initialized • Supply voltage connected • Initialization running • No measurement value output
	Green, continuous light	Device in operation • Initialization finished • Measurement value output
	Red, flashing	Warning set • No measurement (e.g. no bar code tape)
	Orange, continuous light	Service active • No data on the host interface • Configuration via USB service interface
LED 2 BUS	Off	No supply voltage
	Green, flashing	Initialization of the host interface • No communication
	Green, continuous light	Host interface active • Communication possible
	Red, flashing	Communication error detected

3.3.2 Display indicators

The optional display of the BPS is only used as a display element. The display has the following features:

- Monochromatic with white background lighting
- Double line, 128 x 32 pixels
- Display language: English

Two control buttons can be used to control which values appear in the display.

The background lighting is activated by pressing any control button and is automatically deactivated after ten minutes have passed.

The display shows the content on two lines:

- The upper display line shows the selected function as an English term.
- The lower display line shows the data of the selected function.

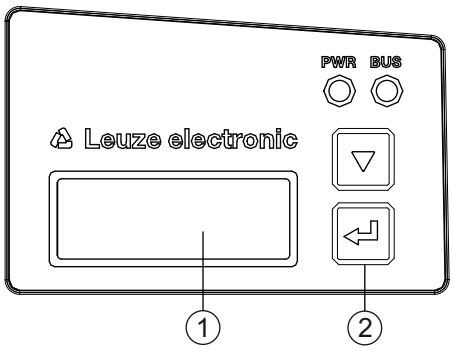

1 Display
2 Control buttons

Figure 3.7: Display on the device housing

Display functions

The following functions can be displayed and activated in the display:

- Position value
  - *Position Value*
  - Position value in mm
    Display with "." as decimal separator character (e.g., *+ 34598.7 mm*)
- Reading quality
  - *Quality*
  - 0 … 100%
- Device status
  - *BPS Info*
  - *System OK* | *Warning* | *Error*
- I/O status
  Status of the inputs/outputs
  - *I/O status*
  - *IO1 In:0* | *IO2 Out:0*
    In/Out depending on configuration, 0/1 for state of the I/O
- Transmission standard of the serial interface
  - Interface
  - RS 232/RS 422
- Version information
  Software and hardware version of the device
  - *Version*
  - *SW: V1.3.0 HW:1*

NOTICE
Laser activation by selecting *Quality*!
↳ If measurement is stopped, the laser is activated by selecting *Quality*.

The display is controlled via the control buttons:

- ↵ – **Enter**: activate or deactivate the display shift function
- ▼ – **Down**: scroll through functions (downwards)

Example: Representation of the I/O status on the display

1. Press button ↵ : Display flashes
2. Press button ▼ : Display changes from position value (*Position Value*) to reading quality (*Quality*)
3. Press button ▼ : Display changes from reading quality (*Quality*) to device status (*BPS Info*)
4. Press button ▼ : Display changes from device status (*BPS Info*) to I/O status
5. Press button ↵ : I/O status displayed, display stops flashing

Display during device start-up

During device start-up, a start-up display first appears which is briefly followed by the display with the version information.
The standard display after starting up the BPS is *Position Value*.

3.4 Bar code tape

3.4.1 General information

The bar code tape is available in different variants:

- BCB bar code tape with 40 mm grid
  Code128 with character set C, increasing in increments of 4 (e.g., 000004, 000008, …)
- Bar code tape BCB8 with 30 mm grid
  Code128 with character set C, increasing in increments of 3 (e.g. 000003, 000006, …)

A bar code tape consists of a sequence of individual position labels in one of the two grids. Defined cut marks are provided for cutting the BCB.

The bar code tape is delivered on a roll. A roll contains up to 200 m of BCB, with the wrapping direction from the outside to the inside (smallest number on the outside). If more than 200 m of BCB is ordered, the total length is divided into rolls of 200 m.

Bar code tapes with special requirements with respect to height, length and value range can be ordered from **Leuze electronic** (see chapter 14.5 "Bar code tapes").

NOTICE
Value range for BCB with special requirements!
↳ When ordering bar code tapes with special requirements, make certain that the value range contains only values that are divisible by three (BCB8 with 30 mm grid) or four (BCB with 40 mm grid). It may otherwise not be possible to purchase and use repair tapes.

NOTICE
Only one BCB type per system!
↳ In a given system, use either only BCB8 with 30 mm grid or only BCB with 40 mm grid. If different BCB types are used in one system, the BPS cannot ensure an exact position determination.

NOTICE
Configure the BPS for the used BCB type!
↳ The used BCB type must be set in the webConfig tool with the *Tape selection* parameter; see chapter 9.3.2 "CONFIGURATION function". ↳ On delivery, the BPS is set for BCB with a 40 mm grid. If the BCB8 with a 30 mm grid is used, the *Tape selection* must be adjusted in the BPS configuration. ↳ If the used BCB type does not correspond to the *Tape selection* configured in the BPS, exact position determination cannot be performed by the BPS.

BCB bar code tape with 40 mm grid

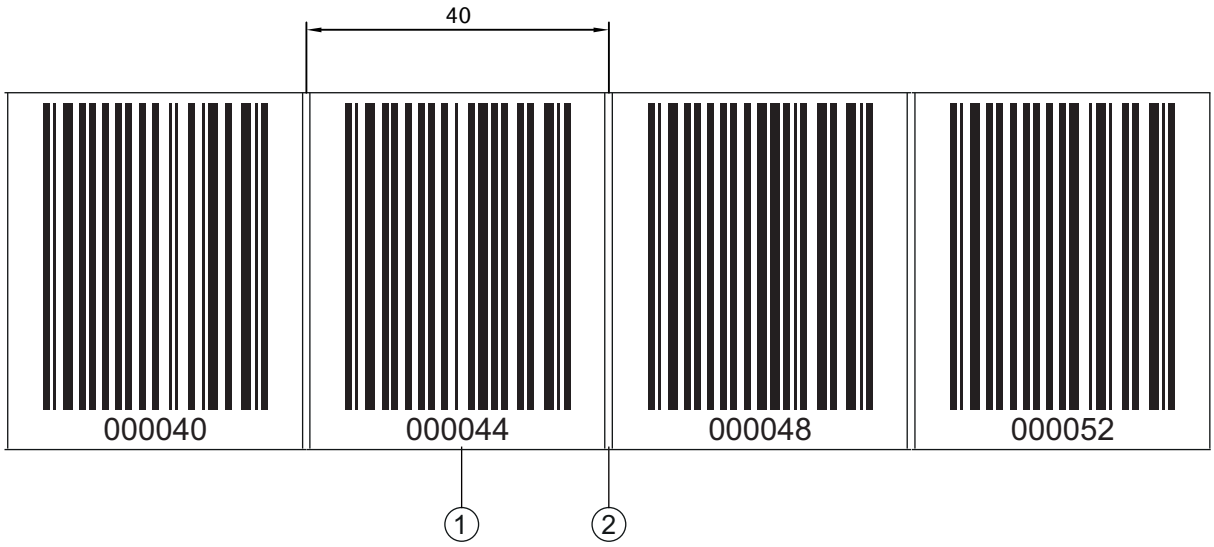

1 Position label with position value
2 Cut mark

Figure 3.8: Bar code tape with 40 mm grid

The standard height of 47 mm can be adapted. Other BCB height (25 mm) and special heights on request.

With a standard bar code tape and a repair tape with 40 mm grid, the printed numerical values are divisible by four without a remainder.

Bar code tape BCB8 with 30 mm grid

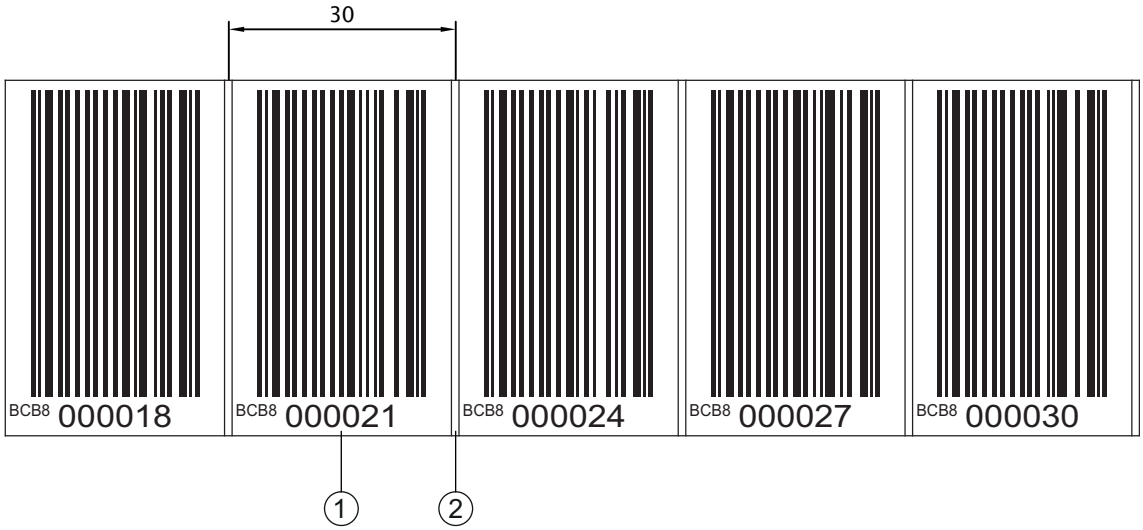

1 Position label with position value
2 Cut mark

Figure 3.9: Bar code tape with 30 mm grid

The standard height of 47 mm can be adapted. Other BCB heights (25 mm and 30 mm) and special heights on request.

With a standard bar code tape and repair tape with 30 mm grid, the printed numerical values are divisible by three without a remainder.

For bar code tapes with 30 mm grid, the designation *BCB8* is printed in plain text in addition to the position value.

3.4.2 Control bar codes

With the help of control bar codes that are affixed on top of the bar code tape at appropriate positions, functions in the BPS can be activated or deactivated, e.g., for changing various position values at switches.

Code type Code128 with character set B is used for the control bar code.

The *MVS* label is a control bar code for the direction-independent switching of the position values from one bar code tape to another in the middle of the control bar code label.

- If, upon reaching the changeover position in the middle of the *MVS* label, the BPS does not detect the new BCB section in the scanning beam, the position value of the first BCB section is still output after the middle of the *MVS* label for half of the label width.

The *MV0* label is a control bar code for the deactivation of the position output.

- If the BPS detects the middle of the *MV0* label, no position values are output after the middle of the *MV0* label.

Arrangement of the control bar codes

The control bar code is attached in such a way that it replaces one position bar code or seamlessly connects two bar code tapes with different value ranges to one another (see figure 3.10).

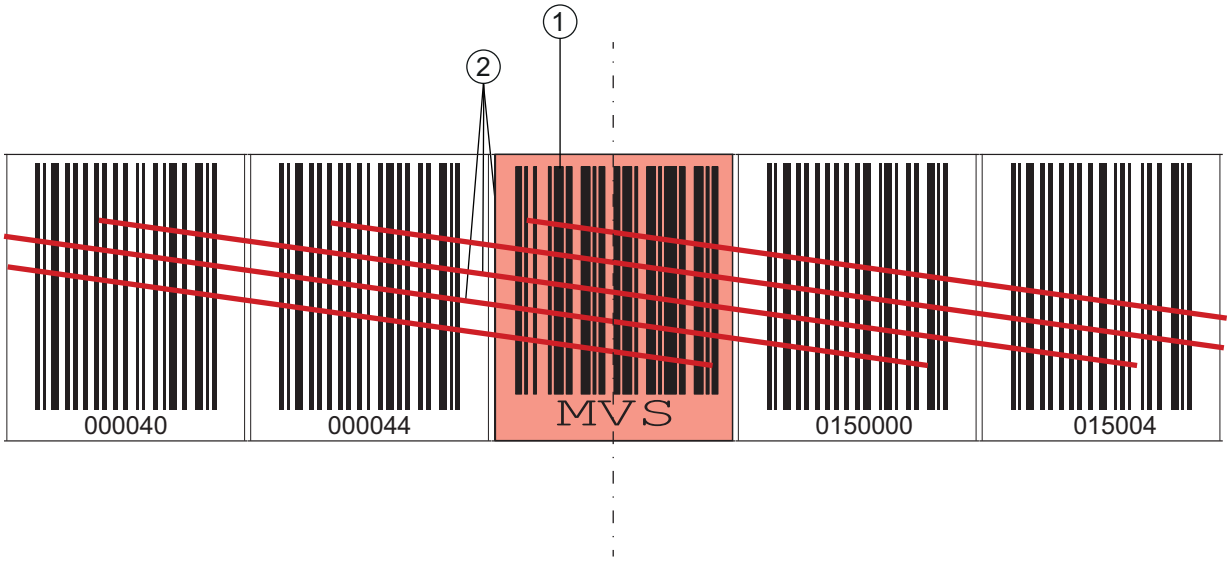

1 Control bar code
2 The control bar code is decoded in the marked scans

Figure 3.10: Arrangement of the MVS control bar code

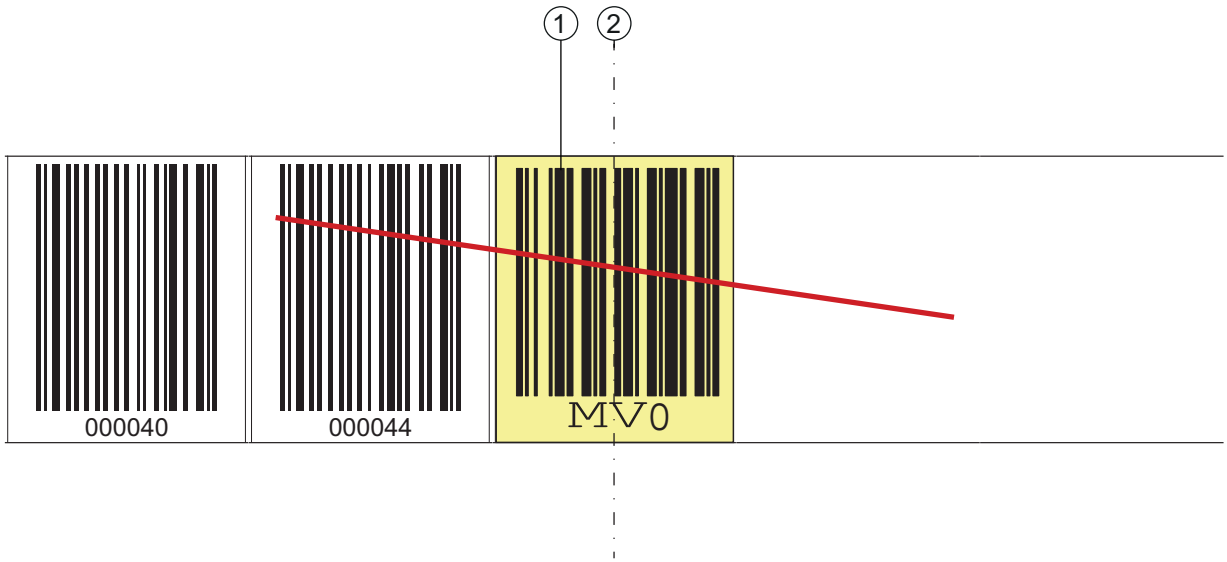

1 Control bar code
2 End of position determination from the middle of the control bar code

Figure 3.11: Arrangement of the MV0 control bar code

NOTICE
Distance between two control bar codes!
↳ Make certain that there is only one control bar code (or marker label) in the scanning beam at a time. The minimum distance between two control bar codes is determined by the distance between the BPS and bar code tape and the resulting length of the scanning beam.

The control bar codes are simply affixed over the existing bar code tape.
A control bar code should cover an entire position bar code and must have the correct grid dimension (see figure 3.12):

- 30 mm with BCB8 bar code tapes
- 40 mm with BCB bar code tapes

Keep the gap between the BCBs that are switched between as small as possible.

1 Control bar code perfectly affixed on the bar code tape
2 Control bar code at small gap between two bar code tapes

Figure 3.12: Correct positioning of the control bar code

NOTICE
Gaps in bar code tape
↳ Avoid polished and high-gloss surfaces.
↳ Keep the gaps between the two bar code tapes and the control bar code as small as possible.

Measurement value switching between two bar code tapes with different value ranges

The *MVS* or *MV0* control bar code is used to switch between two bar code tapes.

NOTICE
1 m minimum distance of the bar code values for measurement value switching!
↳ For different BCB value ranges, make certain that the minimum distance of 1 m between the preceding position bar code (before the control bar code) and the subsequent position bar code (after the control bar code) is maintained. Example (BCB with 40 mm grid): If the last position bar code on the BCB before the control bar code is *75120*, the following position bar code on the BCB after the control bar code must be at least *75220*. If the minimum distance between the bar code values is not maintained, position determination may be faulty.

- The end of the preceding bar code tape and the start of the subsequent bar code tape can end and begin, respectively, with completely different position bar codes.
- BCB changeover by means of a control bar code always occurs at the same position, i.e., it serves to change from the preceding tape to the subsequent tape and vice versa.
- If the center of the BPS reaches the transition point of the control bar code, the device switches to the second BCB, provided the next position label is in the BPS's scanning beam (see figure 3.13). The output position value is thereby always uniquely assigned to one BCB.

If the BPS does not detect the new BCB section upon reaching the changeover position, the position-value output is dependent on the used control bar code.

MVS control bar code: The position value of the first BCB is output beyond the middle of the *MVS* label for half of the label width.

MV0 control bar code: No position values are output after the middle of the *MV0* label.

- When the control label is passed, the new BCB value is output relative to the middle of the device or label.

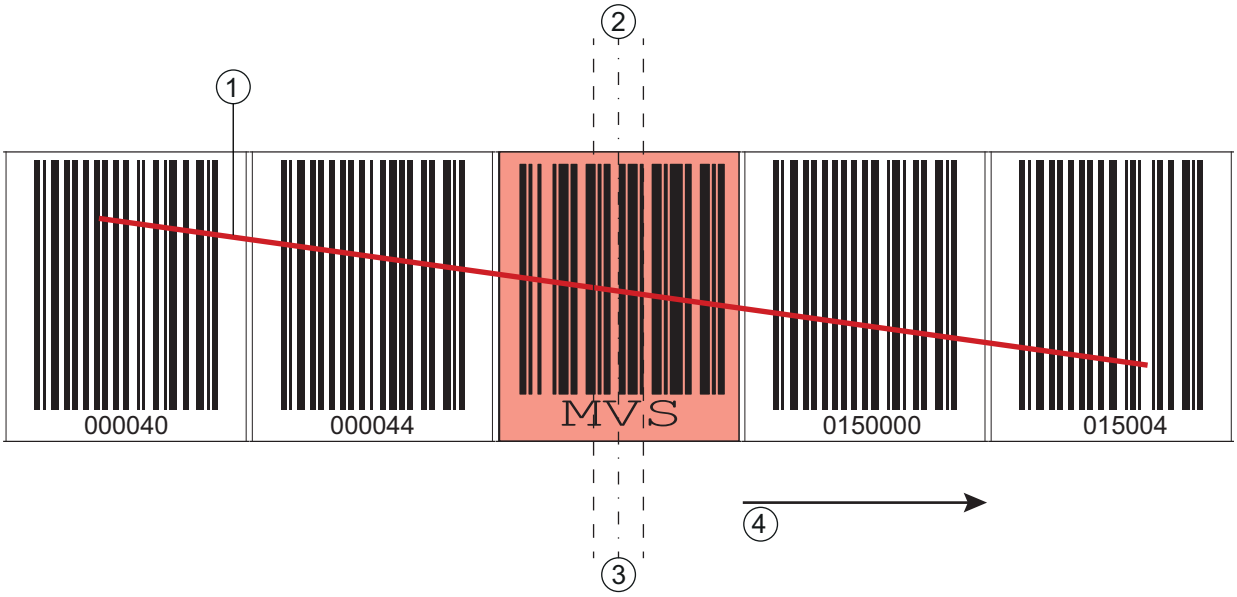

1 Scanning beam
2 Middle of the control bar code
3 Middle of the BPS
4 Direction of movement

Figure 3.13: Changeover position with *MVS* control bar code for BCB changeover

3.4.3 Marker labels

Marker labels, which are affixed at the appropriate locations on top of the bar code tape, can be used to trigger various functions in the superior control. The BPS detects the defined marker labels in the scanning beam, decodes them, and makes them available to the control.

NOTICE
Distance between two marker labels!
↳ Make certain that there is only one marker label (or control bar code) in the scanning beam at a time.
The minimum distance between two marker labels is determined by the distance between the BPS and bar code tape and the resulting length of the scanning beam.

Definition of the marker label

The following combinations of letters and numbers may be used as marker labels:

First character: A … Z, a … z

Second character: Digit from 0 … 9

Third character: Digit from 0 … 9

Structure of the marker labels

Code type Code128 with character set B is used for the marker labels.

Arrangement when using the marker label with positioning

The marker label must be attached to the bar code tape aligned with the grid of the actual coding. A position code should be visible before and after the marker label.

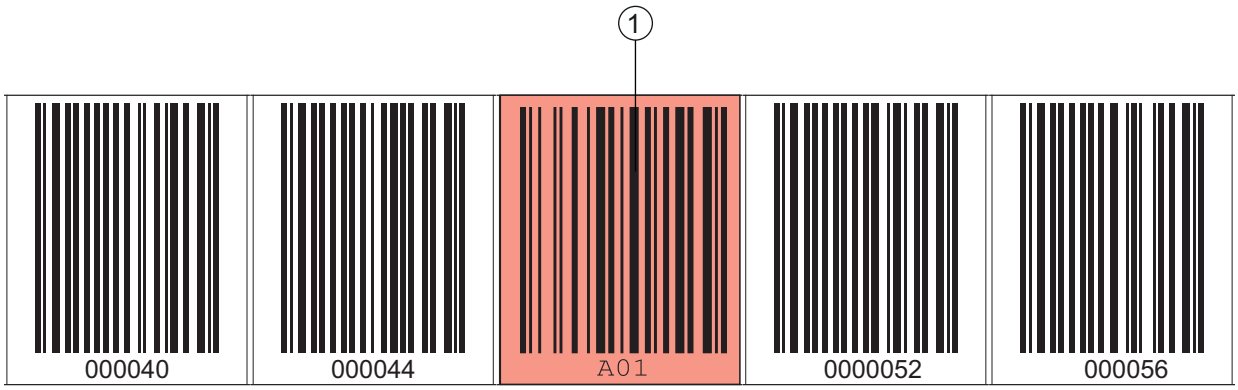

1 Marker label

Figure 3.14: System arrangement of marker labels

Arrangement when using the marker label without positioning

The marker label must be positioned within the BPS's detection range.

3.4.4 Twin tapes

Twin tapes are jointly manufactured bar code tapes with the same value range.

NOTICE
A twin tape always consists of two bar code tapes!
↳ When ordering a twin tape, two bar code tapes are always included with an order.

Twin tapes are used if positioning with two bar code tapes is necessary, e.g., with crane systems or elevators.

Because they are manufactured jointly, both tapes have the same length tolerance. As a result, differences in length and code position are minimal. By having the same code position on both tapes, improved synchronization can be achieved during positioning compared to bar code tapes that are manufactured separately.

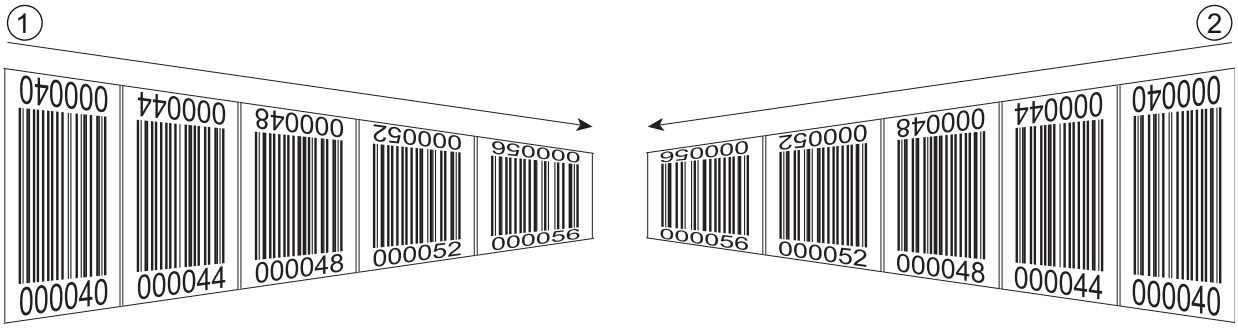

1 Twin bar code tape 1
2 Twin bar code tape 2

Figure 3.15: Twin tape with double numbering

Twin tapes are always delivered in pairs on two rolls.

If twin tapes are replaced, both tapes are to be replaced.

Twin tapes can be ordered from **Leuze electronic** (see chapter 14.5 "Bar code tapes").

4 Functions

This chapter describes the functions of the BPS and the parameters for adaptation to the respective application conditions and requirements.

The parameters are set via the webConfig tool; see chapter 9 "Leuze electronic webConfig tool – Extended configuration".

Main functions:

- Position measurement
- Speed measurement

The following parameters are relevant for the timing of the position and speed measurement:

- Measurement value preparation
  Configurable response time
- Measurement error tolerance
  Configurable time-based error suppression

4.1 Position measurement

The output value of the position measurement is calculated from the measurement and the settings for resolution, preset, offset, etc.

The most important individual parameters for the position measurement are:

Parameter	Description	Range/Values
Position resolution	The parameter specifies the resolution of the position value. It acts only on the host interface. The resolution has no effect on the set parameter values such as offset or preset.	0.001 mm 0.01 mm 0.1 mm 1 mm 10 mm or Free resolution
Unit	The parameter specifies the measurement unit of the measured position and speed. The selection of the measurement unit affects all parameters with measurement units.	Metric (mm) or Inch (1/100 in)
Offset	The offset is used to correct the position value by a fixed amount. If the offset is activated, the offset is added to the position value. This yields a new output value: Output value = position value + offset	1 mm or inch/100
Preset	Like the offset, the preset is used to correct the position value. With preset, a preset value is specified. The value is accepted during a corresponding event (switching input or fieldbus). If the preset is activated, this has priority over the offset.	1 mm or inch/100

4.2 Speed measurement

The current speed is ascertained and output on the basis of the respective position values.

The most important individual parameters for the speed measurement are:

Parameter	Description	Range/Values
Speed resolution	The parameter defines the resolution of the speed value. It affects only the fieldbus output.	1 mm/s 10 mm/s 100 mm/s 1000 mm/s or Free resolution
Averaging	The parameter specifies the averaging time of the calculated speed values in steps.	Steps: 2 ms, 4 ms, 8 ms, 16 ms, 32 ms, 64 ms, 128 ms

4.3 Timing

The BPS of the 300i series operate with a scanning rate of 1000 scans per second. A measurement value is ascertained every 1 ms.

The following parameters are relevant for the timing of the position and speed measurement:

Parameter	Description	Range/Values
Integration depth	The integration depth affects the measurement of position and speed. The *integration depth* parameter specifies the number of sequential measurements that the BPS uses for position determination. The integration results in smoothing of the output measurement value. An *integration depth* of 8 (position determination with 8 measurement values) results in a response time of 8 ms.	Factory setting: 8
Error delay time	Errors that occur are suppressed for the configured time. If no valid position or speed value can be ascertained in the configured *error delay time*, the last valid value is always output. If the error persists after the *error delay time* elapses, the value of the *Position/Speed value in case of error* parameter is then output (standard).	Factory setting: 50 ms

4.4 Leuze webConfig tool

The webConfig configuration tool offers a graphical user interface for the display of process data, configuration and diagnostics of the BPS via a PC; see chapter 9 "Leuze electronic webConfig tool – Extended configuration".

4.5 Evaluation of the reading quality

The BPS can signal the reading quality of the BPS. The reading quality is displayed in % values.

The values of the reading quality are displayed via the optional display (*Quality*), the serial communication protocol and via the webConfig tool; see chapter 9.3.3 "ALIGNMENT function".

The evaluation of the reading quality provides the following information, e.g.:

- The reading quality is constantly bad: Soiling of the BPS optics
- The reading quality is always bad at certain position values: Soiling of the BCB

4.6 Distance measurement to the bar code tape

Within the reading field, the BPS can output the current distance from the read head to the BCB. The distance from the position label closest to the reference point is output.

The distance measurement value is output via:

- The *ALIGNMENT* function (*Quality* menu) in the webConfig tool (see chapter 9.3.3); this function is only available in the *Service* operating mode.

5 Applications

Wherever systems are moved automatically, it is necessary to uniquely determine their respective positions. In addition to mechanical measuring sensors, optical methods are particularly well suited for position determination as they can be used to determine position without mechanical wear and slippage.

Compared to common optical measurement techniques, the Leuze electronic Bar code Positioning System (BPS) is able to measure a position with absolute sub-millimeter accuracy, i.e. independent of reference points. As a result, it is able to provide a unique position value at any time. With the highly flexible and hard-wearing Bar Code Tape (BCB), the system can even be used without problem in systems with curves or guide tolerances. And this at lengths of up to 10,000 meters.

The product family of Leuze electronic bar code positioning systems convinces with a variety of advantages:

- The laser simultaneously scans three bar codes and, as a result, is able to determine the position with sub-millimeter accuracy. The wide reading field makes accurate position determination possible even in the event of minor damage to the tape.
- With the systems' flexible depth of field, it is also possible to bridge over mechanical deviations.
- Due to the large reading distance combined with the great depth of field, a large opening angle and a very compact construction, the device is ideally suited for the conveyor and storage technology market.
- The BPS devices are capable of simultaneously measuring position and speed and are thus also suitable for control tasks in your automation applications.
- Using a mounting device, the BPS can be mounted with millimeter accuracy with just one screw. If mounted using a mounting device, a new device is automatically aligned correctly should it be necessary to exchange a device (easy-mount).
- The unique labeling of the bar code tape allows the system to be put back into operation without problem even after a brief voltage drop without, e.g., needing to utilize a reference point.
- The Leuze electronic bar code tape is very robust, highly flexible and, thanks to the self-adhesive back, can be easily integrated into your overall mechanical system. It can be fit optimally to both vertical as well as horizontal curved paths and thereby reliably facilitates trouble-free and reproducible measurement at any point in your system with sub-millimeter accuracy.

Typical applications for the BPS include:

- High-bay storage device (see chapter 5.1)
- Telpher line (see chapter 5.2)
- Gantry cranes (see chapter 5.3)

5.1 High-bay storage device

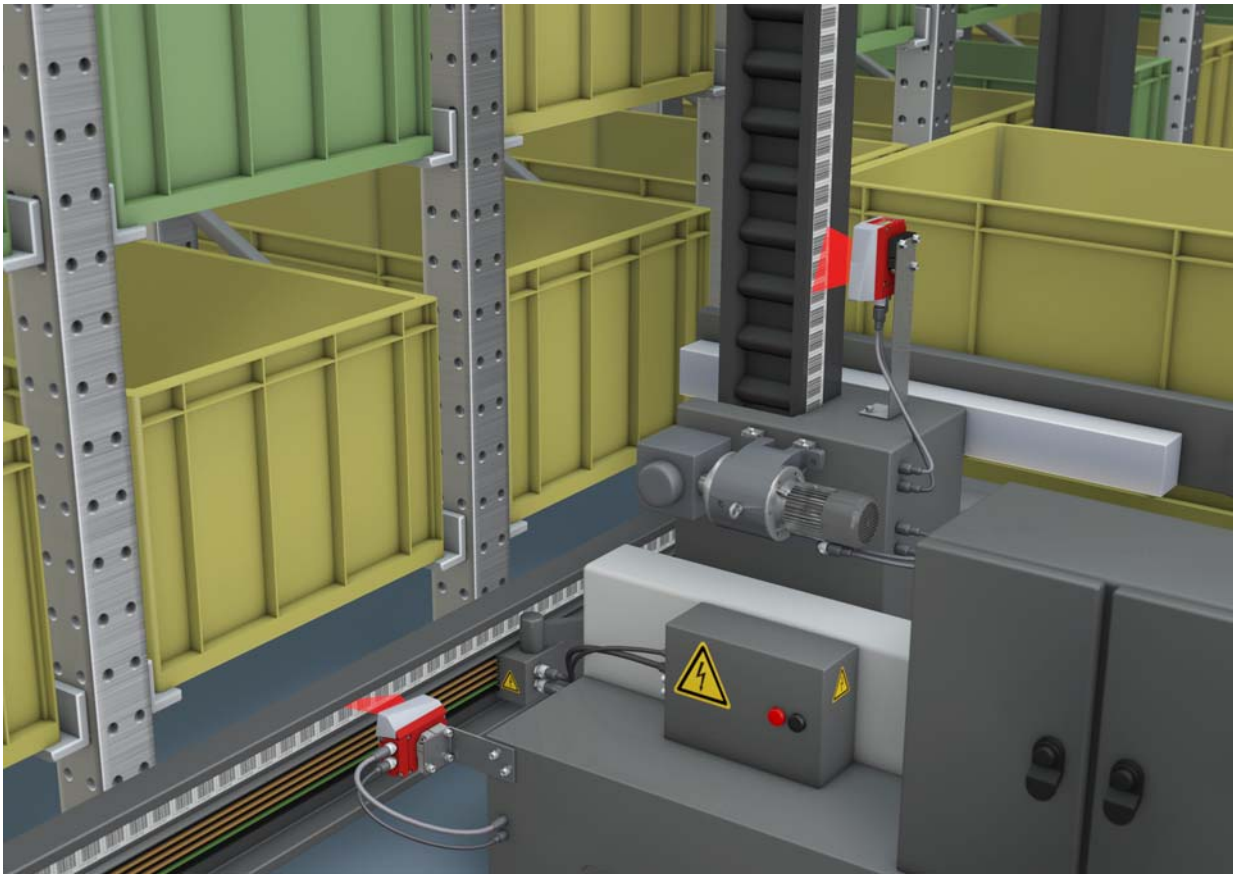

Figure 5.1: High-bay storage device

- Simultaneous position and speed measurement for regulation tasks
- Precise positioning with a reproducibility of ± 0.15 mm
- Control at high traverse rates of up to 10 m/s

5.2 Telpher line

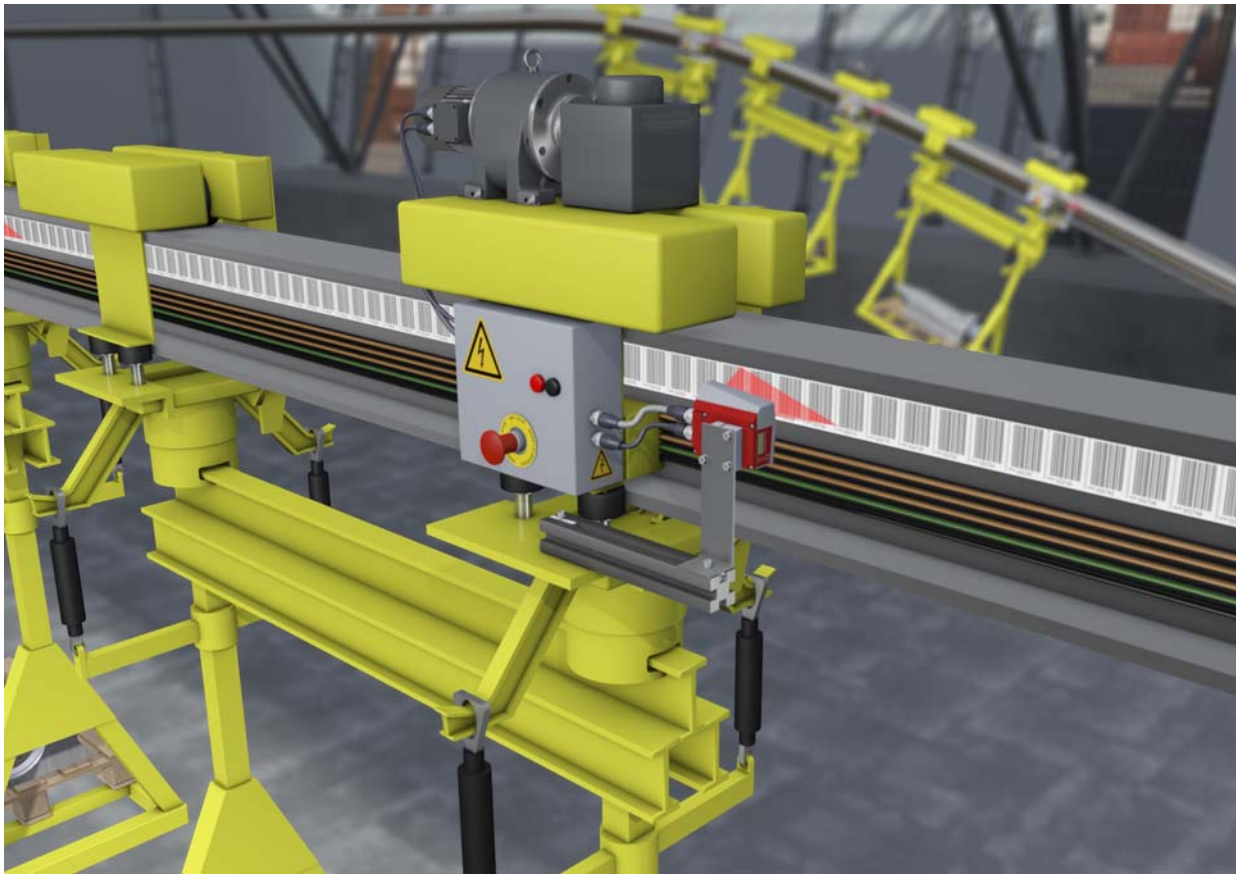

Figure 5.2: Telpher line

- The working range from 50 - 170 mm allows for flexible mounting positions and reliable position detection at varying distances
- Control codes for changing to different position values at switches

5.3 Gantry cranes

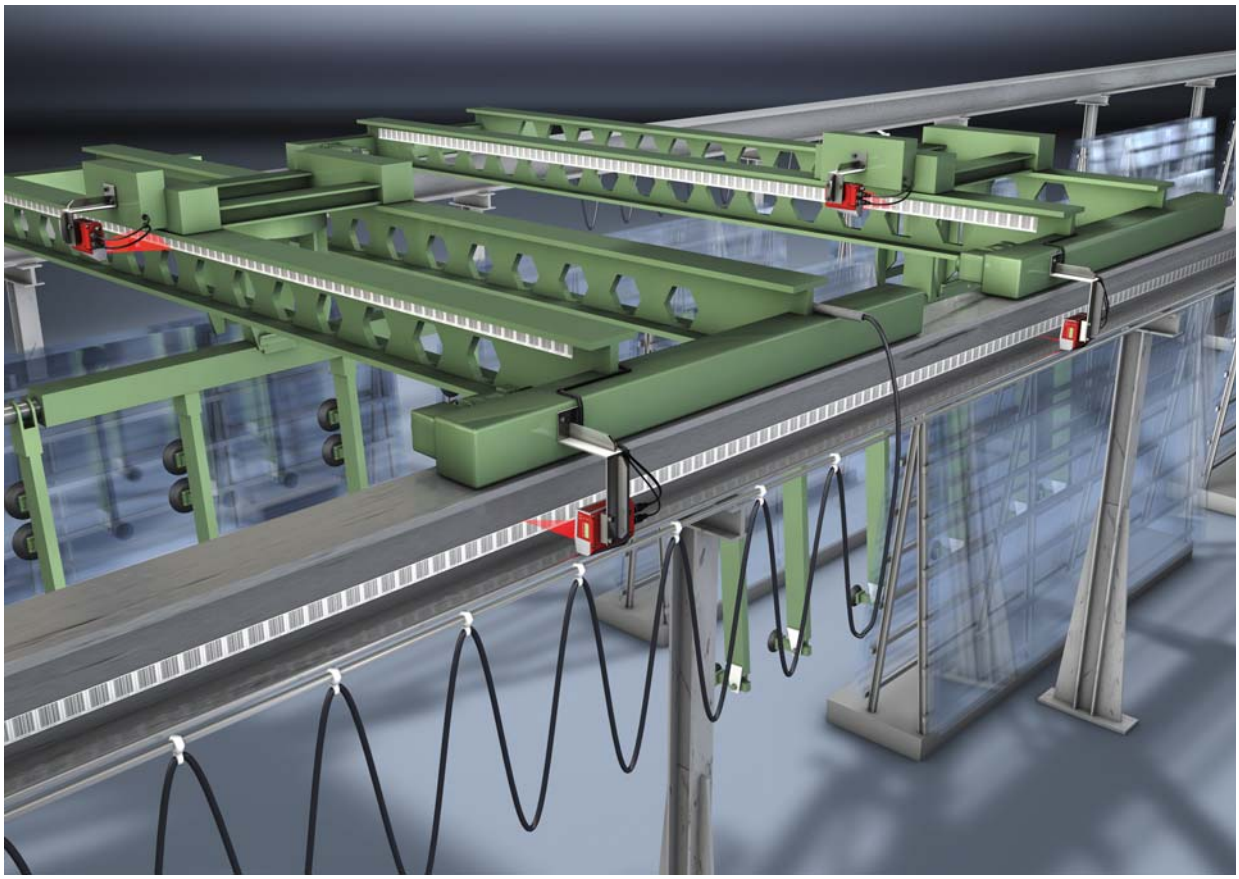

Figure 5.3: Gantry cranes

- Positioning from 0 to 10,000 meters
- Scratch- and smudge-proof, UV-resistant bar code tapes
- Synchronous positioning with twin tapes on both rails
- Mounting device for fast, precise mounting with one screw

6 Mounting and installation

6.1 Mounting bar code tape

6.1.1 Installation and application remarks

NOTICE

BCB mounting

- When processing BCBs, observe the specified processing temperatures.

  When processing BCBs in cold storage facilities, the BCB must be affixed before cooling the storage facility.

  However, if it should be necessary to affix the BCB at temperatures outside of the specified processing temperature, assure that the bonding surface as well as the BCB are at the processing temperature.
- Avoid dirt deposits on the BCB.

  If possible, affix the BCB vertically.

  If possible, affix the BCB below an overhead covering.

  The BCB must never be continuously cleaned by on-board cleaning devices such as brushes or sponges. Permanent on-board cleaning devices polish the BCB and give it a glossy finish. The reading quality deteriorates as a result.
- After affixing the BCBs, make certain that there are no polished, high-gloss surfaces in the scanning beam (e.g., glossy metal at gaps between the individual BCBs), as the measurement quality of the BPS may be impaired.

  Affix the BCBs to a diffusely reflective support, e.g., a painted surface.
- Avoid sources of extraneous light and reflections on the BCB.

  Ensure that neither strong sources of extraneous light nor reflections of the support on which the BCB is affixed occur in the vicinity of the BPS scanning beam.
- Affix the BCB over expansion joints up to a width of several millimeters.

  The BCB must not be interrupted at this location.
- Cover protruding screw heads with the BCB.
- Ensure that the BCB is affixed without tension.

  The BCB is a plastic tape that can be stretched by strong mechanical tension. Excessive mechanical stretching results in lengthening of the tape and distortion of the position values.

NOTICE

BCB application

- Make certain that the BCB is located in the scanning beam of the BPS over the entire traversing path.

  The BPS can determine the position on BCBs with arbitrary orientation.
- Bar code tapes with different value ranges may not directly follow one another.

  In the case of different value ranges, a gap of at least 1 m must be maintained between the last position bar code of the preceding BCB and the first position bar code of the subsequent BCB (see chapter 3.4.2).
- For *MVS*/*MV0* control bar codes (see chapter 3.4.2), the minimum distance of 1 m between the last position bar code before the control bar code and the first position bar code after the control bar code must be maintained.
- For bar code tapes with different value ranges, both BCBs must correspond to the BCB type configured in the BPS (see chapter 3.4.1).
- Avoid position bar code labels with the value *00000*.

  Measurements to the left of the center of a *00000* label produce negative position values that may not be displayed correctly.

6.1.2 Cutting bar code tapes

NOTICE
Avoid cutting BCB!
↳ If possible, avoid cutting bar code tapes.
Optimum position value determination by the BPS is achieved with continuously affixed BCB.
↳ If there are mechanical gaps, first affix the BCB continuously. Then cut the BCB.

The BCB is cut at the indicated cut marks; see figure 6.1.

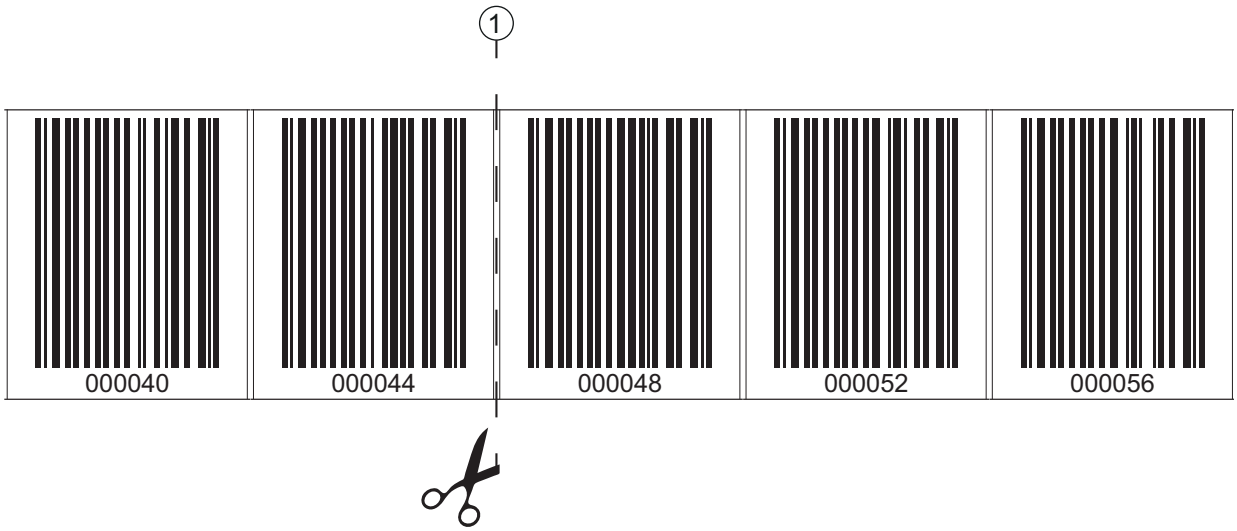

1 Cut mark

Figure 6.1: Cut mark on the bar code tape

If another BCB is to be affixed directly after the preceding BCB, the subsequent bar code value must differ from the preceding BCB by at least 1 m; see figure 6.2.

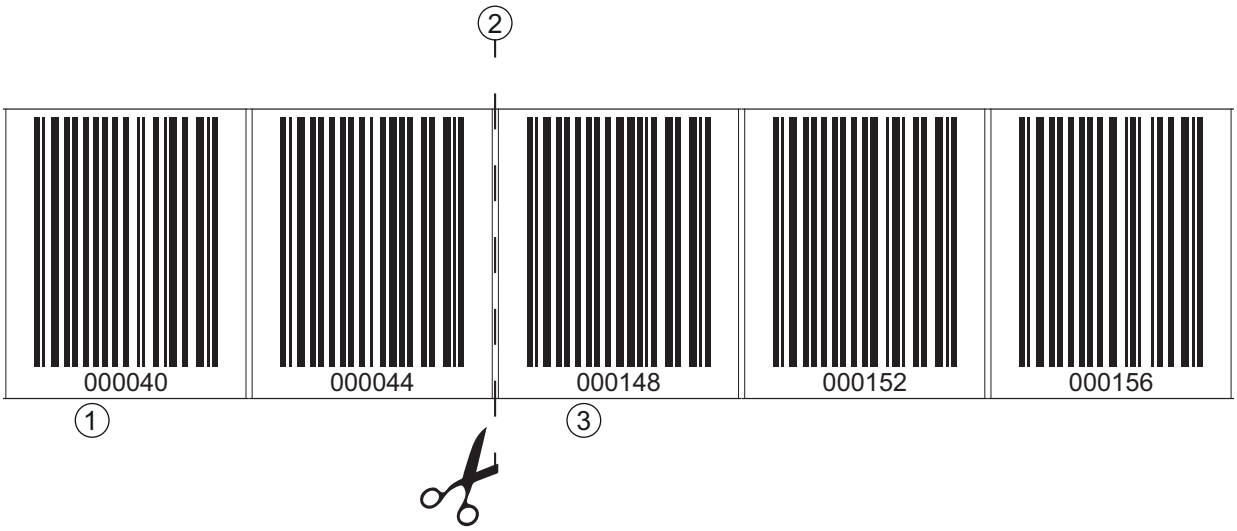

1 Preceding bar code tape
2 Cut mark
3 Subsequent bar code tape, value range + 1 m

Figure 6.2: Cut bar code tape

If there is a gap without tape after the preceding BCB, it must be at least 300 mm wide before the subsequent BCB is affixed; see figure 6.3. The first bar code value of the subsequent BCB must differ by at least 20 (200 mm) from the last bar code value of the preceding BCB.

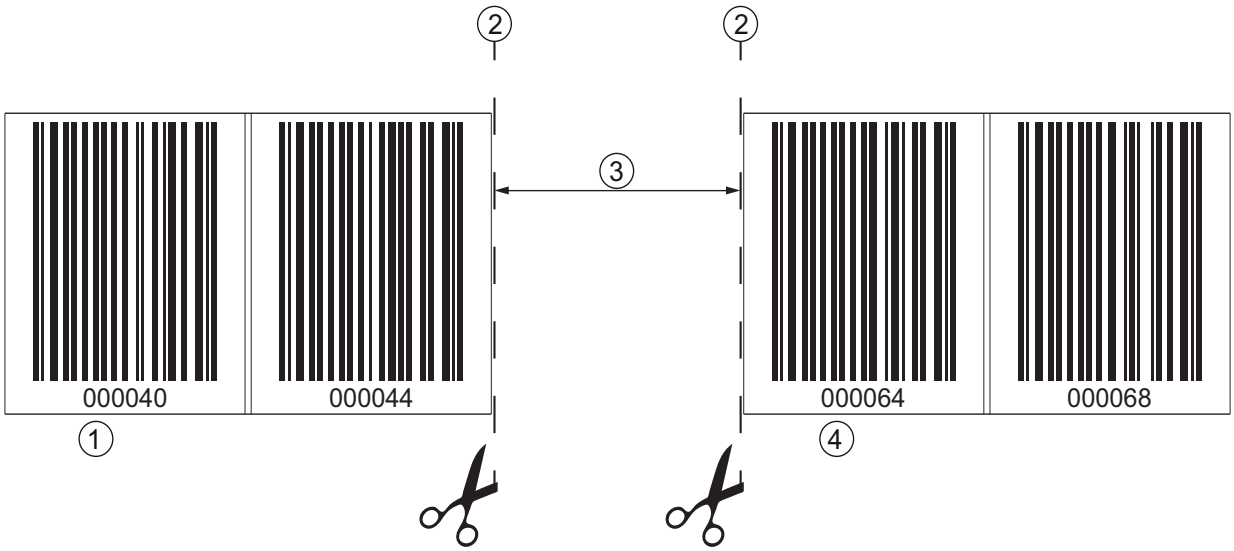

1 Preceding bar code tape
2 Cut mark
3 Gap, at least 300 mm
4 Subsequent bar code tape

Figure 6.3: Gap in cut bar code tape to avoid double positions

NOTICE
No glossy gaps in the cut bar code tape!
↳ Ensure that there are matt, bright surfaces behind the gaps in the BCB.
Polished, reflective, and high-gloss surfaces in the scanning beam may impair the measurement quality of the BPS.

6.1.3 Mounting the BCB

Mount the BCB as follows:

↳ Check the surface.

It must be flat, free of grease and dust, and be dry.

↳ Define a reference edge (e.g., metal edge of the busbar).

↳ Remove the backing and affix the BCB along the reference edge tension free.

↳ Secure the bar code tape to the mounting surface by pressing down with the palm of your hand.

When affixing, make certain that the BCB is free of folds and creases and that no air pockets form.

NOTICE
When mounting, do not pull on the BCB!
↳ The BCB is a plastic tape that can be stretched by strong mechanical tension. The stretching results in lengthening of the tape and distortion of the position values on the BCB.
While the BPS can still perform the position calculation in the event of distortions, the absolute measurement accuracy is no longer ensured in this case. If the values are taught using a teach-in process, stretching of the BCB is irrelevant.

If a bar code tape was damaged, e.g., by falling parts, you can download a repair kit for the BCB from the Internet (see chapter 11.2.2 "BCB repair with repair kit").

Use the bar code tape created with the repair kit only temporarily as an emergency solution.

BCB mounting in horizontal curves

NOTICE
Limited absolute measurement accuracy and reproducibility!
↳ BCB mounting in curves decreases the absolute measurement accuracy of the BPS, since the distance between two bar codes is no longer exactly 40 mm or 30 mm.

↳ For horizontal curves, maintain a minimum bending radius of 300 mm (see figure 6.4).

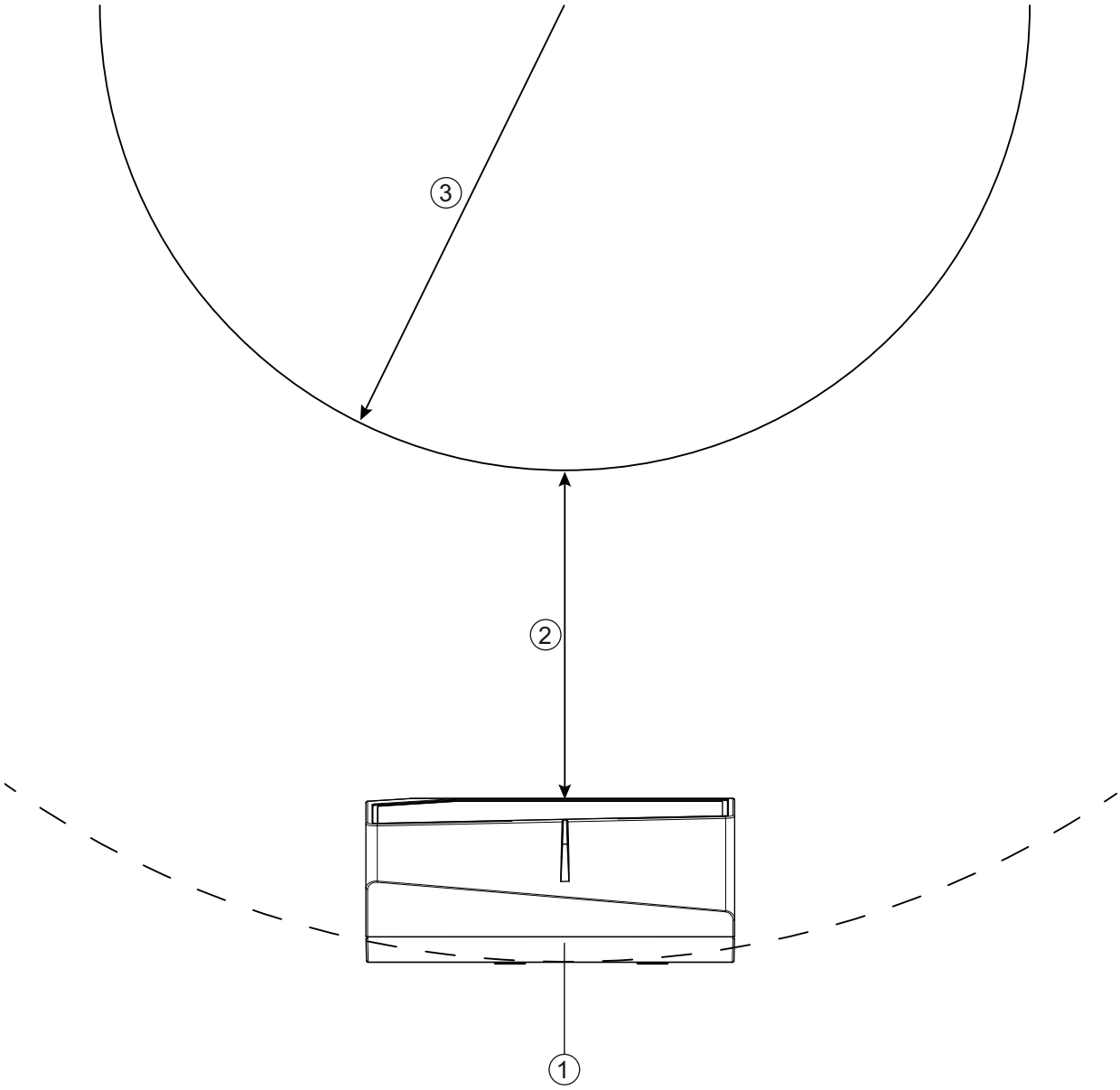

1 BPS
2 Reading distance
3 Radius of the bar code tape, R_{min} = 300 mm

Figure 6.4: Mounting the bar code tape for use in horizontal curves

BCB mounting in vertical curves

NOTICE
Limited absolute measurement accuracy and reproducibility!
↳ BCB mounting in curves decreases the absolute measurement accuracy of the BPS, since the distance between two bar codes is no longer exactly 40 mm or 30 mm.
↳ In areas where the BCB is fanned out around curves, limitations of the reproducibility must be expected.

- Only partially cut the BCB at the cut mark.
- Affix the BCB along the curve like a fan (see figure 6.5).
- Ensure that the BCB is affixed without mechanical tension.

NOTICE
No glossy gaps in the bar code tape!
Ensure that there are matt, bright surfaces behind the fanning in the BCB curves.
Polished, reflective, and high-gloss surfaces in the scanning beam may impair the measurement quality of the BPS.

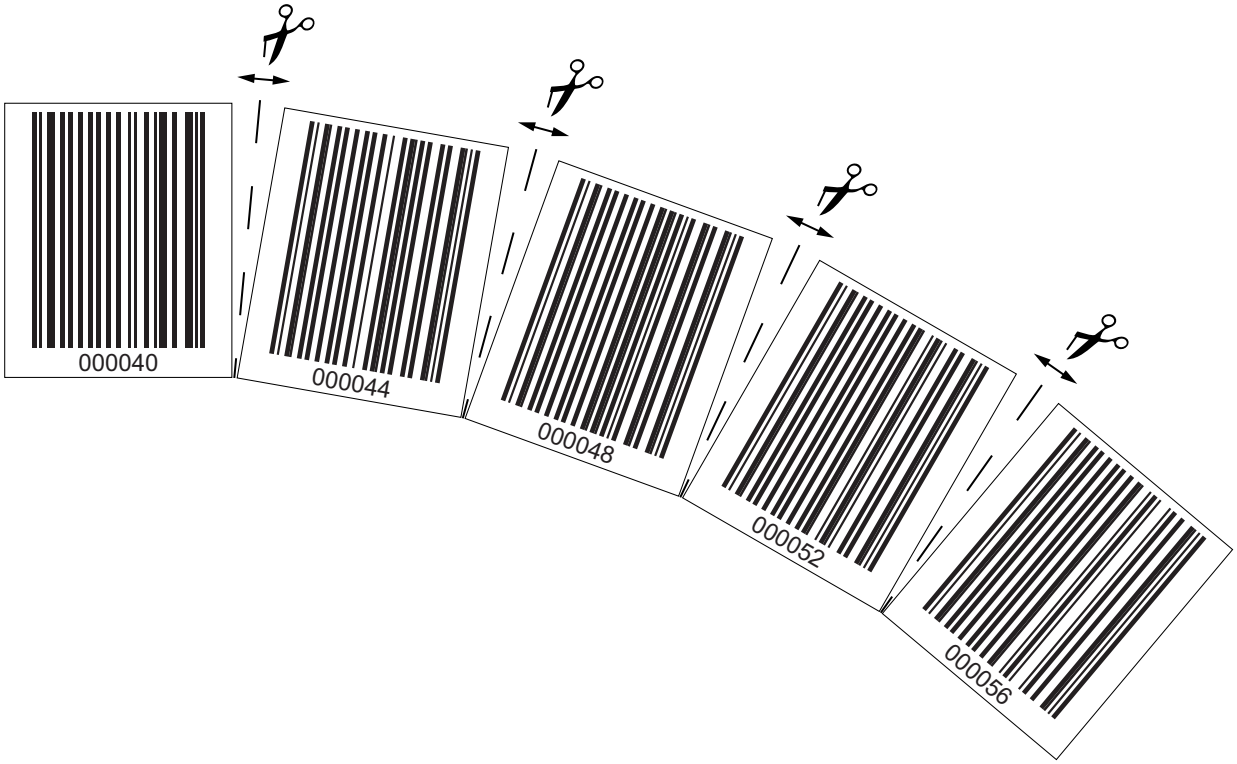

Figure 6.5: Preparing the bar code tape for use in vertical curves

Mounting twin tapes

If two bar code tapes with the same value range are used for positioning, e.g., for crane systems or elevators, the use of twin tapes is recommended (see chapter 3.4.4 "Twin tapes").

“Upside down” in order to have the same values at the same position (see figure 6.6).

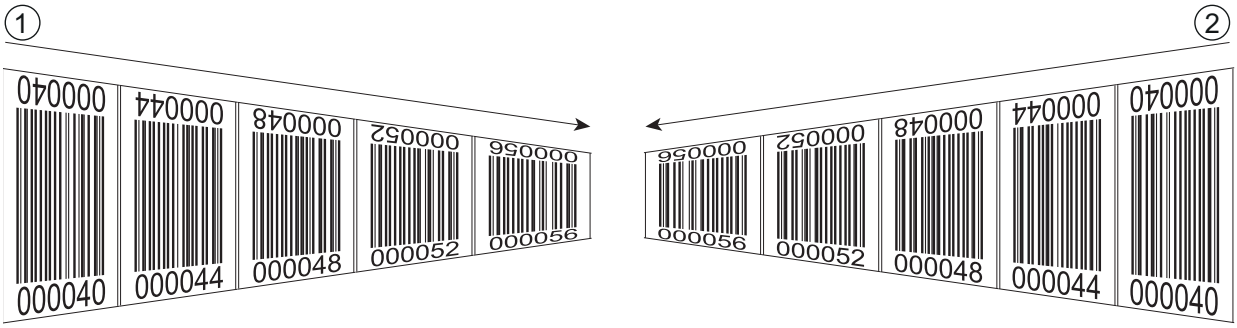

1 Twin bar code tape 1
2 Twin bar code tape 2

Figure 6.6: Mounting twin tapes

NOTICE
A twin tape always consists of two bar code tapes.
↳ When ordering twin tapes, two bar code tapes are always included with an order.
↳ Ensure that the BCB is affixed without tension.
The BCB is a plastic tape that can be stretched by strong mechanical tension. Excessive mechanical stretching results in lengthening of the tape and distortion of the position values.

Mounting two bar code tapes with the same value range

For crane systems or elevators, two bar code tapes with the same value range are used for positioning.

If two bar code tapes with the same value range are needed, the use of twin tapes is recommended (see chapter 3.4.4 "Twin tapes").

If a twin tape is not used: To have the same values at the same position, one bar code tape must be affixed with numbers upside down while the other is affixed normally (see figure 6.7).

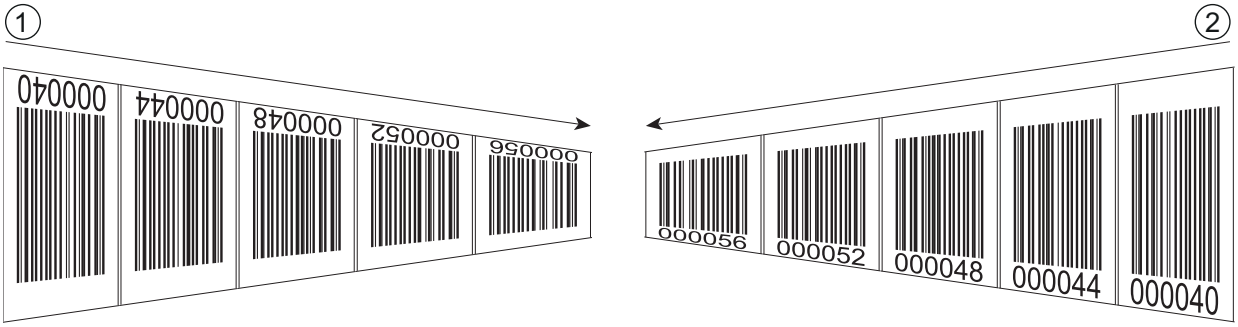

1 BCB affixed upside down
2 BCB affixed normally

Figure 6.7: Affixing two bar code tapes with the same value range

6.2 Bar code positioning system

The BPS can be mounted in the following ways:

- Mounting using a mounting device on the fastening grooves
  - BTU 0300M-W: Wall mounting
  - BT 56: Mounting on a rod
- Mounting using a mounting device on the M4 mounting threads on the rear of the device
  - BT 300 W: Mounting on a mounting bracket
  - BT 300-1: Mounting on a rod
- Mounting using four M4 mounting threads on the rear of the device

If the BTU 0300M-W mounting device is used to mount the device, the new device is automatically aligned correctly should it be necessary to exchange a device.

6.2.1 Mounting instructions

NOTICE
Select the mounting location.
↳ Make certain that the required environmental conditions (humidity, temperature) are maintained.
↳ Make certain that the distance between BPS and bar code tape is sufficiently large.
The scanning beam of the BPS should cover three or more bar codes.
The distance between BPS and bar code tape must be in the working range of the reading field curve.
↳ Make certain that the exit window does not become soiled, e.g., by leaking liquids, abrasion from cardboard packaging or residues from packaging material.
↳ Mounting the BPS outdoors or with BPS with integrated heating:
Mount the BPS in a way which provides maximum thermal isolation, e.g., using rubber-bonded metal.
Mount the BPS so that it is protected from airflow, e.g., in a protective housing.
↳ Mounting the BPS in a protective housing:
When installing the BPS in a protective housing, ensure that the scanning beam can exit the protective housing without obstruction.
↳ Make certain that the scanning range determined from the scanning curve is adhered to at all locations where a position determination is to be made.
↳ Ensure that the scanning beam is always incident on the BCB when the system is moving.
For the position calculation, the scanning beam of the BPS must be incident on the BCB without interruption.
For the best functionality, the BPS must be guided parallel to the BCB. It is not permitted to move outside of the approved working range of the BPS (50 … 170 mm) while the system is in motion.
↳ Make certain that there is only one control bar code (or marker label) in the scanning beam at a time.
The minimum distance between two control bar codes is determined by the distance between the BPS and bar code tape and the resulting length of the scanning beam.

NOTICE
For parallel mounting, maintain the minimum distance!
↳ Maintain the minimum distance of 300 mm if you mount two BPS next to or above one another.

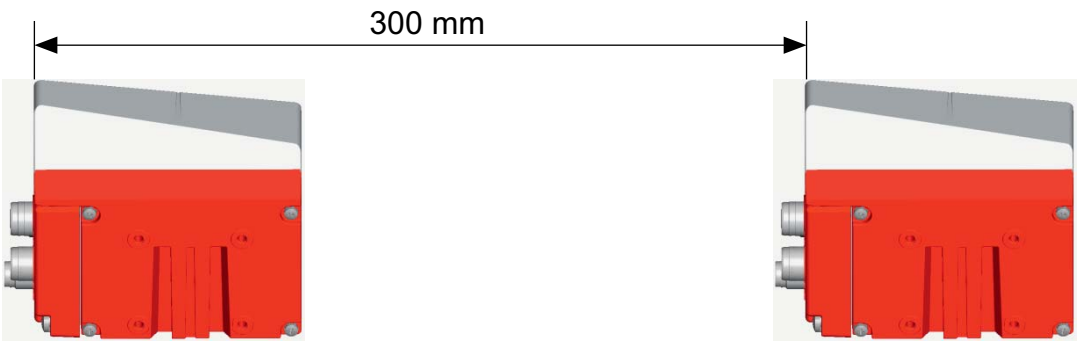

Figure 6.8: Minimum distance for parallel mounting

NOTICE
Install the connection hood before mounting the BPS!
↳ Tighten the screws on the connection hood with a tightening torque of 1.4 Nm.

6.2.2 Orientation of the BPS to the bar code tape

The beam of the BPS must be oriented at an incline of 7° to the bar code tape (see figure 6.9). When positioning, make certain that the angle of radiation to the rear side of the housing is 90 ° and the reading distance to the bar code tape is maintained.

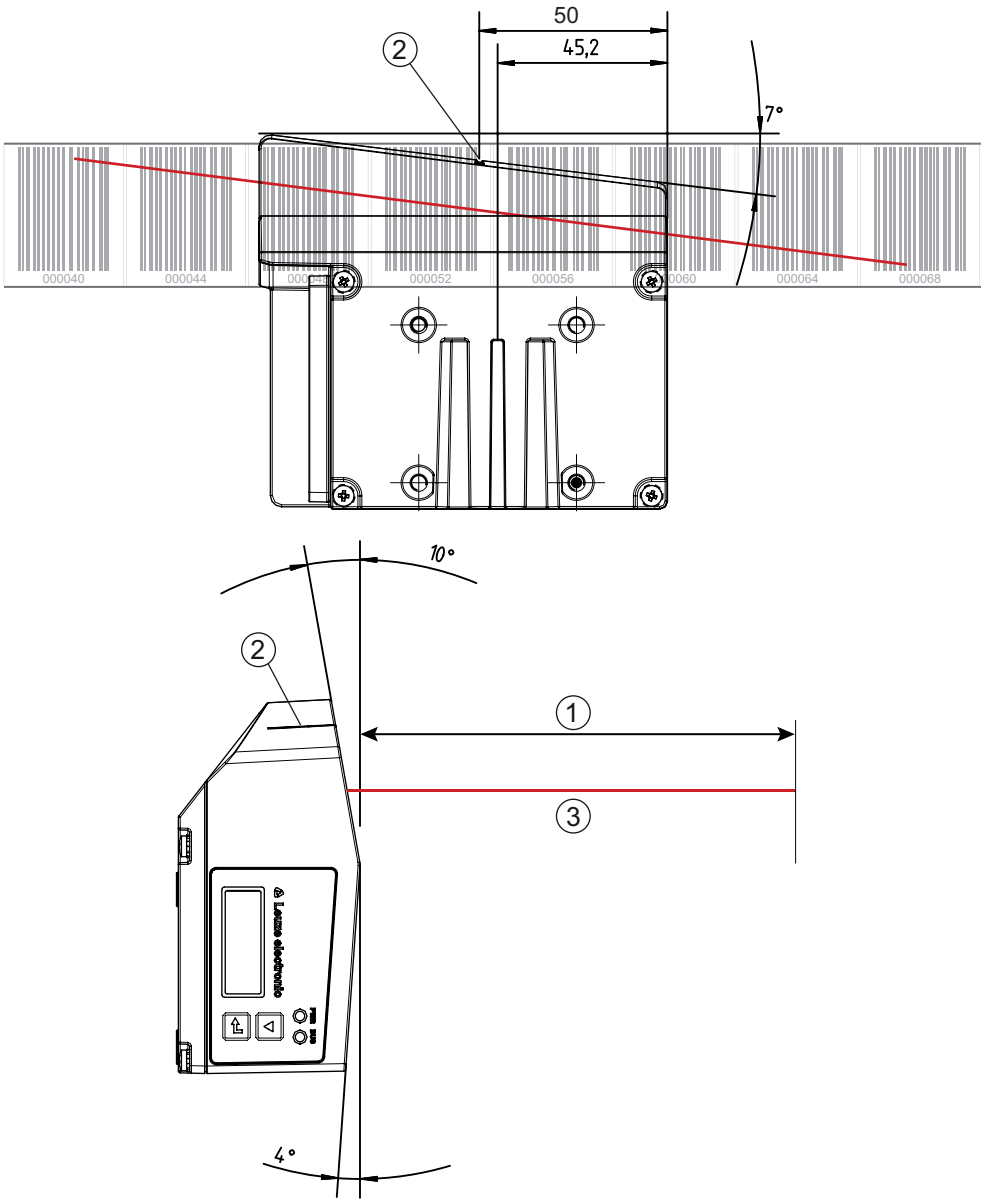

1 Reading distance
2 Reference point for the bar code position
3 Scanning beam

Figure 6.9: Beam exit

6.2.3 Mounting with the BTU 0300M-W mounting device

Mounting the BPS with a BTU 0300M-W mounting device is intended for wall mounting. For ordering information see chapter 14; for dimensioned drawing see figure 13.8.

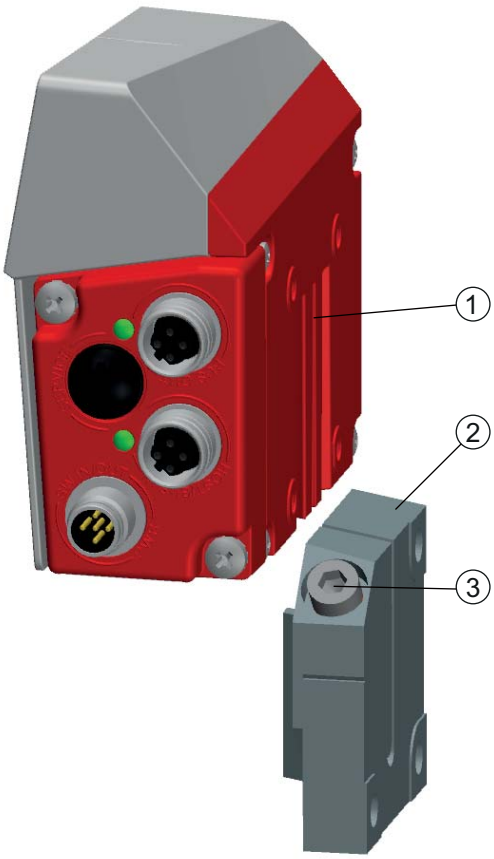

1 Clamp profile
2 Clamping jaws
3 Screw terminal

Figure 6.10: Mounting the BPS with the BTU 0300M-W mounting device

- Mount the BTU 0300M-W on the system side with M6 fastening screws (not included in delivery contents).
- Mount the BPS with the dovetail fastening grooves on the clamping jaws of the BTU 0300M-W with limit stop at end.
- Secure the BPS with the M6 screw terminal.

  Maximum tightening torque for the M6 screw terminal: 8 Nm

6.2.4 Mounting with the BT 300 W mounting bracket

Mounting of the BPS with a BT 300 W mounting bracket is intended for wall mounting. For ordering information see chapter 14; for dimensioned drawing see figure 13.9.

- Mount the BT 0300 W mounting bracket on the system side with M6 fastening screws (included in delivery contents).
- Mount the BPS on the mounting bracket with M4 fastening screws (included in delivery contents).

  Maximum tightening torque of the M4 fastening screws: 2 Nm

6.2.5 Mounting with BT 56 mounting device

Mounting of the BPS with a BT 56 mounting device is intended for rod mounting. For ordering information see chapter 14; for dimensioned drawing see figure 13.10.

- Mount the BT 56 on the rod with the clamp profile (system-side).
- Mount the BPS with its fastening grooves on the clamping jaws of the BT 56 with limit stop at end.
- Secure the BPS with the M6 screw terminal.

  Maximum tightening torque for the M6 screw terminal: 8 Nm

6.2.6 Mounting with BT 300-1 mounting device

Mounting of the BPS with a BT 300-1 mounting device is intended for rod mounting. For ordering information see chapter 14; for dimensioned drawing see figure 13.11.

- Mount the BT 300-1 mounting device with the clamp profile on the rod (system-side).
- Mount the BPS on the mounting bracket of the BT 300-1 with M4 fastening screws (included in delivery contents).

  Maximum tightening torque of the M4 fastening screws: 2 Nm

6.2.7 Mounting with M4 fastening screws

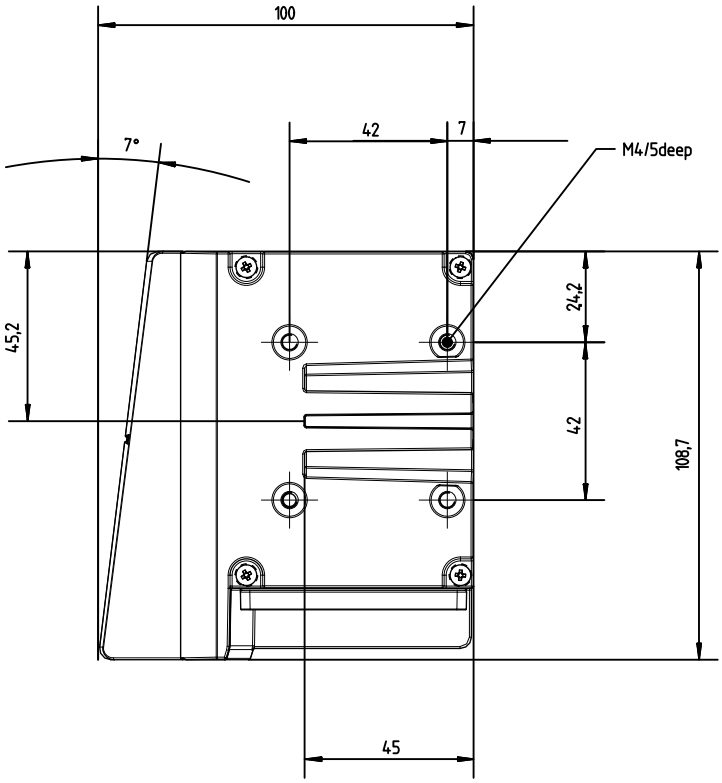

all dimensions in mm

Figure 6.11: Dimensioned drawing of rear of BPS

- Mount the BPS on the system with M4 fastening screws (not included in delivery contents).

  Maximum tightening torque of the fastening screws: 2 Nm

7 Electrical connection

CAUTION

Safety notices!

- Before connecting the device, be sure that the supply voltage agrees with the value printed on the name plate.
- Only allow competent persons to perform the electrical connection.
- Ensure that the functional earth (FE) is connected correctly.

  Fault-free operation is only guaranteed if the functional earth is connected properly.
- If faults cannot be rectified, take the device out of operation. Protect the device from accidentally being started.

CAUTION

UL applications!

- For UL applications, use is only permitted in Class 2 circuits in accordance with the NEC (National Electric Code).

NOTICE

Protective Extra Low Voltage (PELV)

- The BPS is designed in accordance with protection class III for supply with PELV (protective extra-low voltage).

NOTICE

Connection hood and degree of protection IP 65

- Before connecting, mount the connection hood on the BPS device housing.
- To ensure degree of protection IP 65 is fulfilled, the screws of the connection hood are tightened with a tightening torque of 1.4 Nm for connecting to the BPS.
- Degree of protection IP 65 is not fulfilled until connectors or cable bushings are screwed on and caps are installed.

For all connections (connection cable, interconnection cable, etc.), use only the cables listed in the accessories (see chapter 14).

7.1 External parameter memory in the connection hood

To enable simple exchange of the BPS, the integrated parameter memory of the MS 300 and MK 300 connection hoods store a copy of the current parameter set.

NOTICE

No parameter memory in the KB 301 connection hood!

- No parameter memory is integrated in connection hood KB 301.

7.2 MS 300 connection hood with connectors

The MS 300 connection hood features two M12 connector plugs and a Mini-B type USB socket as a service interface.

The integrated parameter memory for the simple replacement of the BPS is located in the MS 300.

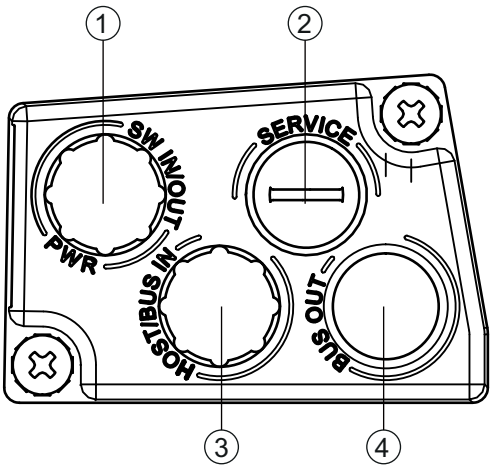

1 PWR / SW IN/OUT: M12 plug (A-coded)
2 SERVICE: Mini-B USB socket (behind protective cap)
3 HOST / BUS IN: M12 plug (B-coded), RS 232/422
4 BUS OUT: not equipped

Figure 7.1: MS 300 connection hood, connections

NOTICE
Shielding connection and functional earth connection!
↳ The shielding connection is done via the M12 connector housing.
↳ Ensure that the functional earth (FE) is connected correctly. Unimpaired operation is only guaranteed when the functional earth is connected properly. All electrical disturbances (EMC couplings) are discharged via the functional earth connection.

↳ Connect connection PWR / SW IN/OUT to the supply voltage or the switching inputs/outputs.

↳ Connect connection HOST / BUS IN to your RS 232 or RS 422 interface.

7.3 MK 300 connection hood with spring-cage terminals

With the MK 300 connection hood, the BPS is connected directly and with no additional plug.

- The MK 300 features cable bushings in which the shielding connection for the interface cable is also located.
- The integrated parameter memory for the simple replacement of the BPS is located in the MK 300.
- A Mini-B type USB socket is used for service purposes.

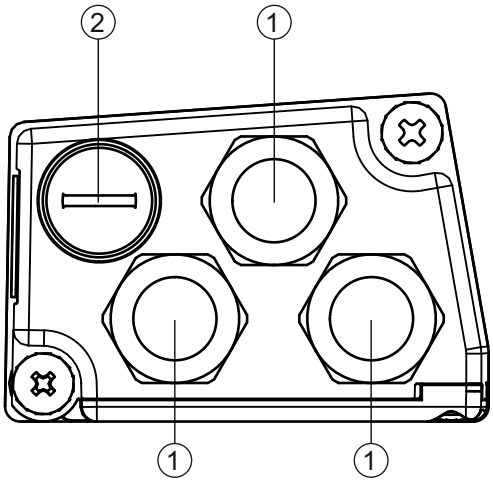

1 3x cable bushing, M16 x 1.5
2 SERVICE: Mini-B USB socket (behind protective cap)

Figure 7.2: Connection hood MK 300, connections

NOTICE
Cable fabrication!
↳ We recommend against using wire-end sleeves.

NOTICE
Functional earth connection!
↳ Ensure that the functional earth (FE) is connected correctly. Unimpaired operation is only guaranteed when the functional earth is connected properly. All electrical disturbances (EMC couplings) are discharged via the functional earth connection.

↳ Connect connection PWR / SW IN/OUT to the supply voltage or the switching inputs/outputs.

↳ Connect connection HOST / BUS IN to your RS 232 or RS 422 interface.

7.4 KB 301 connection hood with cable

Connection hood KB 301 features a connection cable and a Mini-B type USB socket as service interface.

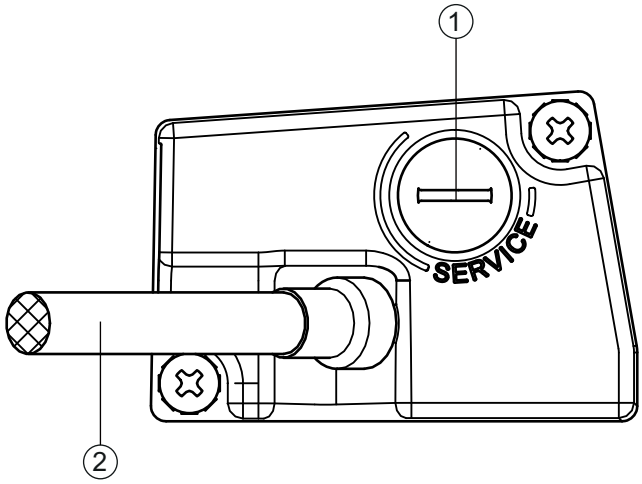

1 SERVICE: Mini-B USB socket (behind protective cap)
2 Connection cable

Figure 7.3: Connection hood KB 301-3000

↳ Remove the system plug (JST) at the end of the cable.

↳ Connect the connection cable to your interface.

7.5 Pin assignment

7.5.1 PWR / SW IN/OUT (Power and switching input/output)

5-pin, M12 plug (A-coded) or terminal block for connecting to PWR / SW IN/OUT.

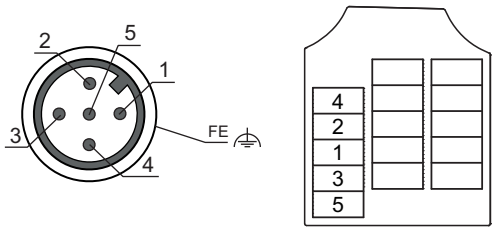

Figure 7.4: PWR / SW IN/OUT connection

Table 7.1: PWR / SW IN/OUT pin assignment

Pin/terminal	Designation	Assignment
1	VIN	+18 … +30 VDC supply voltage
2	SWIO1	Sw. input/output 1 (configurable)
3	GNDIN	Negative supply voltage (0 VDC)
4	SWIO2	Sw. input/output 2 (configurable)
5	FE	Functional earth
Thread (M12 plug) Cable gland	Functional earth	Connection cable shield. The shield of the connection cable is on the thread of the M12 plug or on the screw fitting of the cable bushing. The thread or the screw fitting is part of the metallic housing. The housing is at the potential of the functional earth via pin 5.

Connection cables: see table 14.3

CAUTION

UL applications!

- For UL applications, use is only permitted in Class 2 circuits in accordance with the NEC (National Electric Code).

Switching input/output

The BPS is equipped with two, freely programmable, optically decoupled switching inputs/outputs, SWIO1 and SWIO2.

- The switching inputs can be used to activate various internal functions of the BPS (e.g., Measurement Stop/Start, Teach Preset, Reset Preset).
- The switching outputs can be used to signal the state of the BPS and to implement external functions independent of the superior control (e.g. position value/speed value invalid, position and speed limit value exceeded, device error).
- The control can use switching inputs/outputs as digital I/Os.
  If no internal BPS function is connected to the switching inputs/outputs, the ports can be addressed as two inputs, two outputs or as one input and one output of a digital I/O component.

The function as input or output is set via the webConfig configuration tool (**CONFIGURATION > DEVICE > Switching inputs/outputs**, see chapter 9.3.2).

NOTICE

Maximum input current

- The input current of the respective switching input is maximum 8 mA.

NOTICE

Maximum loading of the switching outputs

- Do not load the respective switching output of the BPS with more than 60 mA at + 18 … 30 VDC in normal operation.
- Each configured switching output is short-circuit proof.

The two switching inputs/outputs, SWIO1 and SWIO2, are configured as follows by default:

Switching output SWIO1: Position value invalid

Switching input SWIO2: Teach Preset

NOTICE
SWIO1 and SWIO2 as switching output
↳ At the outputs of the BPS (SWIO1 and SWIO2), no switching outputs may be connected from external sensors/devices. The switching output of the BPS may otherwise malfunction.

7.5.2 RS 232/RS 422 (HOST / BUS IN)

5-pin, M12 plug (B-coded) or terminal block for connecting to an RS 232/RS 422 interface.

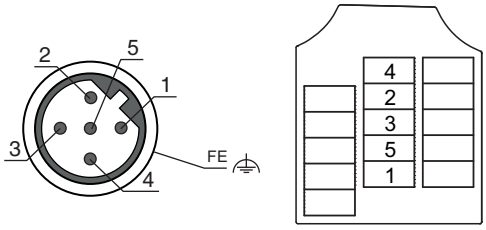

Figure 7.5: RS 232/RS 422 connection

Table 7.2: RS 232/RS 422 pin assignment (HOST / BUS IN)

Pin/terminal	Designation	Assignment
1	CTS / RX+	RS 232: CTS signal RS 422: RX+
2	TXD / TX-	RS 232: TXD signal RS 422: TX-
3	GND_ISO	RS 232: reference potential 0 V
4	RTS/TX+	RS 232: RTS signal RS 422: TX+
5	RXD/RX-	RS 232: RXD signal RS 422: RX-
Thread (M12 plug) Cable gland	Functional earth (housing)	Connection cable shield. The shield of the connection cable is on the thread of the M12 plug or on the screw fitting of the cable bushing. The thread or the screw fitting is part of the metallic housing. The housing is at the potential of the functional earth via pin 5.

NOTICE
Use ready-made connection cables!
↳ If possible, use the ready-made cables from Leuze electronic; see table 14.4. ↳ No ready-made cables are available for the connection to the RS 422 interface; see chapter "Connection cables for the RS 422 interface".

NOTICE
Self-configured cables with RS 232/RS 422 interface! ↳ Ensure adequate shielding. The entire interconnection cable must be shielded and earthed.

Connection cables for the RS 422 interface

No ready-made cables are available for the connection to the RS 422 interface.

↳ Connect a cable suitable for Interbus to the KD 02-5-BA M12 connector; see table 14.5.

Note the pin assignment for the RS 422 interface; see table 7.2.

Use only shielded cables with twisted wire pairs to prevent electromagnetic couplings (EMC).

7.5.3 KB 301 connection cable (RS 232, RS 422)

Table 7.3: KB 301 connection cable

Pin	Designation	Assignment
WH	FE	Functional earth
WH-BK	GNDIN	Negative supply voltage (0 VDC)
BK	VIN	+18 … +30 VDC supply voltage
WH-GN	SWIO2	Sw. input/output 2 (configurable)
GY	SWIO1	Sw. input/output 1 (configurable)
WH-YE	RXD/RX-	RS 232: RXD signal RS 422: RX-
WH-RD	TXD / TX-	RS 232: TXD signal RS 422: TX-
YE	CTS / RX+	RS 232: CTS signal RS 422: RX+
RD	RTS/TX+	RS 232: RTS signal RS 422: TX+
VT	GND_ISO	RS 232 reference potential 0 V
WH-BN	Reserved	---
BN	Reserved	---
WH-OG	Reserved	---
OG	Reserved	---
GN	Reserved	---
BU	Reserved	---

7.5.4 Service USB

NOTICE
Connection to PC with standard USB cable! ↳ The service USB interface of the BPS is connected to the USB interface on the PC with a standard USB cable (plug combination - Mini-B type / Type A).

5-pin, Mini-B plug for connecting to the service USB.

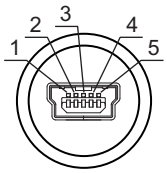

Figure 7.6: Service USB connection

Table 7.4: Service USB pin assignment

Pin	Designation	Assignment
1	VB	Sense input
2	D-	Data -
3	D+	Data +
4	ID	Not connected
5	GND	Ground

NOTICE
Use ready-made connection cables! ↳ If possible, use the ready-made cables from Leuze electronic; see table 14.6.

NOTICE
Self-configured cables! ↳ Ensure adequate shielding. The maximum cable length of 3 m must not be exceeded.

7.6 Cable lengths and shielding

Observe the maximum cable lengths and the shielding types:

Connection	Interface	Max. cable length	Shielding
BPS service	USB	3 m	Shielding absolutely necessary acc. to USB specifications
BPS host	RS 232 RS 422	10 m 1200 m (dependent on baud rate)	Shielding absolutely necessary RS 422 conductors, stranded in pairs
Switching input		10 m	Not necessary
Switching output		10 m	Not necessary
BPS power supply unit		30 m	Not necessary

8 Basic configuration

The BPS is configured only via the webConfig tool (see chapter 9).

8.1 Configuring RS 232/RS 422 interface

8.1.1 General information – RS 232/RS 422 interface

The BPS 300i features an integrated RS 232 interface and an integrated RS 422 interface. Both interfaces are contacted via the HOST / BUS_IN connection; see chapter 7.5.2 "RS 232/RS 422 (HOST / BUS IN)".

The RS 232 interface is active on delivery. Alternatively, the RS 422 interface can be activated. The currently active interface is indicated in the display.

The baud rate for serial communication is set via the webConfig tool: 4,800 … 115,200 baud.

NOTICE
Activation/deactivation/configuration of the interface with the webConfig tool!
↳ The RS 232 or RS 422 interface can only be activated, deactivated and configured via the webConfig tool; see chapter 9.3.2 "CONFIGURATION function".

Factory settings of the interface parameters

- Transmission standard: *RS 232*
  Value range: RS 232, RS 422
- Baud rate: *38,400* baud
  Value range: 4,800 … 115,200 baud
- Data format: *8N1*
  Value range: 8N1, 8E1, 8O1, 8N2
- Handshake (only for RS 232): *none*
  Value range: none, RTS/CTS
- Output cycle: *4*
  Value range: 1 … 30 ms

Setting the configuration of the interface

↳ Set the parameters for the RS 232/RS 422 interface via the webConfig tool.

CONFIGURATION > COMMUNICATION; see chapter 9.3.2 "CONFIGURATION function"

8.2 Configuring the switching inputs/outputs

↳ Set the configuration of the switching inputs/outputs via the webConfig tool.

CONFIGURATION > DEVICE; see chapter 9.3.2 "CONFIGURATION function"

8.3 Configuring the resolution for the position value

↳ Set the parameters for the resolution during position measurement via the webConfig tool.

CONFIGURATION > OUTPUT; see chapter 9.3.2 "CONFIGURATION function"

8.4 Configuring speed monitoring with switching output

↳ Set the parameters for speed monitoring via the webConfig tool.

- *Switching output* function: **CONFIGURATION > DEVICE > Switching inputs/outputs**; see chapter 9.3.2 "CONFIGURATION function"
- Speed limit values: **CONFIGURATION > DATA PROCESSING > Speed > Monitoring**; see chapter 9.3.2 "CONFIGURATION function"

8.5 Setting tape selection via the webConfig tool

↳ In the webConfig tool (**CONFIGURATION > MEASUREMENT DATA > Bar code tape**), set the *Tape selection* parameter according to the used bar code tape grid; see chapter 9.3.2 "CONFIGURATION function".

- 30 mm grid
- 40 mm grid

8.6 Operating the BPS on the fieldbus and on Ethernet

For operation on PROFIBUS, we recommend using the BPS 304i.

For operation on PROFINET, we recommend using the BPS 348i.

BPS 300i devices with RS 232 serial interface can be connected to the following fieldbuses or to Ethernet via the MA 2xxi modular connection units:

- Ethernet TCP/IP: MA 208i
- CANopen: MA 235i
- Ethercat: MA 238i
- DeviceNet: MA 255i
- EtherNet/IP: MA 258i

8.7 Communication protocol (RS binary protocol)

The RS binary protocol consists of three bytes of request telegram and seven or nine bytes of response telegram.

The communication protocol is valid for the RS 232 and RS 422 interfaces.

Request telegram

The request for transmitting the measured positions or the speed is controlled via a request telegram that is three bytes long.

The BPS processes the three bytes of the request telegram, checks the XOR link and executes the function specified in the command byte.

Table 8.1: Structure of the request telegram

Byte	Bit 7	Bit 6	Bit 5	Bit 4	Bit 3	Bit 2	Bit 1	Bit 0
0	1	1	0	0	0	0	0	0
1	CMD	CMD	CMD	CMD	CMD	CMD	CMD	CMD
2	XOR	XOR	XOR	XOR	XOR	XOR	XOR	XOR

- Byte 0
  Reserve control byte: Bit 7 and bit 6 must be set to logical 1.
- Byte 1: CMD
  Command byte = Data request to the BPS

Table 8.2: Function of the command byte (CMD)

Byte value Decimal	Byte value Hex	Function
241	0xF1	Transfer single position value
242	0xF2	Start cyclical transfer of the position value
243	0xF3	Stop cyclical transfer
244	0xF4	Start positioning
245	0xF5	Stop positioning
246	0xF6	Transfer single speed value
247	0xF7	Start cyclical transfer of the speed value
248	0xF8	Transfer single position and speed value
249	0xF9	Start cyclical transfer of position and speed value
250	0xFA	Transfer marker bar code
252	0xFC	Transfer diagnostic information
253	0xFD	Activate standby or sleep mode

webConfig can be used to configure the output cycle of the transmission from 1 … 30 ms.

The output cycle is the transmission interval during cyclical measurement value output by the BPS.

The minimum output cycle is dependent on the baud rate and the response telegram.

Example: Request of a single speed value

Table 8.3: Request of a single speed value

Byte	Bit 7	Bit 6	Bit 5	Bit 4	Bit 3	Bit 2	Bit 1	Bit 0
0	1	1	0	0	0	0	0	0
1	1	1	1	1	0	1	1	0
2	0	0	1	1	0	1	1	0

- Byte 2: XOR link of byte 0 and byte 1
  An odd number of binary 1 values – calculated column by column from top to bottom – sets the XOR bit to *1*.

The XOR checksum is entered by the sender (control) in the request protocol and checked by the receiver (BPS). A protocol is correctly transferred if the XOR checksum of the transmitter and the XOR checksum of the receiver are the same. If the XOR comparison is negative (different checksums), the protocol is not accepted by the BPS. The BPS does not send acknowledgment for an unequal checksum.

Response telegram for commands 0xF1 to 0xF7 and 0xFA to 0xFC

In the response telegram to commands 0xF1 to 0xF7 and 0xFA to 0xFC, the BPS transfers the available status information and the requested data in a seven-byte length.

For commands 0xFA to 0xFC, the response only contains three bytes of user data, i.e., byte 2 is always transferred with 0x00 and the user data is located in byte 3 to byte 5.

Data output is the same for interfaces RS 232 and RS 422.

Table 8.4: Response of the BPS

Byte	Bit 7	Bit 6	Bit 5	Bit 4	Bit 3	Bit 2	Bit 1	Bit 0
0	BCB_DIR	READY	IO2	IO1	0	0	0	0
1	TMP	QUALITY		SLEEP	MIS	DIAG	OUT	ERR
2	P31	P30	P29	P28	P27	P26	P25	P24
3	P23	P22	P21	P20	P19	P18	P17	P16
4	P15	P14	P13	P12	P11	P10	P09	P08
5	P07	P06	P05	P04	P03	P02	P01	P00
6	XOR	XOR	XOR	XOR	XOR	XOR	XOR	XOR

Response telegram for command 0xFA (transfer marker bar code)

Marker bar code: **A01**

- Data byte 2: **A** = 41(h) = 01000001(b)
- Data byte 3: **0** = 30(h) = 00110000(b)
- Data byte 4: **1** = 31(h) = 00110001(b)

Table 8.5: Response of the BPS

Byte	Bit 7	Bit 6	Bit 5	Bit 4	Bit 3	Bit 2	Bit 1	Bit 0
0	BCB_DIR	READY	IO2	IO1	0	0	0	0
1	TMP	QUALITY		SLEEP	MIS	DIAG	OUT	ERR
2	0	0	0	0	0	0	0	0
3	0	1	0	0	0	0	0	1
4	0	0	1	1	0	0	0	0
5	0	0	1	1	0	0	0	1
6	XOR	XOR	XOR	XOR	XOR	XOR	XOR	XOR

Response telegram for command 0xFC (transfer diagnostic data)

Error and diagnostic data:

- E00: no error (initial value)
- E01: error during control of measurement operation (measurement start/stop, standby)
- E02: polygon wheel motor error (motor requires too much energy)
- E03: laser error (laser current too high, critical SOS amplitude)
- E05: diagnostic data

Diagnostic data: **E05**

- Data byte 2: **E=** 45(h) = 01000101(b)
- Data byte 3: **0** = 30(h) = 00110000(b)
- Data byte 4: **5** = 35(h) = 00110101(b)

Table 8.6: Response of the BPS

Byte	Bit 7	Bit 6	Bit 5	Bit 4	Bit 3	Bit 2	Bit 1	Bit 0
0	BCB_DIR	READY	IO2	IO1	0	0	0	0
1	TMP	QUALITY		SLEEP	MIS	DIAG	OUT	ERR
2	0	0	0	0	0	0	0	0
3	0	1	0	0	0	1	0	1
4	0	0	1	1	0	0	0	0
5	0	0	1	1	0	1	0	1
6	XOR	XOR	XOR	XOR	XOR	XOR	XOR	XOR

Response telegram for commands 0xF8 and 0xF9

In the response telegram to commands 0xF8 and 0xF9, the BPS transfers the available status information and the requested data in a nine-byte length.

Data output is the same for interfaces RS 232 and RS 422.

Table 8.7: Response of the BPS

Byte	Bit 7	Bit 6	Bit 5	Bit 4	Bit 3	Bit 2	Bit 1	Bit 0
0	BCB_DIR	READY	IO2	IO1	ADR	ADR	ADR	ADR
1	TMP	QUALITY		SLEEP	MIS	DIAG	OUT	ERR
2	P31	P30	P29	P28	P27	P26	P25	P24
3	P23	P22	P21	P20	P19	P18	P17	P16
4	P15	P14	P13	P12	P11	P10	P09	P08
5	P07	P06	P05	P04	P03	P02	P01	P00
6	V15	V14	V13	V12	V11	V10	V09	V08
7	V07	V06	V05	V04	V03	V02	V01	V00
8	XOR	XOR	XOR	XOR	XOR	XOR	XOR	XOR

Status bits in the response telegram

- BCB_DIR: Tape direction, orientation of the BPS to the BCB
  0: 0°
  1: Turned 180°
- READY: Device status
  0: Not ready
  1: Ready
- IO2, IO1: Signal state of the switching input/output
  0: Signal level not active
  1: Signal level active
- TMP: Temperature warning
  0: No temperature warning
  1: Warning: Below/above specified internal device temperature
- QUALITY: Reading quality
  00: ≥ 75%
  01: 50 … 74%
  10: 25 … 49%
  11: < 25%
- SLEEP: Activation of standby or sleep mode
- MIS: Marker information in memory
- DIAG: Diagnostic data in memory
- OUT: Measurement value invalid
- ERR: Device error
- D31 … D00: Position value or speed value, D00 = LSB
- V15 … V00: Speed value, V00 = LSB
- XOR: XOR link of byte 0 to byte 1
  An odd number of binary 1 values – calculated column by column from top to bottom – sets the XOR bit to *1*.

8.8 Key factory settings of the BPS

Table 8.8: Factory settings on delivery of the BPS

Parameter	Factory setting	Explanation
Tape selection	BCB with 40 mm grid	Changeover between BCB with 30 mm grid and BCB with 40 mm grid
Position measurement	Integration depth: 8	Number of successive measurements that the BPS uses for position determination.
	Resolution: 1 mm	Resolution of the position value in mm
RS 232/RS 422 serial interface		
Transmission standard	RS 232	Active integrated interface
Baud rate	38,400 baud	Baud rate of the serial communication
Data format	8N1	Data format of the serial communication

Parameter	Factory setting	Explanation
Sw. inputs/outputs		
IO1	HIGH Function: Position value invalid	Switching output - level controlled If a valid position value cannot be ascertained, the output is set
IO2	HIGH Function: Preset teach	Switching input - edge-triggered Transition 0 → 1: Read in preset value

9 Leuze electronic webConfig tool – Extended configuration

With the Leuze electronic webConfig tool, an operating-system independent, web-technology based, graphical user interface is available for configuring the BPS.

The webConfig tool can be run on any Internet-ready PC. The webConfig tool uses HTTP as communication protocol and the client-side restriction to standard technologies (HTML, JavaScript and AJAX) that are supported by modern browsers.

The webConfig tool is offered in the following languages:

German, English, French, Italian, Spanish

9.1 Installing software

In order for the BPS to be automatically detected by the connected PC, the USB driver must be installed once on your PC. Administrator rights are required for driver installation.

If a USB driver for the webConfig tool is already installed on your computer, the USB driver does not need to be installed again.

9.1.1 System requirements

Regularly update the operating system and the Internet browser.

Install the current Windows Service Packs.

Table 9.1: webConfig system requirements

Operating system	Windows XP (Home Edition, Professional) Windows Vista Windows 7 Windows 8
Computer	PC with USB interface version 1.1 or higher
Graphics card	Min. 1024 x 768 pixels or higher resolution
Required disk space for USB driver	10 MB
Internet browser	Internet Explorer version 8.0 or higher Firefox version 4.0 or higher

9.1.2 Install USB driver

- Start your PC with administrator privileges and log on.
- Download the setup program from the Internet:

  www.leuze.com > Products > Measuring Sensors > Sensors for Positioning > BPS 300i > (Name of the BPS) > Tab Downloads > Software/driver.
- Start the setup program and follow the instructions.

Alternatively, you can manually install the **LEO_RNDIS.inf** USB driver.

Contact your network administrator if the installation fails.

9.2 Start webConfig tool

Prerequisite: The Leuze electronic USB driver for the webConfig tool is installed on the PC.

↳ Connect the operating voltage to the BPS.

↳ Connect the SERVICE USB interface of the BPS to the PC.

The connection to the SERVICE USB interface of the BPS is established via the PC-side USB interface.

Use a standard USB cable with one Type A plug and one Mini-B type plug.

↳ Start the webConfig tool using your PC's Internet browser with IP address **192.168.61.100**

This is the default Leuze electronic service address for communication with bar code positioning systems of the BPS 300i series.

The webConfig start page appears on your PC.

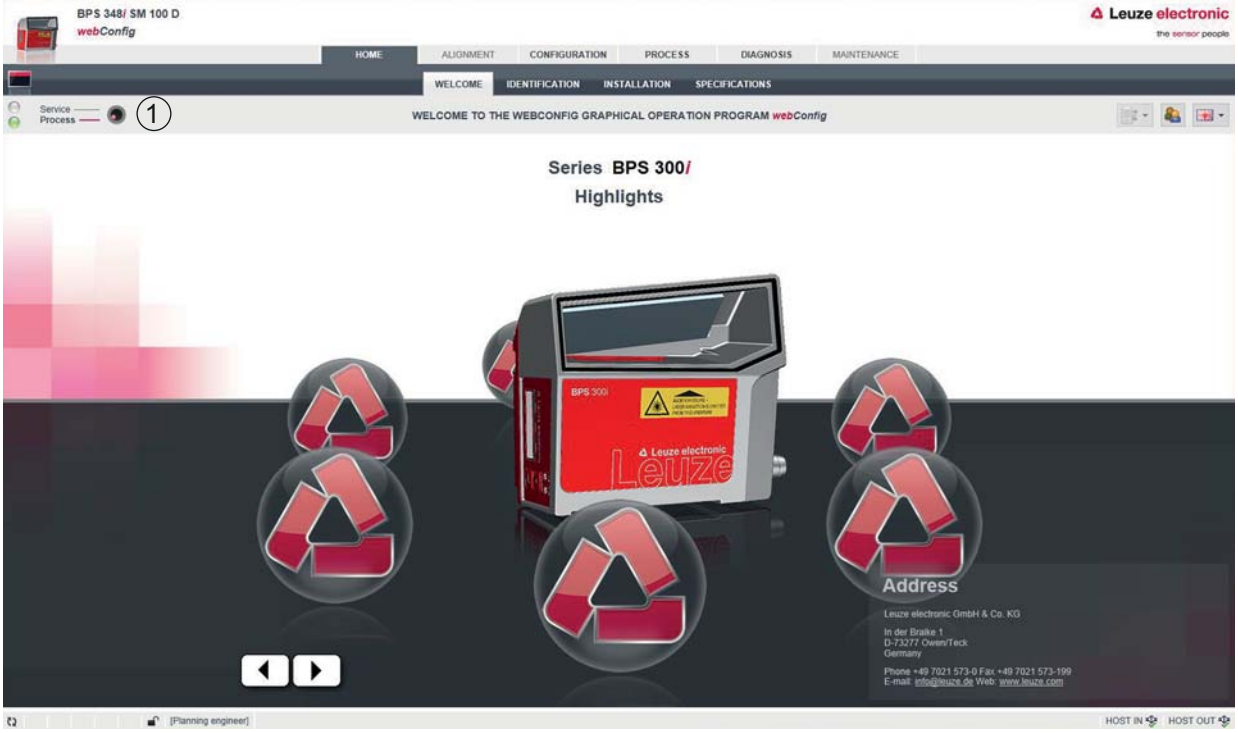

1 Changing the operating mode (*Process* - *Service*) (upper left)

Figure 9.1: The start page of the webConfig tool

The user interface of the webConfig tool is largely self-explanatory.

The webConfig tool is completely contained in the firmware of the BPS.

The pages and functions of the webConfig tool may appear and be displayed differently depending on the firmware version.

Clear browser history

The cache of the Internet browser must be deleted if different device types or devices with different firmware have been connected to the webConfig tool.

↳ Delete cookies and temporary Internet and website data from browser history before starting the webConfig tool.

Example for Internet Explorer 10:

Settings > Security > Browser History > [Delete]

Note limit of Firefox sessions for version 17.0 and higher

If the limited number of Firefox sessions is exceeded, it may no longer be possible to address the BPS via the webConfig tool.

↳ Do **not** use the refresh functions of the Internet browser:

[Shift] [F5] or [Shift] + mouse click

9.3 Short description of the webConfig tool

9.3.1 Overview

Operating modes

For configurations with the webConfig tool, you can switch between the following operating modes:

- *Process*
  The BPS is connected to the control.
  - The process communication to the control is activated.
  - The switching inputs/outputs are activated.
  - The configuration cannot be changed.
  - *PROCESS* function available.
  - *ALIGNMENT* function not available.
- *Service*
  - The process communication to the control is interrupted.
  - The switching inputs/outputs are deactivated.
  - The configuration can be changed.
  - *PROCESS* function not available.
  - *ALIGNMENT* function available.

Functions

In the *Process* operating mode, the webConfig tool has the following main menus and functions:

- *HOME*
  Information on the connected BPS as well as on installation.
  This information corresponds to the information in the current technical description.
- *CONFIGURATION* (see chapter 9.3.2)
  Information on the current BPS configuration – no change to the configuration:
  - Display of the interface parameters
  - Selection of the used bar code tape (30 mm grid or 40 mm grid)
  - Display of the tape value correction (deviation of the BCB from scaling)
  - Display of the device components (switching inputs/outputs, display)
  - Data processing (position/speed detection or monitoring, data preparation)
  - Display of the warning threshold and the error threshold for the reading quality
- *PROCESS*
  Check and save the current read data in process mode (see chapter 9.3.4).
  - Tabular display of the following values:
    Scan number, position, speed, reading quality, distance from BCB, info on the control label

In the *Service* operating mode, the webConfig tool also has the following main menus and functions:

- *CONFIGURATION* (see chapter 9.3.2)
  - Configuration of the interface parameters
  - Configuration of device components (switching inputs/outputs, display)
  - Selection of the used bar code tape
  - Configuration of the data processing (position/speed detection or monitoring, data preparation)
  - Configuration of the warning threshold and the error threshold for the reading quality
- *ALIGNMENT* (see chapter 9.3.3)
  - Display of the following values:
    Scan number, position, speed, quality, distance, number of labels in the scanning beam
  - Graphical displays of the following values:
    Position, speed, quality
- *DIAGNOSTICS* (see chapter 9.3.5)
  - Event logging of warnings and errors.
- *MAINTENANCE* (see chapter 9.3.6)
  - Firmware update

- User management
- Backup/Restore

9.3.2 *CONFIGURATION* function

NOTICE
Configuration changes only in the *Service* operating mode!
↳ Changes made using the *CONFIGURATION* function can only be performed in the *Service* operating mode.

Overview of the webConfig configuration functions

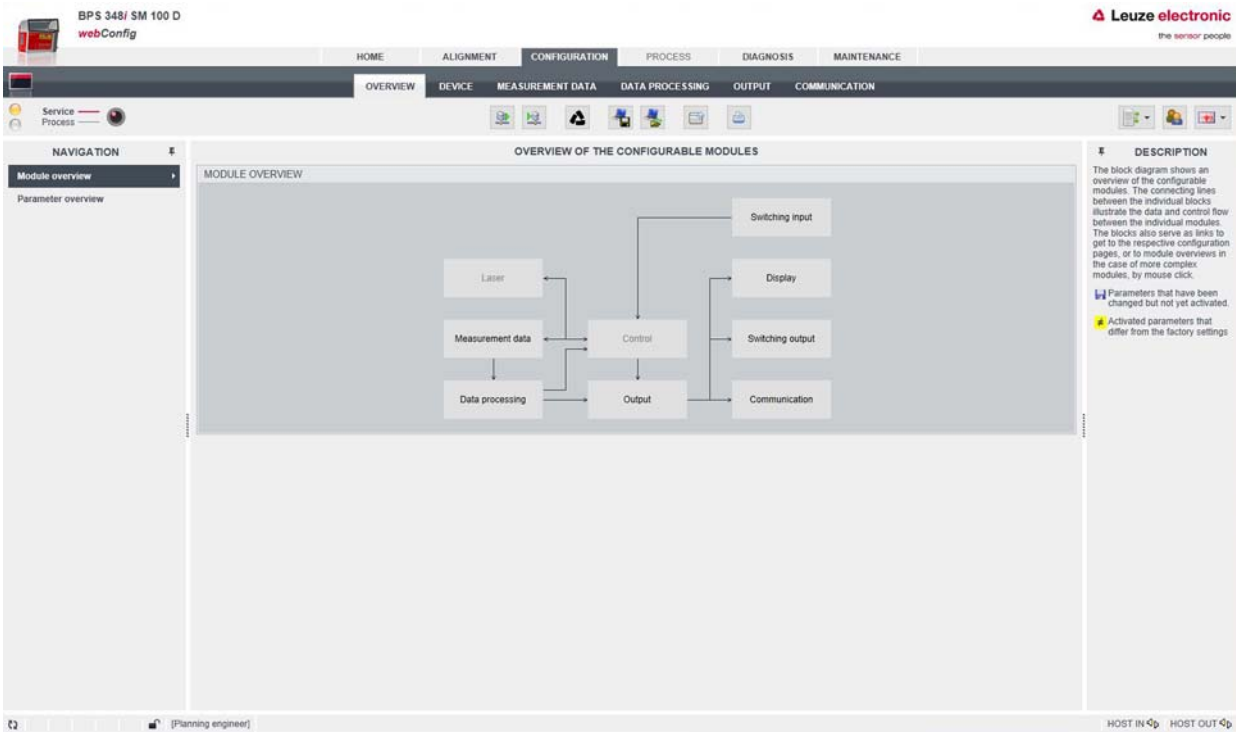

Figure 9.2: *CONFIGURATION* webConfig function

Configuration of the switching inputs/outputs (*DEVICE* tab)

- I/O mode: switching input or switching output
- Output function
- Input function
- Timing functions
  - Signal delay
  - Pulse duration
  - Switch-on/switch-off delay
  - Debounce time
  - Inversion yes/no

Configuring switching outputs

↳ Select the function symbol for activation of the switching output in the *Functions* area.

↳ Use the left mouse button to drag the function symbol into the *Activation* window.

↳ Configure the timing; see chapter "Timing functions of the switching inputs/outputs".

↳ Save the configuration of the switching outputs in the device.

Click the symbol.

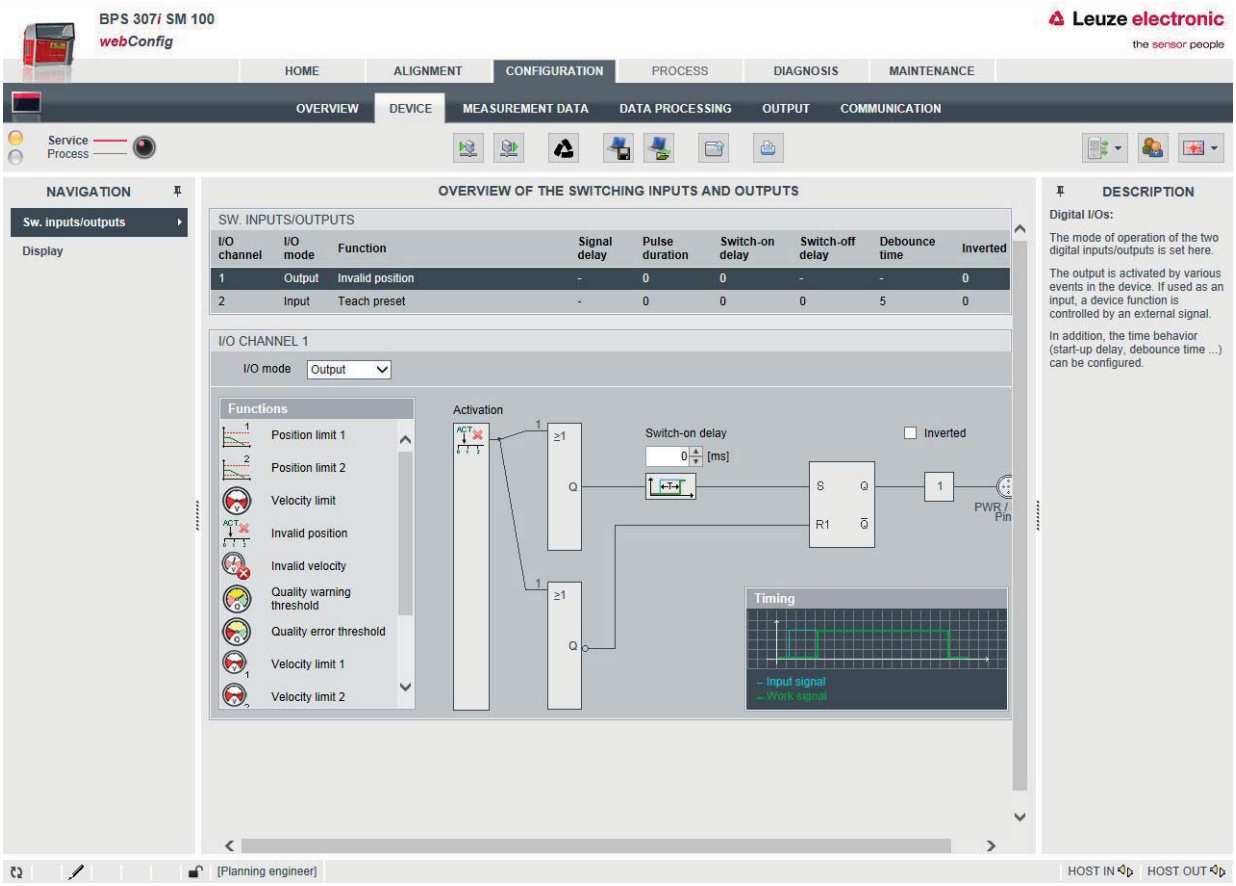

Figure 9.3: Configuration of the switching outputs

Possible signals via the switching outputs:

- Position limit 1/2
  Signals a value above/below the position limit.
- Invalid position
  Signals that no valid position can be ascertained.
- Speed limit
  Signals a value above/below the speed limit.
- Speed limit value 1-4
  Signals that speed limit value 1-4 has been exceeded or has not been met.
- Invalid speed
  Signals that no valid speed can be ascertained.
- Quality warning threshold
  Signals that the reading quality is less than the warning threshold.
- Quality error threshold
  Signals that the reading quality is less than the error threshold.
- Device error
  Signals a device error.

Configuring switching inputs

↳ Select the function of the switching input from the *Function* list:

- No function
- Start/stop measurement
- Teach preset
- Reset preset

↳ Configure the timing; see chapter "Timing functions of the switching inputs/outputs".

↳ Save the configuration of the switching inputs in the device.

Click the symbol.

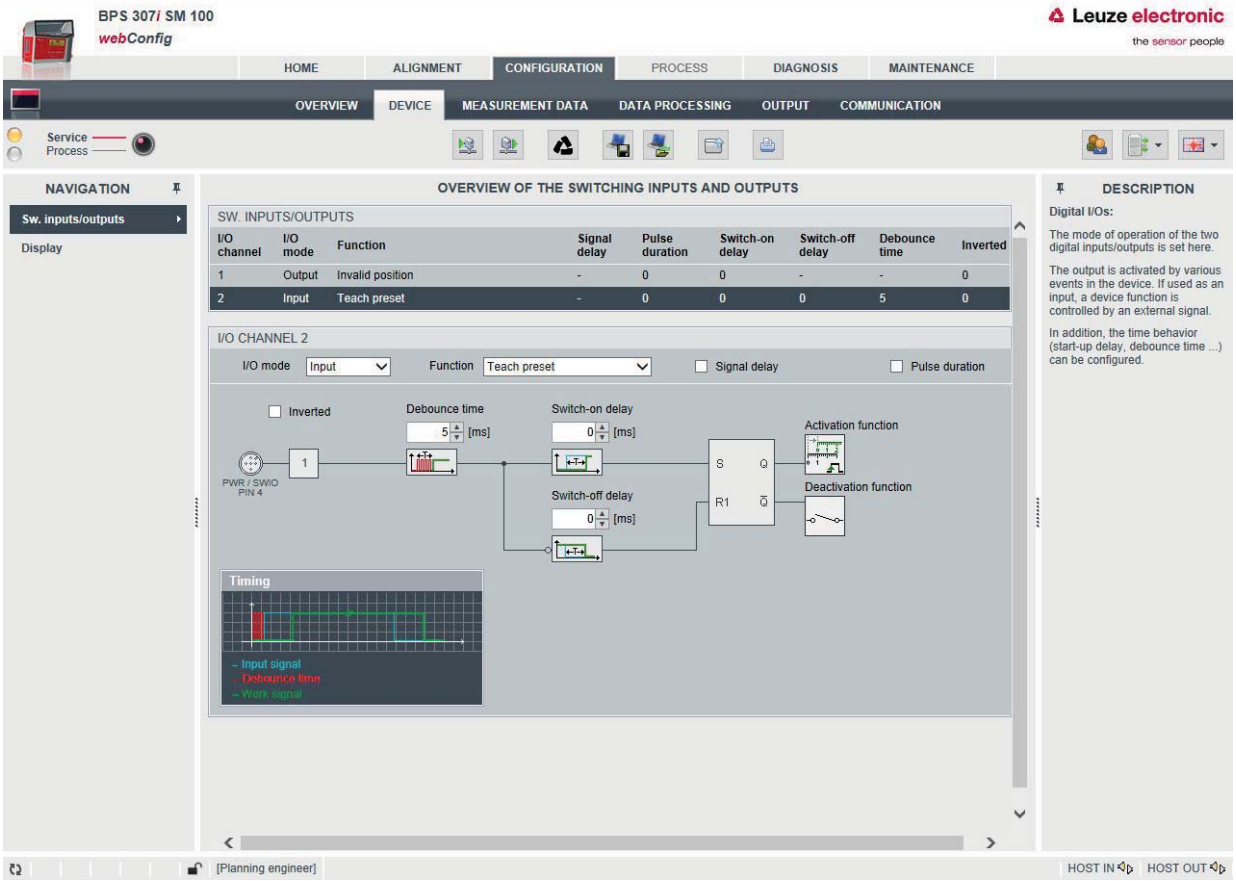

Figure 9.4: Configuration of the switching inputs

Timing functions of the switching inputs/outputs

The timing functions (e.g., start-up delay) can **only** be configured with the webConfig tool.

- Start-up delay
  With this setting, the output pulse is delayed by the specified time (in ms).
- Switch-on time
  Defines the switch-on time period for the switching input. Any activated switch-off function then no longer has any function.
  If the output is deactivated via the switch-off signal before the start-up delay lapses, only a brief pulse appears at the output following the start-up delay.
- Debounce time
  Parameter for setting the software debounce time for the switching input. The definition of a debounce time extends the signal transition time accordingly.
  If this parameter has the value *0*, no debouncing takes place. Otherwise, the set value corresponds to the time (in ms) that the input signal must be present and stable.
- Switch-off delay
  This parameter specifies the duration of the switch-off delay (in ms).

Configuration of the bar code tape selection and tape value correction (*MEASUREMENT DATA* tab, *Bar code tape*)

- Bar code tape with 30 mm grid or 40 mm grid
- Tape value correction
  With this parameter, the deviation of the BCB from the correct millimeter scaling that arises from the production process can be corrected.

Configuration of position detection (*DATA PROCESSING* tab, *Position > Detection*)

- Integration depth
  Number of successive measurements that the BPS uses for position determination.
- Scaling free resolution
  Free scaling of the output of the position values.
- Preset
  A preset position value (preset value) is activated at an appropriate position.
- Offset
  Output value=measurement value+offset
  If a preset is active, this has priority over the offset.
- Error handling procedures
  Parameters for the position value in case of failure.

Configuration of position monitoring (*DATA PROCESSING*tab, *Position > Monitoring*)

- Position limit value 1/2
  Signals that the position value is outside of the configured limit value range.

Configuration of speed detection (*DATA PROCESSING* tab, *Speed > Detection*)

- Speed measurement averaging
  Measurement value preparation averages all speed values calculated during the selected period (averaging) to yield a speed output value.
- Scaling free resolution
  Free scaling of the output of the speed values.
- Error handling procedures
  Parameters for the speed value in case of failure.

Configuration of speed monitoring (*DATA PROCESSING* tab, *Measurement data > Speed > Monitoring*)

- Speed limit value 1-4
  Signals that the speed is outside of the configured limit value range.

Configuration of the measurement value display (*DATA PROCESSING* tab, *General preparation*)

Unit of measurement: metric or inch

- Counting direction
  Count direction for position calculation or sign for speed calculation.
- Output mode sign
  Output mode of the sign. Affects position value and speed output.

Configuration of monitoring of the reading quality (*DATA PROCESSING* tab, *Reading quality*)

- Warning threshold for reading quality in %
- Error threshold for reading quality in %

Configuration of the communication data (*COMMUNICATION* tab)

- Configuration of the SERVICE USB interface
- Setting the process interface
  - Transmission standard of the interface: RS 232, RS 422
  - Baud rate: 4,800 baud … 115,200 baud
  - Data format: 8N1, 8E1, 8O1, 8N2
  - Handshake: none, RTS/CTS
  - Output cycle: 1 … 30 ms
    The parameter output cycle is valid only with cyclical transmission of the position values selected. Cyclical transmission is selected via the protocol.

9.3.3 *ALIGNMENT* function

NOTICE
***ALIGNMENT* function only in the *Service* operating mode!**
↳ The BPS can only be aligned using the *ALIGNMENT* function in the *Service* operating mode.

The *ALIGNMENT* function serves to simplify mounting and alignment of the BPS. The laser is to be activated via the **Start** icon so that the function can monitor and directly display the measurement values for position and speed and determine the optimum installation location.
In addition, reading quality (in %), working distance and the number of labels in the scanning beam can be displayed. Using this information, it is possible to assess how well the BPS is aligned with the BCB.

During output of the read results, the BPS is controlled by the webConfig tool.

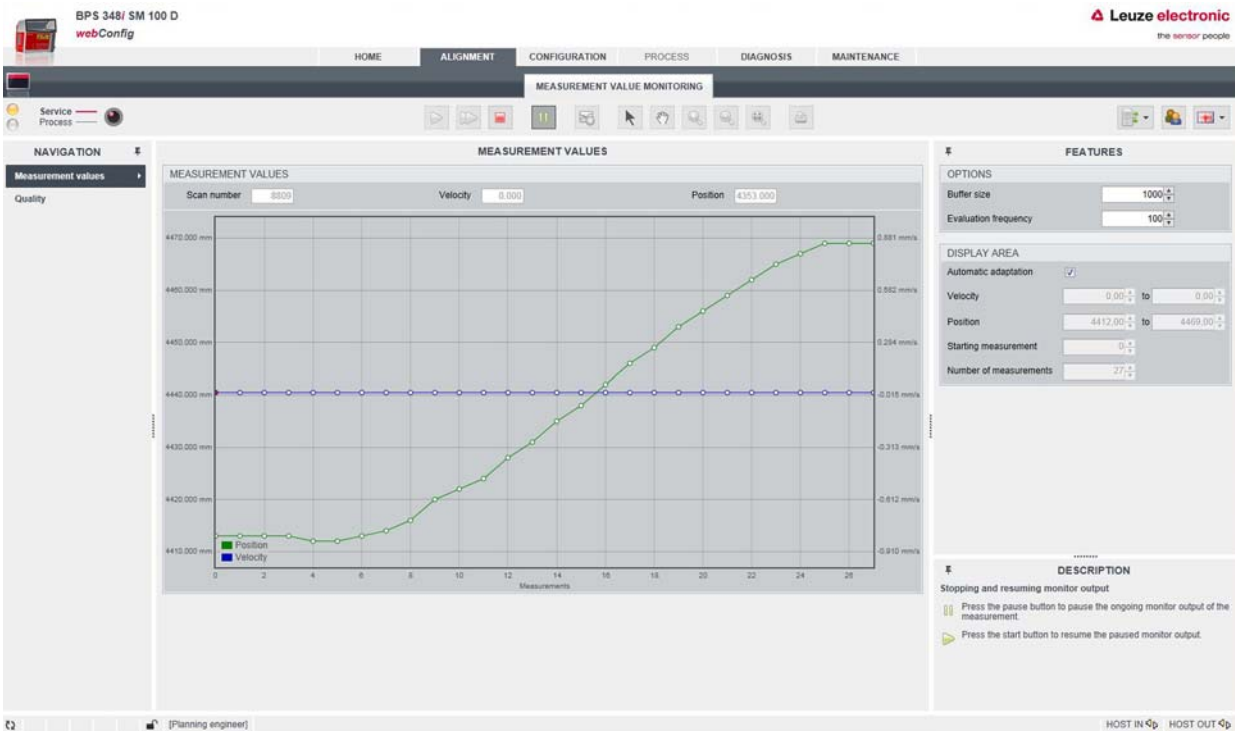

Figure 9.5: *ALIGNMENT* webConfig function

9.3.4 *PROCESS* function

The *PROCESS* function serves to control the current measurement data in the *Process* operating mode.
The measurement results are output in tabular form – strictly as monitor output.
The **Pause/Start** icon can be used to interrupt and resume monitor recording.

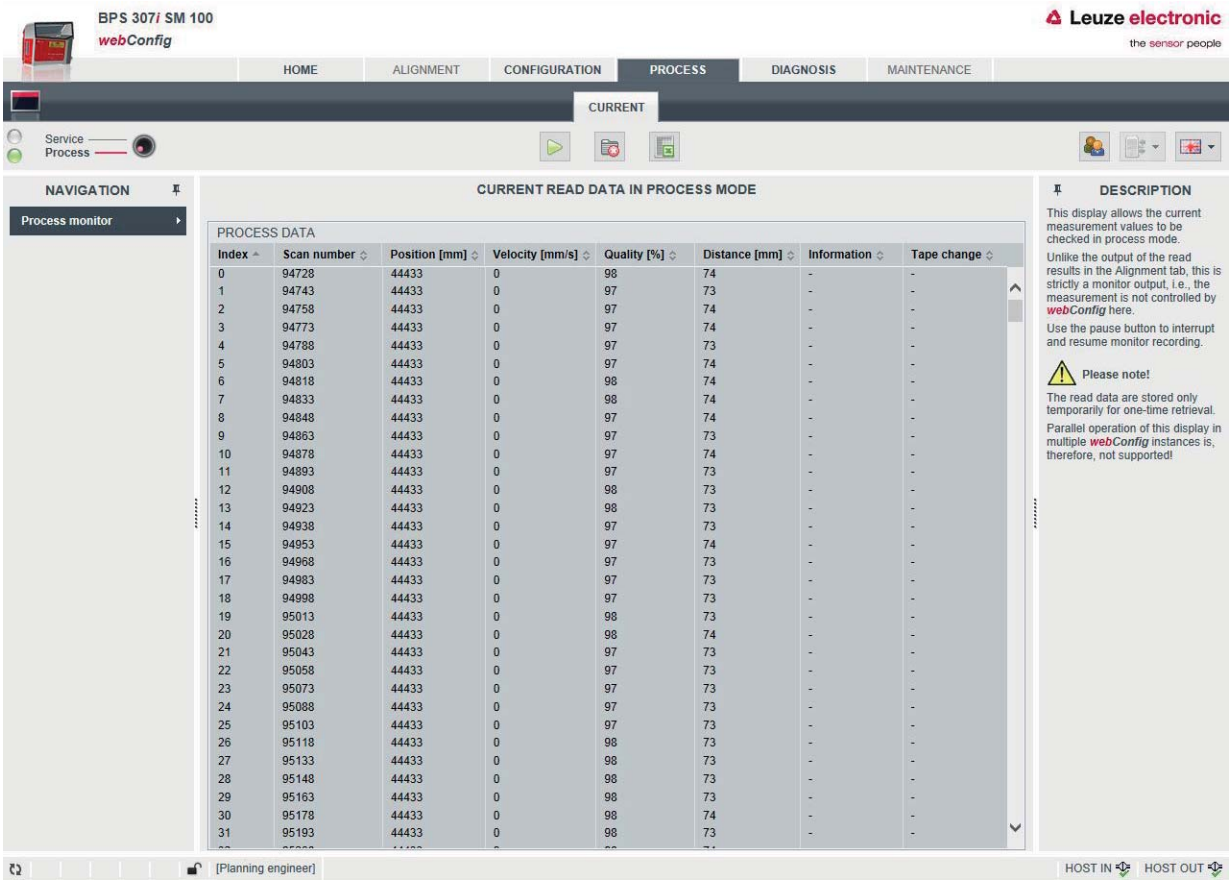

Figure 9.6: *PROCESS* webConfig function

9.3.5 *DIAGNOSTICS* function

The *DIAGNOSTICS* function is available in the *Process* and *Service* operating modes.
The device event log is displayed with the *DIAGNOSTICS* function.

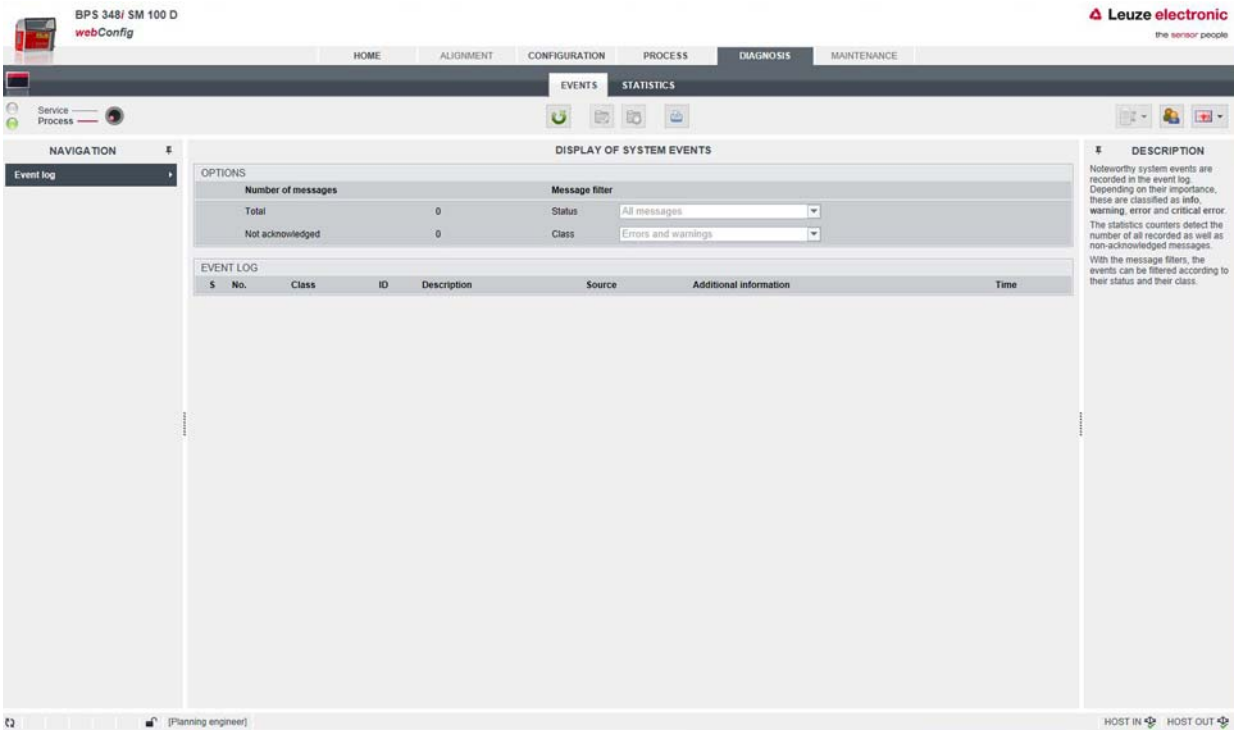

Figure 9.7: *DIAGNOSTICS* webConfig function

9.3.6 *MAINTENANCE* function

The *MAINTENANCE* function is only available in the *Service* operating mode.

Functionalities:

- User management
- Devices Backup/Restore
- Firmware update
- System clock
- Settings of the user interface

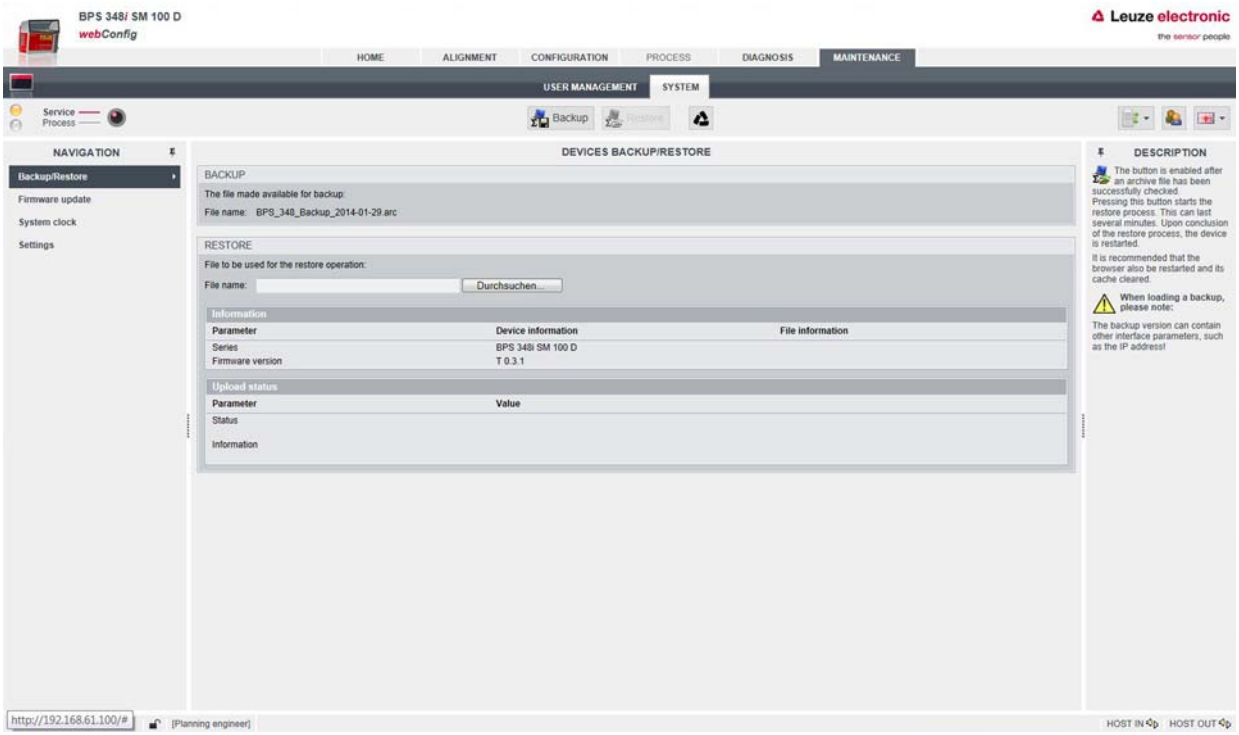

Figure 9.8: *MAINTENANCE* webConfig function

10 Diagnostics and troubleshooting

10.1 What to do in case of failure?

After switching on the BPS, display elements (see chapter 3.3) assist in checking the proper function and troubleshooting.

In case of error, you can determine the error from the LED displays. With the error message you can determine the cause of the error and initiate measures to rectify it.

- Switch off the system and leave it switched off.
- Analyze the cause of the error using the operation indicators, the error messages and the diagnostic tools (also with the help of the webConfig tool, *DIAGNOSTICS* tab) and rectify the error.

NOTICE
Contact Leuze electronic subsidiary/customer service.
If you are unable to rectify a fault, contact the Leuze electronic branch responsible for you or call the Leuze electronic customer service (see chapter 12 "Service and support").

10.1.1 Diagnostics with webConfig tool

System events are displayed in the webConfig tool via the *DIAGNOSTICS* tab. Noteworthy system events are recorded in the event log. Depending on their importance, the events are classified as info, warning, error and critical error. The statistics counters detect the number of all recorded as well as non-acknowledged messages. With the message filters, the events can be filtered according to their status and their class.

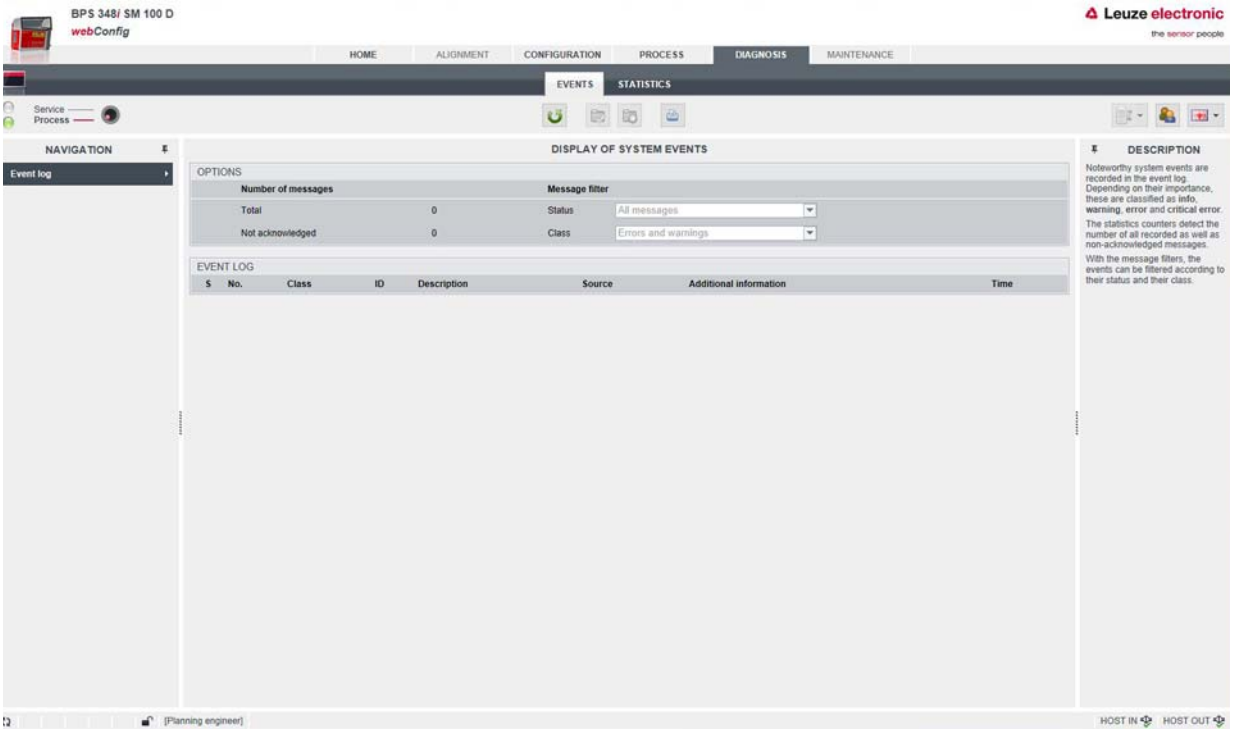

Figure 10.1: *DIAGNOSTICS* webConfig function

10.2 Operating indicators of the LEDs

You can ascertain general causes of errors via the PWR and BUS status LEDs (see table 10.4).

Table 10.1: PWR LED displays – causes and measures

Error	Possible cause	Measures
Off	• No supply voltage connected to the device • Hardware error	• Check supply voltage • Contact Leuze electronic customer service (see chapter 12 "Service and support")
Red, flashing	• No bar code in the scanning beam • No valid measurement value	• Query BCB diagnostic data and carry out the resulting measures (see table 10.5)
Orange, continuous light	• Device in *Service* mode	• Reset the device to *Process* mode using the webConfig tool

10.3 Error messages on the display

Via the optional display of the BPS, the device outputs the following possible error status information while it has the *BPS Info* device status:

- *System OK*
  BPS operating error-free.
- *Warning*
- *Error*
  Device function is not ensured.

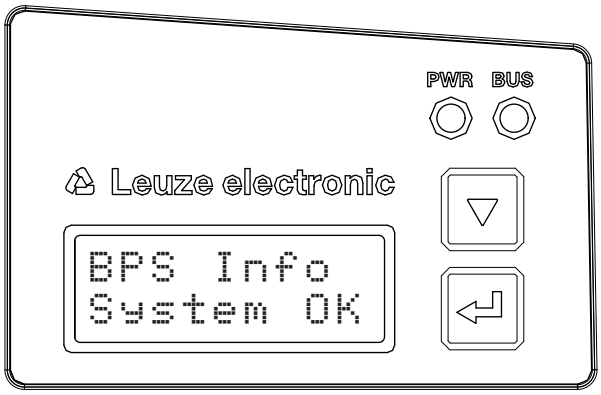

Figure 10.2: Example: Device status/error status information on the display

10.4 Checklist for causes of errors

Table 10.2: Service interface errors – causes and measures

Error	Possible cause	Measures
webConfig does not start	• Incorrectly connected interconnection cable • Connected BPS is not recognized • No communication via USB service interface • Old webConfig configuration in the browser cache	• Check interconnection cable • Install USB driver • Clear browser history

Table 10.3: Process interface errors – causes and measures

Error	Possible cause	Measures
Sporadic interface error	• Check wiring for proper contacting	Check wiring: • Check wire shielding • Check wires used
	• EMC coupling	• Observe contact quality of screwed or soldered contacts in the wiring • Avoid EMC coupling caused by power cables laid parallel to device lines • Separate laying of power and data communications cables
	• Maximum cable length exceeded	• Check cable lengths according to the data rate

Table 10.4: LED indicators - interface errors – causes and measures

Error	Possible cause	Measures
BUS LED “Off”	• No supply voltage connected to the device	• Check supply voltage
	• Hardware error	• Send device to customer service
BUS LED “red flashing”	• Incorrect wiring	• Check wiring
	• Communication error	• Check interface parameters • Carry out a reset on the control
	• Different protocol settings	• Check protocol settings

Table 10.5: Position measurement errors – causes and measures

Error	Possible cause	Measures
Measurement value or reading quality is continuously instable	• Soiling of the BPS optics	• Clean the optics of the BPS
Measurement value or reading quality is poor • at certain position values • always at the same position values	• Soiling of the bar code tape	• Clean the bar code tape • Replace the bar code tape
No measurement value can be determined	• No code in scanning beam • Code not in the working range of the BPS	• Align the scanning beam with the bar code tape • Align the BPS with the bar code tape (working range 50 mm … 170 mm)
Faulty measurement value	• Wrong bar code tape BCB grid different from BPS configuration	• Change BPS configuration to the bar code tape that is being used

11 Care, maintenance and disposal

11.1 Cleaning

If there is dust on the BPS device:

↳ Clean the BPS device with a soft cloth; use a cleaning agent (commercially available glass cleaner) if necessary.

NOTICE
Do not use aggressive cleaning agents!
↳ Do not use aggressive cleaning agents such as thinner or acetone for cleaning the BPS device. Use of improper cleaning agents can damage the lens cover.

11.2 Servicing

The BPS does not normally require any maintenance by the operator.

Repairs to the device must only be carried out by the manufacturer.

↳ For repairs, contact your responsible Leuze electronic subsidiary or Leuze electronic customer service (see chapter 12 "Service and support").

11.2.1 Firmware update

A firmware update can only be performed by Leuze electronic Service on-site or at the company headquarters.

↳ For firmware updates, contact your responsible Leuze electronic subsidiary or Leuze electronic customer service (see chapter 12).

11.2.2 BCB repair with repair kit

NOTICE
Do not use the BCB repair kit on a permanent basis!
↳ Use the bar code tape created with the repair kit only temporarily as an emergency solution. The optical and mechanical properties of the self-printed bar code tape do not correspond to those of the original bar code tape. Self-printed bar code tape should not remain in the system on a permanent basis. ↳ Repair bar code tapes in lengths of 1 m can be ordered from **Leuze electronic** on request.

If a bar code tape was damaged, e.g., by falling parts, you can download a repair kit for the BCB from the Internet.

www.leuze.com > Products > Measuring Sensors > Sensors for Positioning > BPS 300i > (Name of the BPS) > Tab Downloads > Repair kit.

In the repair kit files, you will find all position values with 30 mm grid and 40 mm grid.

Layout:

- BCB8: 0.9 m of bar code tape is provided on each A4 sheet.
  Five lines of 18 cm with six code-information segments of 30 mm each
  Tape lengths: 0 … 500 m, 500 … 1000 m, 1000 … 1500 m … 2500 … 3000 m
- BCB: 1 m of bar code tape is provided on each A4 sheet.
  Five lines of 20 cm with five code-information sections of 40 mm each
  Tape lengths: 0 … 500 m, 500 … 1000 m, 1000 … 1500 m and 1500 … 2000 m

Replacing a section of defective bar code tape

↳ Determine the coding of the defective area.

↳ Print out the coding for the given area.

↳ Affix the printed code over the defective section of bar code tape.

NOTICE
Printing coding
↳ Select only those pages that are actually required.
↳ Change the printer settings so that the bar code is not distorted.
↳ Check the print results and measure the distance between two bar codes (see figure 11.1 and see figure 11.2): BCB: 40 mm BCB8: 30 mm
↳ Cut the code strips and arrange them next to one another. The code content must always increase or decrease in increments of 30 mm or 40 mm. Check that the printed values increase by 3 or 4.

Figure 11.1: Checking the print results of the BCB repair kit (40 mm grid)

Figure 11.2: Checking the print results of the BCB8 repair kit (30 mm grid)

11.3 Disposing

↳ For disposal observe the applicable national regulations regarding electronic components.

12 Service and support

24-hour on-call service at:
+49 (0) 7021 573 - 0

Service hotline:
+49 (0) 7021 573 - 123
Monday to Friday 8.00 a.m. to 5.00 p.m. (UTC+1)

E-mail:
service.identify@leuze.de

Repair service and returns:
Procedure and Internet form can be found at
www.leuze.com/repair
Return address for repairs:
Service center
Leuze electronic GmbH + Co. KG
In der Braike 1
D-73277 Owen / Germany

12.1 What to do should servicing be required?

NOTICE
Please use this chapter as a master copy if service is required! ↳ Enter the contact information and fax the form together with your service order to the fax number given below.

Customer data (please complete)

Device type:	
Serial number:	
Firmware:	
Display messages:	
Status of LEDs:	
Error description:	
Company:	
Contact person/department:	
Phone (direct dial):	
Fax:	
Street/No:	
ZIP code/City:	
Country:	

Leuze Service fax number:
+49 7021 573 - 199

13 Technical data

13.1 General specifications

Table 13.1: Optics

Light source	Laser diode
Wavelength	655 nm
Life expectancy laser diode	100,000 h (typ. at +25 °C)
Beam deflection	Via rotating polygon wheel
Exit window	Glass
Laser class	2 acc. to IEC 60825-1:2007 (EN 60825-1:2008-05); II acc. to CDRH (U.S. 21 CFR 1040.10 with deviations corresponding to "Laser Notice No. 50" from June 24, 2007)
Working range	50 mm … 170 mm At a reading distance of 50 mm, the reading field width is 120 mm. At a reading distance beyond 100 mm, the reading field width is 160 mm (see figure 13.1, BPS reading field curve).

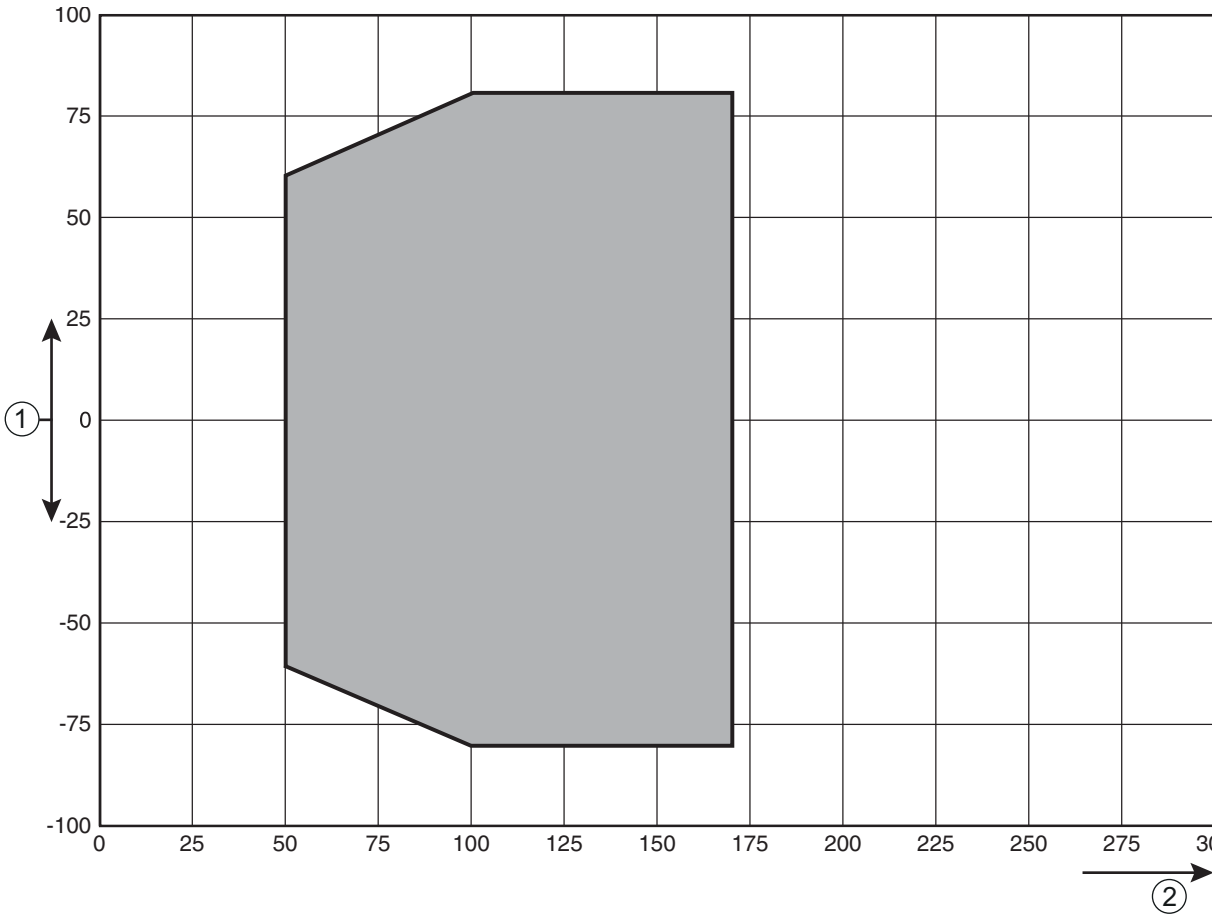

1 Reading field width [mm]
2 Reading distance [mm]

Figure 13.1: BPS reading field curve

Table 13.2: Measurement data

Reproducibility (3 sigma)	±0.15 mm
Response time	8 ms
Output time	1 ms
Basis for contouring error calculation	4 ms
Measurement range	0 … 10,000,000 mm
Max. traverse rate	10 m/s

Table 13.3: Operating and display elements

Display	Monochromatic graphical display, 128 x 32 pixels, With background lighting
Keyboard	Two buttons
LEDs	Two LEDs for power (PWR) and bus state (BUS), two-colored (red/green)

Table 13.4: Mechanical data

Housing	Diecast aluminum
Degree of protection	IP 65
Weight	Approx. 580 g (without connection hood)
Dimensions (without connection hood)	(H x W x D) 108.7 mm x 100.0 mm x 48.3 mm

Table 13.5: Environmental data

Air humidity	Max. 90% rel. humidity, non-condensing
Vibration	IEC 60068-2-6, test Fc
Shock Continuous shock	IEC 60068-2-27, test Ea
Electromagnetic compatibility	IEC 61000-6-3 IEC 61000-6-2 (contains IEC 61000-4-2, -3, -4, -5, -6)

Table 13.6: Certifications, conformity

Conformity	CE, CDRH
Certifications	UL 60950-1, CSA C 22.2 No. 60950-1

⚠ CAUTION

UL applications!

↳ For UL applications, use is only permitted in Class 2 circuits in accordance with the NEC (National Electric Code).

13.1.1 BPS without heating

⚠ CAUTION
UL applications! ↳ For UL applications, use is only permitted in Class 2 circuits in accordance with the NEC (National Electric Code).

Table 13.7: Electrical equipment

Interface type	RS 232, RS 422 Protocol: binary protocol Baud rate: 4,800 baud … 115,200 baud Data formats: • Data bits: 8 • Parity: none, even, odd • Stop bit: 1, 2
Service USB interface	Mini-B type USB 2.0 socket
Switching input / switching output	Two switching inputs/outputs Switching input: 18 … 30 VDC depending on supply voltage, I max. = 8 mA Switching output: 18 … 30 VDC, depending on supply voltage, I max. = 60 mA (short-circuit proof) Switching inputs/outputs protected against polarity reversal!
PWR LED green	Device ready (power on)
Operating voltage U_B	18 … 30 VDC (Class 2, protection class III)
Power consumption	Max. 3.7 W

Table 13.8: Ambient temperature

Ambient temperature (operation)	-5 °C … +50 °C
Ambient temperature (storage)	-35 °C … +70 °C

13.1.2 BPS with heating

⚠ CAUTION
UL applications! ↳ For UL applications, use is only permitted in Class 2 circuits in accordance with the NEC (National Electric Code).

Table 13.9: Electrical equipment

Operating voltage U_B	18 … 30 VDC
Power consumption	Max. 17.7 W

Structure of the heating	Housing heating and separate heating of the optics glass
Warmup time	Minimum 30 min at +24 VDC and an ambient temperature of -35 °C
Minimum conductor cross section	Conductor cross section of at least 0.75 mm² for the supply voltage supply line. **Note:** Wiring through of the voltage supply to multiple heating devices is not permissible. Standard, M12 ready-made cable not usable (insufficient conductor cross section).

Table 13.10: Ambient temperature

Ambient temperature (operation)	-35 °C … +50 °C
Ambient temperature (storage)	-35 °C … +70 °C

13.2 Bar code tape

Table 13.11: BCB dimensions

	BCB	BCB8
Grid	40 mm	30 mm
Standard height	47 mm	47 mm
Preferred heights	25 mm, Special heights for lengths greater than 150 m	25 mm, 30 mm, special heights for lengths greater than 150 m
Length	0 … 5m, 0 … 10m, 0 … 20m, …, 0 … 150m, 0 … 200m; Special lengths and special codings for lengths greater than 150 m (see chapter 14)	0 … 5 m, 0 … 10 m, 0 … 20 m, …, 0 … 150 m; Special lengths and special codings for lengths greater than 150 m (see chapter 14)
Tape tolerance	±1 mm per meter	±1 mm per meter

NOTICE
Twin tapes on request ↳ Twin tapes can be ordered on request (see chapter 14).

Table 13.12: BCB structure

Manufacturing process	Filmsetting
Surface protection	Polyester, matt
Base material	Polyester film, affixed without silicone

Adhesive	Acrylate adhesive
Strength of adhesive	0.1 mm
Adhesive strength (average values)	On aluminum: 25 N/25 mm On steel: 25 N/25 mm On polycarbonate: 22 N/25 mm On polypropylene: 20 N/25 mm

Table 13.13: BCB environmental data

Recommended processing temperature	0 °C … +45 °C
Ambient temperature	-40 °C … +120 °C
Dimensional stability	No shrinkage, tested according to DIN 30646
Curing	Final curing after 72 h; the BPS can detect the position immediately after the BCB is affixed.
Tear resistance	150 N
Elongation at tear	Min. 80%, tested in accordance with DIN 50014, DIN 51220
Weathering resistance	UV-light, humidity, salt spray (150 h/5 %)
Chemical resistance (checked at 23 °C over 24 h)	Transformer oil, diesel oil, white spirit, heptane, ethylene glycol (1:1)
Behavior in fire	Self-extinguishing after 15 s, does not drip
Surface	Grease-free, dry, clean, smooth
Mechanical properties	Scratch and wipe resistant, UV resistant, moisture resistant, partly chemical resistant

13.3 Dimensioned drawings

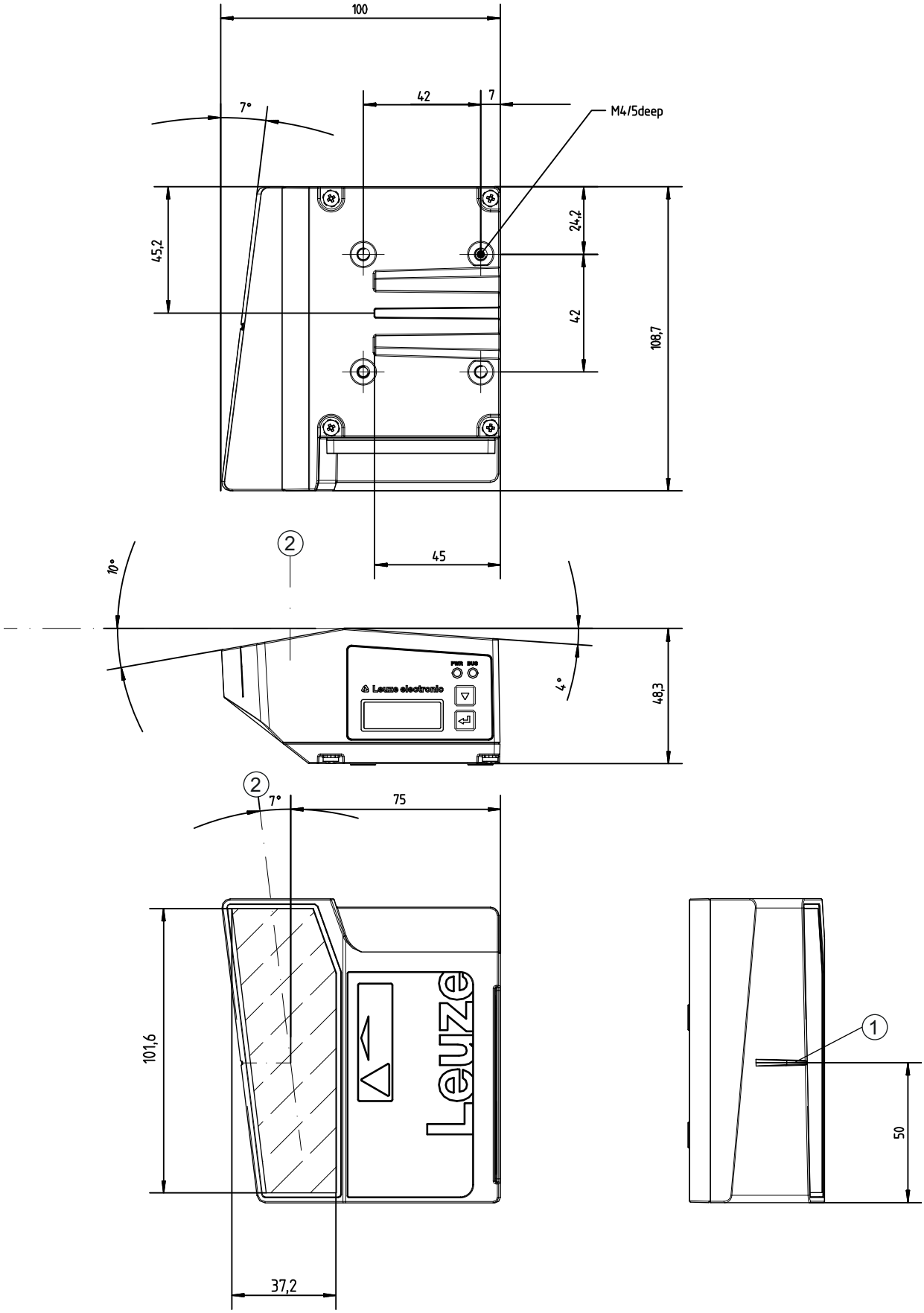

all dimensions in mm

1 Reference point for the bar code position

2 Optical axis

Dimensioned drawing BPS without connection hoodDimensioned drawing BPS with MS 348 connection hood

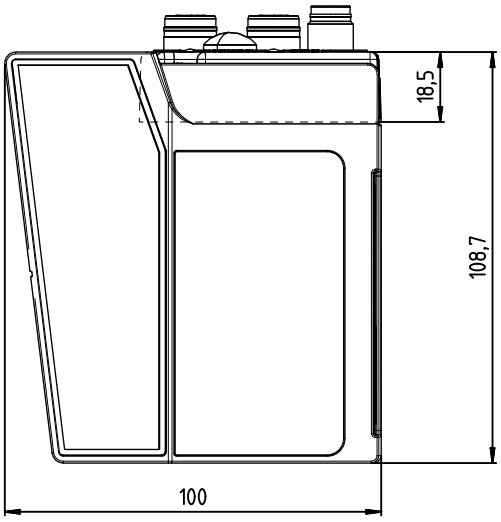

all dimensions in mm

Figure 13.2: Dimensioned drawing BPS with MS 300 connection hood

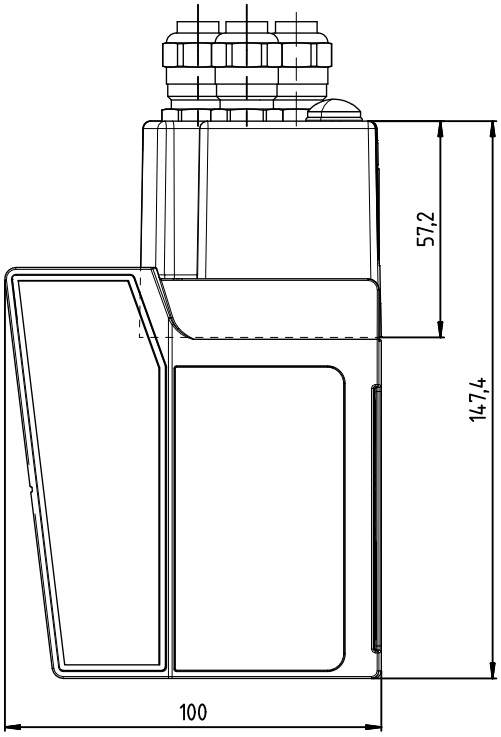

all dimensions in mm

Figure 13.3: Dimensioned drawing BPS with MK 300 connection hood

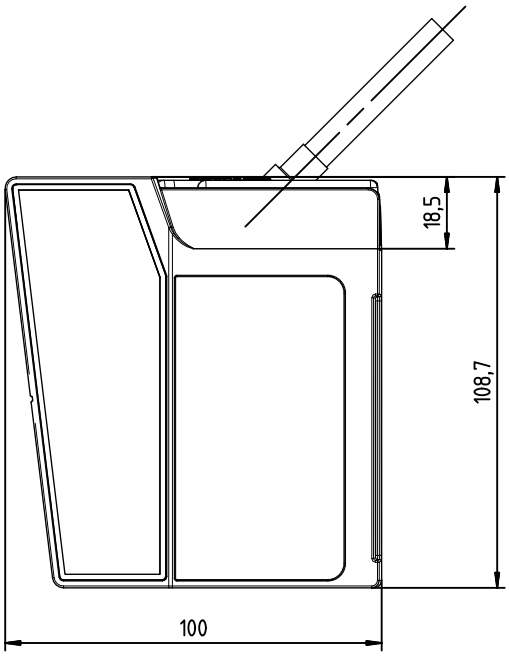

all dimensions in mm

Figure 13.4: Dimensioned drawing BPS with KB 301 connection hood

13.4 Dimensioned drawings: Accessories

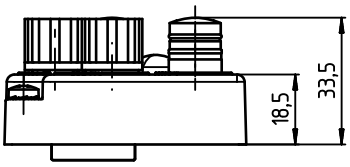

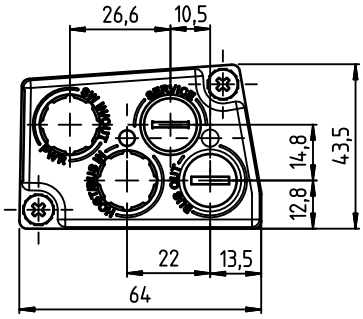

all dimensions in mm

Figure 13.5: Dimensioned drawing MS 300 connection hood

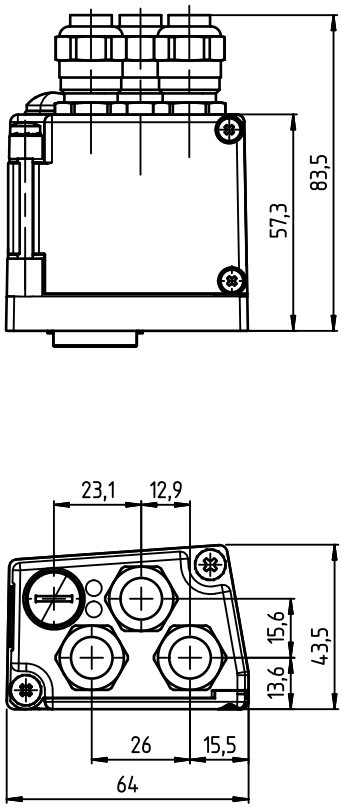

all dimensions in mm

Figure 13.6: Dimensioned drawing MK 300 connection hood

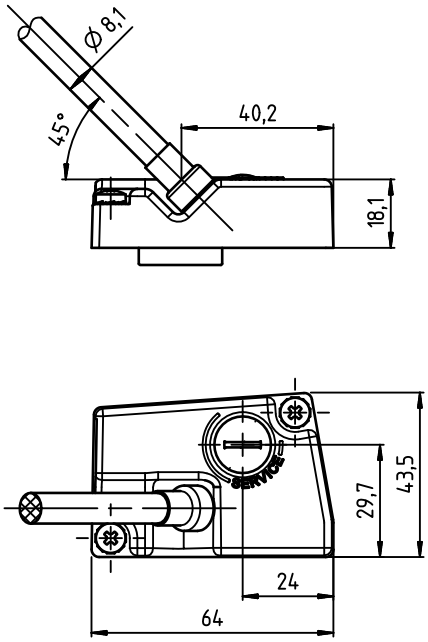

all dimensions in mm

Figure 13.7: Dimensioned drawing KB 301 connection hood

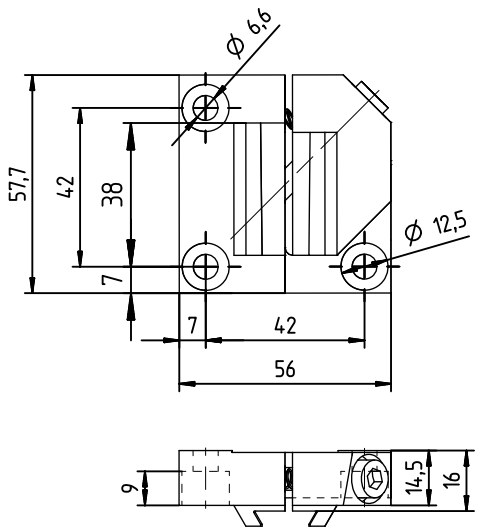

all dimensions in mm

Figure 13.8: Dimensioned drawing BTU 0300M-W mounting device

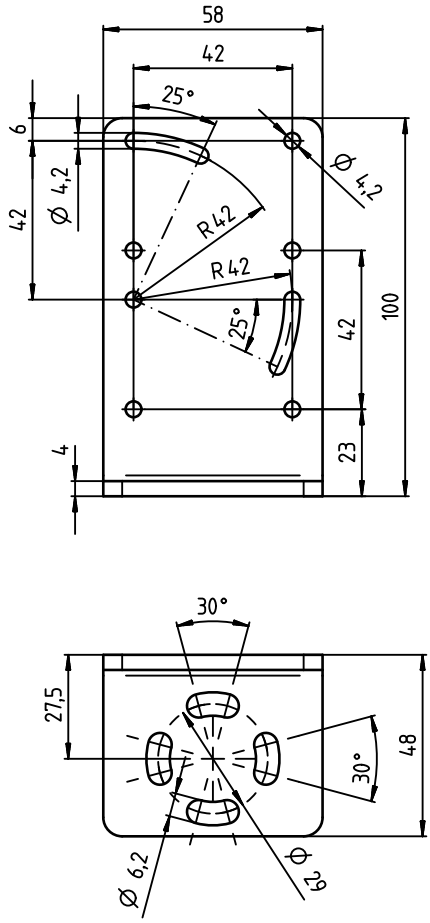

all dimensions in mm

Figure 13.9: Dimensioned drawing BT 300-W mounting bracket

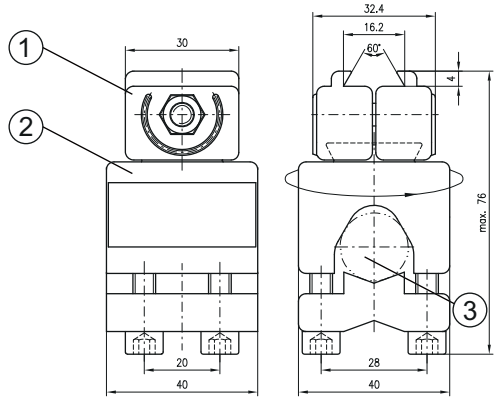

all dimensions in mm

1 Clamping jaws for mounting on the BPS
2 Clamp profile for fastening to round or oval pipes (¬ 16 … 20 mm)
3 Rod holder, turnable 360 °

Figure 13.10: Dimensioned drawing BT 56 mounting device

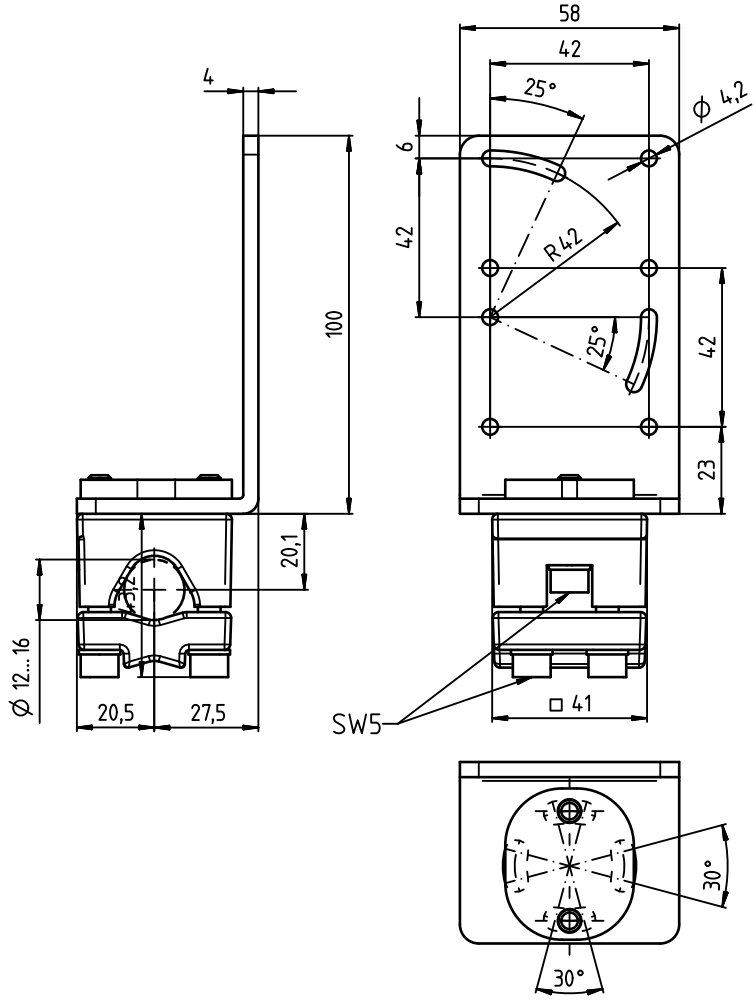

all dimensions in mm

Figure 13.11: Dimensioned drawing BT 300-1 mounting device

13.5 Dimensioned drawing bar code tape

Figure 13.12: Dimensioned drawing bar code tape BCB with 40 mm grid

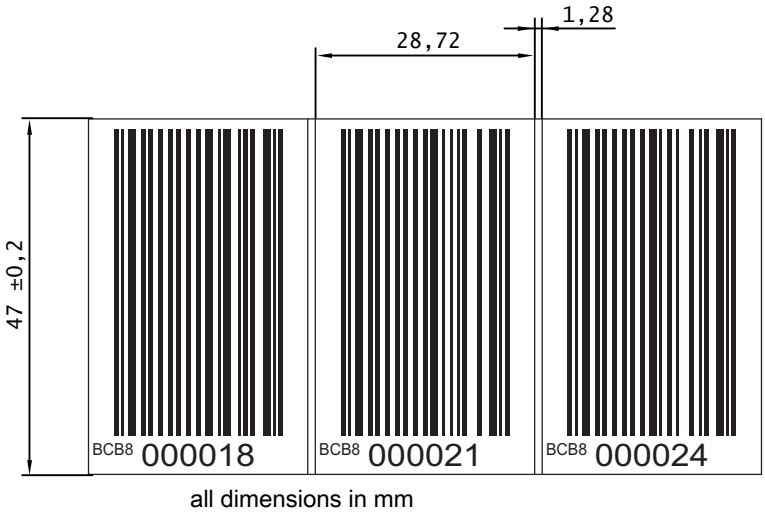

Figure 13.13: Dimensioned drawing bar code tape BCB8 with 30 mm grid

14 Order guide and accessories

14.1 BPS 300i type overview

Table 14.1: BPS 300i type overview

Part no.	Part designation	Description
50125668	BPS 300i SM 100 D H	BPS with RS 232 and RS 422 interface, display and heating
50125669	BPS 300i SM 100 D	BPS with RS 232 and RS 422 interface and display
50125670	BPS 300i SM 100	BPS with RS 232 and RS 422 interface

14.2 Connection hoods

Table 14.2: BPS connection hoods

Part no.	Part designation	Description
50116468	MS 300	Connection hood with M12 connectors
50116463	MK 300	Connection hood with spring-cage terminals
50114571	KB 301-3000	Connection hood with cable

14.3 Cables accessories

Table 14.3: Accessories – PWR connection cable (voltage supply)

Part no.	Part designation	Description
50104557	K-D M12A-5P-5m-PVC	PWR connection cable, M12 socket for PWR, axial plug outlet, open cable end, cable length 5 m, not shielded
50104559	K-D M12A-5P-10m-PVC	PWR connection cable, M12 socket for PWR, axial plug outlet, open cable end, cable length 10 m, not shielded

Table 14.4: Accessories – SSI/Interbus connection cable (only for RS 232)

Part no.	Part designation	Description
M12 plug for SSI/Interbus, axial connector, open line end		
50104172	KB SSI/IBS-2000-BA	SSI/Interbus connection cable, length 2 m
50104171	KB SSI/IBS-5000-BA	SSI/Interbus connection cable, length 5 m
50104170	KB SSI/IBS-10000-BA	SSI/Interbus connection cable, length 10 m
50104169	KB SSI/IBS-15000-BA	SSI/Interbus connection cable, length 15 m
50108446	KB SSI/IBS-30000-BA	SSI/Interbus connection cable, length 30 m

14.4 Other accessories

Table 14.5: Accessories – BPS connectors

Part no.	Part designation	Description
50020501	KD 095-5A	M12 axial socket for voltage supply, shielded
50038538	KD 02-5-BA	M12 axial socket, B-coded, for HOST or BUS IN, shielded

Table 14.6: Accessory USB cable

Part no.	Part designation	Description
50117011	KB USBA-USBminiB	USB service cable, 1 Type A and Mini-B type connector, length 1 m

Table 14.7: Accessories – fieldbus connection for BPS with RS 232 interface

Part no.	Part designation	Description
50112892	MA 208i	Modular fieldbus connection for field use; interfaces: RS 232 / Ethernet TCP/IP
50114154	MA 235i	Modular fieldbus connection for field use; interfaces: RS 232 / CANopen
50114155	MA 238i	Modular fieldbus connection for field use; interfaces: RS 232 / EtherCAT
50114156	MA 255i	Modular fieldbus connection for field use; interfaces: RS 232 / DeviceNet
50114157	MA 258i	Modular fieldbus connection for field use; interfaces: RS 232 / EtherNet/IP
50120463	KB 301-3000-MA200	Interconnection cable BPS 300i to modular connection units MA 2xxi, length 3 m

Table 14.8: Mounting device accessories

Part no.	Part designation	Description
50124941	BTU 0300M-W	Mounting device for wall mounting – precise alignment of the BPS without adjustment (easy-mount).
50121433	BT 300 W	Mounting bracket for wall mounting
50027375	BT 56	Mounting device for rod
50121434	BT 300-1	Mounting device for rod

14.5 Bar code tapes

Table 14.9: Accessories – BCB

Part no.	Part designation	Description
50038895	BCB 005	Bar code tape, 5 m length, 47 mm high
50040041	BCB 010	Bar code tape, 10 m length, 47 mm high
50037489	BCB 020	Bar code tape, 20 m length, 47 mm high
50037491	BCB 030	Bar code tape, 30 m length, 47 mm high
50037492	BCB 040	Bar code tape, 40 m length, 47 mm high
50038894	BCB 050	Bar code tape, 50 m length, 47 mm high
50038893	BCB 060	Bar code tape, 60 m length, 47 mm high
50038892	BCB 070	Bar code tape, 70 m length, 47 mm high
50038891	BCB 080	Bar code tape, 80 m length, 47 mm high
50038890	BCB 090	Bar code tape, 90 m length, 47 mm high
50037493	BCB 100	Bar code tape, 100 m length, 47 mm high
50040042	BCB 110	Bar code tape, 110 m length, 47 mm high
50040043	BCB 120	Bar code tape, 120 m length, 47 mm high
50040044	BCB 130	Bar code tape, 130 m length, 47 mm high
50040045	BCB 140	Bar code tape, 140 m length, 47 mm high
50040046	BCB 150	Bar code tape, 150 m length, 47 mm high
50037494	BCB 200	Bar code tape, 200 m length, 47 mm high
50037495	BCB special length 47 mm height	Bar code tape with special length, 47 mm high
50102600	BCB special length 25 mm height	Bar code tape with special length, 25 mm high
50106979	BCB special length / height	Bar code tape with special length and height
50111786	BCB special length / height / winding	Bar code tape with special length, height and wrapping direction
50106478	MVS label 40 mm 10 pieces	MVS label, 40 mm grid; packaging unit: 10 pieces
50126134	MV0 label 40 mm 10 pieces	MV0 label, 40 mm grid; packaging unit: 10 pieces
50106473	Repair kit 40 mm	Repair kit, 40 mm grid

Table 14.10: Accessories – BCB8

Part no.	Part designation	Description
50104792	BCB8 010	Bar code tape, 10 m length, 47 mm high
50104793	BCB8 020	Bar code tape, 20 m length, 47 mm high
50104794	BCB8 030	Bar code tape, 30 m length, 47 mm high
50104795	BCB8 040	Bar code tape, 40 m length, 47 mm high
50104796	BCB8 050	Bar code tape, 50 m length, 47 mm high

Part no.	Part designation	Description
50104797	BCB8 060	Bar code tape, 60 m length, 47 mm high
50104798	BCB8 070	Bar code tape, 70 m length, 47 mm high
50104799	BCB8 080	Bar code tape, 80 m length, 47 mm high
50104800	BCB8 090	Bar code tape, 90 m length, 47 mm high
50104801	BCB8 100	Bar code tape, 100 m length, 47 mm high
50104802	BCB8 110	Bar code tape, 110 m length, 47 mm high
50104803	BCB8 120	Bar code tape, 120 m length, 47 mm high
50104804	BCB8 130	Bar code tape, 130 m length, 47 mm high
50104805	BCB8 140	Bar code tape, 140 m length, 47 mm high
50104806	BCB8 150	Bar code tape, 150 m length, 47 mm high
50104807	BCB8 special length 47 mm height	Bar code tape with special length, 47 mm high
50104808	BCB8 special length 30 mm height	Bar code tape with special length, 30 mm high
50104809	BCB8 special length 25 mm height	Bar code tape with special length, 25 mm high
50106980	BCB8 special length / height	Bar code tape with special length and height
50106476	MVS label 30 mm 10 pieces	MVS label, 30 mm grid; packaging unit: 10 pieces
50126135	MV0 label 30 mm 10 pieces	MV0 label, 30 mm grid; packaging unit: 10 pieces
50106472	Repair kit 30 mm	Repair kit, 30 mm grid

Table 14.11: Accessories – twin tapes

Part no.	Part designation	Description
50120378	BCB twin tape special length / height	BCB twin tape, 40 mm grid, with special length and high; delivery contents: 2 bar code tapes with the same value range
50120379	BCB8 twin tape special length / height	BCB8 twin tape, 30 mm grid, with special length and high; delivery contents: 2 bar code tapes with the same value range
50120380	BCB twin tape special length	BCB twin tape, 40 mm grid, 47 mm high; delivery contents: 2 bar code tapes with the same value range
50120381	BCB8 twin tape special length	BCB8 twin tape, 30 mm grid, 47 mm high; delivery contents: 2 bar code tapes with the same value range

15 EC Declaration of Conformity

The bar code positioning systems of the BPS 300 series have been developed and manufactured in accordance with the applicable European standards and directives.

The manufacturer of the product, **Leuze electronic GmbH + Co. KG** in D-73277 Owen, possesses a certified quality assurance system in accordance with ISO 9001.

16 Appendix

16.1 BCB bar code tape with 40 mm grid

Figure 16.1: Continuous, 40 mm grid

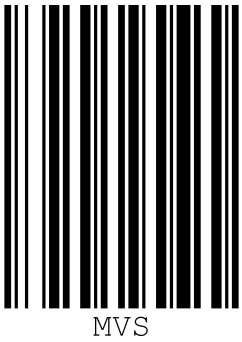

Figure 16.2: Single label MVS, 40 mm grid

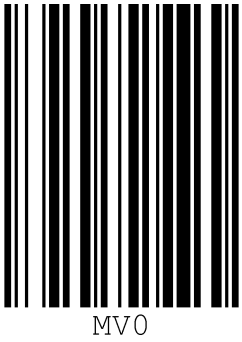

Figure 16.3: Single label MV0, 40 mm grid

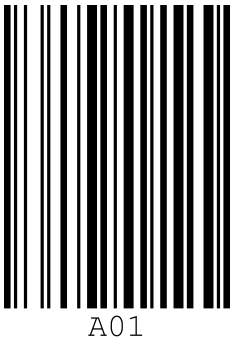

Figure 16.4: Single marker label, 40 mm grid

16.2 Bar code tape BCB8 with 30 mm grid

Figure 16.5: Continuous, 30 mm grid

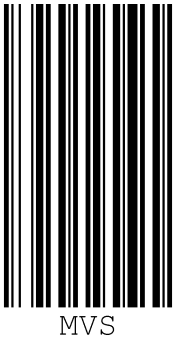

Figure 16.6: Single label MVS, 30 mm grid

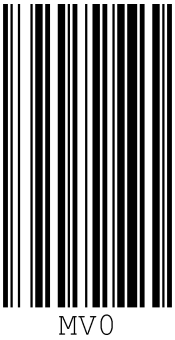

Figure 16.7: Single label MV0, 30 mm grid

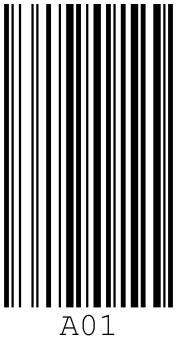

Figure 16.8: Single marker label, 30 mm grid