SMART
SENSOR
BUSINESS

Leuze electronic

the sensor people

MLC 520
Safety Light Curtains

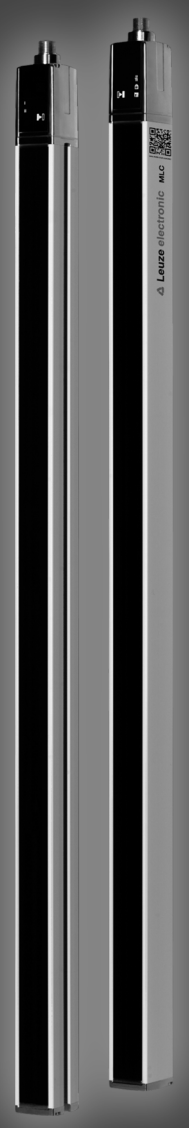

EN 2019/03/11 - 700191
We reserve the right to make technical changes

SAFE IMPLEMENTATION AND OPERATION
Original operating instructions

ПРОМЭЛЕКТРОНИКА / sales@prom-elec.com

© 2019
Leuze electronic GmbH & Co. KG
In der Braike 1
D-73277 Owen / Germany
Phone: +49 7021 573-0
Fax: +49 7021 573-199
http://www.leuze.com
info@leuze.com

1 About this document ... 5
1.1 Used symbols and signal words ... 5
1.2 Checklists ... 6
2 Safety ... 7
2.1 Intended use and foreseeable misuse ... 7
2.1.1 Intended use ... 7
2.1.2 Foreseeable misuse ... 8
2.2 Necessary competencies ... 8
2.3 Responsibility for safety ... 9
2.4 Disclaimer ... 9
3 Device description ... 10
3.1 Device overview of the MLC family ... 10
3.2 Connection technology ... 12
3.3 Display elements ... 12
3.3.1 Operating indicators on the MLC 500 transmitter ... 12
3.3.2 Operating indicators on the MLC 520 receiver ... 13
3.3.3 Alignment display ... 15
4 Functions ... 16
4.1 Start/restart interlock RES ... 16
4.2 EDM contactor monitoring ... 17
4.3 Transmission channel changeover ... 17
4.4 Operating range selection ... 18
5 Applications ... 19
5.1 Point of operation guarding ... 19
5.2 Access guarding ... 20
5.3 Danger zone guarding ... 20
6 Mounting ... 21
6.1 Arrangement of transmitter and receiver ... 21
6.1.1 Calculation of safety distance S ... 21
6.1.2 Calculation of safety distance if protective fields act orthogonally to the approach direction ... 22
6.1.3 Calculation of safety distance S for parallel approach to the protective field ... 27
6.1.4 Minimum distance to reflective surfaces ... 28
6.1.5 Preventing mutual interference between adjacent devices ... 29
6.2 Mounting the safety sensor ... 30
6.2.1 Suitable mounting locations ... 30
6.2.2 Definition of directions of movement ... 31
6.2.3 Fastening via BT-NC60 sliding blocks ... 31
6.2.4 Fastening via BT-2HF swivel mount ... 31
6.2.5 Fastening via BT-2SB10 swiveling mounting brackets ... 32
6.2.6 One-sided mounting on the machine table ... 33
6.3 Mounting accessories ... 34
6.3.1 Deflecting mirror for multiple-side guarding ... 34
6.3.2 MLC-PS protective screen ... 35

7 Electrical connection ... 36
7.1 Pin assignment transmitter and receiver ... 36
7.1.1 MLC 500 transmitter ... 36
7.1.2 MLC 520 receiver ... 38
7.2 Circuit diagram examples ... 39
7.2.1 MLC 520 circuit diagram example ... 39

8 Starting up the device ... 40
8.1 Switching on ... 40
8.2 Aligning the sensor ... 40
8.3 Aligning of deflecting mirrors with the laser alignment aid ... 41
8.4 Unlocking start/restart interlock ... 42

9 Testing ... 43
9.1 Before commissioning and following modifications ... 43
9.1.1 Checklist for integrator – to be performed prior to commissioning and following modifications ... 43
9.2 To be performed periodically by competent persons ... 45
9.3 Periodically by the operator ... 45
9.3.1 Checklist – periodically by the operator ... 46

10 Maintenance ... 47

11 Troubleshooting ... 48
11.1 What to do in case of failure? ... 48
11.2 Operating indicators of the LEDs ... 48
11.3 Error messages 7-segment display ... 50

12 Disposing ... 52

13 Service and support ... 53

14 Technical data ... 54
14.1 General specifications ... 54
14.2 Dimensions, weight, response time ... 57
14.3 Dimensioned drawings: Accessories ... 59

15 Order guide and accessories ... 61

16 EU/EC Declaration of Conformity ... 67

1 About this document

1.1 Used symbols and signal words

Tab. 1.1: Warning symbols and signal words

	Symbol indicating dangers to persons
	Symbol indicating possible property damage
NOTE	Signal word for property damage Indicates dangers that may result in property damage if the measures for danger avoidance are not followed.
CAUTION	Signal word for minor injuries Indicates dangers that may result in minor injury if the measures for danger avoidance are not followed.
WARNING	Signal word for serious injury Indicates dangers that may result in severe or fatal injury if the measures for danger avoidance are not followed.
DANGER	Signal word for life-threatening danger Indicates dangers with which serious or fatal injury is imminent if the measures for danger avoidance are not followed.

Tab. 1.2: Other symbols

	Symbol for tips Text passages with this symbol provide you with further information.
↳	Symbol for action steps Text passages with this symbol instruct you to perform actions.
⇨	Symbol for action results Text passages with this symbol describe the result of the preceding action.

Tab. 1.3: Terms and abbreviations

Response time	The response time of the protective device is the maximum time between the occurrence of the event that results in activation of the safety sensor and the provision of the switching signal at the interface of the protective device (e.g., OFF state of the OSSD pair).
AOPD	Active Optoelectronic Protective Device (**A**ctive **O**ptoelectronic **P**rotective **D**evice)
ESPE	**E**lectro-**s**ensitive **p**rotective **e**quipment
EDM	Contactor monitoring (**E**xternal **D**evice **M**onitoring)
LED	LED, display element in transmitter and receiver
MLC	Brief description of the safety sensor, consisting of transmitter and receiver
$MTTF_d$	Mean time to dangerous failure (**M**ean **T**ime **T**o dangerous **F**ailure)
OSSD	Safety-related switching output (**O**utput **S**ignal **S**witching **D**evice)

PFH_d	Probability of a dangerous failure per hour (**P**robability of dangerous **F**ailure per **H**our)
PL	**P**erformance **L**evel
RES	Start/restart interlock (Start/**RES**tart interlock)
Scan	Consecutive scans of the protective field from the first to the last beam
Safety sensor	System consisting of transmitter and receiver
SIL	**S**afety **I**ntegrity **L**evel
State	ON: device intact, OSSD switched on OFF: device intact, OSSD switched off Locking: device, connection or control / operation faulty, OSSD switched off (lock-out)

1.2 Checklists

The checklists (see chapter 9 "Testing") serve as a reference for the machine manufacturer or supplier. They replace neither testing of the complete machine or system prior to initial commissioning nor their periodic testing by a qualified person (see chapter 2.2 "Necessary competencies"). The checklists contain minimum testing requirements. Depending on the application, other tests may be necessary.

2 Safety

Before using the safety sensor, a risk assessment must be performed according to valid standards (e.g. EN ISO 12100:2010, EN ISO 13849-1:2015, EN 62061:2005+A1:2012). The result of the risk assessment determines the required safety level of the safety sensor (see chapter 14.1 "Safety-relevant technical data").

For mounting, operating and testing, this document as well as all applicable national and international standards, regulations, rules and directives must be observed. Relevant and supplied documents must be observed, printed out and handed to affected persons.

↳ Before working with the safety sensor, completely read and observe the documents applicable to your task.

In particular, the following national and international legal regulations apply for the commissioning, technical inspections and work with safety sensors:

- Directive 2006/42/EC
- Directive 2014/35/EU
- Directive 2014/30/EU
- Directive 89/655/EEC supplemented by directive 95/63 EC
- OSHA 1910 Subpart O
- Safety regulations
- Accident-prevention regulations and safety rules
- Ordinance on Industrial Safety and Health and employment protection act
- Product Safety Law (ProdSG and 9. ProdSV)

	NOTICE
	For safety-related information you may also contact local authorities (e.g., industrial inspectorate, employer's liability insurance association, labor inspectorate, occupational safety and health authority).

2.1 Intended use and foreseeable misuse

	WARNING
	A running machine may result in serious injury! ↳ Make certain that the safety sensor is correctly connected and that the protective function of the protective device is ensured. ↳ Make certain that, during all conversions, maintenance work and inspections, the system is securely shut down and protected against being restarted.

2.1.1 Intended use

- The safety sensor may only be used after it has been selected in accordance with the respectively applicable instructions and relevant standards, rules and regulations regarding labor protection and safety at work, and after it has been installed on the machine, connected, commissioned, and checked by a competent person (see chapter 2.2 "Necessary competencies"). The devices are designed for indoor use only.
- When selecting the safety sensor it must be ensured that its safety-related capability meets or exceeds the required performance level PL_r ascertained in the risk assessment (see chapter 14.1 "General specifications").
- The safety sensor protects persons or body parts at points of operation, danger zones or access points of machines and systems.
- With the *access guarding* function, the safety sensor detects persons only when they enter the danger zone but cannot tell whether there are any persons inside the danger zone. For this reason, a start/restart interlock or a suitable stepping behind protection in the safety chain is essential in this case.

- Maximum permissible approach speeds (see ISO 13855):
  - 1.6 m/s for access guarding
  - 2.0 m/s for guards of points of operation
- The construction of the safety sensor must not be altered. When manipulating the safety sensor, the protective function is no longer guaranteed. Manipulating the safety sensor also voids all warranty claims against the manufacturer of the safety sensor.
- The improper repair of the protective device may result in loss of the protective function. Make no repairs to the device components.
- The safety sensor must be inspected regularly by a competent person to ensure proper integration and mounting (see chapter 2.2 "Necessary competencies").
- The safety sensor must be exchanged after a maximum of 20 years. Repairs or the exchange of wear parts do not extend the mission time.

2.1.2 Foreseeable misuse

Any use other than that defined under the “Approved purpose” or which goes beyond that use is considered improper use.

In principle, the safety sensor is **not** suitable as a protective device for use in the following cases:

- Danger posed by ejected objects or the spraying of hot or hazardous liquids from within the danger zone
- Applications in explosive or easily flammable atmospheres

2.2 Necessary competencies

The safety sensor may only be configured, installed, connected, commissioned, serviced and tested in its respective application by persons who are suitably qualified for the given task. General prerequisites for suitably qualified persons:

- They have a suitable technical education.
- They are familiar with the relevant parts of the operating instructions for the safety sensor and the operating instructions for the machine.

Task-specific minimum requirements for competent persons:

Configuration

Specialist knowledge and experience in the selection and use of protective devices on machines as well as the application of technical rules and the locally valid regulations on labor protection, safety at work and safety technology.

Specialist knowledge in programming safety-related controls SRASW acc. to ISO 13849-1.

Mounting

Specialist knowledge and experience needed for the safe and correct installation and alignment of the safety sensor with regard to the respective machine.

Electrical installation

Specialist knowledge and experience needed for the safe and correct electrical connection as well as safe integration of the safety sensor in the safety-related control system.

Operation and maintenance

Specialist knowledge and experience needed for the regular inspection and cleaning of the safety sensor – following instruction by the person responsible.

Servicing

Specialist knowledge and experience in the mounting, electrical installation and the operation and maintenance of the safety sensor in accordance with the requirements listed above.

Commissioning and testing

- Experience and specialist knowledge in the rules and regulations of labor protection, safety at work and safety technology that are necessary for being able to assess the safety of the machine and the use of the safety sensor, including experience with and knowledge of the measuring equipment necessary for performing this work.
- In addition, a task related to the subject matter is performed in a timely manner and knowledge is kept up to date through continuous further training - *Competent person* in terms of the German Betriebssicherheitsverordnung (Ordinance on Industrial Safety and Health) or other national legal regulations.

2.3 Responsibility for safety

Manufacturer and operator must ensure that the machine and implemented safety sensor function properly and that all affected persons are adequately informed and trained.

The type and content of all imparted information must not lead to unsafe actions by users.

The manufacturer of the machine is responsible for:

- Safe machine construction and information on any residual risks
- Safe implementation of the safety sensor, verified by the initial test performed by a competent person (see chapter 2.2 "Necessary competencies")
- Imparting all relevant information to the operating company
- Adhering to all regulations and directives for the safe commissioning of the machine

The operator of the machine is responsible for:

- Instructing the operator
- Maintaining the safe operation of the machine
- Adhering to all regulations and directives for labor protection and safety at work
- Periodic testing by a competent person (see chapter 2.2 "Necessary competencies")

2.4 Disclaimer

The liability of Leuze electronic GmbH + Co. KG is to be excluded in the following cases:

- Safety sensor is not used as intended.
- Safety notices are not adhered to.
- Reasonably foreseeable misuse is not taken into account.
- Mounting and electrical connection are not properly performed.
- Proper function is not tested (see chapter 9 "Testing").
- Changes (e.g., constructional) are made to the safety sensor.

3 Device description

The safety sensors from the MLC 500 series are active opto-electronic protective devices. They satisfy the following standards:

	MLC 500
Type in accordance with EN IEC 61496	4
Category in accordance with EN ISO 13849	4
Performance Level (PL) in accordance with EN ISO 13849-1:2015	e
Safety Integrity Level (SIL) in accordance with IEC 61508 and SILCL in accordance with EN IEC 62061	3

The safety sensor consists of a transmitter and a receiver (see chapter 3.1 "Device overview of the MLC family"). It is protected against overvoltage and overcurrent acc. to IEC 60204-1 (protection class 3). The safety sensor is not dangerously influenced by ambient light (e.g., welding sparks, warning lights).

3.1 Device overview of the MLC family

The series is characterized by four different receiver classes (Basic, Standard, Extended, SPG) with specific features and properties (see table below).

Tab. 3.1: Device models in the series with specific features and functions

Device type	Transmitter			Receiver				
Function package				Basic		Standard	Extended	SPG
Model	MLC 500 MLC 501	MLC 500/ A	MLC 502	MLC 510 MLC 511	MLC 510/ A	MLC 520	MLC 530	MLC 530 SPG
OSSDs (2x)				■		■	■	■
AS-i		■			■			
Transmission channel changeover	■		■	■		■	■	■
LED indicator	■	■	■	■	■	■	■	■
7-segment display						■	■	■
Automatic start/restart				■		■	■	
RES						■	■	■
EDM						■		
Linkage							■	
Blanking							■	■
Muting							■	
SPG								■
Multi-scan							■	■
Range reduction	■		■					
Test input			■					

Protective field properties

The beam distance and the number of beams are dependent on the resolution and protective field height.

NOTICE	
	Depending on the resolution, the effective protective field height can be larger than the optically active area of the safety sensor housed in yellow (see chapter 3.1 "Device overview of the MLC family" and see chapter 14.1 "General specifications").

Device synchronization

The synchronization of receiver and transmitter for creating a functioning protective field is done optically, i.e. without cables, via two specially coded synchronization beams. A cycle (i.e. a pass from the first to the last beam) is called a scan. The length of a scan determines the length of the response time and affects the calculation of the safety distance (see chapter 6.1.1 "Calculation of safety distance S").

NOTICE	
	For the correct synchronization and function of the safety sensor, at least one of the two synchronization beams must be free during synchronization and operation.

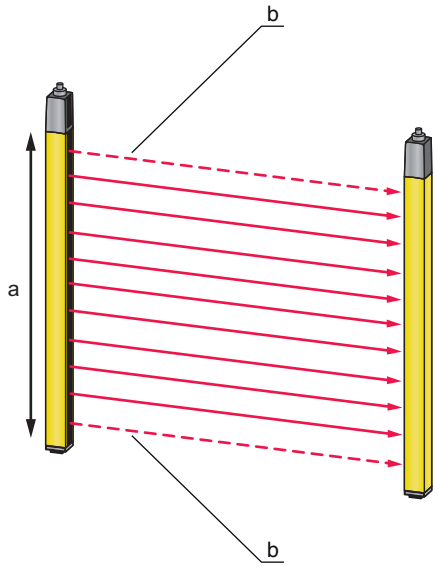

a	Optically active area, housed in yellow
b	Synchronization beams

Fig. 3.1: Transmitter-receiver system

ПРОМЭЛЕКТРОНИКА / sales@prom-elec.com

QR code

A QR code as well as the corresponding web address are located on the safety sensor.

At the web address, you will find device information and error messages (see chapter 11.3 "Error messages 7-segment display") after scanning the QR code with a mobile end device or after entering the web address.

When using mobile end devices, mobile service charges can accrue.

www.mobile.leuze.com/mlc/

Fig. 3.2: QR code with corresponding web address (URL) on the safety sensor

3.2 Connection technology

The transmitter and receiver feature an M12 connector as an interface to the machine control with the following number of pins:

Device model	Device type	Device plug
MLC 500	Transmitter	5-pin
MLC 520	Standard receiver	8-pin

3.3 Display elements

The display elements of the safety sensors simplify start-up and fault analysis.

3.3.1 Operating indicators on the MLC 500 transmitter

Located in the connection cap on the transmitter are two LEDs which serve as function indicators:

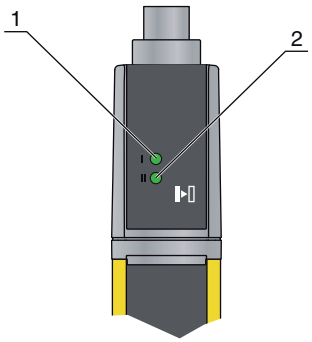

1 LED1, green/red
2 LED2, green

Fig. 3.3: Indicators on the MLC 500 transmitter

Tab. 3.2: Meaning of the LEDs on the transmitter

LED	Color	State	Description
1	Green/red	OFF	Device switched off
		Red	Device error
		Green	Normal operation

LED	Color	State	Description
2	Green	Flashing	For 10 s after switch-on: reduced range selected by the wiring (see chapter 7.1 "Pin assignment transmitter and receiver").
		OFF	Transmission channel C1
		ON	Transmission channel C2

3.3.2 Operating indicators on the MLC 520 receiver

Two LEDs and a 7-segment display for showing the operating state are located on the receiver:

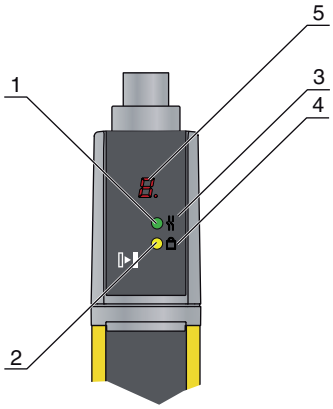

1 LED1, red/green
2 LED2, yellow
3 OSSD icon
4 RES icon
5 7-segment display

Fig. 3.4: Indicators on the MLC 520 receiver

Tab. 3.3: Meaning of the LEDs on the receiver

LED	Color	State	Description
1	Red/green	OFF	Device switched off
		Red	OSSD off
		Red, flashing slowly (approx. 1 Hz)	External error
		Red, flashing fast (approx. 10 Hz)	Internal error
		Green, flashing slowly (approx. 1 Hz)	OSSD on, weak signal
		Green	OSSD on
2	Yellow	OFF	• RES deactivated • or RES activated and enabled • or RES blocked and protective field interrupted
		ON	RES activated and blocked but ready to be unlocked - protective field free

7-segment display at the MLC 520 receiver

In normal operation, the 7-segment display shows the number of the selected transmission channel. In addition, it helps during the detailed error diagnostics (see chapter 11 "Troubleshooting") and serves as an alignment aid (see chapter 8.2 "Aligning the sensor").

Tab. 3.4: Meaning of the 7-segment display

Display	Description
After switching on	
8	Self test
t n n	Response time (t) of the receiver in milliseconds (n n)
In normal operation	
C1	Transmission channel C1
C2	Transmission channel C2
For alignment	
	Alignment display (see chapter 3.3.3 "Alignment display") • Segment 1: beam area in upper third of the protective field • Segment 2: beam area in middle third of the protective field • Segment 3: beam area in lower third of the protective field
For error diagnostics	
F…	**F**ailure, internal device error
E…	**E**rror, external error
U…	**U**sage info, application error

Tab. 3.5: Meaning of the 7-segment display

Display	Description
After switching on	
8	Self test
t n n	Response time (t) of the receiver in milliseconds (n n)
In normal operation	
C1	Transmission channel C1
C2	Transmission channel C2
For alignment	
	Alignment display (Alignment display).
For error diagnostics	
F…	**F**ailure, internal device error
E…	**E**rror, external error
U…	**U**sage info, application error

For error diagnostics, the error's respective letter is displayed first followed by the number code. The display is repeated cyclically. An AutoReset is carried out after 10 s for errors that do not cause locking, with an unauthorized restart being impossible. In the case of blocking errors, the voltage supply must be separated and the cause of the error must be eliminated. Before switching on again, the steps taken before initial commissioning must be repeated (see chapter 9.1 "Before commissioning and following modifications").

The 7-segment display switches to alignment mode when the device has not yet been aligned or when the protective field has been interrupted (after 5 s). In this case, a fixed beam area from the protective field is assigned to every segment.

3.3.3 Alignment display

Approximately 5 s after a protective-field interruption, the 7-segment display switches to alignment mode.

In this mode, one third of the total protective field (top, middle, bottom) is assigned to one of the three horizontal segments. In the case of uniform resolution over the entire protected area, the state of this partial protective field is indicated as follows:

Tab. 3.6: Function of alignment display

Segment	Description
On	All beams in the beam area are uninterrupted.
Flashing	At least one, but not all beams in the beam area are uninterrupted.
Switched off	All beams in the beam area are interrupted.

When the protective field has been free for about 5 s, the device switches back to the display of the operating mode.

4 Functions

An overview of features and functions of the safety sensor can be found in chapter “Device description” (see chapter 3.1 "Device overview of the MLC family").

Overview of functions

- Start/restart interlock (RES)
- EDM
- Range reduction
- Transmission channel changeover

4.1 Start/restart interlock RES

After accessing the protective field, the start/restart interlock ensures that the safety sensor remains in the OFF state after the protective field has been cleared. It prevents automatic release of the safety circuits and automatic start-up of the system, e.g. if the protective field is again clear or if an interruption in the voltage supply is restored.

NOTICE

For access guarding, the start/restart interlock function is mandatory. The protective device may only be operated without start/restart interlock in certain exceptional cases and under certain conditions acc. to ISO 12100.

WARNING

Deactivation of the start/restart interlock may result in serious injury!

↳ Implement the start/restart interlock on the machine or in a downstream safety circuit.

Using start/restart interlock

↳ Wire the MLC 520 receiver appropriately for the desired operating mode (see chapter 7 "Electrical connection").

The start/restart interlock function is automatically activated.

Switching the safety sensor back on after shutting down (OFF state):

↳ Press the reset button (press/release between 0.15 s and 4 s)

NOTICE

The reset button must be located outside the danger zone in a safe place and give the operator a good view of the danger zone so that he/she can check whether anyone is located in it (according to IEC 62046) before pressing the reset button.

DANGER

Risk of death if start/restart is operated unintentionally!

↳ Ensure that the reset button for unlocking the start/restart interlock cannot be reached from the danger zone.

↳ Before unlocking the start/restart interlock, make certain that no people are in the danger zone.

After the reset button has been actuated, the safety sensor switches to the ON state.

4.2 EDM contactor monitoring

NOTICE
The contactor monitoring of the MLC 520 safety sensors can be activated through appropriate wiring (see chapter 7.1.1 "MLC 500 transmitter")!

The “contactor monitoring” function monitors the contactors, relays or valves connected downstream of the safety sensor. Prerequisite for this are switching elements with positive-guided feedback contacts (normally closed contacts).

Implement the contactor monitoring function:

- through appropriate wiring of the MLC 520 safety sensors (see chapter 7.1.1 "MLC 500 transmitter").
- through the external contactor monitoring of the downstream safety relay, (e.g. MSI series from Leuze electronic)
- or through contactor monitoring of the downstream safety PLC (optional, integrated via a safety bus)

If contactor monitoring is activated (see chapter 7 "Electrical connection"), it operates dynamically, i.e., in addition to monitoring the closed feedback circuit every time before the OSSDs are switched on, it also checks whether the release of the feedback circuit opened within 500 ms and, after the OSSDs are switched off, whether it has closed again within 500 ms. If this is not the case, the OSSDs return to the OFF state after being switched on briefly. An error message appears on the 7-segment display (E30, E31) and the receiver switches to the fault interlock state from which it can only be returned to normal operation by switching the supply voltage off and back on again.

4.3 Transmission channel changeover

Transmission channels are used to prevent mutual interference of safety sensors which are located close to each other.

NOTICE
To guarantee reliable operation, the infrared beams are modulated so they can be discerned from the ambient light. Welding sparks or warning lights, e.g. from passing high-lift trucks, thereby do not influence the protective field.

With the factory setting, the safety sensor works in all operating modes with transmission channel C1.

The transmission channel of the transmitter can be switched by changing the supply voltage polarity (see chapter 7.1.1 "MLC 500 transmitter").

The transmission channel of the receiver can be switched by changing the supply voltage polarity (MLC 520 receiver).

NOTICE
Faulty function due to incorrect transmission channel! Select the same transmission channel on the transmitter and corresponding receiver.

4.4 Operating range selection

In addition to selecting the suitable transmission channels (see chapter 4.3 "Transmission channel changeover"), the operating range selection also serves to prevent mutual interference of adjacent safety sensors. At reduced operating range the light power of the transmitter reduces, so that around half of the nominal range is reached.

Select operating range:

- ↳ Wire pin 4 (see chapter 7.1 "Pin assignment transmitter and receiver").
- ⇨ The wiring of pin 4 determines the transmitting power and thereby the range.

	WARNING
	Impairment of the protective function due to incorrect transmitting power! The light power emitted from the transmitter is reduced through a single channel and without safety-relevant monitoring. ↳ Do not use this configuration option for safety purposes. ↳ Note that the distance to reflective surfaces must always be selected so that no reflection bypass can occur even at maximum transmitting power (see chapter 6.1.4 "Minimum distance to reflective surfaces").

5 Applications

The safety sensor only creates square protective fields.

NOTICE	
	For applications with increased mechanical requirements, device models are available in version MLC…/V (see chapter 15 "Order guide and accessories").

5.1 Point of operation guarding

Point of operation guarding for hand and finger protection is typically the most common application for this safety sensor. In accordance with EN ISO 13855, resolutions from 14 to 40 mm make sense here. This yields the necessary safety distance, among others (see chapter 6.1.1 "Calculation of safety distance S").

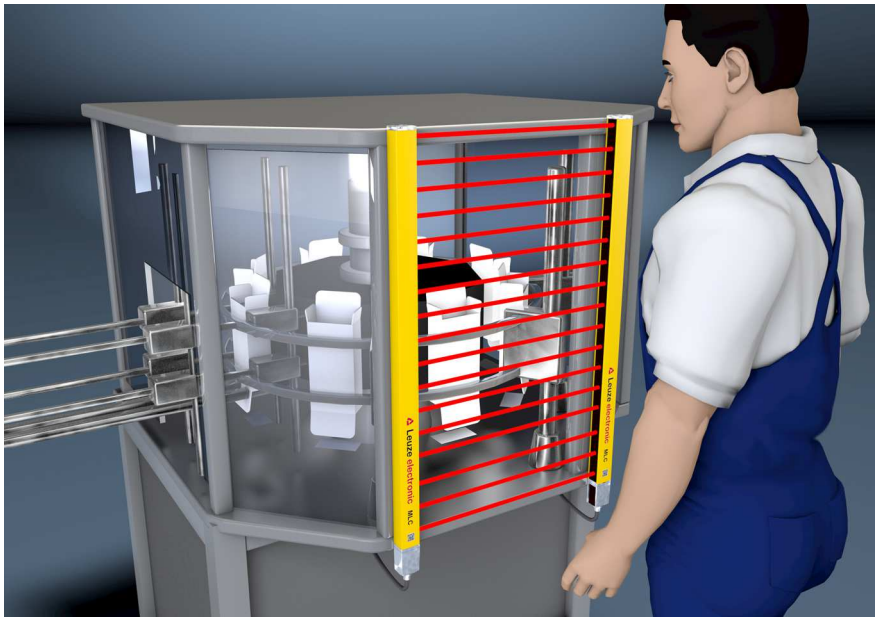

Fig. 5.1: Point of operation guarding protects reaching into the danger zone, e.g. for cartoners or filling systems

Fig. 5.2: Point of operation guarding protects reaching into the danger zone, e.g. for a pick & place robot application

5.2 Access guarding

Safety sensors with up to 90 mm resolution are used for access guarding into danger zones. They detect people only upon entry into the danger zone, i.e., they do not detect parts of a person or whether a person is present in the danger zone.

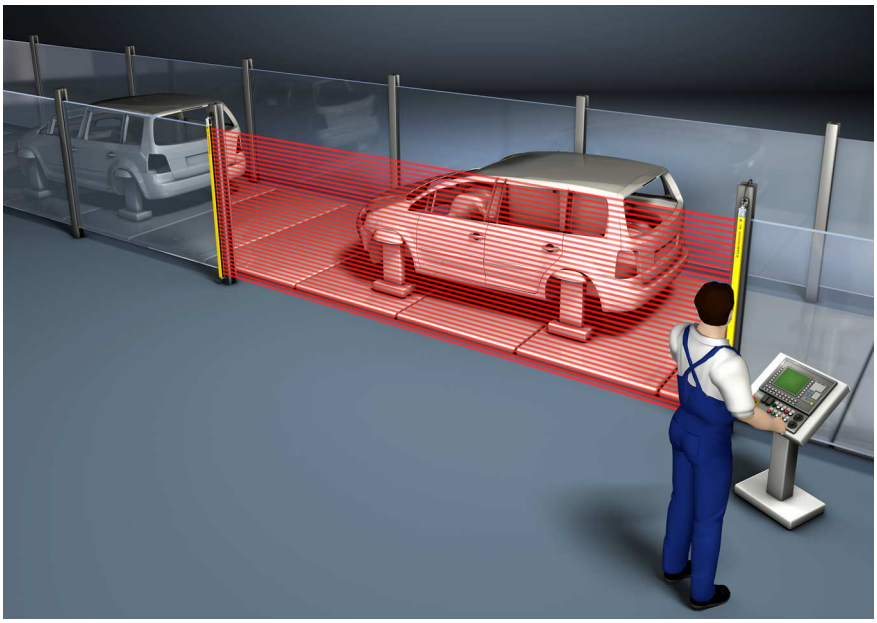

Fig. 5.3: Access guarding on a transfer path

5.3 Danger zone guarding

Safety light curtains can be used in horizontal arrangement for danger zone guarding - either as stand-alone device for presence monitoring or as stepping behind protection for presence monitoring e.g. in combination with a vertically-arranged safety sensor. Depending on the mounting height, resolutions of 40 or 90 mm are used (Link destination: order guide and accessories).

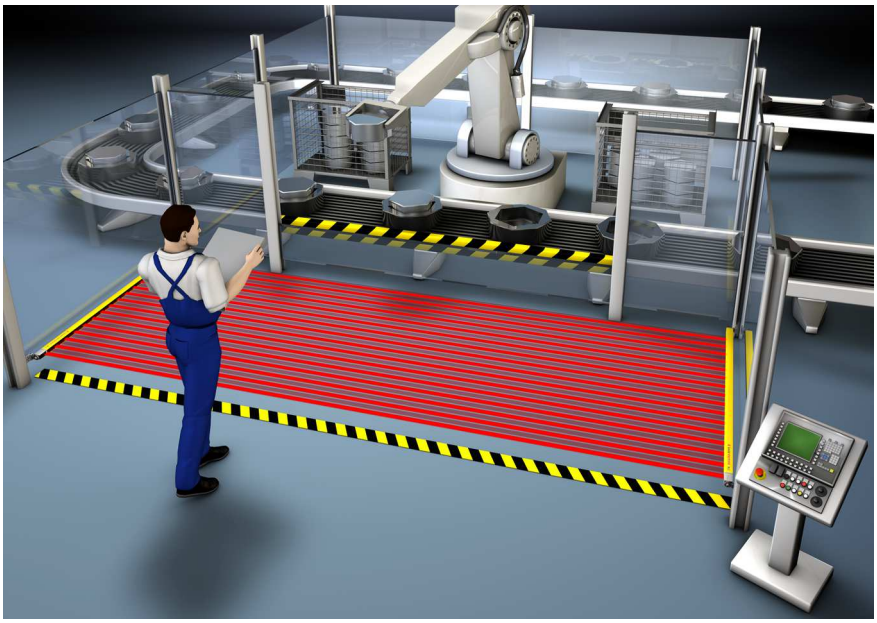

Fig. 5.4: Danger zone guarding on a robot

6 Mounting

WARNING

Improper mounting may result in serious injury!

The protective function of the safety sensor is only ensured if appropriately and professionally mounted for the respective, intended area of application.

- Only allow the safety sensor to be installed by qualified persons (see chapter 2.2 "Necessary competencies").
- Maintain the necessary safety distances (see chapter 6.1.1 "Calculation of safety distance S").
- Make sure that stepping behind, crawling under or stepping over the protective device is reliably ruled out and reaching under, over or around is taken into account in the safety distance, if applicable with additional distance C_{RO} corresponding to ISO 13855.
- Take measures to prevent that the safety sensor can be used to gain access to the danger zone, e.g. by stepping or climbing into it.
- Observe the relevant standards, regulations and these instructions.
- Clean the transmitter and receiver at regular intervals: environmental conditions (see chapter 14 "Technical data"), care (see chapter 10 "Maintenance").
- After mounting, check the safety sensor for proper function.

6.1 Arrangement of transmitter and receiver

Optical protective devices can only perform their protective function if they are mounted with adequate safety distance. When mounting, all delay times must be taken into account, such as the response times of the safety sensor and control elements as well as the stopping time of the machine, among others.

The following standards specify calculation formulas:

- IEC 61496-2, "Active optoelectronic protective devices": distance of the reflecting surfaces/deflecting mirrors
- ISO 13855, "Safety of machines - The positioning of protective equipment in respect of approach speeds of parts of the human body": mounting situation and safety distances

NOTICE

In accordance with ISO 13855, with a vertical protective field, it is possible to pass under beams over 300 mm or pass over beams under 900 mm. If the protective field is horizontal, climbing on the safety sensor must be prevented through suitable installation or with covers and the like.

6.1.1 Calculation of safety distance S

General formula for calculating the safety distance S of an Optoelectronic Protective Device acc. to ISO 13855

$$S = K \cdot T + C$$

S	[mm]	=	Safety distance
K	[mm/s]	=	Approach speed
T	[s]	=	Total time of the delay, sum from ($t_a + t_i + t_m$)
t_a	[s]	=	Response time of the protective device
t_i	[s]	=	Response time of the safety relay
t_m	[s]	=	Stopping time of the machine
C	[mm]	=	Additional distance to the safety distance

NOTICE	
	If longer stopping times are determined during regular inspections, an appropriate additional time must be added to t_m.

6.1.2 Calculation of safety distance if protective fields act orthogonally to the approach direction

With vertical protective fields, ISO 13855 differentiates between

- S_{RT}: safety distance concerning access **through** the protective field
- S_{RO}: safety distance concerning access **over** the protective field

The two values are distinguished by the way additional distance C is determined:

- C_{RT}: from a calculation formula or as a constant (see chapter 6.1.1 "Calculation of safety distance S")
- C_{RO}: from the following table “Reaching over the vertical protective field of electro-sensitive protective equipment (excerpt from ISO 13855)”

The larger of the two values S_{RT} and S_{RO} is to be used.

Calculation of safety distance S_{RT} acc. to ISO 13855 when access occurs through the protective field:

Calculation of safety distance S_{RT} for point of operation guarding

$$S_{RT} = K \cdot T + C_{RT}$$

S_{RT}	[mm]	=	Safety distance
K	[mm/s]	=	Approach speed for point of operation guarding with approach reaction and normal approach direction to the protective field (resolution 14 to 40 mm): 2000 mm/s or 1600 mm/s, when S_{RT} > 500 mm
T	[s]	=	Total time of the delay, sum from (t_a + t_i + t_m)
t_a	[s]	=	Response time of the protective device
t_i	[s]	=	Response time of the safety relay
t_m	[s]	=	Stopping time of the machine
C_{RT}	[mm]	=	Additional distance for point of operation guarding with approach reaction with resolutions of 14 to 40 mm, d = resolution of protective device C_{RT} = 8 × (d - 14) mm

Calculation example

The feeding-in area in a press with a stopping time (including press Safety PLC) of 190 ms is to be safeguarded with a safety light curtain with 20 mm of resolution and 1200 mm of protective field height. The safety light curtain has a response time of 22 ms.

↳ Calculate safety distance S_{RT} using the formula acc. to ISO 13855.

$$S_{RT} = K \cdot T + C_{RT}$$

K	[mm/s]	=	2000
T	[s]	=	(0.022 + 0.190)
C_{RT}	[mm]	=	8 × (20 - 14)
S_{RT}	[mm]	=	2000 mm/s × 0.212 s + 48 mm
S_{RT}	**[mm]**	**=**	**472**

S_{RT} is smaller than 500 mm; this is why the calculation may **not** be repeated with 1600 mm/s.

NOTICE	
	Implement the stepping behind protection required here, e.g., through the use of an additional or cascaded safety sensor for area protection.

Calculation of safety distance S_{RT} for access guarding

$$S_{RT} = K \cdot T + C_{RT}$$

S_{RT}	[mm]	=	Safety distance
K	[mm/s]	=	Approach speed for access guarding with approach direction orthogonal to the protective field: 2000 mm/s or 1600 mm/s, when S_{RT} > 500 mm
T	[s]	=	Total time of the delay, sum from (t_a + t_i + t_m)
t_a	[s]	=	Response time of the protective device
t_i	[s]	=	Response time of the safety relay
t_m	[s]	=	Stopping time of the machine
C_{RT}	[mm]	=	Additional distance for access guarding with approach reaction with resolutions of 14 to 40 mm, d = resolution of protective device C_{RT} = 8 × (d - 14) mm. Additional distance for access guarding for resolutions > 40 mm: C_{RT} = 850 mm (standard value for arm length)

Calculation example

Access to a robot with a stopping time of 250 ms is to be safeguarded with a safety light curtain with 90 mm of resolution and 1500 mm of protective field height whose response time is 6 ms. The safety light curtain directly switches the contactors whose response time is contained in the 250 ms. An additional interface therefore does not have to be taken into consideration.

↳ Calculate safety distance S_{RT} using the formula acc. to ISO 13855.

$$S_{RT} = K \cdot T + C_{RT}$$

K	[mm/s]	=	1600
T	[s]	=	(0.006 + 0.250)
C_{RT}	[mm]	=	850
S_{RT}	[mm]	=	1600 mm/s × 0.256 s + 850 mm
S_{RT}	**[mm]**	**=**	**1260**

This safety distance is not available in the application. This is why a new calculation is done with a safety light curtain with 40 mm of resolution (response time = 14 ms):

↳ Re-calculate safety distance S_{RT} using the formula acc. to ISO 13855.

$$S_{RT} = K \cdot T + C_{RT}$$

K	[mm/s]	=	1600
T	[s]	=	(0.014 + 0.250)
C_{RT}	[mm]	=	8 ×~ (40 - 14)
S_{RT}	[mm]	=	1600 mm/s × 0.264 s + 208 mm
S_{RT}	**[mm]**	**=**	**631**

The safety light curtain with a 40 mm resolution is thus suitable for this application.

	NOTICE
	For the calculation with K = 2000 mm/s, safety distance S_{RT} equals 736 mm. The adoption of approach speed K = 1600 mm/s is therefore permitted.

Calculation of safety distance S_{Ro} acc. to ISO 13855 when protective field is accessed from above:

Calculation of safety distance S_{Ro} for point of operation guarding

$$S_{RO} = K \cdot T + C_{RO}$$

S_{RO}	[mm]	=	Safety distance
K	[mm/s]	=	Approach speed for point of operation guarding with approach reaction and normal approach direction to the protective field (resolution 14 to 40 mm): 2000 mm/s or 1600 mm/s, when S_{RO} > 500 mm
T	[s]	=	Total time of the delay, sum from (t_a + t_i + t_m)
t_a	[s]	=	Response time of the protective device
t_i	[s]	=	Response time of the safety relay
t_m	[s]	=	Stopping time of the machine
C_{RO}	[mm]	=	Additional distance in which a body part can move towards the protective device before the protective device triggers: value (see the following table “Reaching over the vertical protective field of electro-sensitive protective equipment (excerpt from ISO 13855)”).

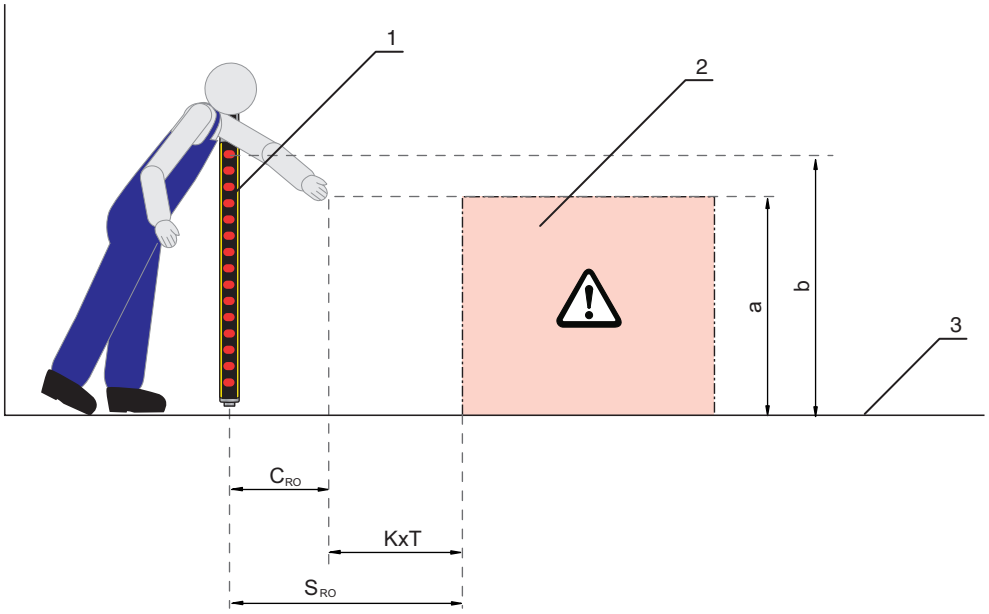

1	Safety sensor
2	Danger zone
3	Floor
a	Height of the point of operation
b	Height of the upper beam of the safety sensor

Fig. 6.1: Additional distance to the safety distance when reaching over and under

Tab. 6.1: Reaching over the vertical protective field of electro-sensitive protective equipment(excerpt from ISO 13855)

Height a of the point of operation [mm]	Height b of the upper edge of the protective field of the electro-sensitive protective equipment											
	900	1000	1100	1200	1300	1400	1600	1800	2000	2200	2400	2600
	Additional distance C_{RO} to the danger zone [mm]											
2600	0	0	0	0	0	0	0	0	0	0	0	0
2500	400	400	350	300	300	300	300	300	250	150	100	0
2400	550	550	550	500	450	450	400	400	300	250	100	0
2200	800	750	750	700	650	650	600	550	400	250	0	0
2000	950	950	850	850	800	750	700	550	400	0	0	0
1800	1100	1100	950	950	850	800	750	550	0	0	0	0
1600	1150	1150	1100	1000	900	850	750	450	0	0	0	0
1400	1200	1200	1100	1000	900	850	650	0	0	0	0	0
1200	1200	1200	1100	1000	850	800	0	0	0	0	0	0
1000	1200	1150	1050	950	750	700	0	0	0	0	0	0
800	1150	1050	950	800	500	450	0	0	0	0	0	0
600	1050	950	750	550	0	0	0	0	0	0	0	0
400	900	700	0	0	0	0	0	0	0	0	0	0
200	600	0	0	0	0	0	0	0	0	0	0	0
0	0	0	0	0	0	0	0	0	0	0	0	0

Depending on the specified values you can work with the above-mentioned table in three ways:

1. Given are:
   - Height a of the point of operation
   - Distance S of the point of operation from the safety sensor, and additional distance C_{RO}

To be determined is the required height b of the upper beam of the safety sensor and thereby its protective field height.

↳ Look for the line with the specification of the point of operation height in the left column.

↳ In this line, look for the column with the next highest specification for additional distance C_{RO}.

⇨ The required height of the upper beam of the safety sensor is up top in the column head.

2. Given are:
   - Height a of the point of operation
   - Height b of the upper beam of the safety sensor

To be determined is the required distance S of the safety sensor to the point of operation and thereby additional distance C_{RO}.

↳ In the column head, look for the column with the next lowest entry for the height of the upper beam of the safety sensor.

↳ Look for the line with the next highest specification of the point of operation height a in this column.

⇨ In the intersection point of the line and the column, you will find additional distance C_{RO}.

3. Given are:
   - Distance S of the point of operation from the safety sensor, and additional distance $C_{RO.}$
   - Height b of the upper beam of the safety sensor

To be determined is the permitted height a of the point of operation.

↳ In the column head, look for the column with the next lowest entry for the height of the upper beam of the safety sensor.

↳ Look for the next lowest value for real additional distance C_{RO} in this column.

⇨ In this line, go to the left column: here you will find the permitted height of the point of operation.

↳ Now calculate safety distance S using the general formula acc. to ISO 13855 (see chapter 6.1.1 "Calculation of safety distance S").

⇨ The larger of the two values S_{RT} and S_{RO} is to be used.

Calculation example

The feeding-in area in a press with a stopping time of 130 ms is to be safeguarded with a safety light curtain with 20 mm of resolution and 600 mm of protective field height. The response time of the safety light curtain is 12 ms; the press Safety PLC has a response time of 40 ms.

The safety sensor can be reached over. The upper edge of the protective field is located at a height of 1400 mm; the point of operation is located at a height of 1000 mm

Additional distance C_{RO} to the point of operation is 700 mm (see table “Reaching over the vertical protective field of electro-sensitive protective equipment (excerpt from ISO 13855)”).

↳ Calculate safety distance S_{RO} using the formula acc. to ISO 13855.

$$S_{RO} = K \cdot T + C_{RO}$$

K	[mm/s]	=	2000
T	[s]	=	(0.012 + 0.040 + 0.130)
C_{RO}	[mm]	=	700
S_{RO}	[mm]	=	2000 mm/s × 0.182 s + 700 mm
S_{RO}	**[mm]**	**=**	**1064**

S_{RO} is larger than 500 mm; this is why the calculation may be repeated with approach speed 1600 mm/s:

$$S_{RO} = K \cdot T + C_{RO}$$

K	[mm/s]	=	1600
T	[s]	=	(0.012 + 0.040 + 0.130)
C_{RO}	[mm]	=	700
S_{RO}	[mm]	=	1600 mm/s × 0.182 s + 700 mm
S_{RO}	**[mm]**	**=**	**992**

	NOTICE
	Depending on the machine construction, stepping behind protection, e.g. using a second horizontally arranged safety light curtain, is necessary. In most cases, it will be more appropriate to choose a longer safety light curtain which makes the additional distance C_{RO} equal to 0.

6.1.3 Calculation of safety distance S for parallel approach to the protective field

Calculation of safety distance S for danger zone guarding

$$S = K \cdot T + C$$

S	[mm]	=	Safety distance
K	[mm/s]	=	Approach speed for danger zone guarding with approach direction parallel to the protective field (resolution up to 90 mm): 1600 mm/s
T	[s]	=	Total time of the delay, sum from (t_a + t_i + t_m)
t_a	[s]	=	Response time of the protective device
t_i	[s]	=	Response time of the safety relay
t_m	[s]	=	Stopping time of the machine
C	[mm]	=	Additional distance for danger zone guarding with approach reaction H = height of the protective field, H_{min} = minimum installation height permitted, but no smaller than 0, d = resolution of the protective device C = 1200 mm - 0.4 × H; H_{min} = 15 × (d - 50)

Calculation example

The danger zone in front of a machine with a stopping time of 140 ms is to be safeguarded as close to the floor height as possible using a horizontal safety light curtain as a replacement for a PS mat. Installation height H_{min} can be = 0 - additional distance C to the safety distance is then 1200 mm. The shortest possible safety sensor is to be used; the first value to be selected is to be 1350 mm.

The receiver with 40 mm of resolution and 1350 mm protective field height has a response time of 13 ms, an additional relay interface a response time of 10 ms.

↳ Calculate safety distance S_{RO} using the formula acc. to ISO 13855.

$$S = K \cdot T + C$$

K	[mm/s]	=	1600
T	[s]	=	(0.140 + 0.013 + 0.010)
C	[mm]	=	1200
S	[mm]	=	1600 mm/s × 0.163 s + 1200 mm
S	**[mm]**	**=**	**1461**

The safety distance of 1350 mm is not sufficient; 1460 mm are necessary.

This is why the calculation is repeated with a protective field height of 1500 mm. The response time is now 14 ms.

↳ Re-calculate safety distance S_{RO} using the formula acc. to ISO 13855.

$$S = K \cdot T + C$$

K	[mm/s]	=	1600
T	[s]	=	(0.140 + 0.014 + 0.010)
C	[mm]	=	1200
S	[mm]	=	1600 mm/s × 0.164 s + 1200 mm
S	**[mm]**	**=**	**1463**

A suitable safety sensor has been found; its protective field height is 1500 mm.

6.1.4 Minimum distance to reflective surfaces

WARNING

Failure to maintain minimum distances to reflective surfaces may result in serious injury!

Reflective surfaces can indirectly deflect the transmitter beams to the receiver. In this case, interruption of the protective field is not detected.

- Determine the minimum distance a (see figure below).
- Make certain that all reflective surfaces are the necessary minimum distance away from the protective field according to IEC 61496-2 (see the following diagram “Minimum distance to reflective surfaces as a function of the protective field width”).
- Check that reflective surfaces do not impair the detection capability of the safety sensor before start-up and at appropriate intervals.

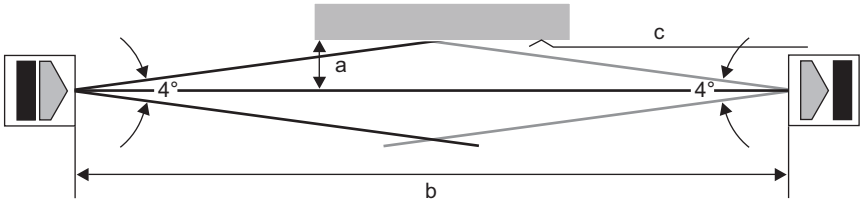

a Required minimum distance to reflective surfaces [mm]
b Protective field width [m]
c Reflective surface

Fig. 6.2: Minimum distance to reflective surfaces depending on protective field width

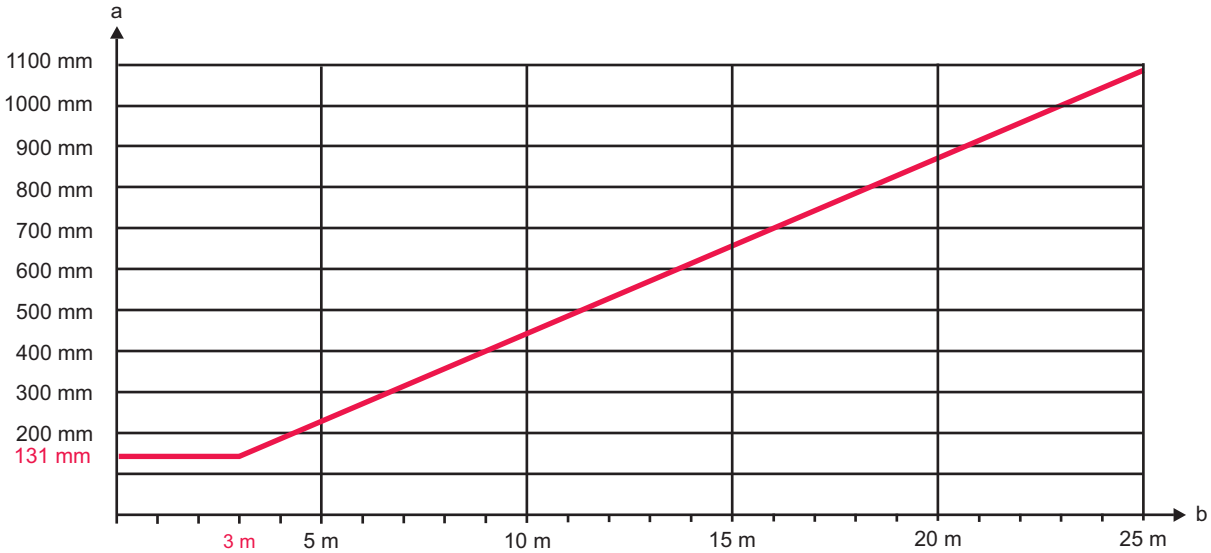

a Required minimum distance to reflective surfaces [mm]
b Protective field width [m]

Fig. 6.3: Minimum distance to reflective surfaces as a function of the protective field width

Tab. 6.2: Formula for calculating the minimum distance to reflective surfaces

Distance (b) transmitter-receiver	Calculation of the minimum distance (a) to reflective surfaces
b ≤ 3 m	a [mm] = 131
b > 3 m	a [mm] = tan(2.5°) × 1000 × b [m] = 43.66 × b [m]

6.1.5 Preventing mutual interference between adjacent devices

If a receiver is located in the beam path of an adjacent transmitter, optical crosstalk, and thus erroneous switching and failure of the protective function, may result.

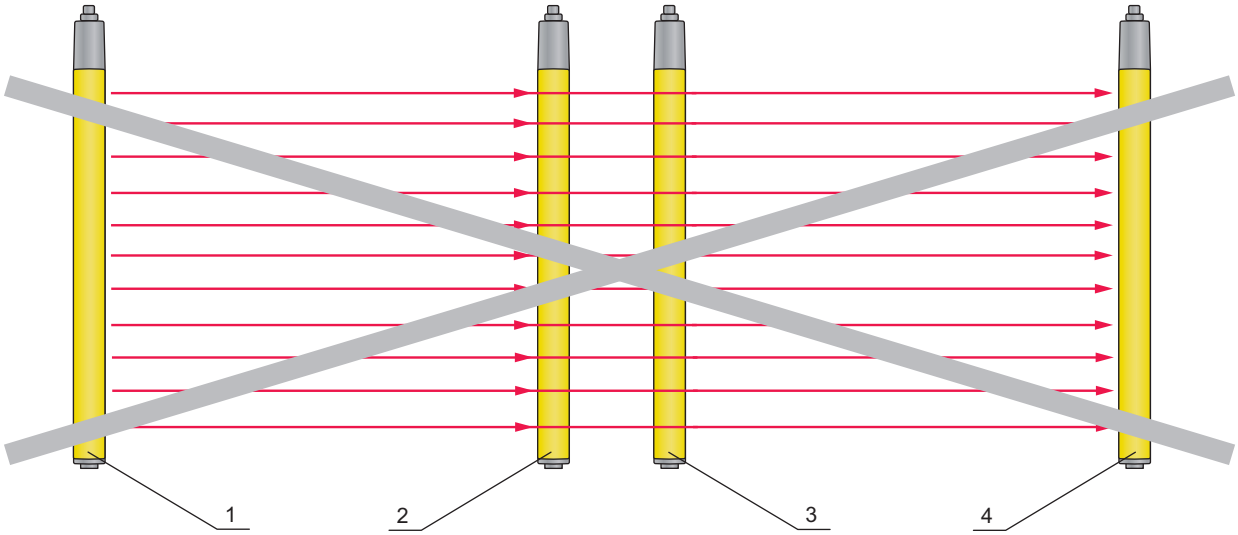

Fig. 6.4: Optical crosstalk between adjacent safety sensors (transmitter 1 influences receiver 2) due to incorrect mounting

1 Transmitter 1
2 Receiver 1
3 Transmitter 2
4 Receiver 2

NOTICE

Possible impairment of the availability due to systems mounted close to each other!

The transmitter of one system can influence the receiver of the other system.

- Prevent optical crosstalk between adjacent devices.

- Mount adjacent devices with a shield between them or install a dividing wall to prevent mutual interference.
- Mount the adjacent devices opposite from one another to prevent mutual interference.

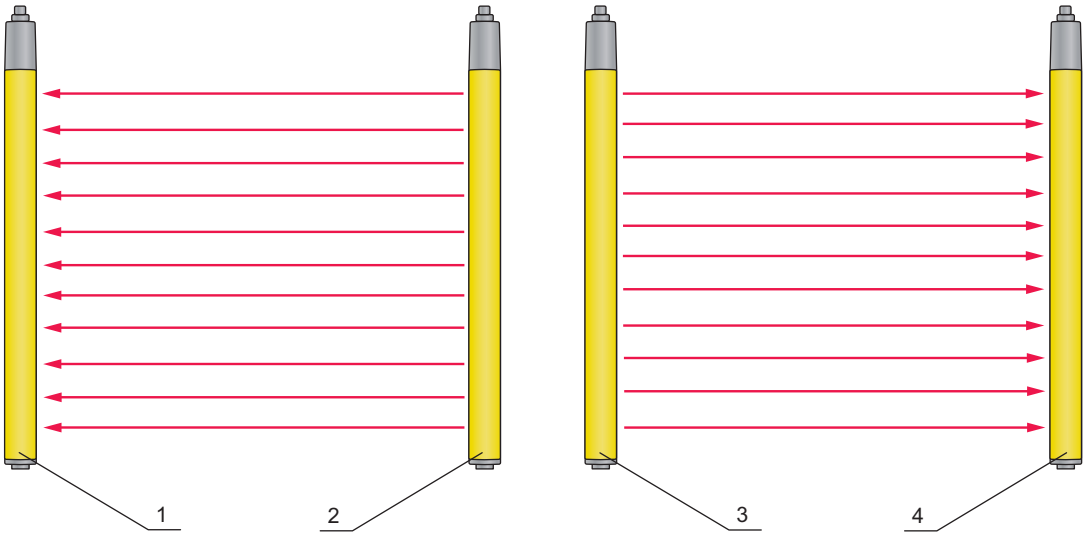

Fig. 6.5: Opposite mounting

1 Receiver 1
2 Transmitter 1
3 Transmitter 2
4 Receiver 2

In addition to design characteristics, the safety sensor offers functions that can remedy this:

- Selectable transmission channels (see chapter 4.3 "Transmission channel changeover")
- Range reduction (see chapter 4.4 "Operating range selection")
- Also: opposite mounting

6.2 Mounting the safety sensor

Proceed as follows:

- Select the type of fastening, e.g. sliding blocks (see chapter 6.2.3 "Fastening via BT-NC60 sliding blocks").
- Have a suitable tool at hand and mount the safety sensor in accordance with the notices regarding the mounting locations (see chapter 6.2.1 "Suitable mounting locations").
- If possible, affix safety notice stickers on the mounted safety sensor or device column (included in delivery contents).

After mounting, you can electrically connect (see chapter 7 "Electrical connection"), start up, align (see chapter 8 "Starting up the device"), and test (see chapter 9.1 "Before commissioning and following modifications") the safety sensor.

6.2.1 Suitable mounting locations

Area of application: Mounting

Tester: Technician who mounts the safety sensor

Tab. 6.3: Checklist for mounting preparations

Check:	Yes	No
Do the protective field height and dimensions satisfy the requirements of ISO 13855?		
Is the safety distance to the point of operation maintained (see chapter 6.1.1 "Calculation of safety distance S")?		
Is the minimum distance to reflective surfaces maintained (see chapter 6.1.4 "Minimum distance to reflective surfaces")?		
Is it impossible for safety sensors that are mounted next to one another to mutually interfere with one another (see chapter 6.1.5 "Preventing mutual interference between adjacent devices")?		
Can the point of operation or the danger zone only be accessed through the protective field?		
Has bypassing the protective field by crawling under, reaching over, or jumping over been prevented or has corresponding additional distance C_{RO} in accordance with ISO 13855 been observed?		
Is stepping behind the protective device prevented or is mechanical protection available?		
Do the transmitter and receiver connections point in the same direction?		
Can the transmitter and receiver be fastened in such a way that they cannot be moved and turned?		
Is the safety sensor accessible for testing and replacing?		
Is it impossible to actuate the reset button from within the danger zone?		
Can the entire danger zone be seen from the installation site of the reset button?		
Can reflection caused by the installation site be ruled out?		

NOTICE

If you answer one of the items on the checklist above with **no**, the mounting location must be changed.

6.2.2 Definition of directions of movement

The following terms for alignment movements of the safety sensor around one of its axes are used:

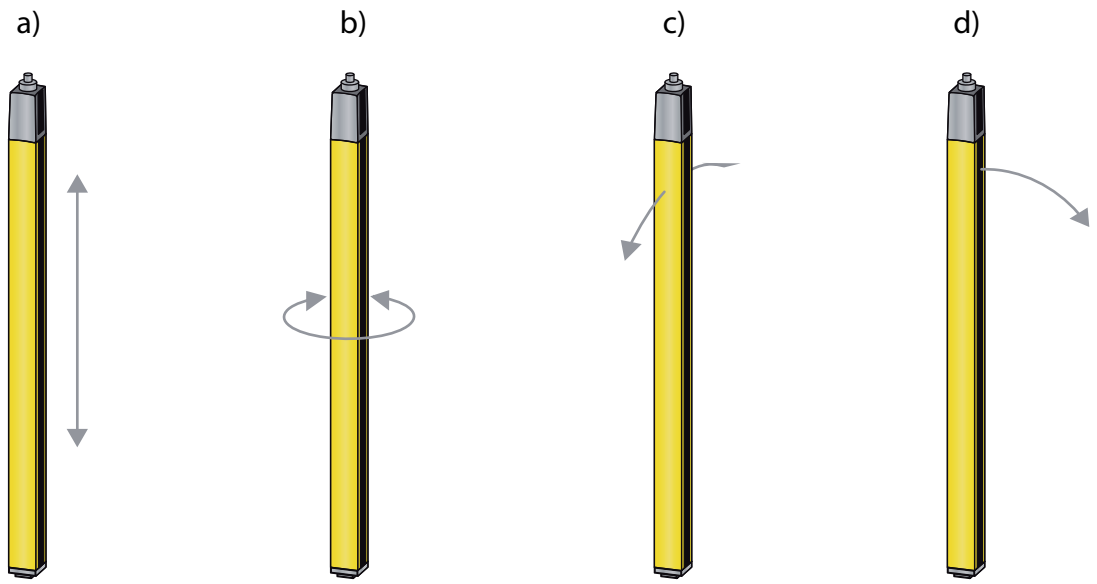

a	Sliding: movement along the longitudinal axis
b	Turning: movement around the longitudinal axis
c	Tilting: lateral turning movement diagonal to the front screen
d	Pitching: lateral turning movement in the direction of the front screen

Fig. 6.6: Directions of movement during alignment of the safety sensor

6.2.3 Fastening via BT-NC60 sliding blocks

By default, transmitter and receiver are delivered with 2 BT-NC60 sliding blocks each in the side slot. This makes fastening the safety sensor to the machine or system to be safeguarded easy via four M6 screws. Sliding in the direction of slot to set the height is possible, but turning, tilting and pitching is not.

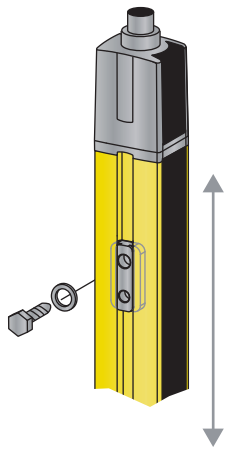

Fig. 6.7: Mounting via sliding blocks BT-NC60

6.2.4 Fastening via BT-2HF swivel mount

With the swivel mount (see chapter 15 "Order guide and accessories"), sold separately, the safety sensor can be aligned as follows:

- Sliding through the vertical threaded holes in the wall plate of the swivel mount
- Turning by 360° around the longitudinal axis by fixing on the screw-on cone
- Pitching in the direction of the protective field with horizontal threaded holes in the wall mounting
- Tilting around main axis

The wall mounting through threaded holes makes it possible to lift the mounting bracket after the screws have been loosened over the connection cap. Therefore, the mounting brackets do not need to be removed from the wall when exchanging the device. Loosening the screws is sufficient.

For increased mechanical loads, mounting brackets are also available in a vibration-damped version (BT-2HF-S) (see chapter 15 "Order guide and accessories").

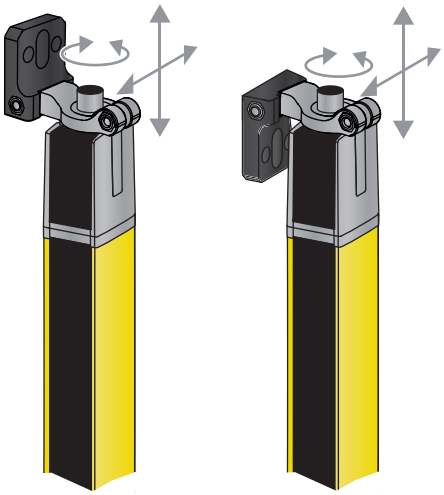

Fig. 6.8: Mounting via swivel mount BT-2HF

6.2.5 Fastening via BT-2SB10 swiveling mounting brackets

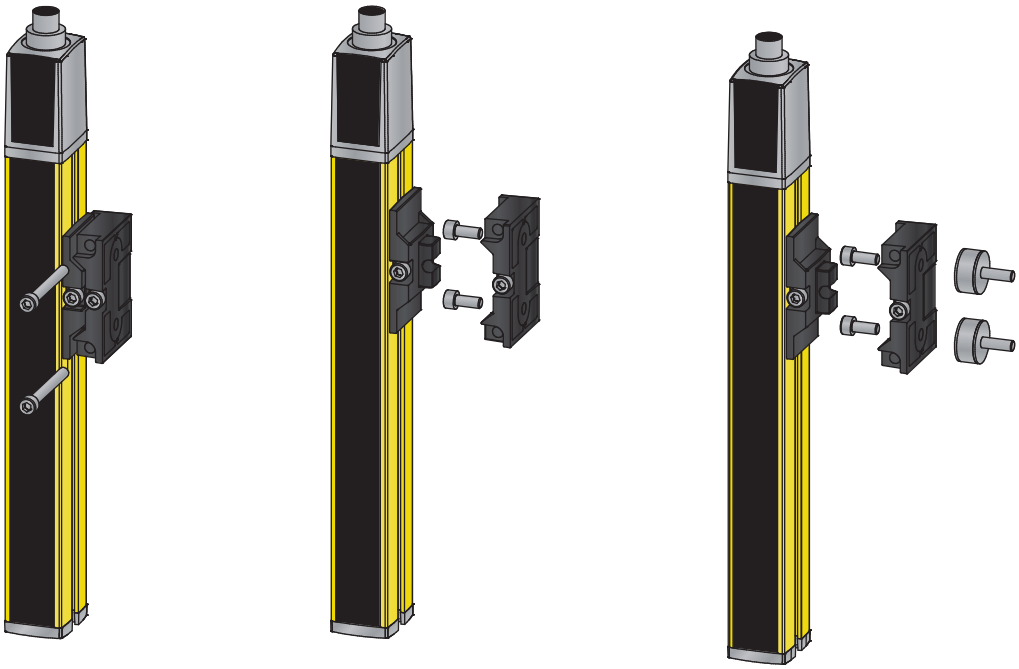

Fig. 6.9: Mounting via swiveling mounting brackets BT-2SB10

For larger protective field heights > 900 mm, the use of the BT-2SB10 swiveling mounting brackets is recommended (see chapter 15 "Order guide and accessories"). For increased mechanical requirements, these are also available as vibration-damped version (BT-2SB10-S). Depending on the installation situation, environmental conditions and protective field length (> 1200 mm), other mounting brackets may also be necessary.

6.2.6 One-sided mounting on the machine table

The safety sensor can be mounted directly on the machine table via an M5 screw on the blind hole in the end cap. On the other end, a BT-2HF swivel mount can be used, for example, so that turning movements for alignment are possible despite the fact that the sensor is mounted on one side. The full resolution of the safety sensor is thus preserved on all points of the protective field down to the machine table.

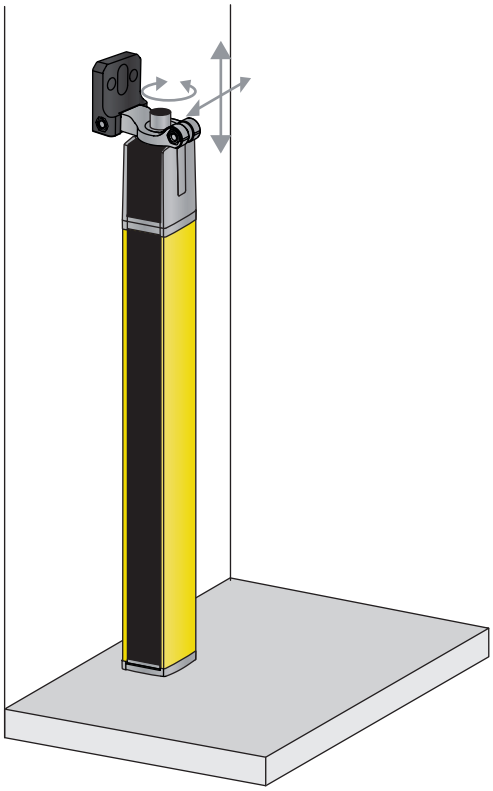

Fig. 6.10: Mounting directly on the machine table

WARNING	
	Impairment of the protective function due to reflections on the machine table! ↳ Make sure that reflections on the machine table are prevented reliably. ↳ After mounting and every day after that, check the detection capability of the safety sensor in the entire protective field using a test rod (see chapter 9.3.1 "Checklist – periodically by the operator").

6.3 Mounting accessories

6.3.1 Deflecting mirror for multiple-side guarding

For multiple-side guarding, redirecting the protective field with one or two deflecting mirrors is economical. To do this, Leuze electronic supplies:

- The UM60 deflecting mirror for mounting on the machine in various lengths (see chapter 15 "Order guide and accessories")
- suitable BT-2UM60 swivel mounts
- UMC-1000-S2 … UMC-1900-S2 deflecting mirror columns with spring-damped base for free-standing floor mounting

The range is reduced by approx. 10 % per deflection. A laser alignment aid with red light laser is recommended for the alignment of transmitter and receiver (see chapter 8.3 "Aligning of deflecting mirrors with the laser alignment aid").

↳ Note that the distance between the transmitter and the first deflecting mirror cannot be larger than 3 m.

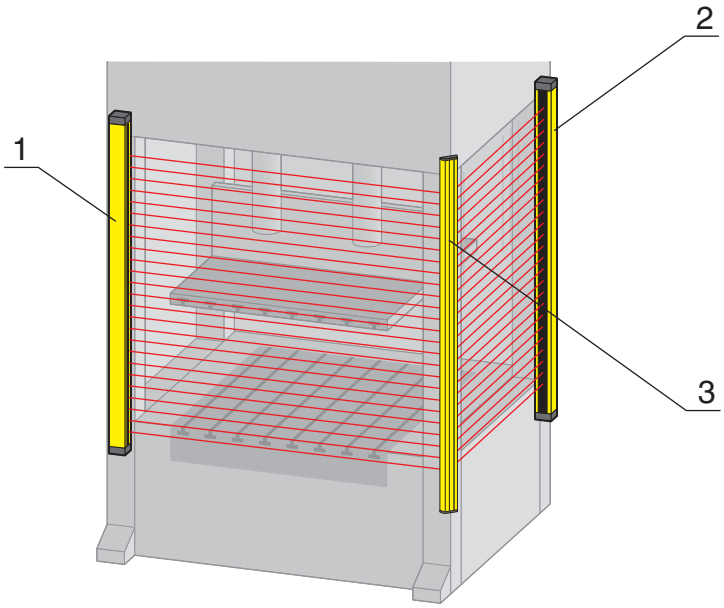

1	Transmitter
2	Receiver
3	UM60 deflecting mirrors

Fig. 6.11: Arrangement with deflecting mirror for 2-side guarding of a point of operation

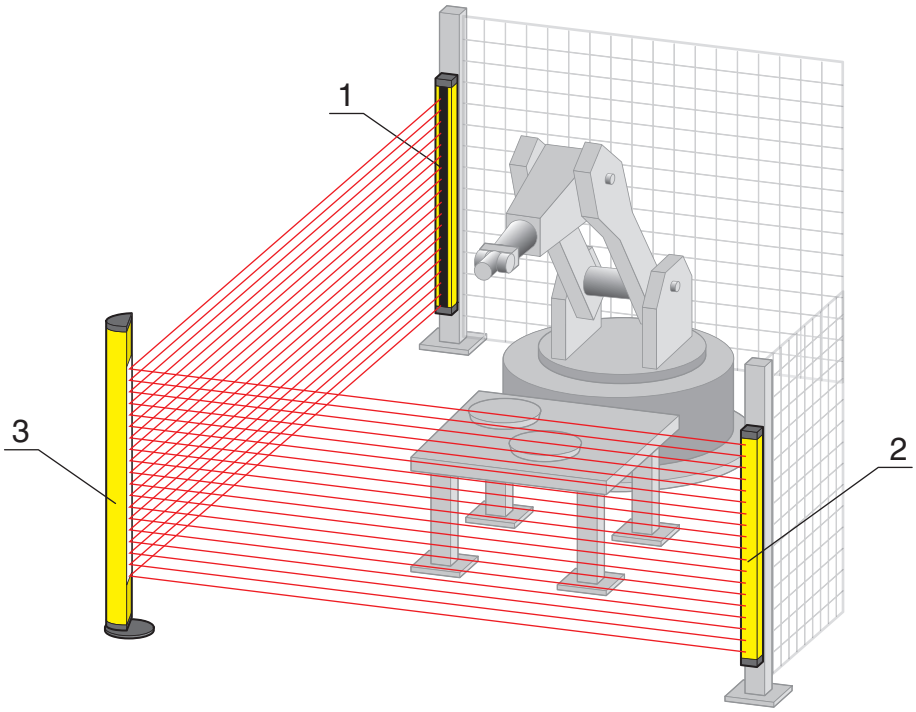

1	Transmitter
2	Receiver
3	UMC deflecting mirror columns

Fig. 6.12: Arrangement with deflecting mirror columns for two-side guarding of a point of operation

6.3.2 MLC-PS protective screen

If there is a risk that the protective plastic screens of the safety sensors could get damaged, e.g. by welding sparks, placing the additional, easy-to-replace MLC-PS protective screen in front of the safety sensors can protect the device protective screen and considerably increase the availability of the safety sensor. Mounting is performed using special clamp brackets, which are fastened on the lateral slot, via an Allen screw accessible from the front on each. The range of the safety sensor is reduced by approx. 5%; when protective screens are used on the transmitter and the receiver it is reduced by 10%. Mounting bracket sets with 2 and 3 clamp brackets are available.

	NOTICE
	If the length equals 1200 mm or higher, 3 clamp brackets are recommended.

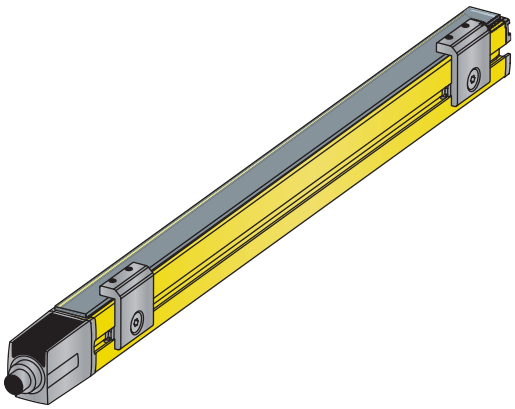

Fig. 6.13: MLC-PS protective screen fastened with MLC-2PSF clamp bracket

7 Electrical connection

WARNING

Faulty electrical connection or improper function selection may result in serious injury!

- Only allow qualified persons (see chapter 2.2 "Necessary competencies") to perform the electrical connection.
- Make certain that the safety sensor is protected against overcurrent.
- For access guarding, activate the start/restart interlock and make certain that it cannot be unlocked from within the danger zone.
- Select the functions so that the safety sensor can be used as intended (see chapter 2.1 "Intended use and foreseeable misuse").
- Select the safety-relevant functions for the safety sensor (see chapter 4 "Functions").
- Always loop both safety-related switching outputs OSSD1 and OSSD2 into the work circuit of the machine.
- Signal outputs must not be used for switching safety-relevant signals.

NOTICE

SELV/PELV!

- Acc. to EN 60204-1, the external power supply must demonstrate the ability to bridge short-term mains failures of up to 20 ms. The power supply unit must ensure safe mains separation (SELV/PELV) and a current reserve of at least 2 A.

NOTICE

Laying cables!

- Lay all connection cables and signal lines within the electrical installation space or permanently in cable ducts.
- Lay the cables and lines so that they are protected against external damages.
- For further information: see ISO 13849-2, Table D.4.

NOTICE

For special EMC stress, the use of shielded cables is recommended.

7.1 Pin assignment transmitter and receiver

7.1.1 MLC 500 transmitter

MLC 500 transmitters are equipped with a 5-pin M12 connector.

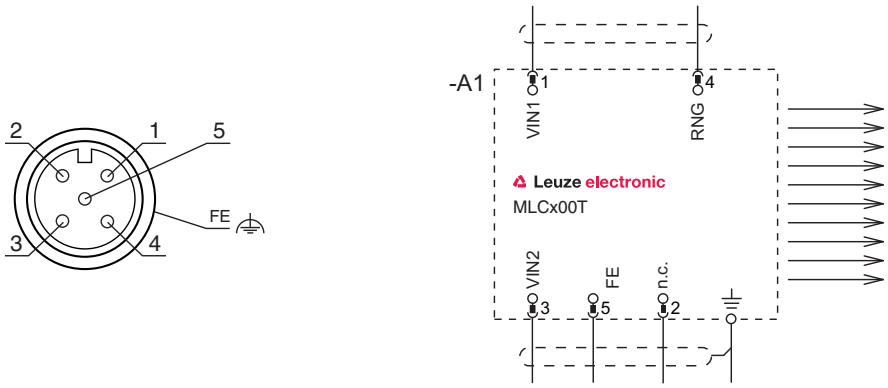

Fig. 7.1: Pin assignment and connection diagram transmitter

Tab. 7.1: Pin assignment transmitter

Pin	Core color (CB-M12-xx000E-5GF)	Transmitter
1	Brown	VIN1 - supply voltage
2	White	n.c.
3	Blue	VIN2 - supply voltage
4	Black	RNG - range
5	Gray	FE - functional earth, shield
FE		FE - functional earth, shield

The polarity of the supply voltage selects the transmission channel of the transmitter:

- VIN1 = +24 V, VIN2 = 0 V: transmission channel C1
- VIN1 = 0 V, VIN2 = +24 V: transmission channel C2

The wiring of pin 4 determines the transmitting power and thereby the range:

- Pin 4 = +24 V: standard range
- Pin 4 = 0 V or open: reduced range

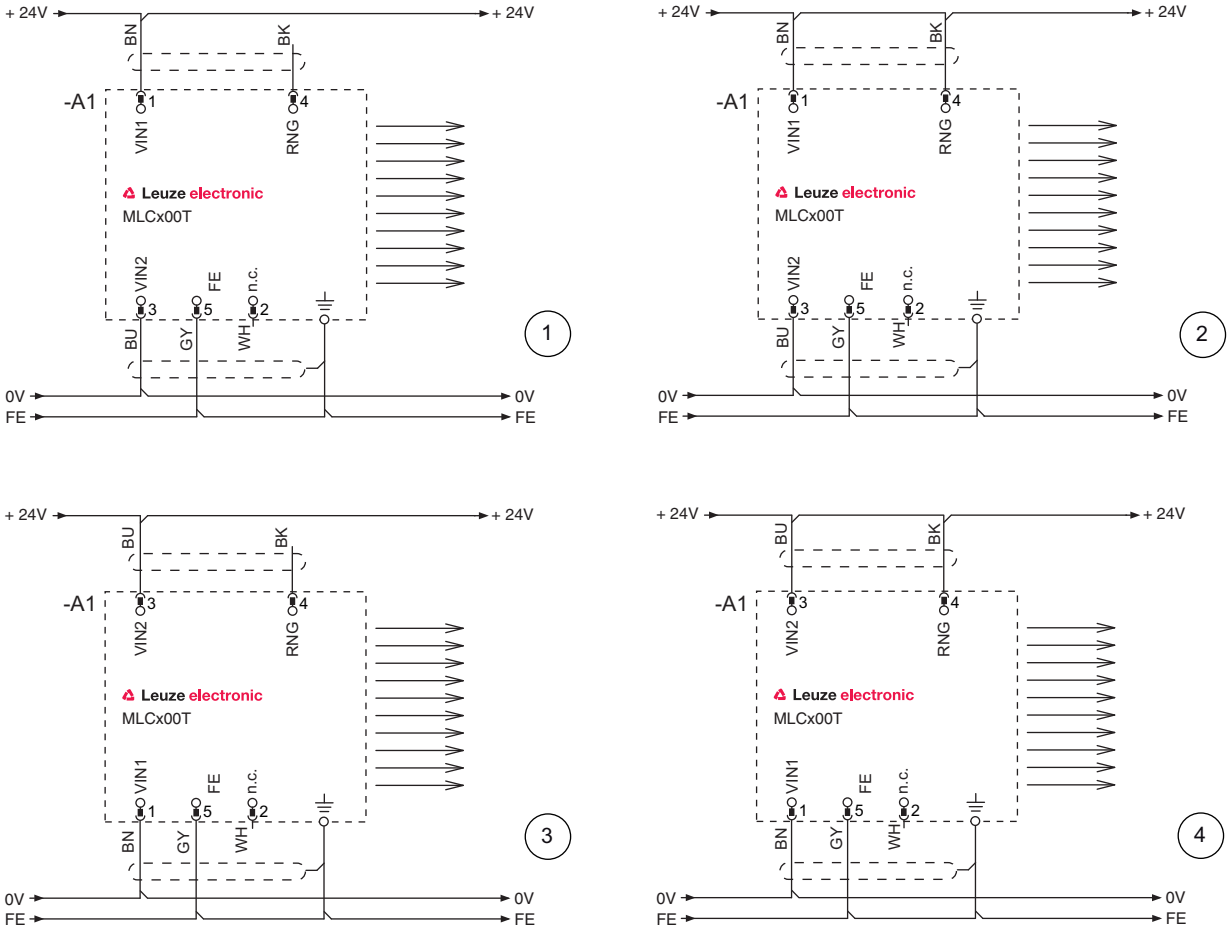

1 Transmission channel C1, reduced range
2 Transmission channel C1, standard range
3 Transmission channel C2, reduced range
4 Transmission channel C2, standard range

Fig. 7.2: Connection examples transmitter

7.1.2 MLC 520 receiver

MLC 520 receivers are equipped with a 8-pin M12 connector.

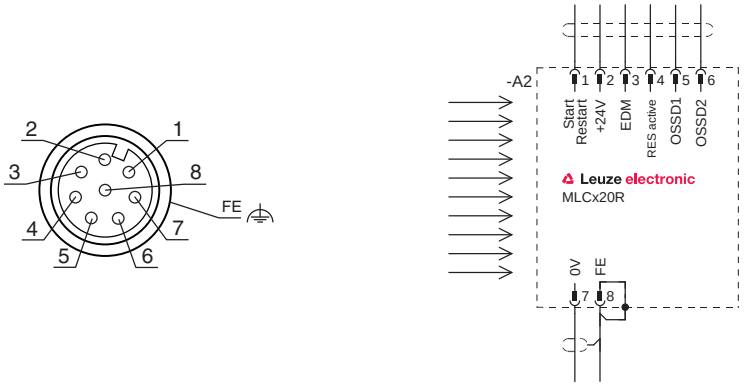

Fig. 7.3: Pin assignment and connection diagram receiver

Tab. 7.2: Pin assignment receiver

Pin	Core color (CB-M12-xx000E-5GF)	Receiver
1	White	IO1 - control input reset button, signal output Start/restart NO to 24 V DC Output reset button lamp (inverted OSSD)
2	Brown	VIN1 - supply voltage 24 V DC for transmission channel C1 0 V for transmission channel C2
3	Green	IN3 - control-input contactor monitoring (EDM) 24 V DC: without EDM 0 V: with EDM and feedback circuit closed High-impedance: with EDM and feedback circuit open
4	Yellow	IN4 - control input for start/restart interlock (RES) 24 V DC: with RES Bridge to pin 1: without RES (note: signal output remains functional)
5	Gray	OSSD1 - safety-related switching output
6	Pink	OSSD2 - safety-related switching output
7	Blue	VIN2 - supply voltage 0 V: for transmission channel C1 24 V DC for transmission channel C2
8	Red	FE - functional earth, shield Wired in device interior on the housing
FE		FE - functional earth, shield

The polarity of the supply voltage selects the transmission channel of the receiver:

- VIN1 = +24 V, VIN2 = 0 V: transmission channel C1
- VIN1 = 0 V, VIN2 = +24 V: transmission channel C2

7.2 Circuit diagram examples

7.2.1 MLC 520 circuit diagram example

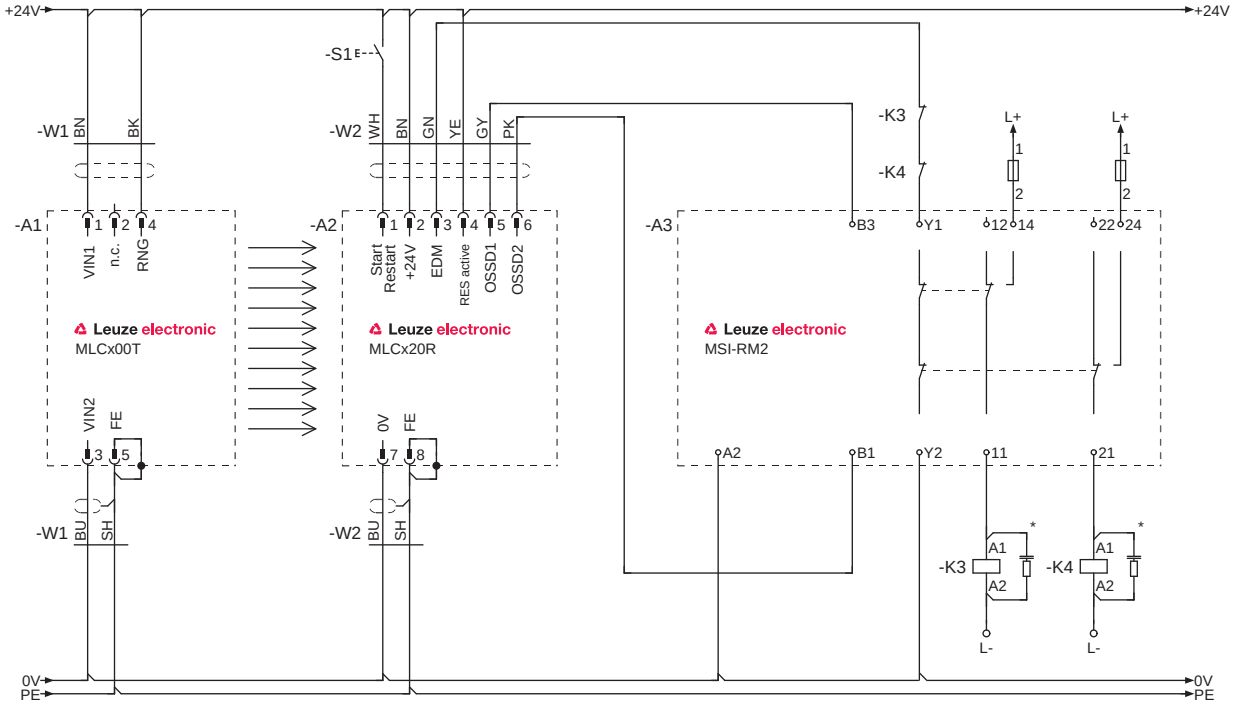

Fig. 7.4: Circuit diagram example with downstream MSI-RM2 safety relay

8 Starting up the device

WARNING	
	Improper use of the safety sensor may result in serious injury! ↳ Make certain that the entire device and the integration of the optoelectronic protective device were inspected by qualified and instructed persons (see chapter 2.2 "Necessary competencies"). ↳ Make certain that a dangerous process can only be started while the safety sensor is switched on.

Prerequisites:

- Safety sensor mounted (see chapter 6 "Mounting") and connected (see chapter 7 "Electrical connection") correctly
- Operating personnel were instructed in proper use
- Dangerous process is switched off, outputs of the safety sensor are disconnected, and the system is protected against being switched back on

↳ After start-up, check the function of the safety sensor (see chapter 9.1 "Before commissioning and following modifications").

8.1 Switching on

Requirements for the supply voltage (power supply unit):

- Reliable mains separation is ensured.
- Current reserve of at least 2 A is available.
- The RES function is activated - either in the safety sensor or in the downstream control.

↳ Switch on the safety sensor.

⇨ The safety sensor performs a self test and then displays the response time of the receiver (see chapter 3.3.2 "Operating indicators on the MLC 520 receiver").

Check operational readiness of sensor

↳ Check whether LED1 is permanently lit green or red (see chapter 3.3.2 "Operating indicators on the MLC 520 receiver").

⇨ The safety sensor is ready for use.

8.2 Aligning the sensor

NOTICE	
	Faulty or incorrect alignment may result in an operating fault! ↳ The alignment performed during start-up should only be performed by qualified persons (see chapter 2.2 "Necessary competencies"). ↳ Observe the data sheets and mounting instructions of the individual components.

Prealignment

Fasten the transmitter and receiver in a vertical or horizontal position and at the same height so that

- the front screens are directed at each other.
- the transmitter and receiver connections point in the same direction.
- the transmitter and receiver are arranged parallel to each other, i.e. they are the same distance from each other at the beginning and end of the device.

Alignment can be performed with a clear protective field by observing the LEDs and the 7-segment display (see chapter 3.3 "Display elements").

↳ Loosen the screws on the mounting brackets or device columns.

NOTICE
Loosen the screws only enough so that the devices can just be moved.

- Turn the receiver to the left until LED1 still flashes green but does not yet illuminate red. If necessary, you may have to turn the transmitter beforehand.
  - ⇨ The receiver with activated alignment display shows flashing segments in the 7-segment display.
- Note the value of the twist angle.
- Turn the receiver to the right until LED1 still flashes green but does not yet illuminate red.
- Note the value of the twist angle.
- Set the optimum position of the receiver. This lies in the middle of the two values for the twist angle to the left and right.
- Tighten the fastening screws of the receiver.
- Now align the transmitter according to the same method, paying attention to the display elements of the receiver while doing so (see chapter 3.3.2 "Operating indicators on the MLC 520 receiver").

NOTICE
Separate alignment aids such as the AC-ALM are also available as accessories.

8.3 Aligning of deflecting mirrors with the laser alignment aid

When using deflecting mirrors for multiple-side point of operation guarding and access guarding, an external laser alignment aid is recommended (see chapter 15 "Order guide and accessories").

NOTICE
With its clearly visible red light spot, the external laser alignment aid facilitates the correct setting of the transmitter and receiver as well as the deflecting mirrors.

- Fasten the laser alignment aid on top on the side groove of the transmitter. Mounting instructions are included in the accessories.
- Switch on the laser. Take note of the operating instructions of the laser alignment aid concerning the safety notices and the activation of the laser alignment aid.
- Loosen the mounting bracket of the transmitter and turn or tilt or pitch the device so that the laser spot strikes the top of the first deflecting mirror (see chapter 6.2.2 "Definition of directions of movement").
- Now set the laser below on the transmitter and adjust it so that the laser spot strikes the bottom of the deflecting mirror.
- Now set the laser back up top on the transmitter and check if the laser spot still strikes the top of the deflecting mirror. If it does not, the mounting height of the transmitter must be changed, if applicable.
- Repeat the process until the laser strikes the respective point of the deflecting mirror, both on top and on bottom.
- Turn, tilt or pitch the deflecting mirror so that the laser spot strikes either the next deflecting mirror or the receiver in both positions.
- Repeat the process in reverse after setting the laser alignment aid above and below on the receiver. The laser beam must strike the transmitter in both cases if the receiver has been correctly aligned.
- Remove the laser alignment aid from the safety sensor.
- ⇨ The protective field is free. LED1 on the receiver is permanently lit green. The OSSDs switch on.

8.4 Unlocking start/restart interlock

The reset button can be used to unlock the start/restart interlock. In this way, the responsible person can restore the ON state of the safety sensor following process interruptions (due to triggering of protective function, failure of the voltage supply).

	WARNING
	Premature unlocking of the start/restart interlock may result in serious injury! If the start/restart interlock is unlocked, the system can start up automatically. ↳ Before unlocking the start/restart interlock, make certain that no people are in the danger zone.

The red LED of the receiver illuminates as long as the restart is locked (OSSDs off). The yellow LED illuminates when the protective field is free and RES is activated (ready to be unlocked).

↳ Make certain that the active protective field is clear.

↳ Make certain that there are no people in the danger zone.

↳ Press and release the reset button within 0.15 to 4 s. The receiver switches to the ON state.

If you keep the reset button pressed longer than 4 s:

- Starting at 4 s: the reset request is ignored.
- Starting at 30 s: a +24 V short circuit is assumed on the reset input and the receiver switches to the interlock state (see chapter 11.1 "What to do in case of failure?").

9 Testing

NOTICE

- Safety sensors must be replaced at the end of their mission time (see chapter 14 "Technical data").
- Always exchange entire safety sensors.
- Observe any nationally applicable regulations regarding the tests.
- Document all tests in a comprehensible manner and include the configuration of the safety sensor along with the data for the safety- and minimum distances in the documentation.

9.1 Before commissioning and following modifications

WARNING

Unpredictable machine behavior during start-up may result in serious injury!

- Make certain that there are no people in the danger zone.

- Before they begin work, train the operators on their respective tasks. The training is the responsibility of the operating company.
- Attach notes regarding daily testing in the respective national language of the operator on the machine in a highly visible location, e.g. by printing out the corresponding chapter (see chapter 9.3 "Periodically by the operator").
- Test the electrical function and installation according to this document.

Acc. to IEC 62046 and national regulations (e.g. EU directive 2009/104/EC), tests are to be performed by competent persons (see chapter 2.2 "Necessary competencies") in the following situations:

- Prior to commissioning
- Following modifications to the machine
- After longer machine downtime
- Following retrofitting or new configuration of the machine

- As preparation, check the most important criteria for the safety sensor according to the following check-list (see chapter 9.1.1 "Checklist for integrator – to be performed prior to commissioning and following modifications"). Completing the checklist does not replace testing by competent persons (see chapter 2.2 "Necessary competencies")!
- ⇨ Not until proper function of the safety sensor is ascertained may it be integrated in the control circuit of the system.

9.1.1 Checklist for integrator – to be performed prior to commissioning and following modifications

NOTICE

Completing the checklist does not replace testing by a qualified person (see chapter 2.2 "Necessary competencies")!

- If you answer one of the items on the following check list with **no**, the machine must no longer be operated.
- IEC 62046 contains additional recommendations on testing protective devices.

Tab. 9.1: Checklist for integrator – to be performed prior to the initial start-up and following modifications

Check:	Yes	No	not applicable
Is the safety sensor operated acc. to the specific environmental conditions that are to be maintained (see chapter 14 "Technical data")?			
Is the safety sensor correctly aligned and are all fastening screws and connectors secure?			

Check:	Yes	No	not applicable
Are safety sensor, connection cables, connectors, protection caps and command devices undamaged and without any sign of manipulation?			
Does the safety sensor satisfy the required safety level (PL, SIL, category)?			
Are both safety-related switching outputs (OSSDs) integrated in the downstream machine control acc. to the required safety category?			
Are switching elements that are controlled by the safety sensor monitored according to the required safety level (PL, SIL, category) (e.g., contactors through EDM)?			
Are all points of operation near the safety sensor accessible only through the protective field of the safety sensor?			
Are the necessary additional protective devices in the immediate surroundings (e.g., safety guard) properly mounted and secured against tampering?			
If it is possible to be present undetected between the safety sensor and point of operation: is an assigned start/restart interlock functional?			
Is the command device for unlocking the start/restart interlock mounted in such a way that it cannot be reached from within the danger zone and so that the complete danger zone can be seen from the installation location?			
Has the maximum stopping time of the machine been measured and documented?			
Is the required safety distance maintained?			
Does interruption with a test object intended for this purpose cause the dangerous movement(s) to stop?			
Is the safety sensor effective during the entire dangerous movement(s)?			
Is the safety sensor effective in all relevant operating modes of the machine?			
Is start-up of dangerous movements reliably prevented if an active light beam or the protective field is interrupted with a test object intended for this purpose?			
Was the sensor detection capacity successfully tested (see chapter 9.3.1 "Checklist – periodically by the operator")?			
Were distances to reflective surfaces taken into account during configuration and no reflection bypasses subsequently detected?			
Are notices for regular testing of the safety sensor legible to the operator and are they located in a highly visible location?			
Are changes to the safety function (e.g. SPG, blanking, protective field switchover) not easy to achieve through tampering?			
Are settings that could result in an unsafe state possible only by means of key, password or tool?			
Are there incentives that pose stimulus for tampering?			
Were the operators instructed prior to starting work?			

9.2 To be performed periodically by competent persons

The reliable interaction of safety sensor and machine must be regularly tested by qualified persons (see chapter 2.2 "Necessary competencies") in order to detect changes to the machine or impermissible tampering with the safety sensor.

Acc. to IEC 62046 and national regulations (e.g., EU directive 2009/104/EC), tests of elements which are subject to wear must be performed by qualified persons (see chapter 2.2 "Necessary competencies") at regular intervals. Testing intervals may be regulated by nationally applicable regulations (recommendation acc. to IEC 62046: 6 months).

- Only allow testing to be performed by qualified persons (see chapter 2.2 "Necessary competencies").
- Observe the nationally applicable regulations and the time periods specified therein.
- As preparation, observe the checklist (see chapter 9.1 "Before commissioning and following modifications").

9.3 Periodically by the operator

The function of the safety sensor must be checked depending on the given risk according to the following checklist so that damages or prohibited tampering can be detected.

Depending on the risk assessment, the test cycle must be defined by the integrator or operating company (e.g., daily, on shift changes, ...) or is specified by national regulations or regulations of the employer's liability insurance association and may be dependent on the machine type.

Due to complex machines and processes, it may be necessary under certain circumstances to check some points at longer time intervals. Observe the classification in “Test at least” and “Test when possible”.

	NOTICE
	For larger distances between transmitter and receiver and when using deflecting mirrors, a second person may be necessary.

	WARNING
	Unpredictable machine behavior during the test may result in serious injury! - Make certain that there are no people in the danger zone. - Before they begin work, train the operators on their respective tasks and provide suitable test objects and an appropriate test instruction.

9.3.1 Checklist – periodically by the operator

NOTICE

↳ If you answer one of the items on the following check list with **no**, the machine must no longer be operated.

Tab. 9.2: Checklist – regular function test by trained operators/persons

Test at least:	Yes	No
Are safety sensor and connectors securely mounted and free of obvious signs of damage, changes or tampering?		
Were no obvious changes made to access or entry possibilities?		
Test the effectiveness of the safety sensor: • The LED 1 on the safety sensor must illuminate green (see chapter 3.3.2 "Operating indicators on the MLC 520 receiver"). • Interrupt an active beam or the protective field (see figure) with a suitable, opaque test object: 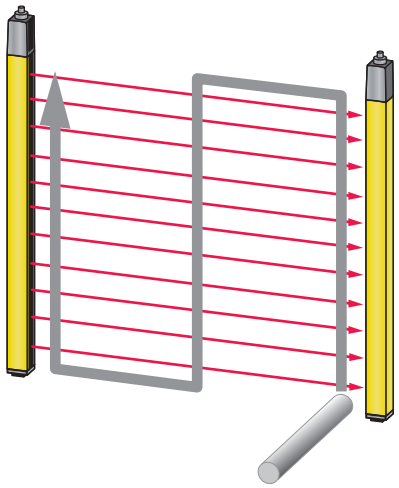 Checking the protective field function with test rod (only for safety light curtains with a resolution of 14 … 40 mm). For light curtains with different resolution ranges, this check is to be performed separately for each resolution range. • Does the OSSD LED on the receiver illuminate constantly red while the protective field is interrupted?		

When possible, test during running operation:	Yes	No
Protective device with approach function: during machine operation, the protective field is interrupted with the test object – are the obviously dangerous machine parts stopped without noticeable delay?		
Protective device with presence detection: the protective field is interrupted with the test object – does this prevent operation of the obviously dangerous machine parts?		

10 Maintenance

	NOTICE
!	**Faulty operation if transmitter and receiver are soiled!** The surfaces of the front screen of transmitters, receivers and, where applicable, deflecting mirror must not be scratched or roughened at the positions where beams enter and exit. ↳ Do not use chemical cleaners.

Prerequisites for cleaning:

- The system is safely shut down and protected against restart.

↳ Clean the safety sensor periodically depending on the degree of contamination.

	NOTICE
!	**Prevent electrostatic charging of the front screens!** ↳ To clean the front screens of transmitter and receiver, use only damp cloths.

11 Troubleshooting

11.1 What to do in case of failure?

After switching the safety sensor on, the display elements (see chapter 3.3 "Display elements") assist in checking the correct functionality and in faultfinding.

In case of failure, you can determine the fault from the LED displays or read a message from the 7-segment display. With the error message you can determine the cause of the error and initiate measures to rectify it.

	NOTICE
	If the safety sensor responds with an error display, you will often be able to eliminate the cause yourself! ↳ Switch off the machine and leave it switched off. ↳ Analyze and eliminate the cause of the fault using the following table. ↳ If you are unable to rectify the fault, contact the Leuze electronic branch responsible for you or call the Leuze electronic customer service (see chapter 13 "Service and support").

11.2 Operating indicators of the LEDs

Tab. 11.1: LED indicators at the transmitter - causes and measures

LED	State	Cause	Measure
LED1	OFF	Transmitter without supply voltage	Check the power supply unit and the electrical connection. Exchange the power supply unit, if applicable.
	Red	Device failed	Replace the device.

Tab. 11.2: LED indicators at the receiver - causes and measures

LED	State	Cause	Measure
LED1	OFF	Device failed	Replace the device.
	Red (7-segment display during start-up: “C1” or “C2” according to the number of green LEDS on the transmitter)	Alignment incorrect or protective field interrupted	Remove all objects from the protective field. Align the transmitter and receiver to each other or place blanked objects correctly concerning size and position.
	Red (7-segment display during start-up: “C1”. LEDs on transmitter: both green)	Receiver is set on C1, transmitter on C2	Set the transmitter and receiver on the same transmission channel and align both correctly.
	Red (7-segment display during start-up: “C2”. LED1 on transmitter: green)	Receiver is set on C2, transmitter on C1	Remove all objects from the protective field. Align the transmitter and receiver to each other or place blanked objects correctly concerning size and position.
	Red, flashing slowly, approx. 1 Hz (7-segment display “E x y”)	External error	Check the connection of the cables and the control signals.
	Red, flashing fast, approx. 10 Hz (7-segment display “F x y”)	Internal error	If restart fails, exchange the device.
	Green, flashing slowly, approx. 1 Hz	Weak signal due to contamination or poor alignment	Clean the front screens and check the alignment of transmitter and receiver.
LED2	Yellow	Start/restart interlock is locked and protective field is free - ready for unlocking	If there are no people in the danger zone, operate the reset button.
	Yellow flashing	The control circuit is open in operating mode 1, 2 and 3	Close the input circuit with the correct polarity and timing.

11.3 Error messages 7-segment display

Tab. 11.3: Messages of the 7-segment display (F: internal device error, E: external error, U: usage info during application errors)

Error	Cause/description	Measures	Sensor behavior
F[No. 0-255]	Internal error	In the event of an unsuccessful restart, contact customer service.	
OFF	Very high overvoltage (± 40 V)	Supply the device with the correct voltage.	
E01	Cross connection between OSSD1 and OSSD2	Check the wiring between OSSD1 and OSSD2.	Automatic reset
E02	Overload on OSSD1	Check the wiring or exchange the connected component (reducing the load).	Automatic reset
E03	Overload on OSSD2	Check the wiring or exchange the connected component (reducing the load).	Automatic reset
E04	High-impedance short circuit to VCC OSSD1	Check the wiring. Exchange the cable, if applicable.	Automatic reset
E05	High-impedance short circuit to VCC OSSD2	Check the wiring. Exchange the cable, if applicable.	Automatic reset
E06	Short circuit against GND at OSSD1	Check the wiring. Exchange the cable, if applicable.	Automatic reset
E07	Short circuit against +24 V at OSSD1	Check the wiring. Exchange the cable, if applicable.	Automatic reset
E08	Short circuit against GND at OSSD2	Check the wiring. Exchange the cable, if applicable.	Automatic reset
E09	Short circuit against +24 V at OSSD2	Check the wiring. Exchange the cable, if applicable.	Automatic reset
E10, E11	OSSD error, source unknown	Check the wiring. Exchange the cable and the receiver if necessary.	Automatic reset
E14	Undervoltage (< +15 V)	Supply the device with the correct voltage.	Automatic reset
E15	Overvoltage (> +32 V)	Supply the device with the correct voltage.	Automatic reset
E16	Overvoltage (> +40 V)	Supply the device with the correct voltage.	Locking
E17	Foreign transmitter detected	Remove foreign transmitters and increase the distance to the reflective surfaces. Actuate the start button if available.	Locking
E18	Ambient temperature too high	Ensure correct environmental conditions	Automatic reset
E19	Ambient temperature too low	Ensure correct environmental conditions	Automatic reset
E22	Interference detected on plug pin 3. Signal output: output signal is not equal to the signal input read-back value: it switches simultaneously with the other signal line.	Check the wiring.	Automatic reset

Error	Cause/description	Measures	Sensor behavior
E23	Interference detected on plug pin 4. Signal output: output signal is not equal to the signal input read-back value: it switches simultaneously with the other signal line.	Check the wiring.	Automatic reset
E24	Interference detected on plug pin 8. Signal output: output signal is not equal to the signal input read-back value: it switches simultaneously with the other signal line.	Check the wiring.	Automatic reset
E30	EDM does not open	Actuate the start button if available.	Locking
E31	EDM does not close	Actuate the start button if available.	Locking
E37	EDM operating mode changed during operation	Check the correctness of the selected operating mode, correct the operating mode if required, and restart.	Locking
E38	Restart interlock operating mode changed during operation	Check the correctness of the selected operating mode, correct the operating mode if required, and restart.	Locking
E39	Actuation duration (2.5 min) exceeded for reset button or cable short circuited	Press the reset button. If the restart is unsuccessful, check the wiring of the reset button.	Automatic reset
E41	Invalid change of operating mode due to reversal of the supply voltage polarity during operation	Check the wiring and programming of the device which controls this signal.	Locking
E80 … E86	Invalid operating mode due to setting error, general operating mode change	E.g. reset button pressed during start-up, check the circuit diagram and the wiring and restart.	Locking
E87	Operating mode changed	Check the wiring. Restart the sensor.	Locking
E90	Faulty connection on HOST or Middle Guest	Check connection, e.g., connect terminating plug	Locking

12 Disposing

↳ For disposal observe the applicable national regulations regarding electronic components.

13 Service and support

24-hour on-call service at:
+49 7021 573-0

Service hotline:
+49 7021 573-123

E-mail:
service.protect@leuze.de

Return address for repairs:
Servicecenter
Leuze electronic GmbH + Co. KG
In der Braike 1
D-73277 Owen/Germany

14 Technical data

14.1 General specifications

Tab. 14.1: Protective field data

Physical resolution [mm]	Operating range [m]		Protective field height [mm]	
	min.	max.	min.	max.
14	0	6	150	3000
20	0	15	150	3000
30	0	10	150	3000
40	0	20	150	3000
90	0	20	450	3000

Tab. 14.2: Safety-relevant technical data

Type in accordance with IEC 61496	Type 4
SIL in accordance with IEC 61508	SIL 3
SILCL in accordance with IEC 62061	SILCL 3
Performance Level (PL) in accordance with ISO 13849-1	PL e
Category in accordance with ISO 13849-1	Cat. 4
Average probability of a failure to danger per hour (PFH_d)	7.73×10^{-9} 1/h
Mission time (T_M)	20 years

Tab. 14.3: General system data

Connection technology	M12, 5-pin (transmitter) M12, 8-pin (receiver)
Supply voltage U_v, transmitter and receiver	+24 V, ± 20 %, compensation necessary at 20 ms voltage dip, min. 250 mA (+ OSSD load)
Residual ripple of the supply voltage	± 5 % within the limits of U_v
Current consumption - transmitter	50 mA
Current consumption receiver	150 mA (without load)
Common value for ext. fuse in the supply line for transmitter and receiver	2 A semi time-lag
Synchronization	Optical between transmitter and receiver
Protection class	III
Degree of protection	IP 65
Ambient temperature, operation	-30 … +55 °C
Ambient temperature, storage	-30 … 70 °C
Ambient temperature, MLCxxx/V operation	0 … 55 °C
Relative humidity (non-condensing)	0 … 95 %
Vibration resistance	50 m/s^2 acceleration, 10 - 55 Hz in acc. with IEC 60068-2-6; 0.35 mm amplitude

MLCxxx/V vibration resistance	55-2000 Hz in accordance with IEC 60068-2-6 • 55-116 Hz: ±0.75 mm amplitude • 116-2000 Hz: 200 m/s² acceleration (or vibration response < 400 m/s²) • Excitation axes: all three spatial axes • Frequency change: 1 oct/min • Number of frequency sweeps: 100 sweeps per axis (50 cycles)
Shock resistance	100 m/s^2 acceleration, 16 ms acc. to IEC 60068-2-6
MLCxxx/V shock resistance	• 400 m/s² acceleration, 1 ms • 50000 impacts per spatial axis Excitation axes: all three spatial axes
Profile cross section	29 mm x 35.4 mm
Dimensions	see chapter 14.2 "Dimensions, weight, response time"
Weight	see chapter 14.2 "Dimensions, weight, response time"

Tab. 14.4: System data - transmitter

Light source	LED; exempt group in acc. with IEC 62471
Wavelength	940 nm
Pulse duration	800 ns
Pulse pause	1.9 µs (min.)
Mean power	<50 µW
Input current pin 4 (range)	Against +24 V: 10 mA Against 0 V: 10 mA

Tab. 14.5: System data receiver, indication signals and control signals

Pin	Signal	Type	Electrical data
1	RES/STATE	Input: Output:	Against +24 V: 15 mA Against 0 V: 80 mA
3	EDM	Input:	Against 0 V: 15 mA
4	RES	Input:	Against 24 V: 15 mA

Tab. 14.6: Technical data of the electronic safety-related switching outputs (OSSDs) on the receiver

Safety-related PNP transistor outputs (short-circuit monitored, cross-circuit monitored)	Minimum	Typical	Maximum
Switching voltage high active (U_v - 1.5V)	18 V	22.5 V	27 V
Switching voltage low		0 V	+2.5 V
Switching current		300 mA	380 mA
Residual current		<2 µA	200 µA In the event of a failure (if the 0 V cable is interrupted), each of the outputs behaves as a 120 kΩ resistor to U_v. A downstream safety PLC must not detect this as a logical “1”.
Load capacity			0.3 µF
Load inductivity			2 H
Permissible wire resistance for load			<200 Ω Note the additional restrictions due to cable length and load current.
Permissible wire cross section		0.25 mm^2	
Permissible cable length between receiver and load			100 m
Test pulse width		60 µs	340 µs
Test pulse distance	(5 ms)	60 ms	
OSSD restart delay time after beam interruption		100 ms	

NOTICE

The safety-related transistor outputs perform the spark extinction. With transistor outputs, it is therefore neither necessary nor permitted to use the spark extinction circuits recommended by contactor or valve manufacturers (RC elements, varistors or recovery diodes), since these considerably extend the decay times of inductive switching elements.

Tab. 14.7: Patents

US patents	US 6,418,546 B

14.2 Dimensions, weight, response time

Dimensions, weight and response time are dependent on

- the resolution
- the length

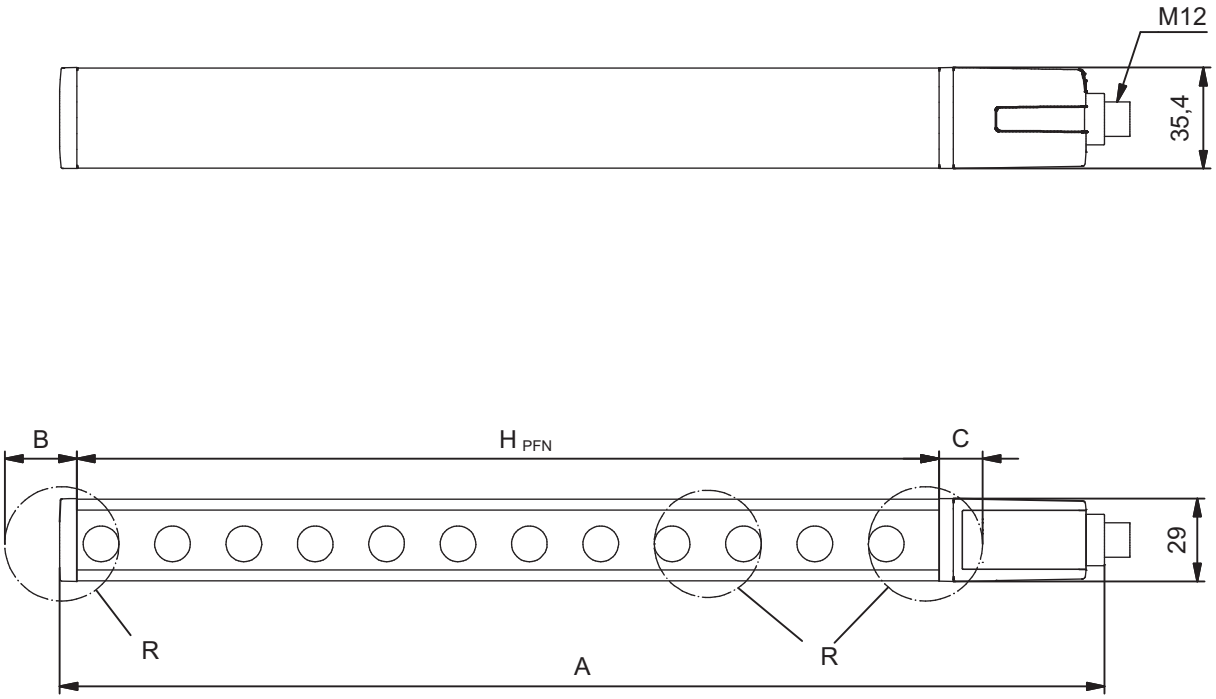

Fig. 14.1: Dimensions of transmitter and receiver

Effective protective field height H_{PFE} goes beyond the dimensions of the optics area to the outer borders of the circles labeled with R.

Calculation of the effective protective field height

$$H_{PFE} = H_{PFN} + B + C$$

H_{PFE}	[mm]	=	Effective protective field height
H_{PFN}	[mm]	=	Rated protective field height, this corresponds to the length of the yellow housing part (see tables below)
A	[mm]	=	Total height
B	[mm]	=	Additional dimensions for calculation of the effective protective field height (see table below)
C	[mm]	=	Value for calculating the effective protective field height (see tables below)

Tab. 14.8: Additional dimensions for calculating the effective protective field height

R = resolution	B	C
14 mm	6 mm	6 mm
20 mm	7 mm	10 mm
30 mm	19 mm	9 mm
40 mm	25 mm	15 mm
90 mm	50 mm	40 mm

Tab. 14.9: Dimensions (nominal protective field height), weight and response time

Device type	Transmitter and receiver			Receiver				
	Dimensions [mm]		Weight [kg]	Response time [ms] acc. to resolution				
Type	H_{PFN}	A		14 mm	20 mm	30 mm	40 mm	90 mm
MLC…-150	150	216	0.30	5	4	3	3	-
MLC…-225	225	291	0.37	-	5	3	3	-
MLC…-300	300	366	0.45	8	7	4	4	-
MLC…-450	450	516	0.60	11	9	5	5	3
MLC…-600	600	666	0.75	14	12	7	7	3
MLC…-750	750	816	0.90	17	14	8	8	4
MLC…-900	900	966	1.05	20	17	9	9	4
MLC…-1050	1050	1116	1.20	23	19	10	10	4
MLC…-1200	1200	1266	1.35	26	22	12	12	5
MLC…-1350	1350	1416	1.50	30	24	13	13	5
MLC…-1500	1500	1566	1.65	33	26	14	14	6
MLC…-1650	1650	1716	1.80	36	29	15	15	6
MLC…-1800	1800	1866	1.95	39	31	17	17	7
MLC…-1950	1950	2016	2.10	42	34	18	18	7
MLC…-2100	2100	2166	2.25	45	36	19	19	7
MLC…-2250	2250	2316	2.40	48	39	20	20	8
MLC…-2400	2400	2466	2.55	51	41	22	22	8
MLC…-2550	2550	2616	2.70	55	44	23	23	9
MLC…-2700	2700	2766	2.85	58	46	24	24	9
MLC…-2850	2850	2916	3.00	61	49	25	25	9
MLC…-3000	3000	3066	3.15	64	51	26	26	10

14.3 Dimensioned drawings: Accessories

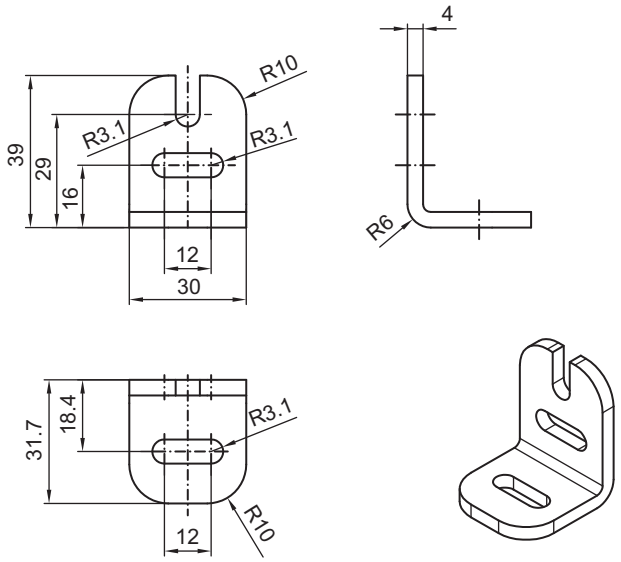

Fig. 14.2: BT-L mounting bracket

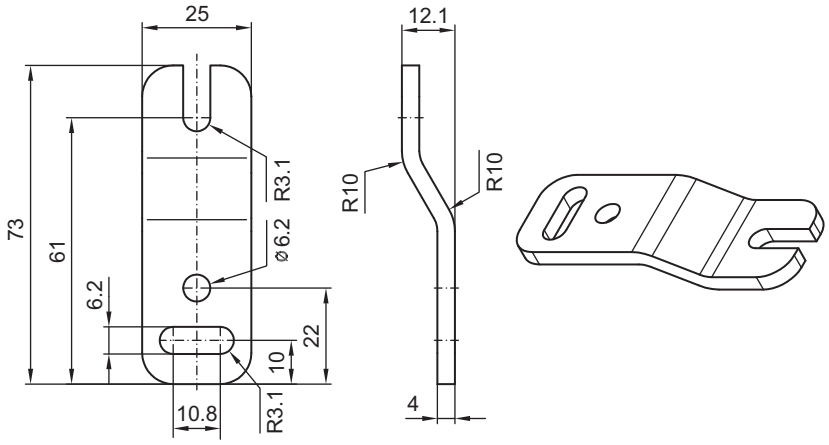

Fig. 14.3: BT-Z parallel bracket

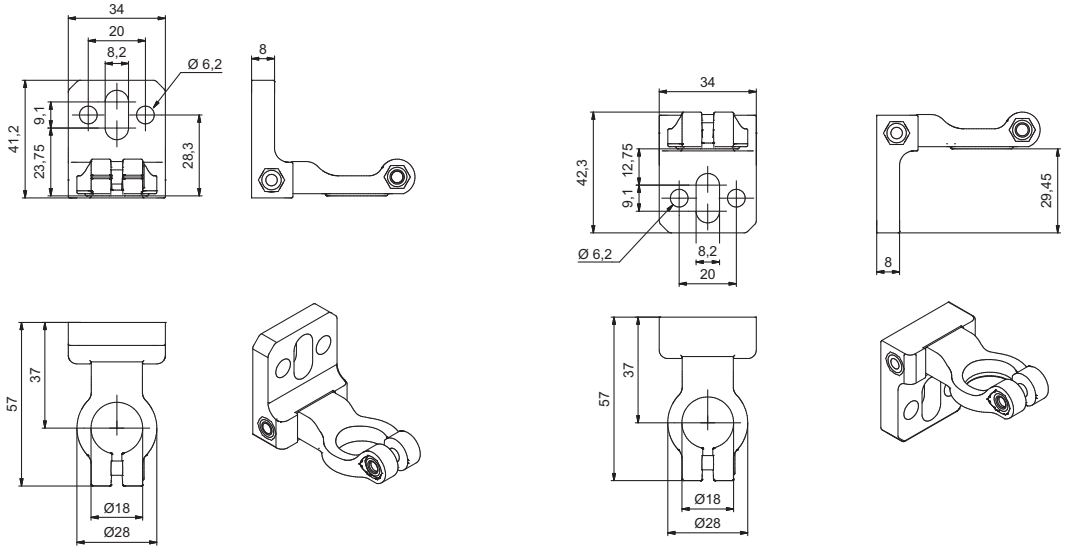

Fig. 14.4: Swivel mount BT-2HF

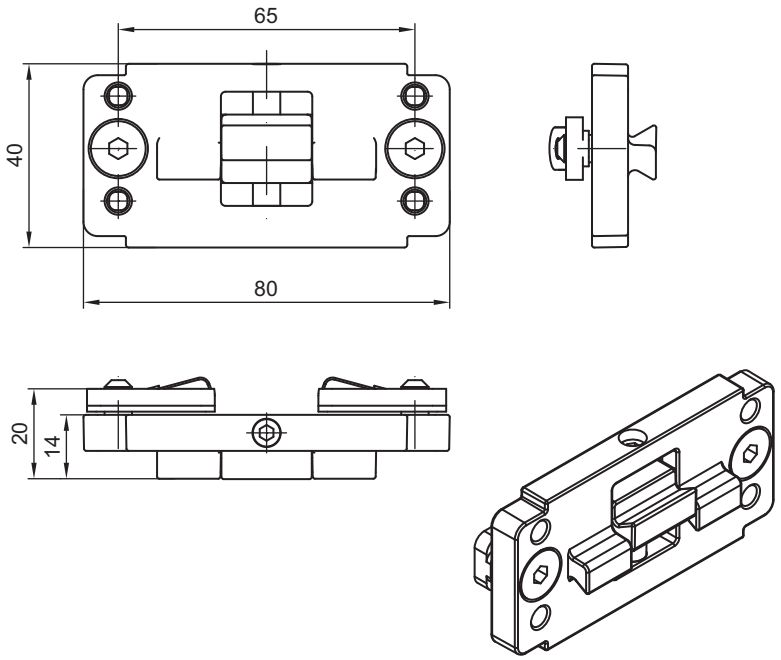

Fig. 14.5: BT-P40 clamp bracket for mounting in UDC device columns

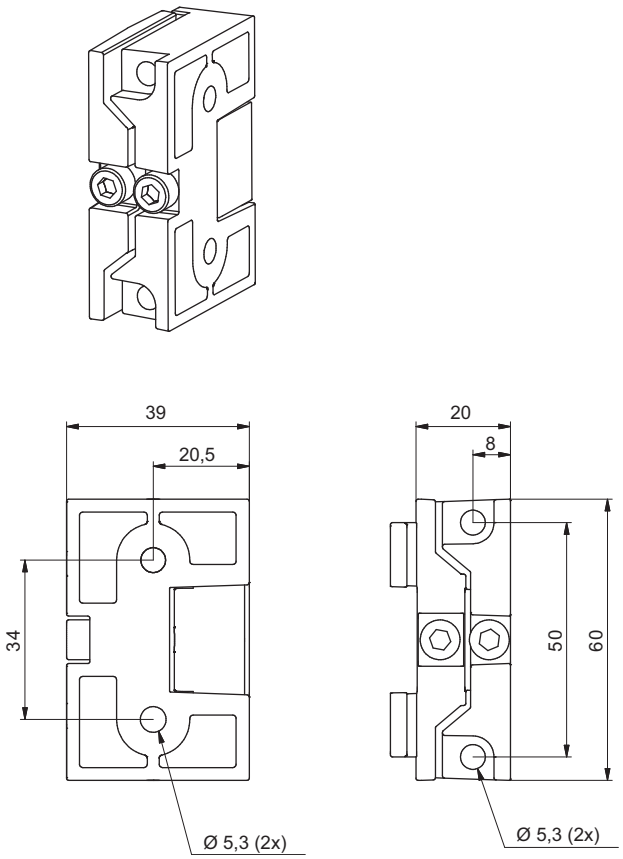

Fig. 14.6: Swiveling mounting bracket BT-2SB10

15 Order guide and accessories

Nomenclature

Part designation:

MLCxyy-za-hhhhei-ooo

Tab. 15.1: Part number code

MLC	Safety sensor
x	Series: 3 for MLC 300
x	Series: 5 for MLC 500
yy	Function classes: 00: Transmitter 01: transmitter (AIDA) 02: Transmitter with test input 10: Basic receiver - automatic restart 11: basic receiver - automatic restart (AIDA) 20: Standard receiver - EDM/RES selectable 30: Extended receiver - blanking/muting
z	Device type: T: transmitter R: receiver
a	Resolution: 14: 14 mm 20: 20 mm 30: 30 mm 40: 40 mm 90: 90 mm
hhhh	Protective field height: 150 … 3000: from 150 mm to 3000 mm
e	Host/Guest (optional): H: Host MG: Middle Guest G: Guest
i	Interface (optional): /A: AS-i
ooo	Option: EX2: explosion protection (zones 2 + 22) /V: high Vibration-proof SPG: Smart Process Gating

Tab. 15.2: Part descriptions, examples

Examples for part designation	Properties
MLC500T14-600	Type 4 transmitter, PL e, SIL 3, resolution 14 mm, protective field height 600 mm
MLC500T30-900	Type 4 transmitter, PL e, SIL 3, resolution 30 mm, protective field height 900 mm
MLC520R90-1500	Type 4 Standard receiver, PL e, SIL 3, resolution 90 mm, protective field height 1500 mm

Scope of delivery

- Transmitter including 2 sliding blocks, 1 instruction sheet
- Receiver including 2 sliding blocks, 1 self-adhesive notice sign “Important notices and notices for the machine operator”, 1 set of connecting and operating instructions (PDF file on CD-ROM)

Tab. 15.3: Part numbers of MLC 500 transmitter depending on resolution and protective field height

Protective field height hhhh [mm]	14 mm MLC500T14-hhhh	20 mm MLC500T20-hhhh	30 mm MLC500T30-hhhh	40 mm MLC500T40-hhhh	90 mm MLC500T90-hhhh
150	68000101	68000201	68000301	68000401	-
225	-	68000202	68000302	68000402	-
300	68000103	68000203	68000303	68000403	-
450	68000104	68000204	68000304	68000404	68000904
600	68000106	68000206	68000306	68000406	68000906
750	68000107	68000207	68000307	68000407	68000907
900	68000109	68000209	68000309	68000409	68000909
1050	68000110	68000210	68000310	68000410	68000910
1200	68000112	68000212	68000312	68000412	68000912
1350	68000113	68000213	68000313	68000413	68000913
1500	68000115	68000215	68000315	68000415	68000915
1650	68000116	68000216	68000316	68000416	68000916
1800	68000118	68000218	68000318	68000418	68000918
1950	68000119	68000219	68000319	68000419	68000919
2100	68000121	68000221	68000321	68000421	68000921
2250	68000122	68000222	68000322	68000422	68000922
2400	68000124	68000224	68000324	68000424	68000924
2550	68000125	68000225	68000325	68000425	68000925
2700	68000127	68000227	68000327	68000427	68000927
2850	68000128	68000228	68000328	68000428	68000928
3000	68000130	68000230	68000330	68000430	68000930

Tab. 15.4: Part numbers of MLC 520 receiver depending on resolution and protective field height

Protective field height hhhh [mm]	14 mm MLC520R14-hhhh	20 mm MLC520R20-hhhh	30 mm MLC520R30-hhhh	40 mm MLC520R40-hhhh	90 mm MLC520R90-hhhh
150	68002101	68002201	68002301	68002401	-
225	-	68002202	68002302	68002402	-
300	68002103	68002203	68002303	68002403	-
450	68002104	68002204	68002304	68002404	68002904
600	68002106	68002206	68002306	68002406	68002906
750	68002107	68002207	68002307	68002407	68002907
900	68002109	68002209	68002309	68002409	68002909
1050	68002110	68002210	68002310	68002410	68002910
1200	68002112	68002212	68002312	68002412	68002912
1350	68002113	68002213	68002313	68002413	68002913
1500	68002115	68002215	68002315	68002415	68002915
1650	68002116	68002216	68002316	68002416	68002916
1800	68002118	68002218	68002318	68002418	68002918
1950	68002119	68002219	68002319	68002419	68002919
2100	68002121	68002221	68002321	68002421	68002921
2250	68002122	68002222	68002322	68002422	68002922
2400	68002124	68002224	68002324	68002424	68002924
2550	68002125	68002225	68002325	68002425	68002925
2700	68002127	68002227	68002327	68002427	68002927
2850	68002128	68002228	68002328	68002428	68002928
3000	68002130	68002230	68002330	68002430	68002930

Tab. 15.5: Part numbers of MLC 500/V transmitter depending on resolution and protective field height

Protective field height hhhh [mm]	14 mm MLC500T14-hhhh	30 mm MLC500T30-hhhh
150	68000131	68000331
300	68000133	68000333
450	68000134	68000334
600	68000136	68000336
750	68000137	68000337
900	68000139	68000339

Tab. 15.6: Part numbers of MLC 520/V receiver depending on resolution and protective field height

Protective field height hhhh [mm]	14 mm MLC520R14-hhhh	30 mm MLC520R30-hhhh
150	68002131	68002331
300	68002133	68002333
450	68002134	68002334
600	68002136	68002336
750	68002137	68002337
900	68002139	68002339

Tab. 15.7: Accessories

Part no.	Article	Description
Connection cables for MLC 500 **transmitter, shielded**		
50133860	KD S-M12-5A-P1-050	Connection cable, 5-pin, 5 m long
50133861	KD S-M12-5A-P1-100	Connection cable, 5-pin, 10 m long
678057	CB-M12-15000E-5GF	Connection cable, 5-pin, 15 m long
678058	CB-M12-25000E-5GF	Connection cable, 5-pin, 25 m long
50137013	KD S-M12-5A-P1-500	Connection cable, 5-pin, 50 m long
Connection cables for MLC 500 **transmitter, unshielded**		
50133841	KD U-M12-5A-P1-050	Connection cable, 5-pin, 5 m long
50132534	KD U-M12-5A-P1-100	Connection cable, 5-pin, 10 m long
429088	CB-M12-15000-5GF	Connection cable, 5-pin, 15 m long
429089	CB-M12-25000-5GF	Connection cable, 5-pin, 25 m long
429281	CB-M12-50000-5GF	Connection cable, 5-pin, 50 m long
Connection cables for MLC 520 **receiver, shielded**		
50135128	KD S-M12-8A-P1-050	Connection cable, 8-pin, 5 m long
50135129	KD S-M12-8A-P1-100	Connection cable, 8-pin, 10 m long
50135130	KD S-M12-8A-P1-150	Connection cable, 8-pin, 15 m long
50135131	KD S-M12-8A-P1-250	Connection cable, 8-pin, 25 m long
50135132	KD S-M12-8A-P1-500	Connection cable, 8-pin, 50 m long
Connection cables for MLC 520 **receiver, unshielded**		
50135122	KD U-M12-8A-P1-050	Connection cable, 8-pin, 5 m long
50135123	KD U-M12-8A-P1-100	Connection cable, 8-pin, 10 m long
50135124	KD U-M12-8A-P1-150	Connection cable, 8-pin, 15 m long
50135125	KD U-M12-8A-P1-300	Connection cable, 8-pin, 30 m long
429289	CB-M12-50000-8GF	Connection cable, 8-pin, 50 m long
User-configurable connectors for MLC 500 transmitter		
429175	CB-M12-5GF	Cable socket, 5-pin, metal housing, shield on housing

Part no.	Article	Description
User-configurable connectors for MLC 520 receiver		
429178	CB-M12-8GF	Cable socket, 8-pin, metal housing, shield on housing
Mounting technology		
429056	BT-2L	L mounting bracket, 2x
429057	BT-2Z	Z mounting bracket, 2x
429393	BT-2HF	360° swivel mount, 2x incl. 1 MLC cylinder
429394	BT-2HF-S	360° swivel mount, vibration-damped, 2x incl. 1 MLC cylinder
424417	BT-2P40	Mounting set, consisting of 2x BT-P40 clamp brackets, for mounting in UDC-S2 device column
424422	BT-2SB10	Swiveling mounting bracket for groove mounting, ± 8°, 2x
424423	BT-2SB10-S	Swiveling mounting bracket for groove mounting, ± 8°, vibration damped, 2x
425740	BT-10NC60	Sliding block with M6 thread, 10 x
425741	BT-10NC64	Sliding block with M6 and M4 thread, 10 x
425742	BT-10NC65	Sliding block with M6 and M5 thread, 10 x
Device columns		
549855	UDC-900-S2	Device column, U-shaped, profile height 900 mm
549856	UDC-1000-S2	Device column, U-shaped, profile height 1000 mm
549852	UDC-1300-S2	Device column, U-shaped, profile height 1300 mm
549853	UDC-1600-S2	Device column, U-shaped, profile height 1600 mm
549854	UDC-1900-S2	Device column, U-shaped, profile height 1900 mm
549857	UDC-2500-S2	Device column, U-shaped, profile height 2500 mm
Deflecting mirror columns		
549780	UMC-1000-S2	Continuous deflecting mirror column 1000 mm
549781	UMC-1300-S2	Continuous deflecting mirror column 1300 mm
549782	UMC-1600-S2	Continuous deflecting mirror column 1600 mm
549783	UMC-1900-S2	Continuous deflecting mirror column 1900 mm
Deflecting mirror		
529601	UM60-150	Deflecting mirror, mirror length 210 mm
529603	UM60-300	Deflecting mirror, mirror length 360 mm
529604	UM60-450	Deflecting mirror, mirror length 510 mm
529606	UM60-600	Deflecting mirror, mirror length 660 mm
529607	UM60-750	Deflecting mirror, mirror length 810 mm
529609	UM60-900	Deflecting mirror, mirror length 960 mm
529610	UM60-1050	Deflecting mirror, mirror length 1110 mm
529612	UM60-1200	Deflecting mirror, mirror length 1260 mm
529613	UM60-1350	Deflecting mirror, mirror length 1410 mm
529615	UM60-1500	Deflecting mirror, mirror length 1560 mm
529616	UM60-1650	Deflecting mirror, mirror length 1710 mm

Part no.	Article	Description
529618	UM60-1800	Deflecting mirror, mirror length 1860 mm
430105	BT-2UM60	Mounting bracket for UM60, 2x
Protective screens		
347070	MLC-PS150	Protective screen, length 148 mm
347071	MLC-PS225	Protective screen, length 223 mm
347072	MLC-PS300	Protective screen, length 298 mm
347073	MLC-PS450	Protective screen, length 448 mm
347074	MLC-PS600	Protective screen, length 598 mm
347075	MLC-PS750	Protective screen, length 748 mm
347076	MLC-PS900	Protective screen, length 898 mm
347077	MLC-PS1050	Protective screen, length 1048 mm
347078	MLC-PS1200	Protective screen, length 1198 mm
347079	MLC-PS1350	Protective screen, length 1348 mm
347080	MLC-PS1500	Protective screen, length 1498 mm
347081	MLC-PS1650	Protective screen, length 1648 mm
347082	MLC-PS1800	Protective screen, length 1798 mm
429038	MLC-2PSF	Mounting device for MLC protective screen, 2 x
429039	MLC-3PSF	Mounting device for MLC protective screen, 3 x
Laser alignment aids		
560020	LA-78U	External laser alignment aid
520004	LA-78UDC	External laser alignment aid for fastening in Device Column
520101	AC-ALM-M	Alignment aid
Test rods		
349945	AC-TR14/30	Test rod 14/30 mm
349939	AC-TR20/40	Test rod 20/40 mm

16 EU/EC Declaration of Conformity

SMART
SENSOR
BUSINESS

Leuze electronic
the sensor people

EU-/EG-KONFORMITÄTS-ERKLÄRUNG	EU/EC DECLARATION OF CONFORMITY	DECLARATION UE/CE DE CONFORMITE
Hersteller:	Manufacturer:	Constructeur:
	Leuze electronic GmbH + Co. KG In der Braike 1, PO Box 1111 73277 Owen, Germany	
Produktbeschreibung:	Description of product:	Description de produit:
Sicherheits- Lichtvorhang, Berührungslos wirkende Schutzeinrichtung, Sicherheitsbauteil nach 2006/42/EG Anhang IV MLC 300, MLC 500 Seriennummer siehe Typschild	**Safety Light Curtain, Active opto-electronic protective device, safety component in acc. with 2006/42/EC annex IV MLC 300, MLC 500 Serial no. see name plates**	**Barrière immatérielle de sécurité, Equipement de protection électrosensible, Elément de sécurité selon 2006/42/CE annexe IV MLC 300, MLC 500 N° série voir plaques signalétiques**
Die alleinige Verantwortung für die Ausstellung dieser Konformitätserklärung trägt der Hersteller.	This declaration of conformity is issued under the sole responsibility of the manufacturer.	La présente déclaration de conformité est établie sous la seule responsabilité du fabricant.
Der oben beschriebene Gegenstand der Erklärung erfüllt die einschlägigen Harmonisierungsrechts-vorschriften der Union:	The object of the declaration described above is in conformity with the relevant Union harmonisation legislation:	L'objet de la déclaration décrit ci-dessus est conforme à la législation d'harmonisation de l'Union applicable:
Angewandte EU-/EG-Richtlinie(n):	Applied EU/EC Directive(s):	Directive(s) UE/CE appliquées:
2006/42/EG (*1) 2014/30/EU	**2006/42/EC (*1) 2014/30/EU**	**2006/42/CE (*1) 2014/30/UE**

Angewandte harmonisierte Normen / Applied harmonized standards / Normes harmonisées appliquées:

EN 61496-1:2013 (Type2/4) EN 62061:2005+A2:2015 (SILCL1/3)	**EN 55011:2009+A1:2010**	**EN ISO 13849-1:2015 (Cat 2/4,PLc/e)**

Angewandte technische Spezifikationen / Applied technical specifications / Spécifications techniques appliquées:

IEC 61496-2:2013 (Type2/4)	**EN 50178:1997**	**EN 61508-1/-2/-3/-4:2010 (SIL1/3)**

Notified Body
(*1) TUEV-SUED Product Service GmbH, Zertifizierstelle, Ridlerstraße 65, D-80339 Munich, NB0123, Z10 17 08 68636 029
Dokumentationsbevollmächtigter ist der genannte Hersteller, Kontakt: quality@leuze.de.
Authorized for documentation is the stated manufacturer, contact: quality@leuze.de.
Autorisé pour documentation est le constructeur déclaré, contact: quality@leuze.de
2014/30/EU veröffentlicht: 29.03.2014, EU-Amtsblatt Nr. L 96/79-106; 2014/30/EU published: 29.03.2014, EU-Journal No. L 96/79-106; 2014/30/UE publié: Journal EU n° L 96/79-106

23.01.2018
Datum / Date / Date

Ulrich Balbach,
Geschäftsführer / Managing Director / Gérant

i.A. Fabien Zelenda
Quality Management Central Functions

Leuze electronic GmbH + Co. KG
In der Braike 1
D-73277 Owen
Telefon +49 (0) 7021 573-0
Telefax +49 (0) 7021 573-199
info@leuze.de
www.leuze.com

Leuze electronic GmbH + Co. KG, Sitz Owen, Registergericht Stuttgart, HRA 230712
Persönlich haftende Gesellschafterin Leuze electronic Geschäftsführungs-GmbH, Sitz Owen, Registergericht Stuttgart, HRB 230550
Geschäftsführer: Ulrich Balbach
USt.-IdNr. DE 145912521 | Zollnummer 2554232
Es gelten ausschließlich unsere aktuellen Verkaufs- und Lieferbedingungen
Only our current Terms and Conditions of Sale and Delivery shall apply

LEO-ZQM-148-07-FO