Leuze electronic

the sensor people

BCL308i
Bar code reader

en 01- 10/2011 50117117

TECHNICAL DESCRIPTION

ПРОМЭЛЕКТРОНИКА / sales@prom-elec.com

Leuze electronic

Leuze electronic GmbH + Co. KG
P.O. Box 1111, D-73277 Owen
Tel. +49(0)7021/573-0,
Fax +49(0)7021/573-199
info@leuze.de • www.leuze.com

Sales and Service

Germany

Sales Region North
Phone 07021/573-306
Fax 07021/9850950

Postal code areas
20000-38999
40000-65999
97000-97999

Sales Region South
Phone 07021/573-307
Fax 07021/9850911

Postal code areas
66000-96999

Sales Region East
Phone 035027/629-106
Fax 035027/629-107

Postal code areas
01000-19999
39000-39999
98000-99999

Worldwide

AR (Argentina)
Condelectric S.A.
Tel. Int. + 54 1148 361053
Fax Int. + 54 1148 361053

AT (Austria)
Schmachtl GmbH
Tel. Int. + 43 732 7646-0
Fax Int. + 43 732 7646-785

AU + NZ (Australia + New Zealand)
Balluff-Leuze Pty. Ltd.
Tel. Int. + 61 3 9720 4100
Fax Int. + 61 3 9738 2677

BE (Belgium)
Leuze electronic nv/sa
Tel. Int. + 32 2253 16-00
Fax Int. + 32 2253 15-36

BG (Bulgaria)
ATICS
Tel. Int. + 359 2 847 6244
Fax Int. + 359 2 847 6244

BR (Brasil)
Leuze electronic Ltda.
Tel. Int. + 55 11 5180-6130
Fax Int. + 55 11 5180-6141

CH (Switzerland)
Leuze electronic AG
Tel. Int. + 41 41 784 5656
Fax Int. + 41 41 784 5657

CL (Chile)
Imp. Tec. Vignola S.A.I.C.
Tel. Int. + 56 3235 11-11
Fax Int. + 56 3235 11-28

CN (China)
Leuze electronic Trading
(Shenzhen) Co. Ltd.
Tel. Int. + 86 755 862 64909
Fax Int. + 86 755 862 64901

CO (Colombia)
Componentes Electronicas Ltda.
Tel. Int. + 57 4 3511049
Fax Int. + 57 4 3511019

CZ (Czech Republic)
Schmachtl CZ s.r.o.
Tel. Int. + 420 244 0015-00
Fax Int. + 420 244 9107-00

DK (Denmark)
Leuze electronic Scandinavia ApS
Tel. Int. + 45 48 173200

ES (Spain)
Leuze electronic S.A.
Tel. Int. + 34 93 4097900
Fax Int. + 34 93 49035820

FI (Finland)
SKS-automaatio Oy
Tel. Int. + 358 20 764-61
Fax Int. + 358 20 764-6820

FR (France)
Leuze electronic Sarl.
Tel. Int. + 33 160 0512-20
Fax Int. + 33 160 0503-65

GB (United Kingdom)
Leuze electronic Ltd.
Tel. Int. + 44 14 8040 85-00
Fax Int. + 44 14 8040 38-08

GR (Greece)
UTECO A.B.E.E.
Tel. Int. + 30 211 1206 900
Fax Int. + 30 211 1206 999

HK (Hong Kong)
Sensortech Company
Tel. Int. + 852 26510188
Fax Int. + 852 26510388

HR (Croatia)
Tipteh Zagreb d.o.o.
Tel. Int. + 385 1 381 6574
Fax Int. + 385 1 381 6577

HU (Hungary)
Kvalix Automatika Kft.
Tel. Int. + 36 1 272 2242
Fax Int. + 36 1 272 2244

ID (Indonesia)
P.T. Yabestindo Mitra Utama
Tel. Int. + 62 21 92861859
Fax Int. + 62 21 6451044

IL (Israel)
Galoz electronics Ltd.
Tel. Int. + 972 3 9023456
Fax Int. + 972 3 9021990

IN (India)
M + V Marketing Sales Pvt Ltd.
Tel. Int. + 91 124 4121623
Fax Int. + 91 124 434233

IT (Italy)
Leuze electronic S.r.l.
Tel. Int. + 39 02 26 1106-43
Fax Int. + 39 02 26 1106-40

JP (Japan)
C. Ilies & Co., Ltd.
Tel. Int. + 81 3 3443 4143
Fax Int. + 81 3 3443 4118

KE (Kenia)
Profa-Tech Ltd.
Tel. Int. + 254 20 828095/6
Fax Int. + 254 20 828129

KR (South Korea)
Leuze electronic Co., Ltd.
Tel. Int. + 82 31 3828228
Fax Int. + 82 31 3828522

MK (Macedonia)
Tipteh d.o.o. Skopje
Tel. Int. + 389 70 399 474
Fax Int. + 389 23 174 197

MX (Mexico)
Movitren S.A.
Tel. Int. + 52 81 8371 8616
Fax Int. + 52 81 8371 8588

MY (Malaysia)
Ingermark (M) SDN.BHD
Tel. Int. + 60 360 3427-88
Fax Int. + 60 360 3421-88

NG (Nigeria)
SABROW HI-TECH E. & A. LTD.
Tel. Int. + 234 80333 86366
Fax Int. + 234 80333 84463518

NL (Netherlands)
Leuze electronic BV
Tel. Int. + 31 418 65 35-44
Fax Int. + 31 418 65 38-08

NO (Norway)
Elteco A/S
Tel. Int. + 47 35 56 20-70
Fax Int. + 47 35 56 20-99

PL (Poland)
Balluff Sp. z o. o.
Tel. Int. + 48 71 338 49 29
Fax Int. + 48 71 338 49 30

PT (Portugal)
LA2P, Lda.
Tel. Int. + 351 21 4 447070
Fax Int. + 351 21 4 447075

RO (Romania)
O BOYLE s.r.l
Tel. Int. + 40 2 56201346
Fax Int. + 40 2 56221036

RS (Republic of Serbia)
Tipteh d.o.o. Beograd
Tel. Int. + 381 11 3131 057
Fax Int. + 381 11 3018 326

RU (Russian Federation)
ALL IMPEX 2001
Tel. Int. + 7 495 9213012
Fax Int. + 7 495 6462092

SE (Sweden)
Leuze electronic Scandinavia ApS
Tel. Int. +46 380-490951

SG + PH (Singapore + Philippines)
Balluff Asia Pte Ltd
Tel. Int. + 65 6252 43-84
Fax Int. + 65 6252 90-60

SI (Slovenia)
Tipteh d.o.o.
Tel. Int. + 386 1200 51-50
Fax Int. + 386 1200 51-51

SK (Slowakia)
Schmachtl SK s.r.o.
Tel. Int. + 421 2 58275600
Fax Int. + 421 2 58275601

TH (Thailand)
Industrial Electrical Co. Ltd.
Tel. Int. + 66 2 642 6700
Fax Int. + 66 2 642 4250

TR (Turkey)
Leuze electronic San.ve Tic.Ltd.Sti.
Tel. Int. + 90 216 456 6704
Fax Int. + 90 216 456 3650

TW (Taiwan)
Great Cofue Technology Co., Ltd.
Tel. Int. + 886 2 2983 80-77
Fax Int. + 886 2 2985 33-73

UA (Ukraine)
SV Altera OOO
Tel. Int. + 38 044 4961888
Fax Int. + 38 044 4961818

US + CA (United States + Canada)
Leuze electronic, Inc.
Tel. Int. + 1 248 486-4466
Fax Int. + 1 248 486-6699

ZA (South Africa)
Countapulse Controls (PTY.) Ltd.
Tel. Int. + 27 116 1575-56
Fax Int. + 27 116 1575-13

11/2011

© All rights reserved, especially the right of reproduction, distribution and translation. Copying or reproductions in any form require the written consent of the manufacturer.
Product names used without guarantee of free usability.
Changes reflecting technical improvements may be made.

1 General information ... 9

1.1 Explanation of symbols ... 9

1.2 Declaration of conformity ... 9

2 Safety notices ... 10

2.1 General safety notices ... 10

2.2 Safety standards ... 10

2.3 Approved purpose ... 10

2.4 Working safely ... 11

3 Fast commissioning / operating principle ... 13

3.1 Mounting the BCL 308*i* ... 13

3.2 Device arrangement and selection of the mounting location ... 13

3.3 Electrical connectionBCL 308*i* ... 14

3.4 Preparatory Ethernet settings ... 16

3.4.1 Manually setting the IP address ... 16

3.4.2 Automatically setting the IP address ... 16

3.4.3 Defining Ethernet host communication ... 17

3.4.4 TCP/IP ... 17

3.4.5 UDP ... 17

3.5 Further settings ... 18

3.6 Starting the device ... 19

3.7 Bar code reading ... 21

4 Device description ... 22

4.1 About the bar code readers of the BCL 300*i* series ... 22

4.2 Characteristics of the bar code readers of the BCL 300*i* series ... 23

4.3 Device construction ... 25

4.4 Reading techniques ... 28

4.4.1 Line scanner (single line) ... 28

4.4.2 Line scanner with oscillating mirror ... 29

4.4.3 Raster scanner (Raster Line) ... 30

4.5 Fieldbus systems ... 31

4.5.1 EtherNet ... 31

4.5.2 Ethernet – star topology ... 32

4.5.3 Ethernet – linear topology ... 33

4.6 Heater ... 33

4.7 autoReflAct ... 34

4.8 Reference codes ... 34

4.9 autoConfig ... 35

5 Specifications ... 36

5.1 General specifications of the bar code readers ... 36

5.1.1 Line scanner / raster scanner ... 36
5.1.2 Oscillating-mirror scanner ... 37
5.1.3 Line scanner / raster scanner with deflection mirror ... 38

5.2 Heating models of the bar code readers ... 38

5.2.1 Line scanner / raster scanner with heater ... 39
5.2.2 Oscillating-mirror scanner with heating ... 40
5.2.3 Line scanner / raster scanner with deflection mirror and heating ... 40

5.3 Dimensioned drawings ... 42

5.3.1 Dimensioned drawing of complete overview of the BCL 308*i* with MS 3xx / MK 3xx ... 42
5.3.2 Dimensioned drawing of line scanner with / without heating ... 43
5.3.3 Dimensioned drawing of deflection mirror scanner with / without heating ... 44
5.3.4 Dimensioned drawing of oscillating-mirror scanner with / without heating ... 45
5.3.5 Dimensioned drawing of MS 3xx hood with integrated connectors / MK 3xx terminal hood46

5.4 Reading field curves / optical data ... 47

5.4.1 Bar code characteristics ... 47
5.4.2 Raster scanner ... 48

5.5 Reading field curves ... 49

5.5.1 High Density (N) - optics: BCL 308*i* S/R1 N 102 (H) ... 50
5.5.2 High Density (N) - optics: BCL 308*i* S/R1 N 100 (H) ... 50
5.5.3 High Density (N) - optics: BCL 308*i* ON 100 (H) ... 51
5.5.4 Medium Density (M) - optics: BCL 308*i* S/R1 M 102 (H) ... 52
5.5.5 Medium Density (M) - optics: BCL 308*i* S/R1 M 100 (H) ... 52
5.5.6 Medium Density (M) - optics: BCL 308*i* OM 100 (H) ... 53
5.5.7 Low Density (F) - optics: BCL 308*i* S/R1 F 102 (H) ... 54
5.5.8 Low Density (F) - optics: BCL 308*i* S/R1 F 100 (H) ... 54
5.5.9 Low Density (F) - optics: BCL 308*i* OF 100 (H) ... 55
5.5.10 Ultra Low Density (L) - optics: BCL 308*i* S/R1 L 102 (H) ... 56
5.5.11 Ultra Low Density (L) - optics: BCL 308*i* S/R1 L 100 (H) ... 56
5.5.12 Ultra Low Density (L) - optics: BCL 308*i* OL 100 (H) ... 57

6 Installation and mounting ... 58

6.1 Storage, transportation ... 58

6.2 Mounting the BCL 308*i* ... 59
6.2.1 Fastening with M4 x 5 screws ... 59
6.2.2 BT 56 mounting device ... 60
6.2.3 BT 59 mounting device ... 62
6.3 Device arrangement ... 63
6.3.1 Selecting a mounting location ... 63
6.3.2 Avoiding total reflection – Line scanner ... 64
6.3.3 Avoiding total reflection – deflection mirror scanner ... 64
6.3.4 Avoiding total reflection – oscillating-mirror scanner ... 65
6.3.5 Mounting location ... 65
6.3.6 Devices with integrated heating ... 66
6.3.7 Possible reading angles between BCL 308*i* and bar code. ... 66
6.4 Cleaning ... 67

7 Electrical connection ... 68
7.1 Safety notices for the electrical connection ... 69
7.2 Electrical connectionBCL 308*i* ... 70
7.2.1 MS 308 hood with 3 integrated M12 connectors ... 70
7.2.2 MK 308 terminal hood with spring-loaded terminals ... 71
7.3 Detailed description of the connections ... 73
7.3.1 PWR / SW IN/OUT - Voltage supply and switching input/outputs 1 and 2 ... 73
7.3.2 SERVICE – USB interface (Mini-B type) ... 76
7.3.3 HOST / BUS IN for BCL 308*i* ... 77
7.3.4 BUS OUT for the BCL 308*i* ... 78
7.4 Ethernet topologies ... 79
7.4.1 Ethernet wiring ... 80
7.5 Cable lengths and shielding ... 81

8 Display elements and display ... 82
8.1 LED indicators BCL 308*i* ... 82
8.2 LED indicators MS 308/MK308 ... 84
8.3 Display BCL 308*i* ... 85

9 Leuze webConfig tool ... 87
9.1 Connecting the SERVICE USB interface ... 87
9.2 Installing the required software ... 88
9.2.1 System requirements ... 88
9.2.2 Installing the USB driver ... 88
9.3 Starting the webConfig tool ... 89

9.4 Short description of the webConfig tool ... 90
9.4.1 Module overview in the Configuration menu ... 90

10 Commissioning and configuration ... 92
10.1 Measures to be performed prior to the initial commissioning ... 92
10.2 Starting the device ... 93
10.3 Setting the communication parameters ... 93
10.3.1 Manually setting the IP address ... 93
10.3.2 Automatically setting the IP address ... 94
10.3.3 Ethernet host communication ... 94
10.3.4 TCP/IP ... 94
10.3.5 UDP ... 95
10.4 Additional settings for the BCL 308*i* ... 96
10.4.1 Decoding and processing the read data ... 96
10.4.2 Control of the decoding ... 98
10.4.3 Control of the switching outputs ... 99
10.5 Transmitting configuration data ... 100
10.5.1 Via the webConfig tool ... 100
10.5.2 Replacing a defective BCL 308*i* ... 100

11 Online commands ... 101
11.1 Overview of commands and parameters ... 101
11.1.1 General 'online' commands ... 102
11.1.2 'Online' commands for system control ... 109
11.1.3 'Online' commands for configuration of switching inputs/outputs ... 110
11.1.4 'Online' commands for the parameter set operations ... 113

12 Diagnostics and troubleshooting ... 120
12.1 General causes of errors ... 120
12.2 Interface errors ... 120

13 Type overview and accessories ... 122
13.1 Part number code ... 122
13.2 Type overview BCL 308*i* ... 123
13.3 Connection hood accessories ... 124
13.4 Accessory connectors ... 124
13.5 Accessory USB cable ... 124
13.6 Accessory mounting device ... 124

13.7 Reflector accessories for autoReflAct ... 124

13.8 Accessory ready-made cables for voltage supply ... 125
13.8.1 Contact assignment of PWR connection cable ... 125
13.8.2 Specifications of the cables for voltage supply ... 125
13.8.3 Order codes of the cables for voltage supply ... 125

13.9 Accessory ready-made cables for bus connection ... 125
13.9.1 General information ... 125
13.9.2 Contact assignments M12 Ethernet connection cables KB ET… ... 126
13.9.3 Technical data of the M12 Ethernet connection cables KB ET… ... 126
13.9.4 Order codes for M12 Ethernet connection cables KB ET… ... 127

14 Maintenance ... 128

14.1 General maintenance information ... 128

14.2 Repairs, servicing ... 128

14.3 Disassembling, packing, disposing ... 128

15 Appendix ... 129

15.1 Declaration of Conformity ... 129

15.2 ASCII character set ... 131

15.3 Bar code samples ... 135
15.3.1 Module 0.3 ... 135
15.3.2 Module 0.5 ... 136

Figure 2.1: Attachment of the stick-on labels with warning notices at the BCL 308*i* 12
Figure 3.1: BCL 308*i* - MS 308 hood with integrated M12 connectors 14
Figure 3.2: BCL 308*i* - MK 308 terminal hood with spring-loaded terminals..... 15
Figure 3.3: Cable fabrication for MK 308 terminal hood 15
Figure 4.1: Line scanner, line scanner with deflection mirror and oscillating-mirror scanner 22
Figure 4.2: Possible bar code orientation 24
Figure 4.3: BCL 308*i* device construction - line scanner 25
Figure 4.4: BCL 308*i* device construction -line scanner with deflection mirror 25
Figure 4.5: BCL 308*i* device construction - oscillating-mirror scanner..... 26
Figure 4.6: Device construction MS 308 hood with integrated connectors 27
Figure 4.7: Device construction MK 308 hood with integrated connectors 27
Figure 4.8: Deflection principle for the line scanner..... 28
Figure 4.9: Deflection principle for the line scanner with oscillating mirror add-on 29
Figure 4.10: Deflection principle for the raster scanner 30
Figure 4.11: Ethernet with star topology 32
Figure 4.12: Ethernet with linear topology 33
Figure 4.13: Reflector arrangement for autoReflAct 34
Table 5.1: Specifications of the BCL 308*i* line/raster scanners without heating 36
Table 5.2: Specifications of the BCL 308*i* oscillating-mirror scanners without heating 37
Table 5.3: Specifications of the BCL 308*i* deflection-mirror scanners without heating..... 38
Table 5.4: Specifications of the BCL 308*i* line/raster scanners with heating 40
Table 5.5: Specifications of the BCL 308*i* oscillating-mirror scanners with heating 40
Table 5.6: Specifications of the BCL 308*i* deflection mirror scanners with heating 41
Figure 5.1: Dimensioned drawing of complete overview of the BCL 308*i* with MS 3xx / MK 3xx 42
Figure 5.2: Dimensioned drawing BCL 308*i* line scanner S…102..... 43
Figure 5.3: Dimensioned drawing BCL 308*i* deflection mirror scanner S…100..... 44
Figure 5.4: Dimensioned drawing BCL 308*i* oscillating mirror scanner O…100..... 45
Figure 5.5: Dimensioned drawing of MS 3xx hood with integrated connectors / MK 3xx terminal hood..... 46
Figure 5.6: The most important characteristics of a bar code..... 47
Table 5.7: Raster line cover as a function of the distance 48
Figure 5.7: Zero position of the reading distance..... 49
Table 5.8: Reading conditions 49
Figure 5.8: "High Density" reading field curve for line scanner without deflection mirror..... 50
Figure 5.9: "High Density" reading field curve for line scanner with deflection mirror..... 50
Figure 5.10: "High Density" reading field curve for oscillating-mirror scanners 51
Figure 5.11: Lateral "High Density" reading field curve for oscillating-mirror scanners 51
Figure 5.12: "Medium Density" reading field curve for line scanner without deflection mirror 52
Figure 5.13: "Medium Density" reading field curve for line scanner with deflection mirror 52
Figure 5.14: "Medium Density" reading field curve for oscillating-mirror scanners..... 53
Figure 5.15: Lateral "Medium Density" reading field curve for oscillating-mirror scanners..... 53
Figure 5.16: "Low Density" reading field curve for line scanner without deflection mirror 54
Figure 5.17: "Low Density" reading field curve for line scanner with deflection mirror 54
Figure 5.18: "Low Density" reading field curve for oscillating-mirror scanners 55

Figure 5.19: Lateral "Low Density" reading field curve for oscillating-mirror scanners 55
Figure 5.20: "Ultra Low Density" reading field curve for line scanner without deflection mirror 56
Figure 5.21: "Ultra Low Density" reading field curve for line scanner with deflection mirror 56
Figure 5.22: "Ultra Low Density" reading field curve for oscillating-mirror scanners 57
Figure 5.23: Lateral "Ultra Low Density" reading field curve for oscillating-mirror scanners 57
Figure 6.1: Device name plate BCL 308*i* 58
Figure 6.2: Fastening options using M4x5 threaded holes 59
Figure 6.3: BT 56 mounting device 60
Figure 6.4: Mounting example of BCL 308*i* with BT 56 61
Figure 6.5: BT 59 mounting device 62
Figure 6.6: Total reflection – line scanner 64
Figure 6.7: Total reflection – line scanner 64
Figure 6.8: Total reflection – BCL 308*i* with oscillating mirror 65
Figure 6.9: Reading angle for the line scanner 66
Figure 7.1: Location of the electrical connections 68
Figure 7.2: BCL 308*i* - MS 308 hood with integrated M12 connectors 70
Figure 7.3: BCL 308*i* - MK 308 terminal hood with spring-loaded terminals 71
Figure 7.4: Cable fabrication for MK 308 terminal hood 72
Table 7.1: Pin assignment PWR / SW IN/OUT 73
Figure 7.1: Switching input connection diagram SWIO_1 and SWIO_2 74
Figure 7.2: Switching output connection diagram SWIO_1 / SWIO_2 75
Table 7.2: Pin assignment SERVICE – Mini-B type USB interface 76
Table 7.3: Pin assignment HOST / BUS IN BCL 308*i* 77
Figure 7.3: HOST / BUS IN cable assignments on RJ-45 77
Table 7.4: Pin assignment BUS OUTBCL 308*i* 78
Figure 7.4: Ethernet with star topology 79
Figure 7.5: Ethernet with linear topology 80
Table 7.5: Cable lengths and shielding 81
Figure 8.1: BCL 308*i* - LED indicators 82
Figure 8.2: MS 308/MK 308 - LED indicators 84
Figure 8.3: BCL 308*i* - Display 85
Figure 9.1: Connecting the SERVICE USB interface 87
Figure 9.2: The start page of the webConfig tool 89
Figure 9.3: Module overview in the webConfig tool 90
Figure 10.1: Storing configuration data in the webConfig tool 100
Table 12.1: General causes of errors 120
Table 12.2: Interface error 120
Table 13.2: Connection hoods for the BCL 308*i* 124
Table 13.3: Connectors for the BCL 308*i* 124
Table 13.4: Service cable for the BCL 308*i* 124
Table 13.5: Mounting devices for the BCL 308*i* 124
Table 13.6: Reflector for autoReflAct operation 124
Table 13.7: PWR cables for the BCL 308*i* 125

Figure 13.8: Cable structure of Industrial Ethernet connection cable 126
Table 13.9: Bus connection cables for the BCL 308*i*..... 127
Figure 15.1: Declaration of conformity BCL 308*i*..... 129
Figure 15.2: Connection hood / connector unit declaration of conformity..... 130
Figure 15.3: Bar code sample labels (module 0.3) 135
Figure 15.4: Bar code sample labels (module 0.5) 136

1 General information

1.1 Explanation of symbols

The symbols used in this technical description are explained below.

Attention!

This symbol precedes text messages which must strictly be observed. Failure to comply with this information results in injuries to personnel or damage to the equipment.

Attention Laser!

This symbol warns of possible danger caused by hazardous laser radiation.

Notice!

This symbol indicates text passages containing important information.

1.2 Declaration of conformity

The bar code readers of the BCL 300*i* series have been developed and manufactured in accordance with the applicable European standards and directives.

Notice!

You can find the Declaration of Conformity of the devices in the appendix of the manual on page 145.

The manufacturer of the product, Leuze electronic GmbH & Co KG in D-73277 Owen, possesses a certified quality assurance system in accordance with ISO 9001.

2 Safety notices

2.1 General safety notices

Documentation

All entries in this technical description must be heeded, in particular the present chapter "Safety notices". Keep this technical description in a safe place. It should be available at all times.

Safety regulations

Observe the locally applicable regulations and the rules of the employer's liability insurance association.

Repair

Repairs must only be carried out by the manufacturer or an authorized representative.

2.2 Safety standards

The bar code readers of the BCL 300*i* series were developed, manufactured and tested in accordance with the applicable safety standards. They correspond to the state of the art.

2.3 Approved purpose

Attention!

The protection of personnel and the device cannot be guaranteed if the device is operated in a manner not corresponding to its intended use.

Bar code readers of the BCL 300*i* series are conceived as stationary, high-speed scanners with integrated decoders for all current bar codes used for automatic object detection.

In particular, unauthorized uses include:

- in rooms with explosive atmospheres
- operation for medical purposes

Areas of application

The bar code readers of the BCL 300*i* series are especially designed for the following areas of application:

- Storage technology and materials handling, in particular for object identification on fast-moving transport systems
- Pallet transport systems
- Automobile sector
- Omnidirectional reading

2.4 Working safely

Attention!

Access and changes to the device, except where expressly described in this operating manual, are not authorized.

Safety regulations

Observe the locally applicable legal regulations and the rules of the employer's liability insurance association.

Qualified personnel

Mounting, commissioning and maintenance of the device must only be carried out by qualified personnel.
Electrical work must be carried out by a certified electrician.

Attention, laser radiation!

If you look into the beam path over a longer time period, the retina of your eye may be damaged!

Never look directly into the beam path!

Do not point the laser beam of the BCL 308i at persons!

When mounting and aligning the BCL 308i, avoid reflections of the laser beam off reflective surfaces!

The BCL 308i bar code readers correspond to the EN 60825-1 safety standard for a class 2 laser systems. They also comply with the U.S. 21 CFR 1040.10 regulations for a class II laser product except for deviations pursuant to Laser Notice No. 50, dated July 26, 2001.

Radiant Energy: The BCL 308i uses a low power visible laser diode. The emitted wavelength is 655 nm. The average laser power is less than 1 mW in accordance with the definition of laser class 2.

Adjustments: Do not attempt any adjustments to or alterations of this product.

Do not remove the protective housing of the bar code reader. There are no user-serviceable parts inside.

The glass optics cover is the only aperture through which laser radiation may be observed on this product. A failure of the scanner motor, while the laser diode continues to emit a laser beam, may cause emission levels to exceed those for safe operation. The bar code reader has protective devices to prevent this occurrence. If, however, a stationary beam is emitted, the failing bar code reader should be disconnected from the voltage supply immediately.

CAUTION: Use of controls or adjustments or performance of procedures other than specified herein may result in hazardous light exposure.

The use of optical instruments or devices in combination with the device increases the danger of eye damage!

The housing of the BCL 308i is provided with warning notices A and B above and next to the reading window as shown in the following figure:

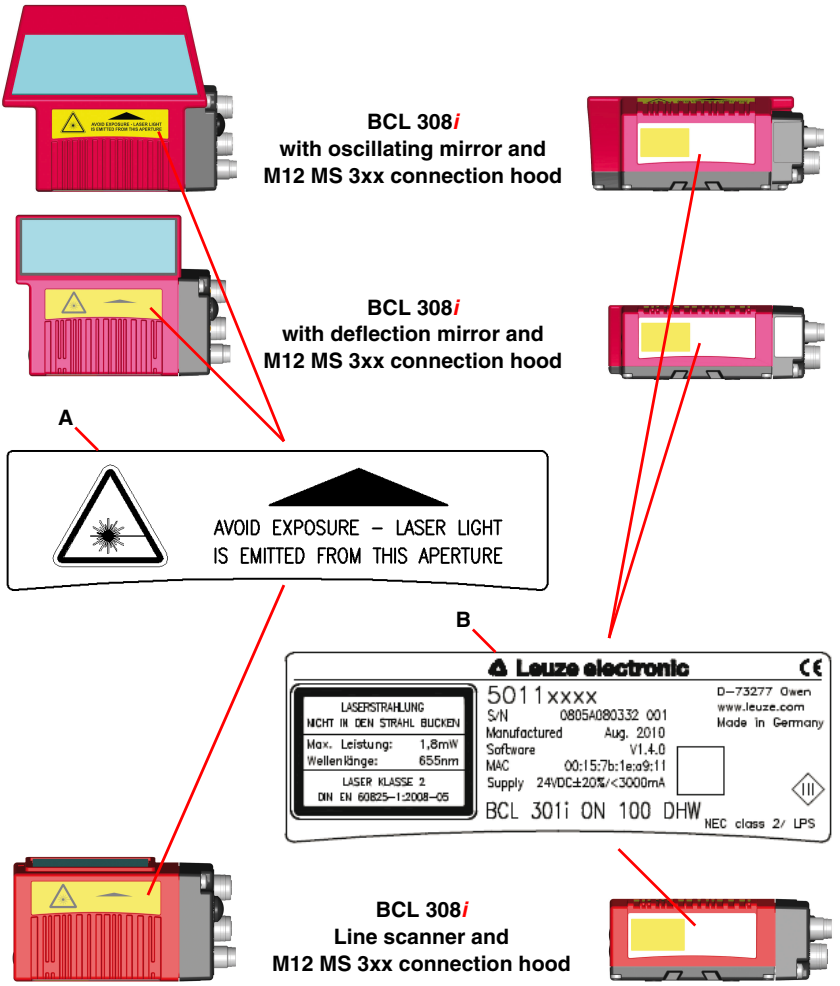

A	Warning: laser aperture
B	Name plate

Figure 2.1: Attachment of the stick-on labels with warning notices at the BCL 308*i*

3 Fast commissioning / operating principle

Below you will find a short description for the initial commissioning of the BCL 308*i*. Detailed explanations for all listed points can be found throughout this technical description.

3.1 Mounting the BCL 308*i*

The BCL 308*i* bar code readers can be mounted in two different ways:

- Via four M4x6 screws on the bottom of the device.
- Via a BT 56 mounting device in the fastening groove on the bottom of the housing.

3.2 Device arrangement and selection of the mounting location

In order to select the right mounting location, several factors must be considered:

- Size, orientation, and position tolerance of the bar codes on the objects to be scanned.
- The reading field of the BCL 308*i* in relation to the bar code module width.
- The resulting minimum and maximum reading distance from the respective reading field.
- The permissible cable lengths between the BCL 308*i* and the host system depending on which interface is used.
- The correct time for data output. The BCL 308*i* should be positioned in such a way that, taking into consideration the time required for data processing and the conveyor belt speed, there is sufficient time to e.g. initiate sorting operations on the basis of the read data.
- The display and control panel should be very visible and accessible.
- For configuring and commissioning with the webConfig tool, the USB interface should be easily accessible.

For specific information, please refer to chapter 6 and chapter 7.

Notice!

The beam exits the BCL 308i as follows for the respective devices:
*- line scanner **parallel** to the **housing base***
*- deflection mirror **105 degrees** to the **housing base***
*- oscillating mirror **perpendicular** to the **housing base.***
The black areas in figure 6.2 are the housing base. The best read results are obtained when:

- *The BCL 308i is mounted in such a way that the scanning beam is incident on the bar code at an angle of inclination greater than ±10° … 15° to vertical.*
- *The reading distance lies in the middle area of the reading field.*
- *The bar code labels are of good print quality and have good contrast ratios.*
- *You do not use high-gloss labels.*
- *There is no direct sunlight.*

3.3 Electrical connectionBCL 308*i*

For the electrical connection of the BCL 308*i*, 2 connection variants are available.

The **voltage supply** (18 … 30 VDC) is connected acc. to the connection type selected.

2 freely programmable switching inputs/outputs for individual adaptation to the respective application are also available here. Detailed information on this topic can be found in chapter 7.4.1 and chapter 7.4.3.

MS 308 hood with 2 integrated M12 connectors

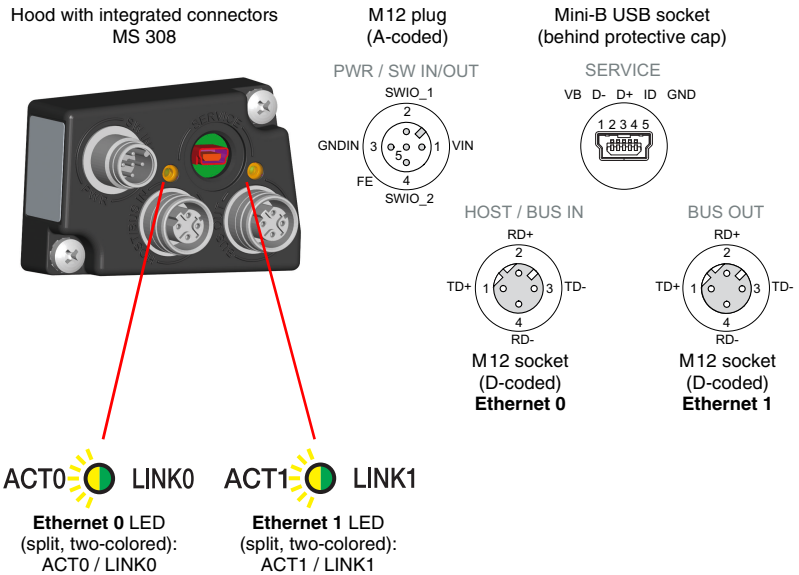

Figure 3.1: BCL 308*i* - MS 308 hood with integrated M12 connectors

Notice!

The shielding connection is done via the M12 connector housing.

Notice!

The integrated parameter memory for the simple replacement of the BCL 308i is located in the MS 308. In the integrated parameter memory, both the settings and the network address are saved and transmitted to a new device.

Notice!

In the case of Ethernet line topology, the network is interrupted when the BCL 308i is removed from the MS 308.

MK 308 terminal hood with spring-loaded terminals

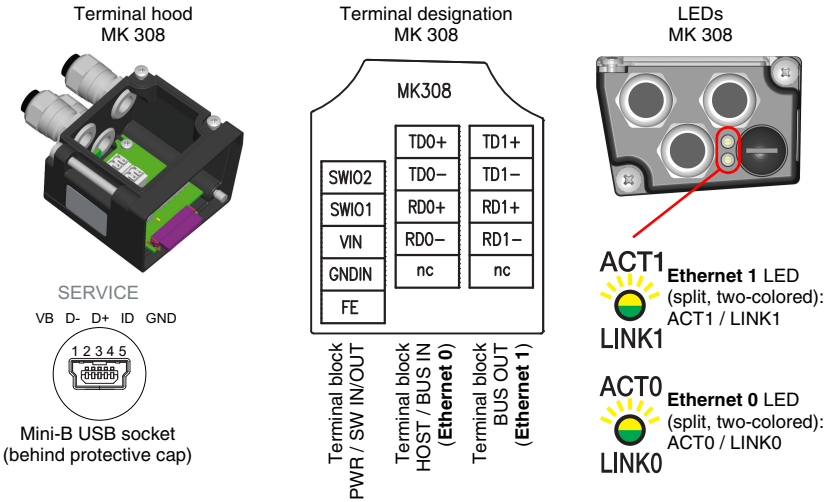

Figure 3.2: BCL 308*i* - MK 308 terminal hood with spring-loaded terminals

Notice!

The integrated parameter memory for simple exchange of the BCL 308i is located in the MK 308. In the integrated parameter memory, both the settings and the network address are saved and transmitted to a new device.

Notice!

In the case of Ethernet line topology, the network is interrupted when the BCL 308i is removed from the MK 308.

Cable fabrication and shielding connection

Remove approx. 78mm of the connection cable sheathing. 15mm of sheath of the shielded line must be freely accessible.

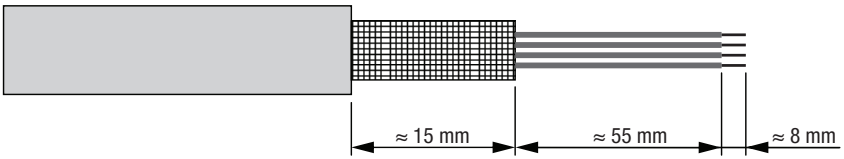

Figure 3.3: Cable fabrication for MK 308 terminal hood

The shield is automatically contacted when the cable is lead into the metal screw fitting and fastened when the cord grip is closed. Then lead the individual wires into the terminals according to the diagram. Wire end sleeves are not necessary.

3.4 Preparatory Ethernet settings

↳ *Connect the +18 … 30 VDC supply voltage (typ. +24 VDC); the BCL 308i starts up.*

As a first step, you need to set the communication parameters of the BCL 308*i*. You can make the necessary settings via the webConfig tool. Detailed information on this topic can be found in chapter 10.

3.4.1 Manually setting the IP address

If your system does not include a DHCP server or if the IP addresses of the devices are to be set permanently, proceed as follows:

↳ *Have the network administrator specify the data for IP address, net mask and gateway address of the BCL 308i.*

↳ *Set these values on the BCL 308i:*

Via webConfig:

`Configuration -> Communication -> Ethernet interface`

Notice!

*If the setting is performed via the webConfig tool, the BCL 308i must be **restarted**. Only after this restart is the set IP address accepted and does it become active.*

3.4.2 Automatically setting the IP address

If your system includes a DHCP server that is to be used to assign the IP addresses, proceed as follows:

↳ *Activate the DHCP Client mode in the BCL 308i.*

Via webConfig:

`Configuration -> Communication -> Ethernet interface`

Activate the `DHCP` = ON setting there.

3.4.3 Defining Ethernet host communication

The Ethernet host communication enables the configuration of connections to an external host system. Both UDP as well as TCP/IP (in either client or server mode) can be used. The connection-free UDP protocol is used primarily to transfer process data to the host (monitor operation). The connection-oriented TCP/IP protocol can also be used to transfer commands from the host to the device. With this connection, the data is backed up by the TCP/IP protocol itself.

If you would like to use the TCP/IP protocol, you must also define whether the BCL 308*i* is to operate as a TCP client or as a TCP server.

Both protocols can be activated simultaneously and used in parallel.

↳ *Contact your network administrator to determine which communication protocol is used.*

3.4.4 TCP/IP

↳ *Activate the TCP/IP protocol*

↳ *Set the TCP/IP mode of the BCL 308i*

In **TCP client mode**, the BCL 308*i* actively establishes the connection to the primary host system (PC / PLC as server). The BCL 308*i* requires from the user the IP address of the server (host system) and the port number on which the server (host system) accepts a connection. In this case, the BCL 308*i* determines when and with whom a connection is established!

↳ *With a BCL 308i as TCP client, also set the following values:*

- IP address of the TCP server (normally the PLC/host computer)
- Port number of the TCP server
- Timeout for the wait time for an answer from the server
- Repetition time for renewed communication attempt following a timeout

In **TCP server mode**, the primary host system (PC / PLC) actively establishes the connection and the connected BCL 308*i* waits for the connection to be setup. The TCP/IP stack requires information from the user regarding the local port of the BCL 308*i* (port number) on which the connection requests of a client application (host system) are to be accepted. If there is a connection request and a connection is established by the primary host system (PC / PLC as client), the BCL 308*i* (server mode) accepts the connection. Data can then be sent and received.

↳ *With a BCL 308i as TCP server, also set the following values:*

- Port number for the communication of the BCL 308*i* with the TCP client

The corresponding adjustment options can be found:

- Via webConfig:
  `Configuration -> Communication -> Host communication`

3.4.5 UDP

The BCL 308*i* requires from the user the IP address and the port number at which the communication partner receives data. Correspondingly, the host system (PC / PLC) now also requires the set IP address of the BCL 308*i* and the selected port number. This assignment notifies both communication partners of which port the data is received on.

↳ *Activate the UDP protocol*

↳ *Also set the following values:*

- IP address of the communication partner
- Port number of the communication partner

The corresponding adjustment options can be found:

- Via webConfig:
  `Configuration -> Communication -> Host communication`

3.5 Further settings

After the basic configuration of the operating mode and the communication parameters, you need to carry out further settings:

- Decoding and processing the read data

  ↳ *Define at least one code type with the desired settings.*

  - Via webConfig:
    `Configuration -> Decoder`

- Control of the decoding

  ↳ *Configure the connected switching inputs according to your requirements. To do this, first set the I/O mode to Input and then configure the switching behavior:*

  - Via webConfig:
    `Configuration -> Device -> Switching inputs/outputs`

- Control of the switching outputs

  ↳ *Configure the connected switching outputs according to your requirements. To do this, first set the I/O mode to Output and then configure the switching behavior:*

  - Via webConfig:
    `Configuration -> Device -> Switching inputs/outputs`

3.6 Starting the device

Connect the +18 … 30 VDC supply voltage (typ. +24 VDC).

The BCL 308*i* starts up, the **PWR** and **BUS** LEDs display the operating state. If there is a display, the bar code reading window appears in it.

PWR LED

PWR	**green continuous light**	**Power On, device OK**
PWR	**green, briefly off - on**	**Good read, successful reading**
PWR	**green, briefly off - briefly red - on**	**No read, reading not successful**
PWR	**orange continuous light**	**Service mode**
PWR	**flashes red**	**Warning set**
PWR	**red continuous light**	**Error, device error**

BUS LED

BUS	**flashes green**	**Initialization**
BUS	**green continuous light**	**Network operation OK**
BUS	**flashes red**	**Communication error**
BUS	**red continuous light**	**Network error**

LED ACT0 / LINK0 (on the MS 308/MK308)

green continuous light	**Ethernet connected (LINK)**
yellow flickering light	**Data communication (ACT)**

LED ACT1 / LINK1 (on the MS 308/MK308)

green continuous light	**Ethernet connected (LINK)**
yellow flickering light	**Data communication (ACT)**

If a display is available, the following information appears successively during startup:

- `Startup`
- Device designation e.g. `BCL 308i SM 102 D`
- `Reading Result`

If `Reading Result` is displayed, the device is ready.

Operation of BCL 308i

After voltage (18 … 30 VDC) has been connected to the switching input, a read process is activated. In the standard setting, all common code types for decoding are released; only the **2/5 interleaved** code type is limited to 10 digits of code content.

If a code is moved through the reading field, the code content is decoded and forwarded to the superior system (PLC/PC) via the Ethernet.

3.7 Bar code reading

To test, you can use the following bar code in the 2/5 Interleaved format. The bar code module here is 0.5:

Provided your BCL 308*i* model has a display, the read information appears on this display. The **PWR** LED goes off briefly and then turns green again. Simultaneously, the read information is forwarded to the superior system (PLC/PC) via the Ethernet.

Please check the incoming data of the bar code information there.

Alternatively, you can use a switching input for read activation (switching signal of a photoelectric sensor or 24 V DC switching signal).

4 Device description

4.1 About the bar code readers of the BCL 300*i* series

Bar code readers of the BCL 300*i* series are high-speed scanners with integrated decoder for all commonly used bar codes, e.g. 2/5 Interleaved, Code 39, Code 128, EAN 8/13 etc., as well as codes from the GS1 DataBar family.

Bar code readers of the BCL 300*i* series are available in various optics models as well as line scanners, line scanners with deflection mirrors, oscillating mirrors and also optionally as heated models.

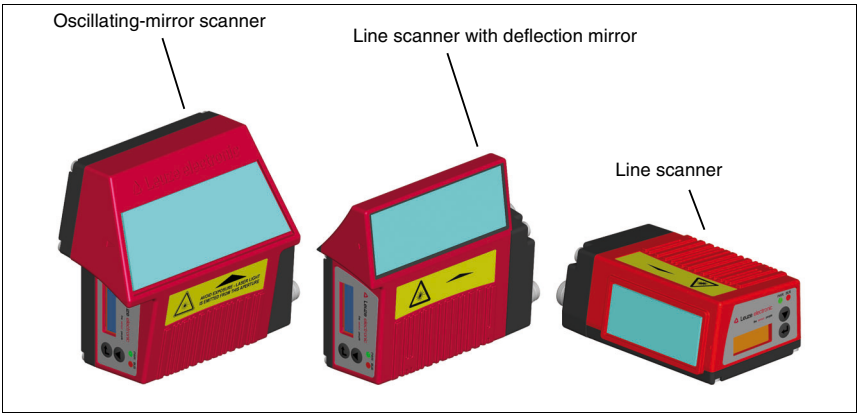

Figure 4.1: Line scanner, line scanner with deflection mirror and oscillating-mirror scanner

The extensive options for device configuration enable adaptation to a multitude of reading tasks. Due to the large reading distance combined with the great depth of field, a large opening angle and a very compact construction, the device is ideally suited for the conveyor and storage technology market.

The interfaces (**RS 232**, **RS 485** and **RS 422**) integrated in the various device models and the fieldbus systems (**PROFIBUS DP**, **PROFINET-IO** and **Ethernet**) offer optimum connection to the superior host system.

4.2 Characteristics of the bar code readers of the BCL 300*i* series

Performance characteristics:

- Integrated fieldbus connectivity = *i* -> Plug-and-Play fieldbus coupling and easy networking
- Numerous interface variants facilitate connection to the superior systems
  - RS 232, RS 422
  - RS 485 and multiNet plus slave

  alternatively, various fieldbus systems, such as
  - PROFIBUS DP
  - PROFINET-IO
  - EtherNet
- Integrated code fragment technology (**CRT**) enables the identification of soiled or damaged bar codes
- Maximum depth of field and reading distances from 30 mm to 700 mm
- Large optical opening angle and, thus, large reading field width
- High scanning rate of 1000 scans/s for fast reading tasks
- On request with display to easily detect and activate functions and status messages.
- Integrated USB service interface, Mini-B type
- Adjustment of all device parameters with a web browser
- Easy alignment- and diagnostics functions
- Up to four possible connection technologies
- Two freely programmable switching inputs/outputs for the activation or signaling of states
- Automatic monitoring of the read quality with **autoControl**
- Automatic recognition and setting of the bar code type using **autoConfig**
- Reference code comparison
- Optional heating models to -35 °C
- Heavy-duty housing of protection class IP 65

Notice!

Information on technical data and characteristics can be found in Kapitel 5.

General information

The integrated fieldbus connectivity = *i* contained in the bar code readers of the BCL 300*i* series facilitates the use of identification systems which function without connector unit or gateways. The integrated fieldbus interface considerably simplifies handling. The Plug-and-Play concept enables easy networking and very simple commissioning: Directly connect the respective fieldbus and all configuration is performed with no additional software.

For decoding bar codes, the bar code readers of the BCL 300*i* series make available the proven **CRT decoder** with code fragment technology:

The proven code fragment technology (**CRT**) enables bar code readers of the BCL 300*i* series to read bar codes with a small bar height, as well as bar codes with a damaged or soiled print image.

With the aid of the **CRT decoder**, bar codes can also be read without problem in other demanding situations, such as with a large tilt angle (azimuth angle or even twist angle).

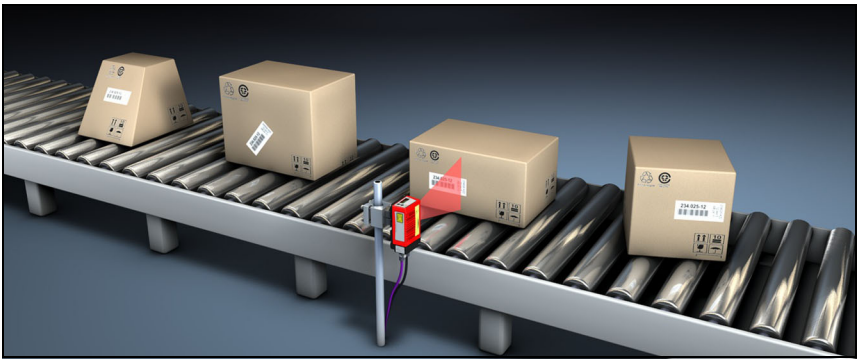

Figure 4.2: Possible bar code orientation

The BCL 308*i* can be operated and configured using the integrated webConfig tool via the USB service interface; alternatively, the bar code readers can be adjusted using configuration commands via the host/service interface.

The BCL 308*i* needs a suitable activation to start a read process as soon as an object is in the reading field. This opens a time window ("reading gate") in the BCL 308*i* for the read process during which the bar code reader has time to detect and decode a bar code.

Alternative activation options include online commands via the host interface and the In the basic setting, triggering takes place through an external reading cycle signal. Alternative activation options include online commands via the host interface and the **autoReflAct** function.

Through the read operation, the BCL 308*i* collects additional useful pieces of data for diagnosis which can also be transmitted to the host. The quality of the read operation can be inspected using the **alignment mode** which is integrated in the webConfig tool.

An optional display in English with buttons is used to operate the BCL 308*i* as well as for visualization purposes. Two LEDs provide additional optical information on the current operating state of the device.

The two freely configurable switching inputs/outputs **SWIO1** and **SWIO2** can be assigned various functions and control e.g. activation of the BCL 308*i* or external devices, such as a PLC.

System, warning and error messages provide assistance in setup/troubleshooting during commissioning and read operation.

4.3 Device construction

BCL 308i bar code readers

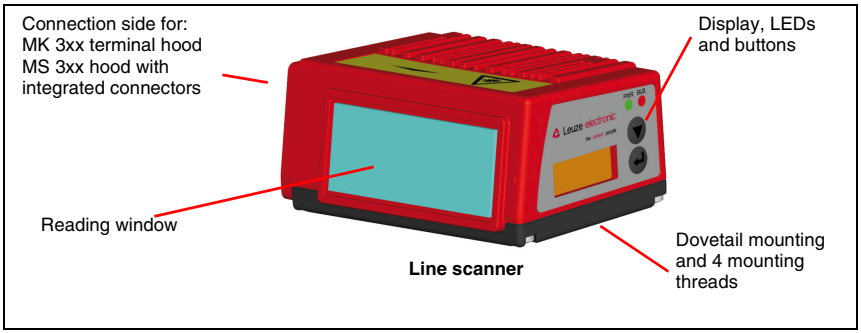

Figure 4.3: BCL 308*i* device construction - line scanner

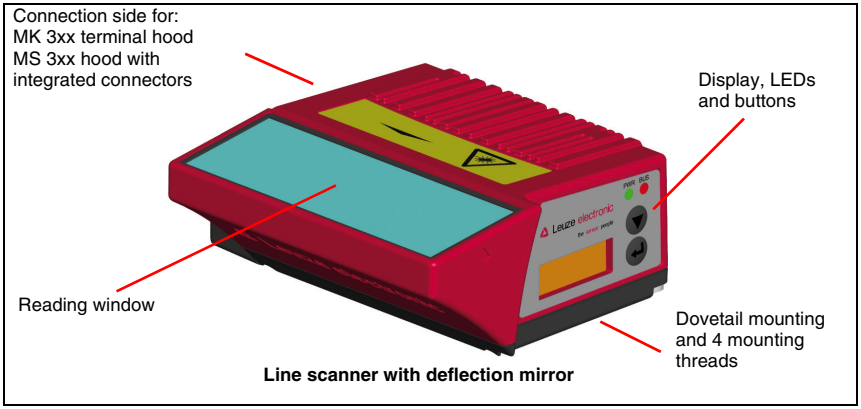

Figure 4.4: BCL 308*i* device construction -line scanner with deflection mirror

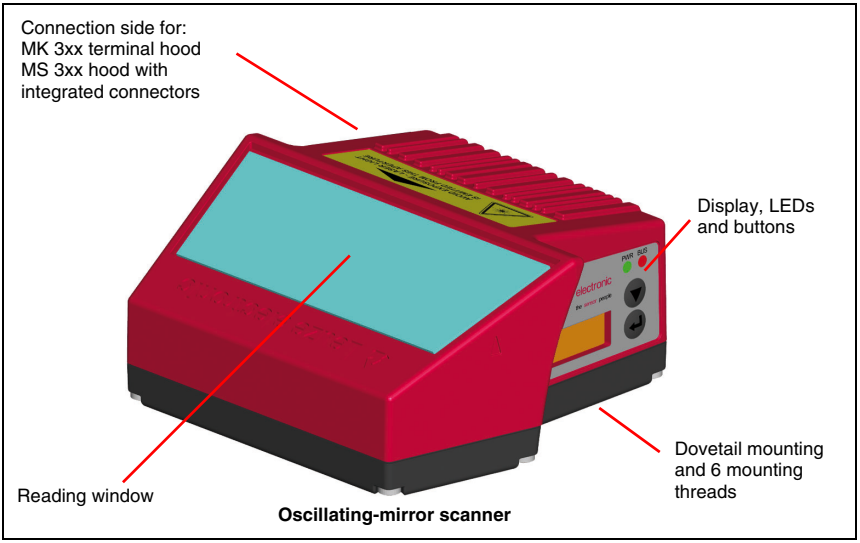

Figure 4.5: BCL 308*i* device construction - oscillating-mirror scanner

MS 308 hood with integrated connectors

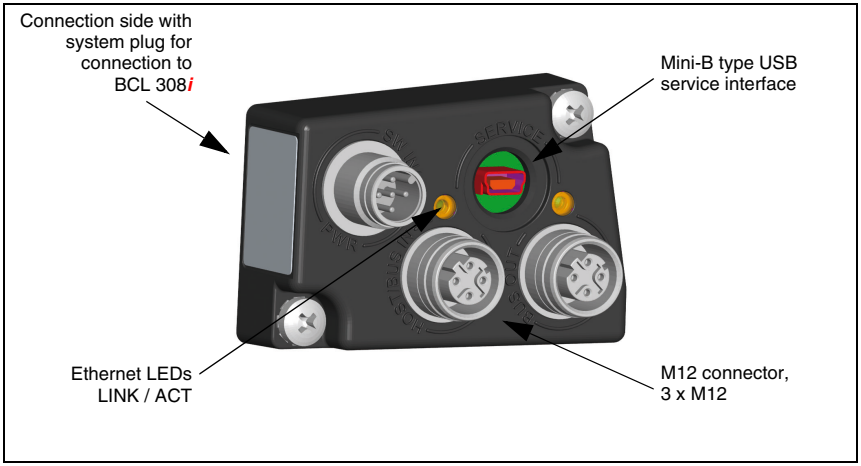

Figure 4.6: Device construction MS 308 hood with integrated connectors

MK 308 terminal hood

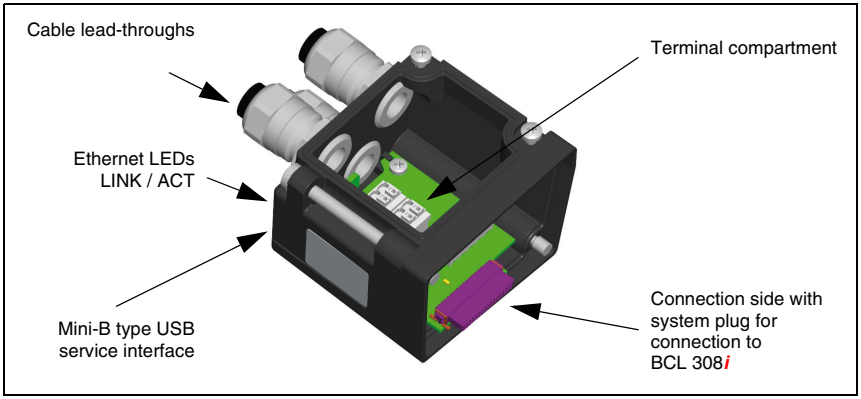

Figure 4.7: Device construction MK 308 hood with integrated connectors

4.4 Reading techniques

4.4.1 Line scanner (single line)

A line (scan line) scans the label. Due to the opt. opening angle, the reading field width is dependent on the read distance. Through the movement of the object, the entire bar code is automatically transported through the scan line.

The integrated code fragment technology permits twisting of the bar code (tilt angle) within certain limits. These are dependent on the transport speed, the scanning rate of the scanner and the bar code properties.

Areas of application of the line scanner

The line scanner is used:

- when the bars of the bar code are printed in the conveying direction ('ladder arrangement').
- with bar codes having very short bar lengths.
- when the ladder code is turned out of the vertical position (tilt angle).
- when the reading distance is large.

Figure 4.8: Deflection principle for the line scanner

4.4.2 Line scanner with oscillating mirror

The oscillating mirror deflects the scan line additionally to both sides across the scan direction at a randomly adjustable oscillation frequency. In this way, the BCL 308*i* can also scan larger areas or spaces for bar codes. The reading field height (and the scan line length useful for evaluation) depends on the reading distance due to the optical opening angle of the oscillating mirror.

Areas of application of the line scanner with oscillating mirror

For line scanners with oscillating mirror, oscillation frequency, start/stop position etc. are adjustable. It is used:

- when the position of the label is not fixed, e.g. on pallets – various labels can, thus, be detected at various positions.
- when the bars of the bar code are printed perpendicular to the conveying direction ('picket fence arrangement').
- when reading stationary objects.
- when a large reading field (reading window) has to be covered.

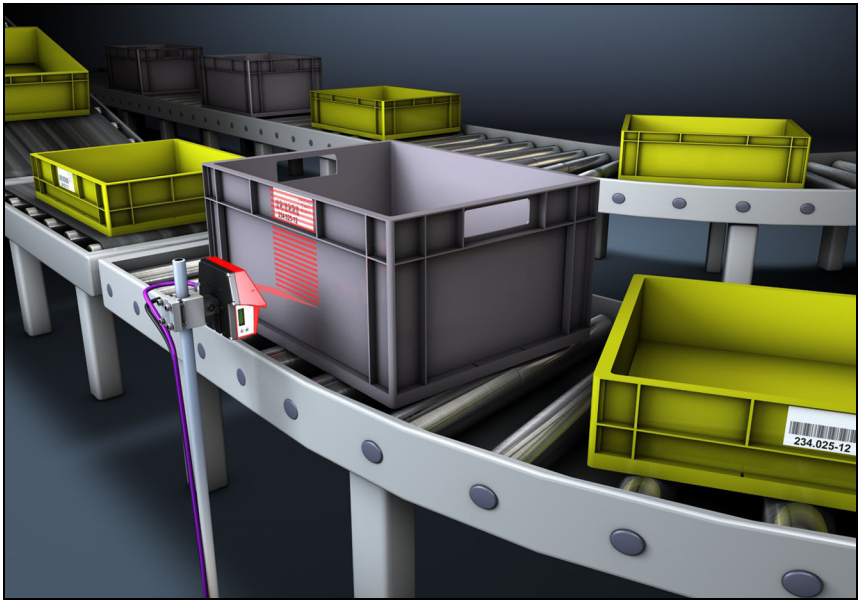

Figure 4.9: Deflection principle for the line scanner with oscillating mirror add-on

4.4.3 Raster scanner (Raster Line)

Multiple scan lines scan the label. Due to the optical opening angle, the reading field width is dependent on the reading distance. Provided the code is located in the reading field, it can be read during standstill. If the code moves through the reading field, it is scanned by multiple scan lines.

The integrated code fragment technology permits twisting of the bar code (tilt angle) within certain limits. These are dependent on the transport speed, the scanning rate of the scanner and the bar code properties. In most cases, everywhere a line scanner is used, a raster scanner can be used.

Areas of application of the raster scanner:

The raster scanner is used:

- when the bars of the bar code are perpendicular to the conveying direction ('picket fence arrangement')
- with bar codes with low height displacement
- with very glossy bar codes

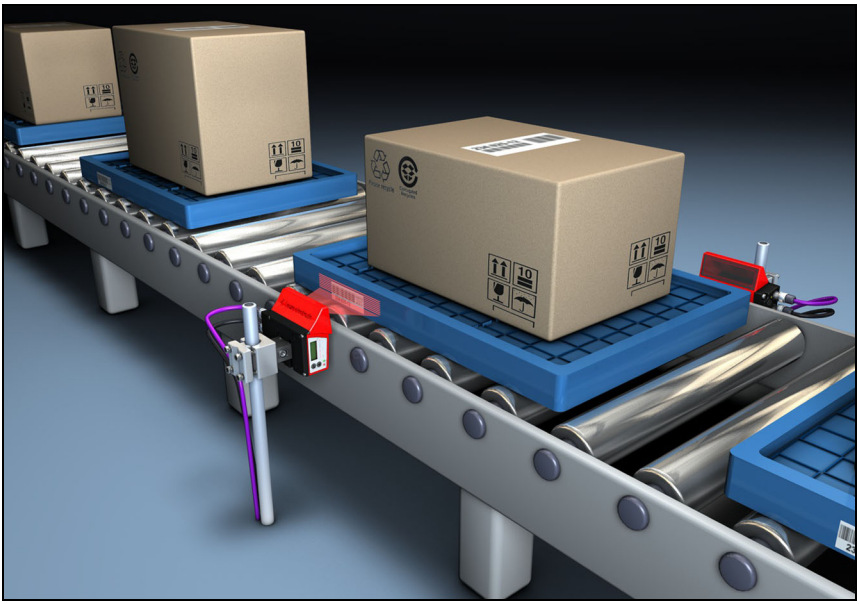

Figure 4.10: Deflection principle for the raster scanner

4.5 Fieldbus systems

Various product variants of the BCL 300*i* series are available for connecting to different fieldbus systems such as PROFIBUS DP, ProfiNet and Ethernet.

4.5.1 EtherNet

The BCL 308*i* is designed as an Ethernet device (acc. to IEEE 802.3) with a standard baud rate of 10/100 Mbit. A fixed MAC ID is assigned to each BCL 308*i* by the manufacturer; this ID cannot be changed.

The BCL 308*i* automatically supports the transmission rates of 10 Mbit/s (10Base T) and 100 Mbit/s (100Base TX), as well as auto-negotiation and auto-crossover.

The BCL 308*i* features multiple M12 connectors / sockets for the electrical connection of the supply voltage, the interface and the switching inputs and outputs. Additional information on the electrical connection can be found in Kapitel 7.

The BCL 308*i* supports the following protocols and services:

- TCP / IP (Client / Server)
- UDP
- DHCP
- Telnet
- HTTP
- ARP
- PING

For communication with the superior host system, the corresponding TCP/IP protocol (client/server mode) or UDP must be selected.

Further information on commissioning can be found in Kapitel 10.

4.5.2 Ethernet – star topology

The BCL 308*i* can be operated as a single device (stand-alone) in an Ethernet star topology with individual IP address.

The IP address can either be set permanently via the webConfig tool or assigned dynamically via a DHCP server.

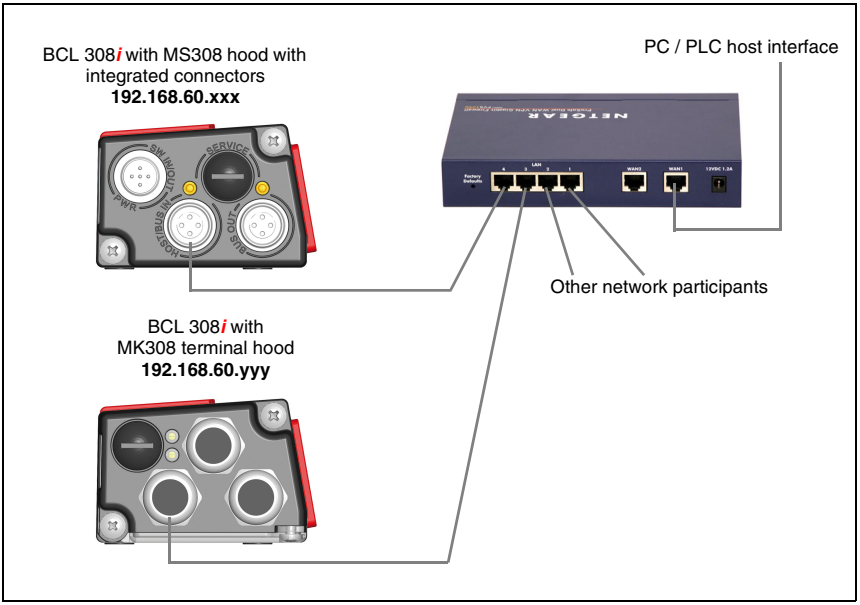

Figure 4.11: Ethernet with star topology

4.5.3 Ethernet – linear topology

The innovative further development of the BCL 308*i* with integrated switch functionality offers the option of connecting multiple bar code readers of type BCL 308*i* to one another without direct connection to a switch. In addition to the classic "star topology", a "linear topology" is thus also possible.

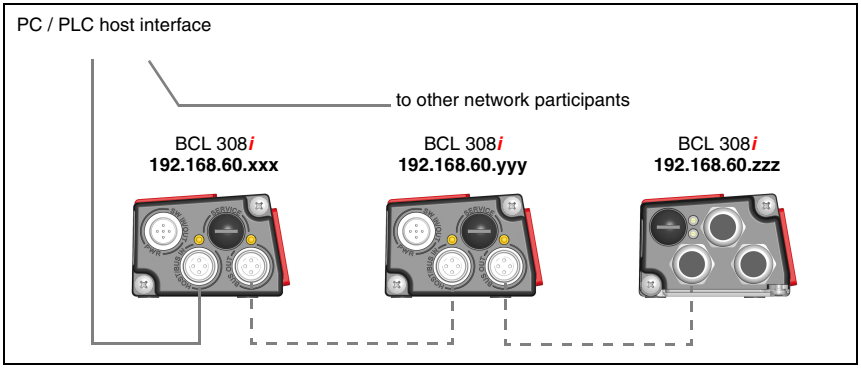

Figure 4.12: Ethernet with linear topology

Each participant in this network requires its own unique IP address which must be assigned via the display or webConfig tool; alternatively, the DHCP method can also be used.

The maximum length of a segment (connection from the hub to the last participant) is limited to 100 m.

4.6 Heater

For low-temperature applications to min. -35°C (e.g. in cold storage), the bar code readers of the BCL 308*i* series can optionally be permanently fitted with a built-in heating and these bar code readers purchased as separate device models.

4.7 autoReflAct

AutoReflAct stands for **Auto**matic **Refl**ector **Act**ivation and permits an activation without additional sensors. This is achieved by directing the scanner with reduced scanning beam towards a reflector mounted behind the conveyor path.

Notice!

Compatible reflectors are available on request.

As long as the scanner is targeted at the reflector, the reading gate remains closed. If, however, the reflector is blocked by an object such as a container with a bar code label, the scanner activates the read procedure, and the label on the container is read. When the path from the scanner to the reflector has cleared, the read procedure has completed and the scanning beam is reduced and again directed onto the reflector. The reading gate is closed.

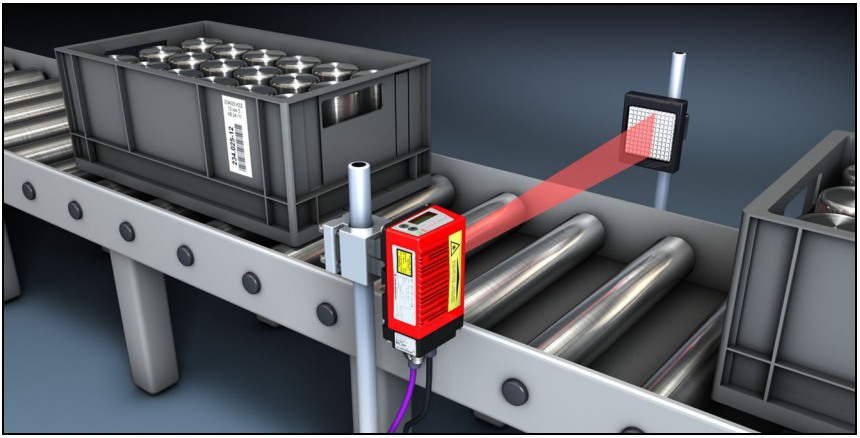

Figure 4.13: Reflector arrangement for autoReflAct

The **autoReflAct** function uses the scanning beam to simulate a photoelectric sensor and thus permits an activation without additional sensor system.

4.8 Reference codes

The BCL 308*i* offers the possibility of storing one or two reference codes.

It is possible to store the reference codes via the webConfig tool or via online commands.

The BCL 308*i* can compare read bar codes with one and/or both reference codes and execute user-configurable functions depending on the comparison result.

4.9 autoConfig

With the autoConfig function, the BCL 308*i* offers the user who only wishes to simultaneously read one code type (symbology) with one number of digits an extremely simple and convenient configuration option.

After starting the autoConfig function via the switching input or from a superior control, it is sufficient to position a bar code label with the desired code type and number of digits in the reading field of the BCL 308*i*.

Afterward, bar codes with the same code type and number of digits are recognized and decoded.

5 Specifications

5.1 General specifications of the bar code readers

5.1.1 Line scanner / raster scanner

Type	BCL 308*i* EtherNet
Type	**Line scanner without heating**
Optical data	
Light source	Laser diode λ = 655nm (red light)
Beam exit	Front
Scanning rate	1000 scans/s
Beam deflection	by means of rotating polygon wheel
Useful opening angle	max. 60°
Optics models / resolution	High Density (**N**): 0.127 … 0.20mm Medium Density (**M**): 0.20 … 0.5mm Low Density (**F**): 0.30 … 0.5mm Ultra Low Density (**L**): 0.35 … 0.8mm
Reading distance	see reading field curves
Laser class	2 (acc. to EN 60825-1 and 21 CFR 1040.10 with Laser Notice No. 50)
Bar code data	
Code types	2/5 Interleaved, Code 39, Code 128, EAN 128, EAN / UPC, Codabar, Code 93, GS1 DataBar, EAN Addendum
Bar code contrast (PCS)	>= 60%
External light tolerance	2000 lx (on the bar code)
Number of bar codes per scan	3
Electrical data	
Interface type	2x Ethernet on 2x M12 (D-coded)
Protocols	Ethernet TCP/IP (Client/ Server) / UDP
Baud rate	10/100MBaud
Data formats	
Service interface	Mini-B type USB 2.0 socket
Switching input / switching output	2 switching inputs/outputs, freely programmable functions - Switching input: 18 … 30VDC depending on supply voltage, I max. = 8mA - Switching output: 18 … 30VDC, depending on supply voltage, I max. = 60mA (short-circuit proof) Switching inputs/outputs protected against polarity reversal!
Operating voltage	18 … 30VDC (Class 2, safety class III)
Power consumption	max. 3.7W
Operating and display elements	
Display	monochromatic graphical display, 128 x 32 pixel, with background lighting
Keyboard	2 buttons
LEDs	2 LEDs for power (PWR) and bus state (BUS), two-colored (red/green)

Table 5.1: Specifications of the BCL 308*i* line/raster scanners without heating

Type	BCL 308*i* EtherNet
Type	**Line scanner without heating**
Mechanical data	
Protection class	IP 65 1)
Weight	270 g (without connection hood)
Dimensions (WxHxD)	44 x 95 x 68 mm (without connection hood)
Housing	diecast aluminum
Environmental data	
Operating temperature range	0 °C … +40 °C
Storage temperature range	-20 °C … +70 °C
Air humidity	max. 90 % rel. humidity, non-condensing
Vibration	IEC 60068-2-6, test FC
Shock	IEC 60068-2-27, test Ea
Continuous shock	IEC 60068-2-29, test Eb
Electromagnetic compatibility	EN 55022; IEC 61000-6-2 (contains IEC 61000-4-2, -3, -4, -5 and -6) 2)

Table 5.1: Specifications of the BCL 308*i* line/raster scanners without heating

1) Only with the MS 308 or MS 308 connection hood and screwed-on M 12 connectors or cable leadthroughs and mounted caps. Minimum tightening torque of the housing connection screws on the connection hood 1.4 Nm!

2) This is a Class A product. In a domestic environment this product may cause radio interference, in which case the operator may be required to take adequate measures.

Attention!

For UL applications, use is permitted exclusively in Class 2 circuits according to NEC (National Electric Code).

The BCL 308i bar code readers are designed in accordance with safety class III for supply by PELV (protective extra-low voltage).

5.1.2 Oscillating-mirror scanner

Technical data same as for line scanner without heating with the following differences:

Type	BCL 308*i* EtherNet
Type	**Oscillating-mirror scanner without heating**
Optical data	
Beam exit	Lateral zero position at an angle of 90°
Beam deflection	Via rotating polygon wheel (horizontal) and stepping motor with mirror (vertical)
Oscillation frequency	0 … 10Hz (adjustable, max. frequency is dependent on set swivel angle)
Max. swivel angle	±20°(adjustable)
Reading field height	see reading field curves
Electrical data	
Power consumption	max. 4.9W
Mechanical data	
Weight	580g (without connection hood)
Dimensions (WxHxD)	58 x 125 x 110mm (without connection hood)

Table 5.2: Specifications of the BCL 308*i* oscillating-mirror scanners without heating

5.1.3 Line scanner / raster scanner with deflection mirror

Technical data same as for line scanner without heating with the following differences:

Type	BCL 308*i* EtherNet
Type	**Line scanner with deflection mirror without heating**
Optical data	
Beam exit	Lateral zero position at an angle of 105°
Beam deflection	Via rotating polygon wheel (horizontal) and deflection mirror (vertical)
Electrical data	
Power consumption	max. 3.7W
Mechanical data	
Weight	350g (without connection hood)
Dimensions (WxHxD)	44 x 103 x 96mm (without connection hood)

Table 5.3: Specifications of the BCL 308*i* deflection-mirror scanners without heating

5.2 Heating models of the bar code readers

The BCL 308*i* bar code readers are optionally available as models with integrated heating. In this case, heating is permanently installed ex works. Self-installation on-site by the user is not possible!

Features

- Integrated heating (permanently installed)
- Extends the application range of the BCL 308*i* to -35°C
- Supply voltage 24VDC ±20%
- BCL 308*i* enabling through an internal temperature switch (switch-on delay about 30min for 24VDC and minimum ambient temperature of -35°C)
- Necessary conductor cross-section for the voltage supply: at least 0.75mm²; the use of ready-made cables is, thus, not possible

Construction

The heating consists of two parts:

- The front cover heater
- The housing heater

Function

When the 24VDC supply voltage is applied to the BCL 308*i*, a temperature switch initially only connects the heating to current (front cover heater and housing heater). During the heating phase (around 30min), when the inside temperature rises above 15°C, the temperature switch connects the BCL 308*i* to the supply voltage. This is followed by the self test and the changeover to read operation. The "**PWR**" LED lights up, showing overall readiness for operation.

When the inside temperature reaches approximately 18 °C, another temperature switch turns the housing heater off and, if necessary, back on again (if the inside temperature drops below 15°C). This does not interrupt the read operation. The front cover heater remains activated until an inside temperature of 25°C is reached. At temperatures above this, the front cover heater switches off and, with a switching hysteresis of 3°C, back on again at an inside temperature below 22°C.

Mounting location

Notice!

The mounting location is to be selected such that it does not expose the BCL 308i with heating directly to a cold air stream. To achieve an optimal heating effect, the BCL 308i should be mounted so that it is thermally isolated.

Electrical connection

The required core cross section of the connection cable for the voltage supply must be at least 0.75 mm².

Attention!

The voltage supply must not be looped through from one device to the next.

Power consumption

The energy requirement depends on the model:

- the line/raster scanner with heating typically consumes a maximum of 17W power.
- the line scanner with oscillating mirror and heating typically consumes a maximum of 26W power.
- the line/raster scanner with deflection mirror and heating typically consumes a maximum of 19W power.

These values are based on operation with unconnected switching outputs.

5.2.1 Line scanner / raster scanner with heater

Technical data same as for line scanner without heating with the following differences:

Type	**BCL 308*i*** EtherNet
Type	**Line scanner with heater**
Electrical data	
Operating voltage	24VDC ±20%
Power consumption	max. 17.7W
Structure of the heating	Housing heating and separate heating of the optics glass
Warmup time	Min. 30min at +24VDC and an ambient temperature of -35°C
Min. conductor cross section	Conductor cross section of at least 0.75mm² for the supply voltage supply line. Wiring through of the voltage supply to multiple heating devices is **not** permissible. Standard, M12 ready-made cable **not** usable (insufficient cable cross-section)
Environmental data	
Operating temperature range	-35°C … +40°C
Storage temperature range	-20°C … +70°C

Table 5.4: Specifications of the BCL 308*i* line/raster scanners with heating

5.2.2 Oscillating-mirror scanner with heating

Technical data same as for line scanner without heating with the following differences:

Type	**BCL 308*i*** EtherNet
Type	**Oscillating-mirror scanner with heating**
Optical data	
Useful opening angle	max. 60°
Max. swivel angle	± 20°(adjustable)

Table 5.5: Specifications of the BCL 308*i* oscillating-mirror scanners with heating

Type	BCL 308*i* EtherNet
Type	**Oscillating-mirror scanner with heating**
Electrical data	
Operating voltage	24 V DC ±20%
Power consumption	max. 26.7 W
Structure of the heating	Housing heating and separate heating of the optics glass
Warmup time	Min. 30 min at +24 V DC and an ambient temperature of -35°C
Min. conductor cross section	Conductor cross section of at least 0.75 mm² for the supply voltage supply line. Wiring through of the voltage supply to multiple heating devices is **not** permissible. Standard, M12 ready-made cable **not** usable (insufficient cable cross-section)
Environmental data	
Operating temperature range	-35°C … +40°C
Storage temperature range	-20°C … +70°C

Table 5.5: Specifications of the BCL 308*i* oscillating-mirror scanners with heating

5.2.3 Line scanner / raster scanner with deflection mirror and heating

Technical data same as for line scanner without heating with the following differences:

Type	BCL 308*i* EtherNet
Type	**Deflection mirror scanner with heating**
Optical data	
Useful opening angle	max. 60°
Max. adjustment range	±10°(adjustable via display or software)
Electrical data	
Operating voltage	24 V DC ±20%
Power consumption	max. 19.7 W
Structure of the heating	Housing heating and separate heating of the optics glass
Warmup time	Min. 30 min at +24 V DC and an ambient temperature of -35°C
Min. conductor cross section	Conductor cross section of at least 0.75 mm² for the supply voltage supply line. Wiring through of the voltage supply to multiple heating devices is **not** permissible. Standard, M12 ready-made cable **not** usable (insufficient cable cross-section)
Environmental data	
Operating temperature range	-35°C … +40°C
Storage temperature range	-20°C … +70°C

Table 5.6: Specifications of the BCL 308*i* deflection mirror scanners with heating

ПРОМЭЛЕКТРОНИКА / sales@prom-elec.com

5.3 Dimensioned drawings

5.3.1 Dimensioned drawing of complete overview of the BCL 308*i* with MS 3xx / MK 3xx

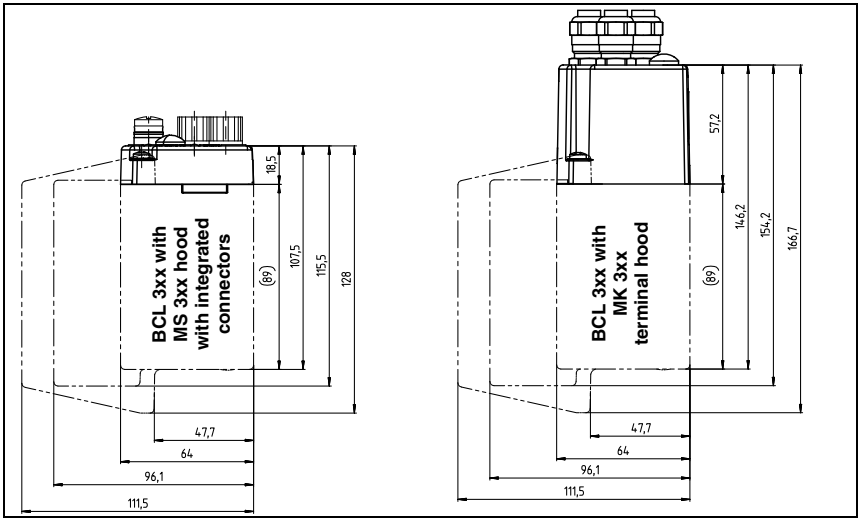

Figure 5.1: Dimensioned drawing of complete overview of the BCL 308*i* with MS 3xx / MK 3xx

5.3.2 Dimensioned drawing of line scanner with / without heating

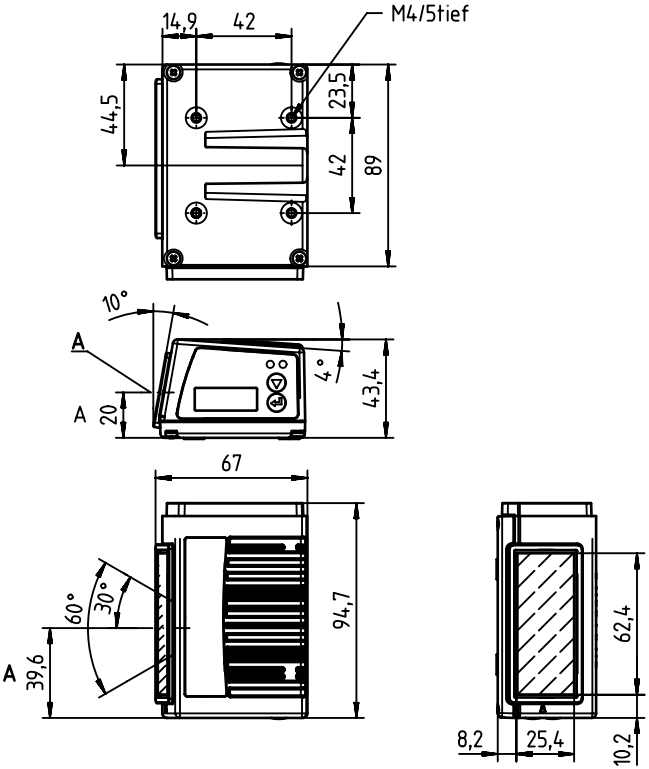

A Optical axis

Figure 5.2: Dimensioned drawing BCL 308*i* line scanner S…102

5.3.3 Dimensioned drawing of deflection mirror scanner with / without heating

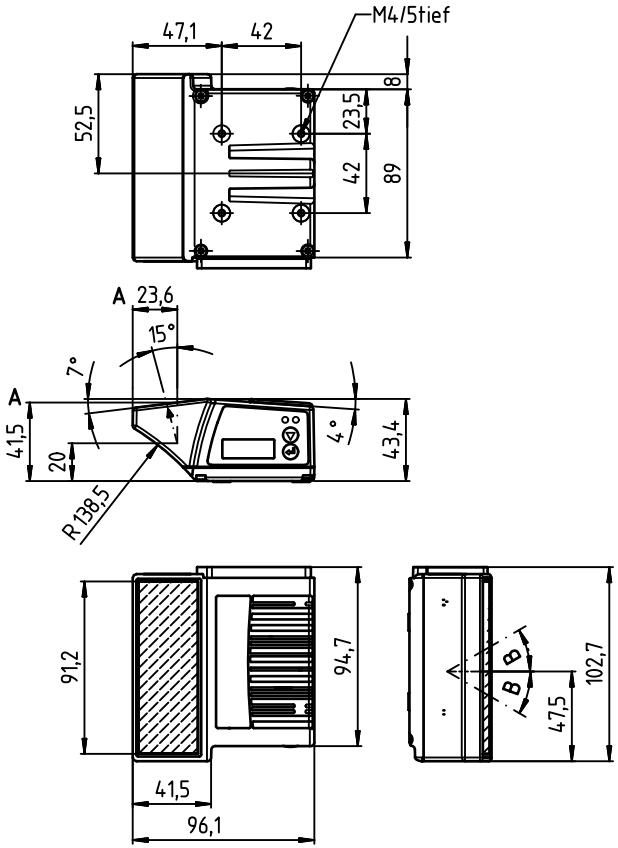

A Optical axis
B Deflection angle of the laser beam: ± 30°

Figure 5.3: Dimensioned drawing BCL 308*i* deflection mirror scanner S…100

5.3.4 Dimensioned drawing of oscillating-mirror scanner with / without heating

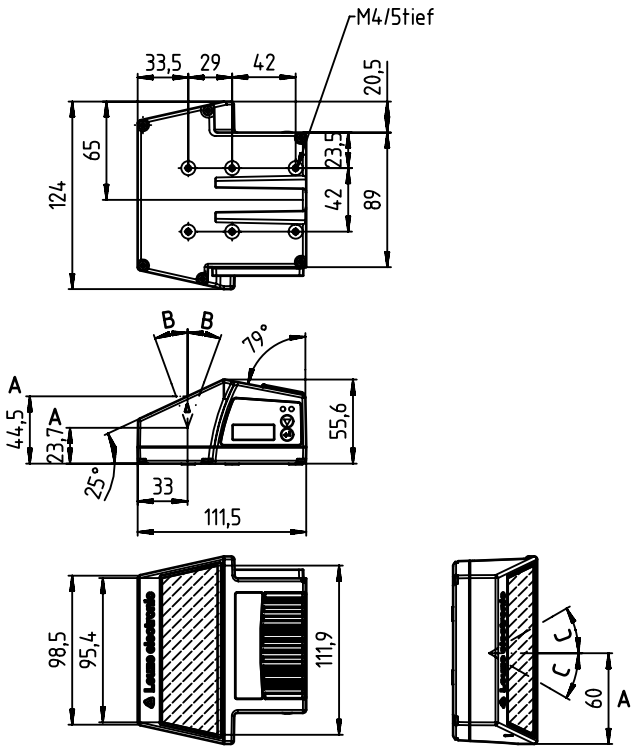

A Optical axis
B Swivel angle of the laser beam: ± 20°
C Deflection angle of the laser beam: ± 30°

Figure 5.4: Dimensioned drawing BCL 308*i* oscillating mirror scanner O…100

5.3.5 Dimensioned drawing of MS 3xx hood with integrated connectors / MK 3xx terminal hood

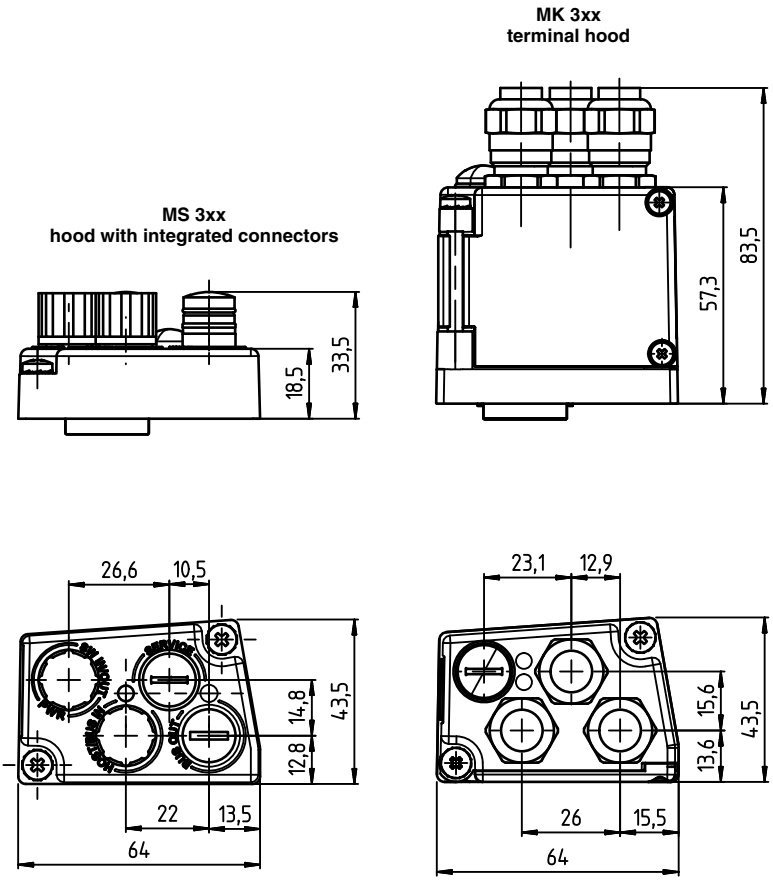

Attention!

To ensure protection class IP 65 is fulfilled, the screws of the connection hood are tightened with a tightening torque of 1.4Nm for connecting to the BCL.

Figure 5.5: Dimensioned drawing of MS 3xx hood with integrated connectors / MK 3xx terminal hood

5.4 Reading field curves / optical data

5.4.1 Bar code characteristics

Notice!

Please note that the size of the bar code module influences the maximum reading distance and the width of the reading field. Therefore, when selecting a mounting location and/or the bar code label, take into account the different reading characteristics of the scanner with various bar code modules.

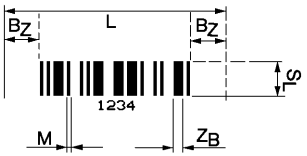

M = Module: The narrowest line or space of a bar code in mm.

Z_B = Wide character: Wide bars and gaps are a multiple (ratio) of the module.
Module x Ratio = Z_B (Normal Ratio 1 : 2.5).

B_Z = Quiet zone: The quiet zone should be at least 10 times the module, but not less than 2.5 mm.

L = Code length: The length of the bar code in mm including the start and stop characters. The quiet zone is included depending on the code definition.

S_L = Bar length: Height of the elements in mm.

Figure 5.6: The most important characteristics of a bar code

The range in which the bar code can be read by the BCL 308*i* (the so-called reading field) depends on the quality of the printed bar code and its dimensions.

Therefore, above all, the module of a bar code is decisive for the size of the reading field.

Notice!

A rule of thumb: The smaller the module of the bar code is, the smaller the maximum reading distance and reading field width will be.

5.4.2 Raster scanner

A raster variant is also available in the BCL 300*i* series. The BCL 300*i* as a raster scanner projects 8 scan lines which vary depending on the reading distance from the raster aperture.

		Distance [mm] starting at the zero position						
		50	100	200	300	400	450	700
Raster line cover [mm] all raster lines	Front scanner	**8**	**14**	**24**	**35**	**45**	**50**	**77**
	Deflection mirror scanner	**12**	**17**	**27**	**38**	**48**	**54**	**80**

Table 5.7: Raster line cover as a function of the distance

5.5 Reading field curves

Notice!

Please notice that the real reading fields are also influenced by factors such as labeling material, printing quality, reading angle, printing contrast etc., and may thus deviate from the reading fields specified here.

The reading field curves also apply for the variants with heating.

The zero position of the reading distance always refers the front edge of the housing of the beam exit and is shown in figure 5.7 for the three housing types of the BCL 308*i*.

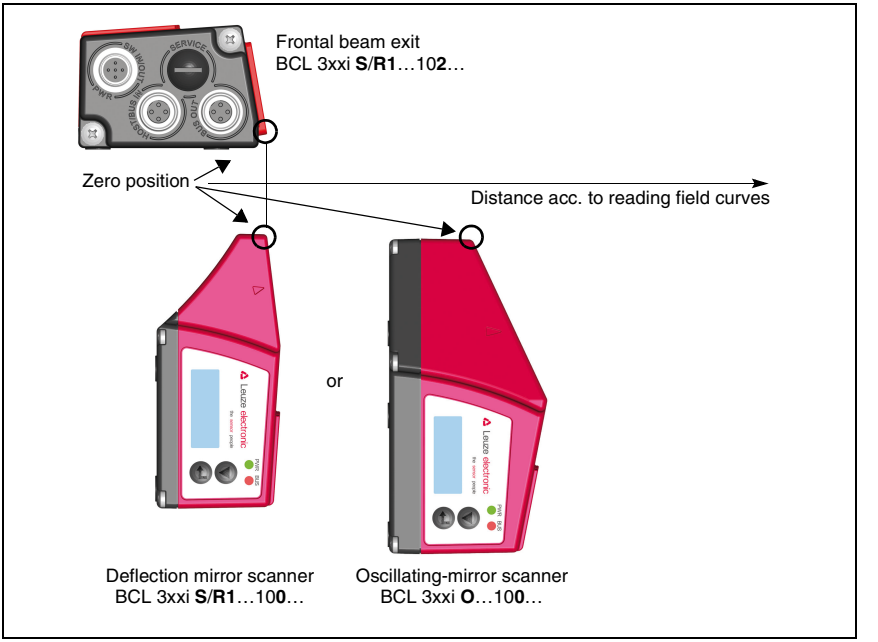

Figure 5.7: Zero position of the reading distance

Reading conditions for the reading field curves

Bar code type	2/5 Interleaved
Ratio	1:2.5
ANSI specification	class A
Reading rate	> 75%

Table 5.8: Reading conditions

5.5.1 High Density (N) - optics: BCL 308*i* S/R1 N 102 (H)

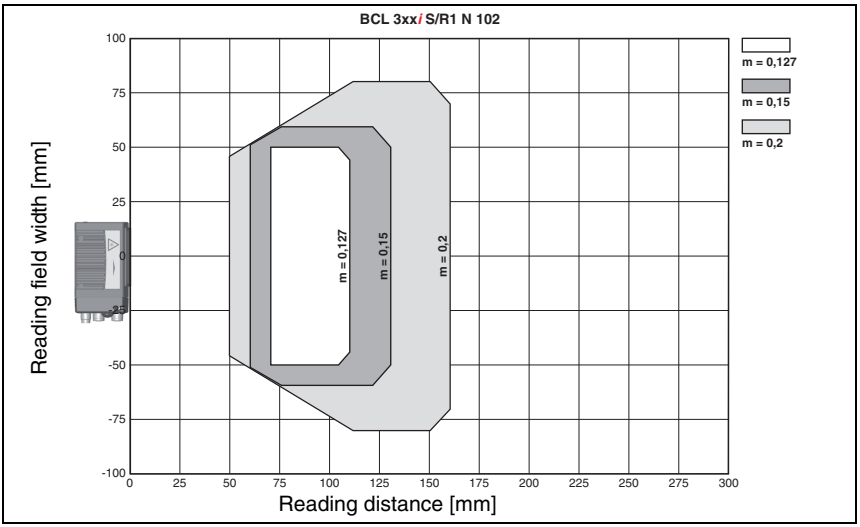

Figure 5.8: "High Density" reading field curve for line scanner without deflection mirror

5.5.2 High Density (N) - optics: BCL 308*i* S/R1 N 100 (H)

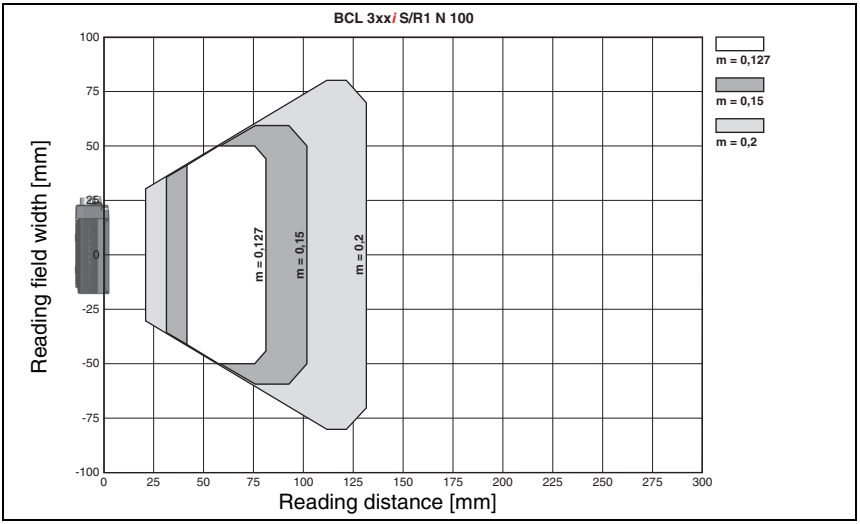

Figure 5.9: "High Density" reading field curve for line scanner with deflection mirror

The reading field curve applies for the reading conditions stated in table 5.8.

5.5.3 High Density (N) - optics: BCL 308*i* ON 100 (H)

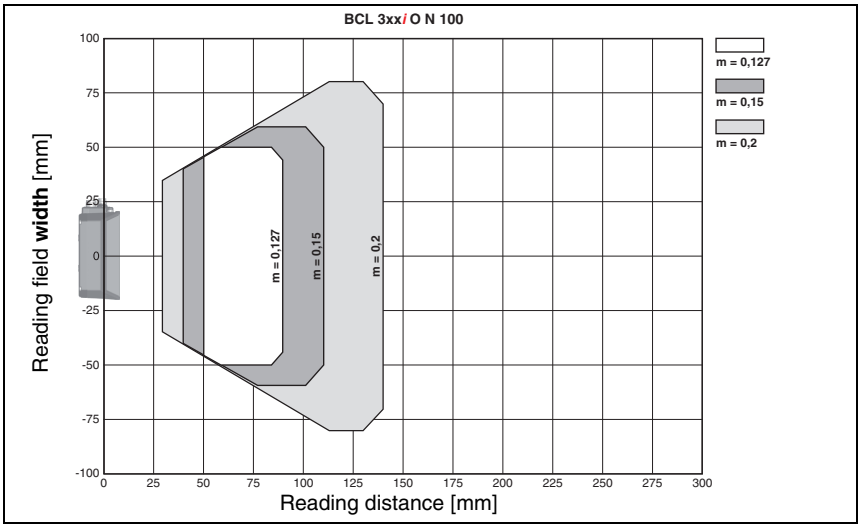

Figure 5.10: "High Density" reading field curve for oscillating-mirror scanners

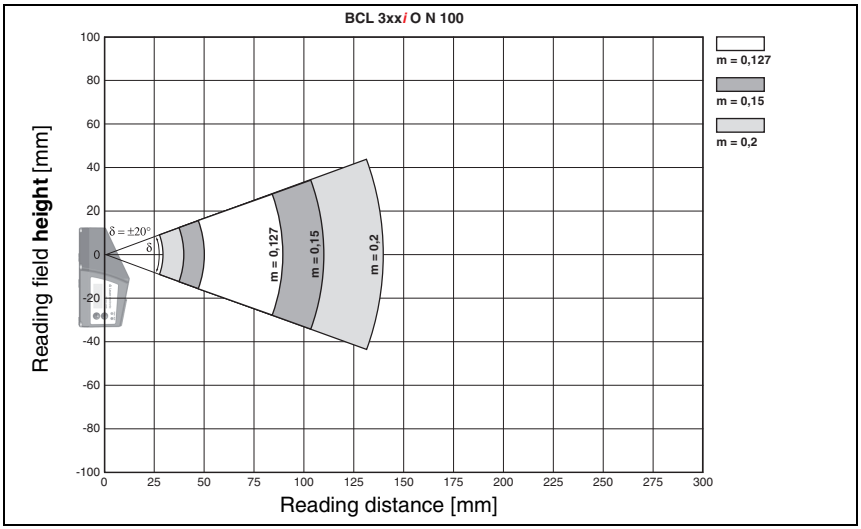

Figure 5.11: Lateral "High Density" reading field curve for oscillating-mirror scanners

The reading field curves apply for the reading conditions stated in table 5.8.

5.5.4 Medium Density (M) - optics: BCL 308*i* S/R1 M 102 (H)

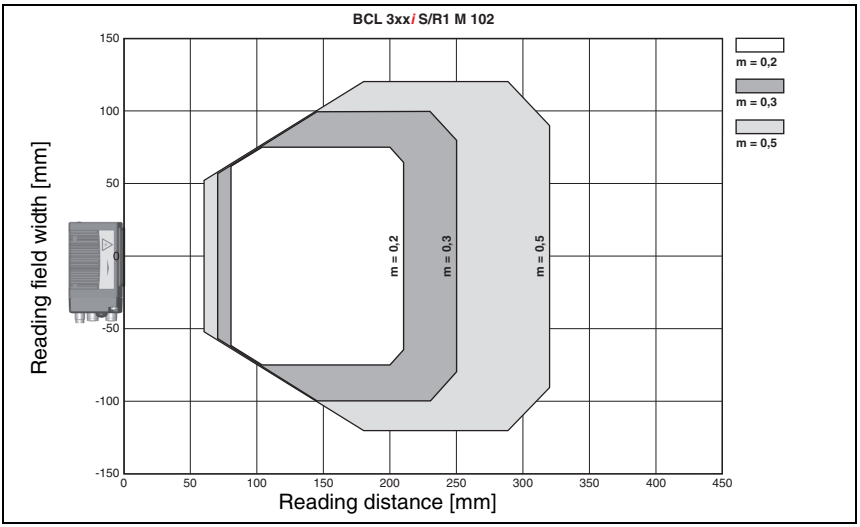

Figure 5.12: "Medium Density" reading field curve for line scanner without deflection mirror

5.5.5 Medium Density (M) - optics: BCL 308*i* S/R1 M 100 (H)

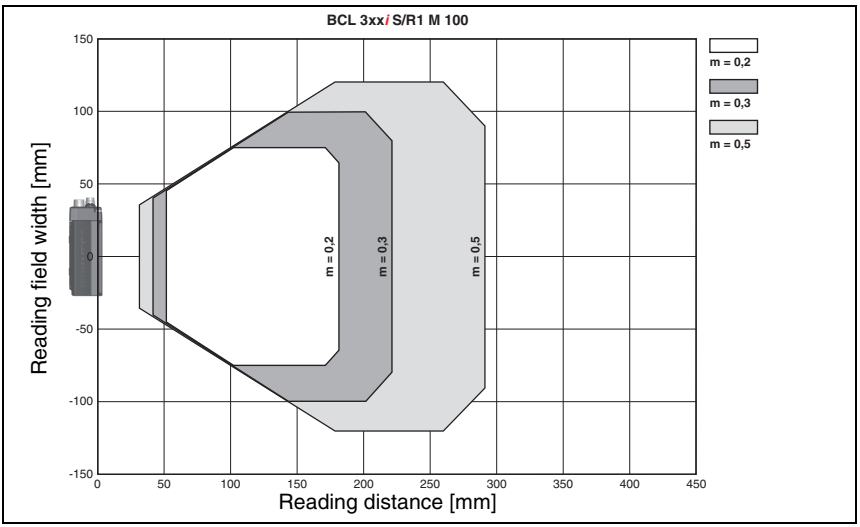

Figure 5.13: "Medium Density" reading field curve for line scanner with deflection mirror

The reading field curves apply for the reading conditions stated in table 5.8.

5.5.6 Medium Density (M) - optics: BCL 308*i* OM 100 (H)

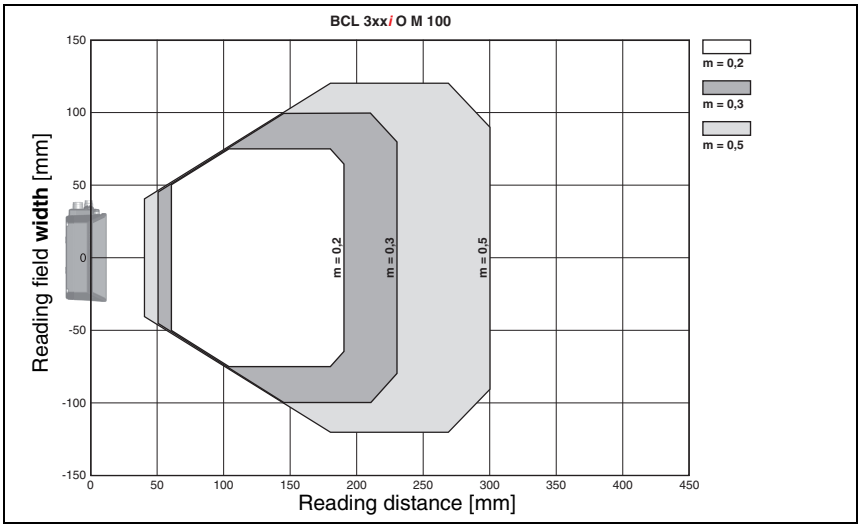

Figure 5.14: "Medium Density" reading field curve for oscillating-mirror scanners

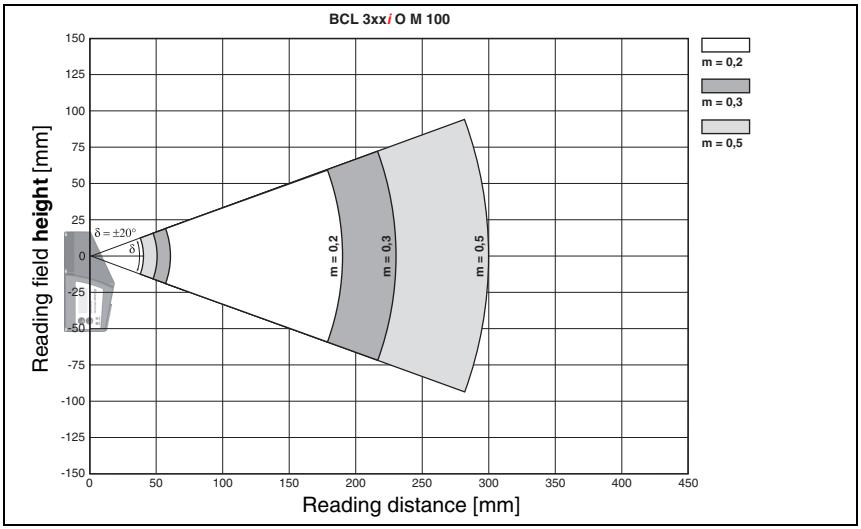

Figure 5.15: Lateral "Medium Density" reading field curve for oscillating-mirror scanners

The reading field curves apply for the reading conditions stated in table 5.8.

5.5.7 Low Density (F) - optics: BCL 308*i* S/R1 F 102 (H)

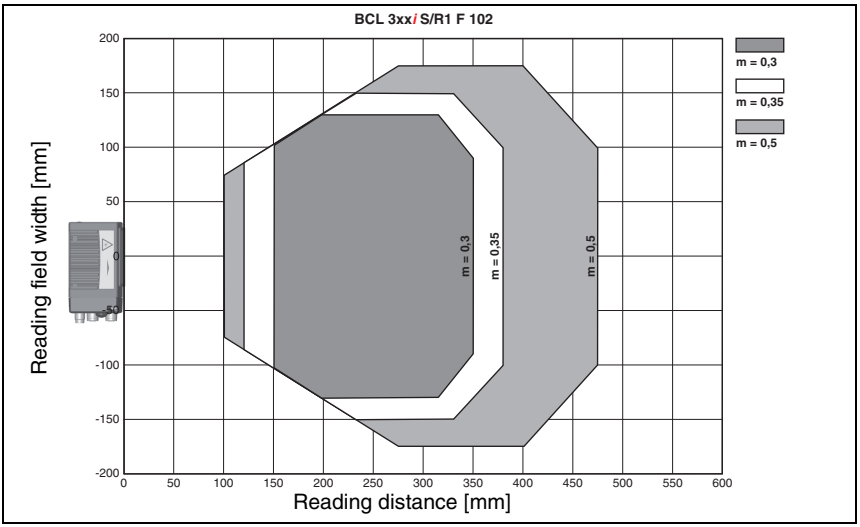

Figure 5.16: "Low Density" reading field curve for line scanner without deflection mirror

5.5.8 Low Density (F) - optics: BCL 308*i* S/R1 F 100 (H)

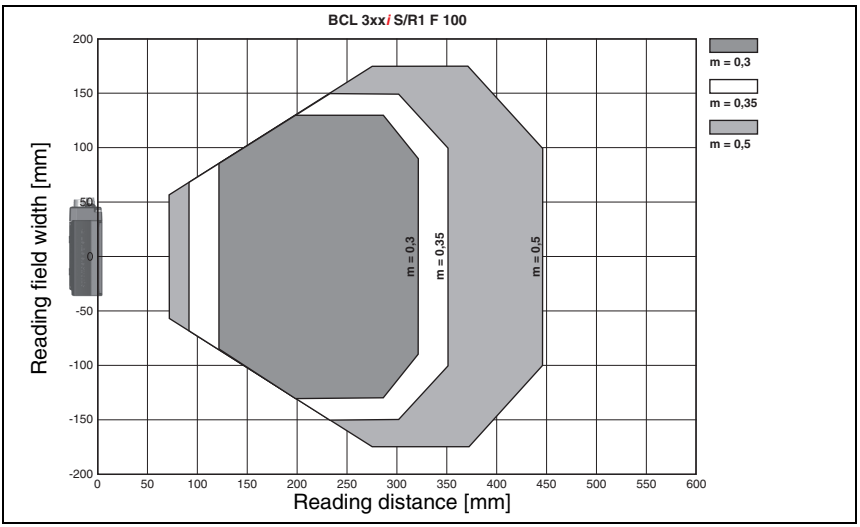

Figure 5.17: "Low Density" reading field curve for line scanner with deflection mirror

The reading field curves apply for the reading conditions stated in table 5.8.

5.5.9 Low Density (F) - optics: BCL 308*i* OF 100 (H)

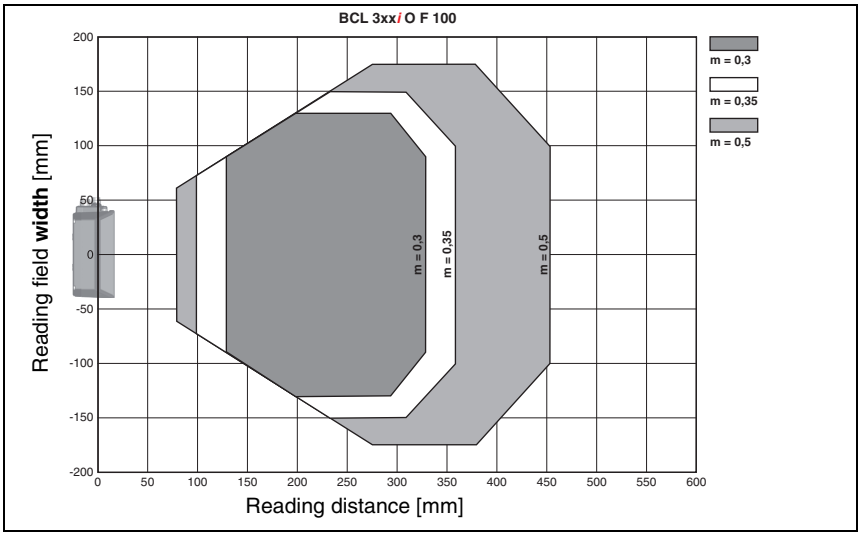

Figure 5.18: "Low Density" reading field curve for oscillating-mirror scanners

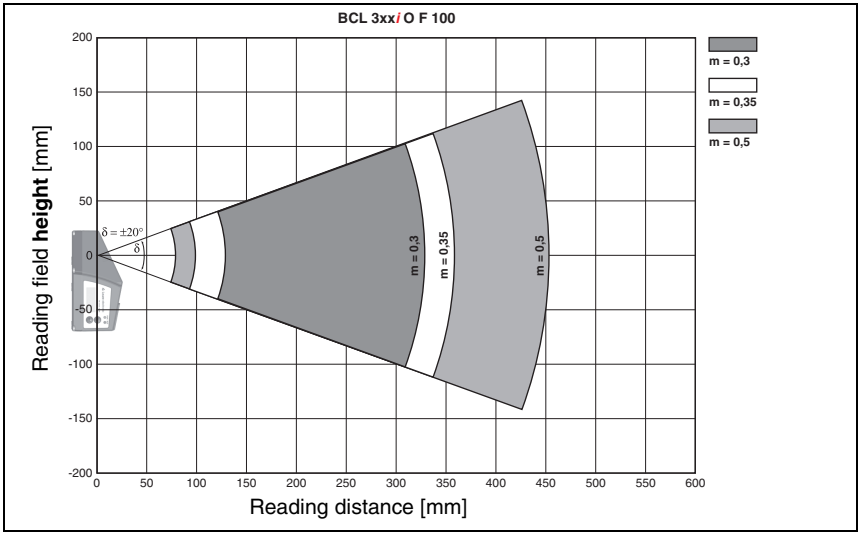

Figure 5.19: Lateral "Low Density" reading field curve for oscillating-mirror scanners

The reading field curves apply for the reading conditions stated in table 5.8.

5.5.10 Ultra Low Density (L) - optics: BCL 308*i* S/R1 L 102 (H)

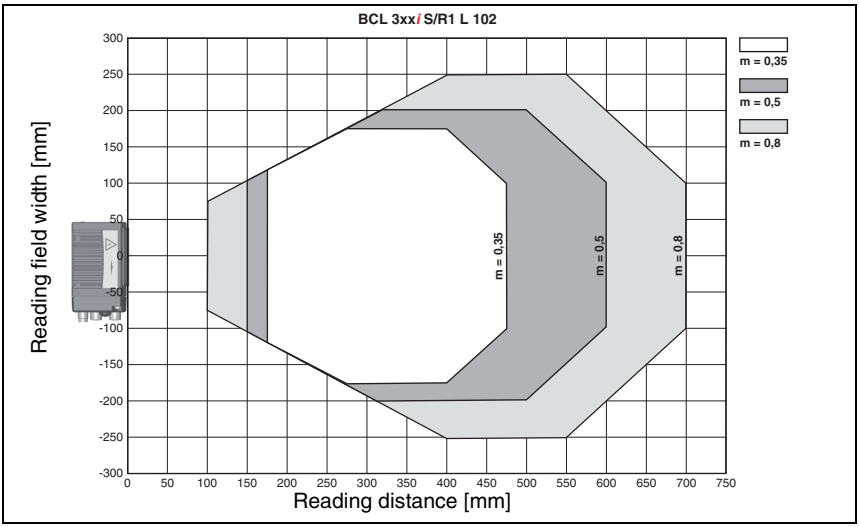

Figure 5.20: "Ultra Low Density" reading field curve for line scanner without deflection mirror

5.5.11 Ultra Low Density (L) - optics: BCL 308*i* S/R1 L 100 (H)

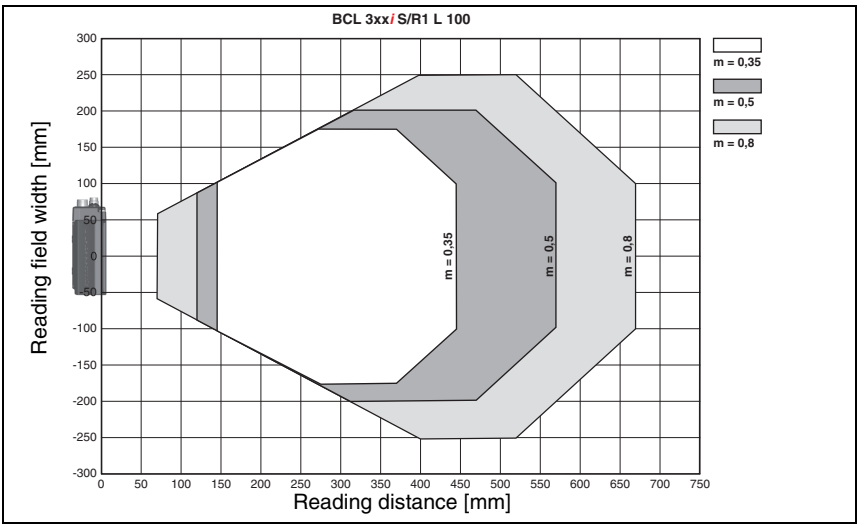

Figure 5.21: "Ultra Low Density" reading field curve for line scanner with deflection mirror

The reading field curves apply for the reading conditions stated in table 5.8.

5.5.12 Ultra Low Density (L) - optics: BCL 308*i* OL 100 (H)

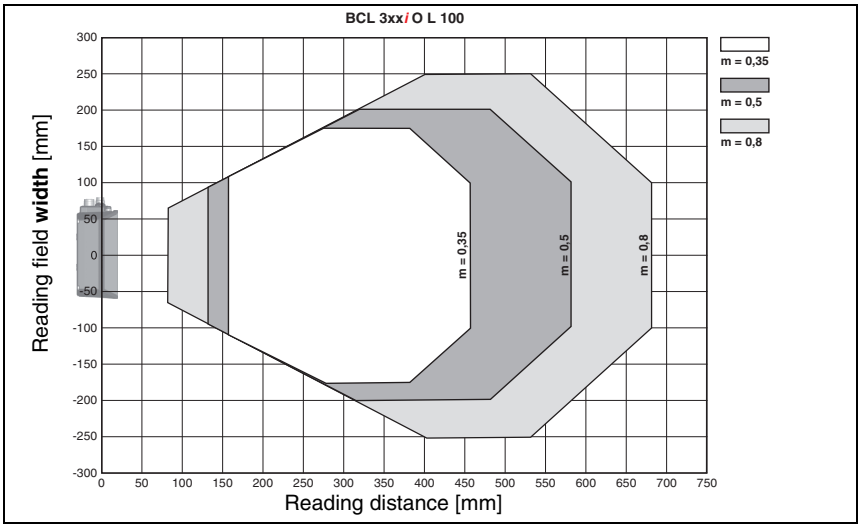

Figure 5.22: "Ultra Low Density" reading field curve for oscillating-mirror scanners

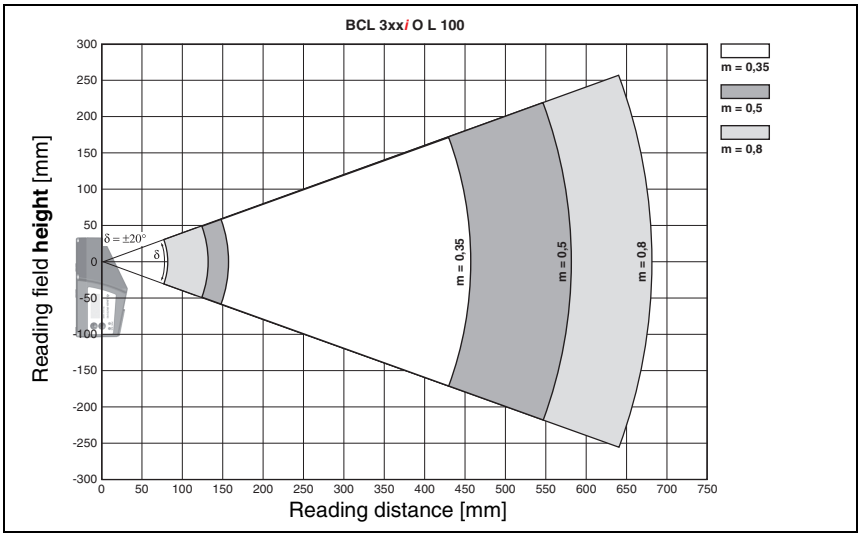

Figure 5.23: Lateral "Ultra Low Density" reading field curve for oscillating-mirror scanners

The reading field curves apply for the reading conditions stated in table 5.8.

6 Installation and mounting

6.1 Storage, transportation

Attention!

When transporting or storing, package the device so that it is protected against collision and humidity. Optimum protection is achieved when using the original packaging. Heed the required environmental conditions specified in the technical data.

Unpacking

- *Check the packaging for any damage. If damage is found, notify the post office or shipping agent as well as the supplier.*
- *Check the delivery contents using your order and the delivery papers:*
  - Delivered quantity
  - Device type and model as indicated on the name plate
  - Laser warning signs
  - Brief manual

The name plate provides information as to what BCL type your device is. For specific information, please refer to chapter 5.

Name plates of the bar code readers of the BCL 308i series

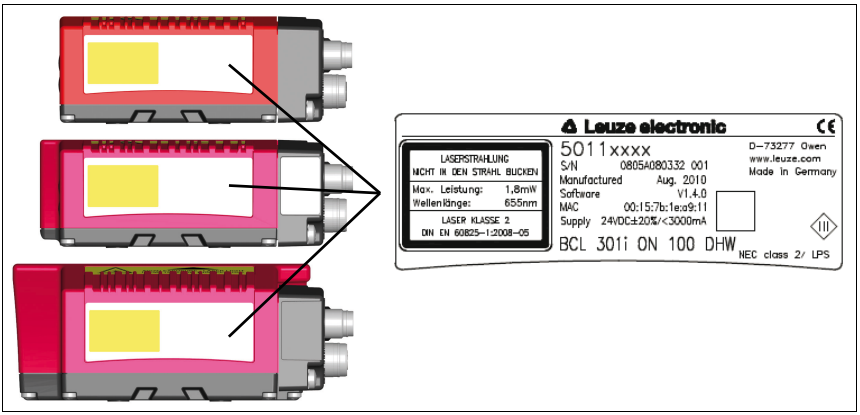

Figure 6.1: Device name plate BCL 308*i*

- *Save the original packaging for later storage or shipping.*

Notice!

All BCL 308i are delivered with a protective cover on the connection side which must be removed before attaching a connection hood.

If you have any questions concerning your shipment, please contact your supplier or your local Leuze electronic sales office.

↳ *Observe the applicable local regulations when disposing of the packaging materials.*

6.2 Mounting the BCL 308*i*

The BCL 308*i* bar code readers can be mounted in two different ways:

- Via four or six M4x5 screws on the bottom of the device.
- Via a BT 56 mounting device in the two fastening grooves on the bottom of the device.

Attention!

The BCL 300i does not fulfill protection class IP 65 until the connection hood has been screwed on. Minimum tightening torque of the housing connection screws on the connection hood 1.4 Nm!

6.2.1 Fastening with M4 x 5 screws

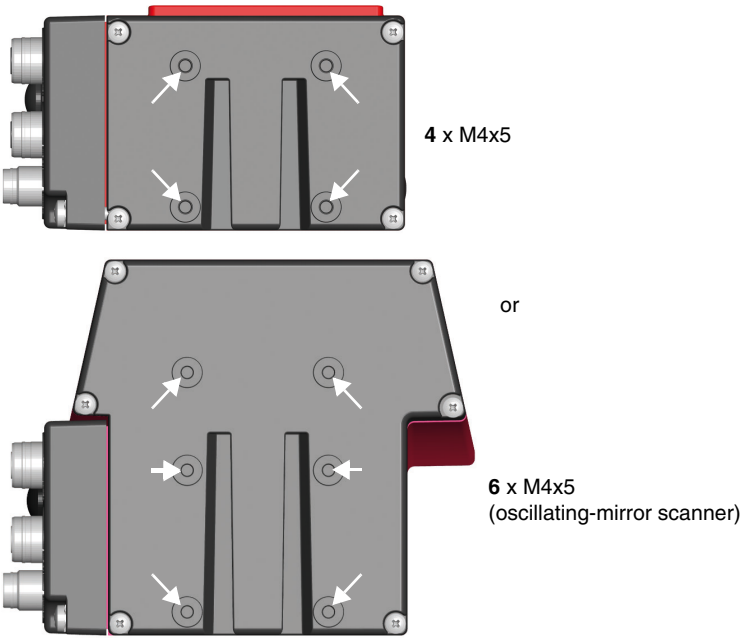

Figure 6.2: Fastening options using M4x5 threaded holes

6.2.2 BT 56 mounting device

The BT 56 mounting device is available for mounting the BCL 308*i* using the fastening grooves. It is designed for rod mounting (Ø 16mm to 20mm). For ordering instructions, please refer to chapter "Type overview and accessories" on page 136.

BT 56 mounting device

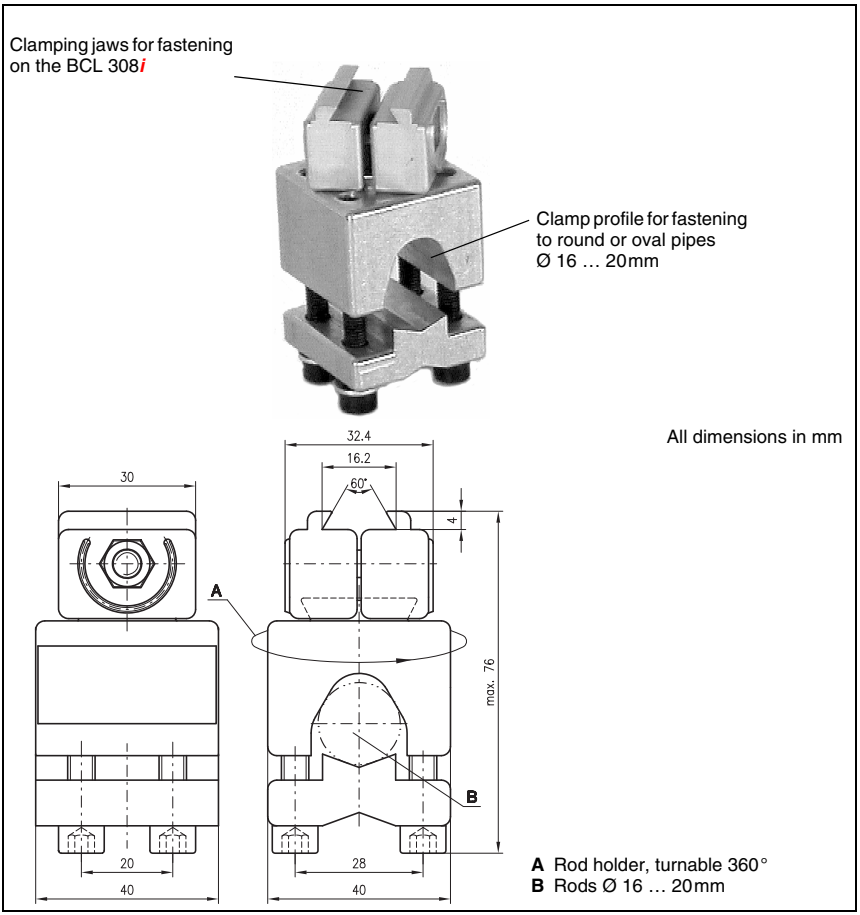

Figure 6.3: BT 56 mounting device

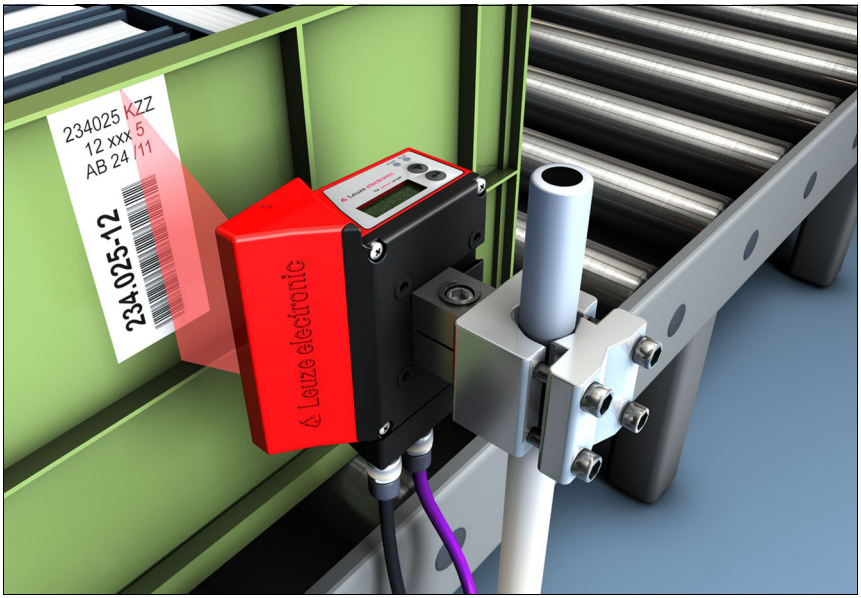

Figure 6.4: Mounting example of BCL 308*i* with BT 56

6.2.3 BT 59 mounting device

The BT 59 mounting device offers you an additional fastening option. For ordering instructions, please refer to chapter "Type overview and accessories" on page 136.

BT 59 mounting device

Clamping jaws for fastening on the BCL 308*i*

All dimensions in mm

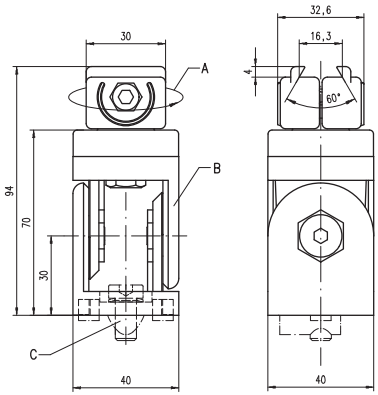

A Holder, turnable 360°
B ITEM joint, angle adjustable ±90°
C M 8x16 screw cylinder, M 8 wave washer, M 8 sliding block, connectors for ITEM profile (2x)

Figure 6.5: BT 59 mounting device

Notice!

When mounting, ensure that the scanning beam is not reflected directly back to the scanner by the label which is being read. For further information, see the notices in chapter 6.3! Please refer to chapter 5.4 for the permissible minimum and maximum distances between the BCL 308i and the labels to be read.

6.3 Device arrangement

6.3.1 Selecting a mounting location

In order to select the right mounting location, several factors must be considered:

- Size, orientation, and position tolerance of the bar codes on the objects to be scanned.
- The reading field of the BCL 308*i* in relation to the bar code module width.
- The resulting minimum and maximum reading distance from the respective reading field (see chapter 5.4 "Reading field curves / optical data").
- The permissible cable lengths between the BCL 308*i* and the host system depending on which interface is used.
- The correct time for data output. The BCL 308*i* should be positioned in such a way that, taking into consideration the time required for data processing and the conveyor belt speed, there is sufficient time to e.g. initiate sorting operations on the basis of the read data.
- The display elements such as LEDs or the display should be highly visible.
- For configuring and commissioning with the webConfig tool, the USB interface should be easily accessible.

For specific information, please refer to chapter 6 and chapter 7.

Notice!

The beam of the BCL 308i exits:

- **parallel** to the **housing base** in the case of the line scanner
- at **105 degrees** from the **housing base** in the case of the deflection mirror
- **perpendicular** to the **housing base** in the case of the oscillating mirror

In each case, the housing base is the black area in figure 6.2. The best read results are obtained when:

- *The BCL 308i is mounted in such a way that the scanning beam is incident on the bar code at an angle of inclination greater than ±10° … 15° to vertical.*
- *The reading distance lies in the middle area of the reading field.*
- *The bar code labels are of good print quality and have good contrast ratios.*
- *You do not use high-gloss labels.*
- *There is no direct sunlight.*

6.3.2 Avoiding total reflection – Line scanner

The bar code label must be positioned at an angle of inclination greater than ±10° … 15° from vertical in order to avoid total reflection of the laser beam (see figure 6.6)!

Total reflection occurs whenever the laser light of the bar code reader is directly incident on the surface of the bar code at an angle of 90°. The light directly reflected by the bar code may overload the bar code reader and thereby cause non-readings!

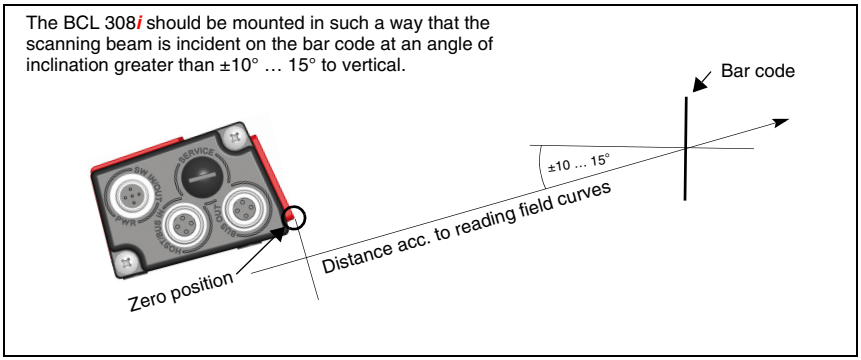

Figure 6.6: Total reflection – line scanner

6.3.3 Avoiding total reflection – deflection mirror scanner

For the BCL 308*i* with **deflection mirror**, the laser beam exits at an angle of 105° to the rear housing wall.

An angle of incidence of 15° of the laser to the label has already been integrated in the deflection mirror so that the BCL 308*i* can be installed parallel to the bar code (rear housing wall).

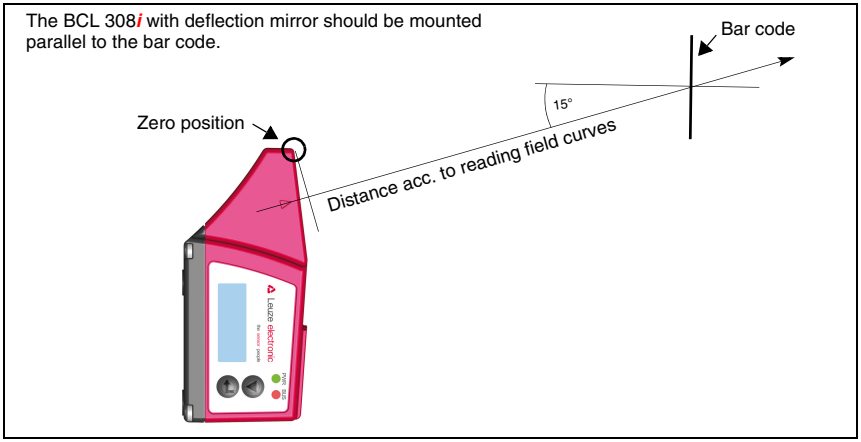

Figure 6.7: Total reflection – line scanner

6.3.4 Avoiding total reflection – oscillating-mirror scanner

For the BCL 308*i* with **oscillating mirror**, the laser beam exits at an angle of **90° to vertical**.

For the BCL 308*i* with **oscillating mirror**, the **swivel range of ±20°** (±12° for devices with heating) **is to be taken into account**.

This means that in order to be on the safe side and to avoid total reflection, the BCL 308*i* with oscillating mirror must be inclined upward or downward 20° … 30°!

Notice!

Mount the BCL 308i with oscillating mirror in such a way that the outlet window of the bar code reader is parallel to the object. This will result in an angle of inclination of approx. 25°.

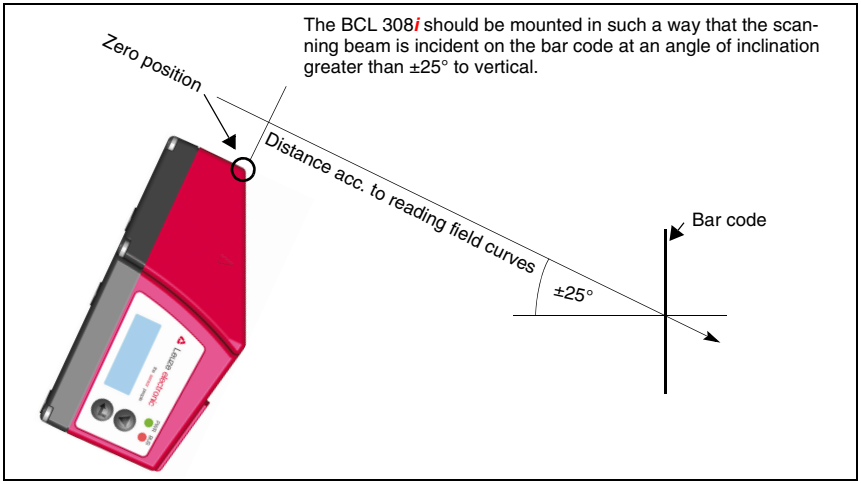

Figure 6.8: Total reflection – BCL 308*i* with oscillating mirror

6.3.5 Mounting location

When selecting a mounting location, pay attention to:

- *Maintaining the required environmental conditions (temperature, humidity).*
- *Possible soiling of the reading window due to liquids, abrasion by boxes, or packaging material residues.*
- *Lowest possible chance of damage to the BCL 308i by mechanical collision or jammed parts.*
- *Possible extraneous light (no direct sunlight or sunlight reflected by the bar code).*

6.3.6 Devices with integrated heating

For devices with integrated heating, also observe the following points:

- Mount the BCL 308*i* in a way which provides maximum thermal isolation, e.g. using rubber-bonded metal.
- Mount in such a way that the device is protected from draft and wind; mount additional shields if necessary.

Notice!

When installing the BCL 308i in a protective housing, it must be ensured that the scanning beam can exit the protective housing without obstruction.

6.3.7 Possible reading angles between BCL 308*i* and bar code.

The optimum alignment of the BCL 308*i* is accomplished when the scan line scans the code bars almost at a right angle (90°). All reading angles that are possible between the scan line and bar code must be taken account (figure 6.9).

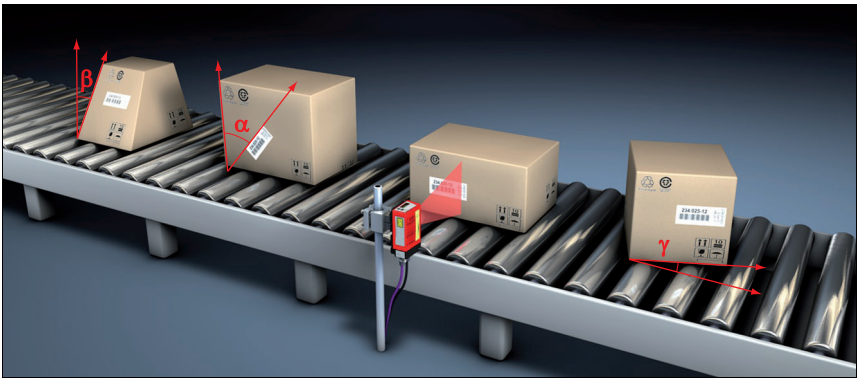

Figure 6.9: Reading angle for the line scanner

α Tilt

β Angle of inclination (Pitch)

γ Skew

In order to avoid total reflection, the skew γ should be greater than 10°.

6.4 Cleaning

↳ *Clean the glass pane of the BCL 308i with a soft cloth after mounting. Remove all packaging remains, e.g. carton fibers or Styrofoam balls. In doing so, avoid leaving fingerprints on the front cover of the BCL 308i.*

Attention!

Do not use aggressive cleaning agents such as thinner or acetone for cleaning the device.

7 Electrical connection

The bar code readers in the BCL 300*i* series feature a modular connection concept with interchangeable connection hoods.

The additional Mini-B type USB interface is used for configuring the device.

Notice!

On delivery, the products are provided with a plastic protective cap on the side of the system plug or the system socket.

Additional connection accessories can be found in chapter 13.

Attention!

The BCL 308i does not fulfill protection class IP 65 until the connection hood has been screwed on. Minimum tightening torque of the housing connection screws on the connection hood 1.4 Nm!

Location of the electrical connections

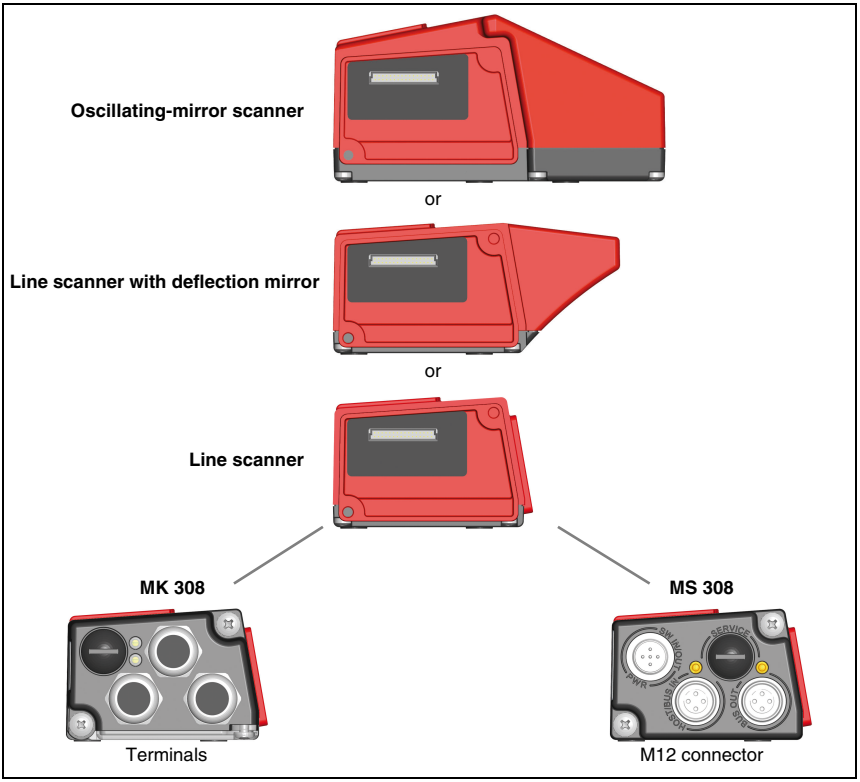

Figure 7.1: Location of the electrical connections

7.1 Safety notices for the electrical connection

Attention!

Do not open the device yourself under any circumstances! There is otherwise a risk of uncontrolled emission of laser radiation from the device. The housing of the BCL 308i contains no parts that need to be adjusted or maintained by the user.

Before connecting the device, be sure that the supply voltage agrees with the value printed on the name plate.

Connection of the device and cleaning must only be carried out by a qualified electrician.

Ensure that the functional earth (FE) is connected correctly. Unimpaired operation is only guaranteed when the functional earth is connected properly.

If faults cannot be corrected, the device should be removed from operation and protected against possible commissioning.

Attention!

For UL applications, use is permitted exclusively in Class 2 circuits according to NEC (National Electric Code).

The bar code readers of the BCL 300i series are designed in accordance with safety class III for supply by PELV (protective extra-low voltage).

Notice!

Protection class IP 65 is not fulfilled until connectors or cable lead-throughs are screwed on and caps are installed!

Attention!

To ensure protection class IP 65 is fulfilled, the screws of the connection hood are tightened with a tightening torque of 1.4 Nm for connecting to the BCL.

7.2 Electrical connectionBCL 308*i*

For the electrical connection of the BCL 308*i*, 2 connection variants are available.

The **voltage supply** (18 … 30 VDC) is connected acc. to the connection type selected.

2 freely programmable switching inputs/outputs for individual adaptation to the respective application are also available here. Detailed information on this topic can be found in chapter 7.3.1.

7.2.1 MS 308 hood with 3 integrated M12 connectors

The MS 308 hood with integrated connectors features three M12 connector plugs and a Mini-B type USB socket as a service interface. Parameter memory is integrated into the MS 308 which temporarily stores the settings of the BCL 308*i* in the case of replacement and transmits them to a new device.

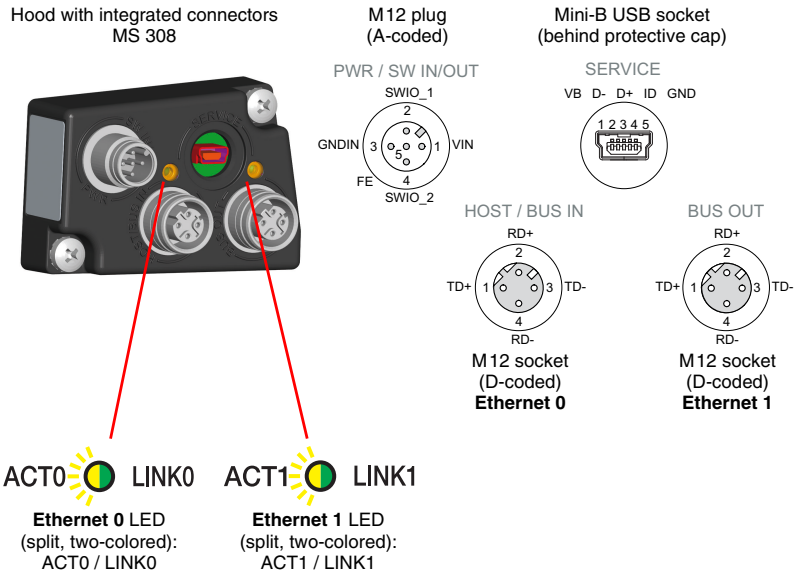

Figure 7.2: BCL 308*i* - MS 308 hood with integrated M12 connectors

Notice!

The shielding connection is done via the M12 connector housing.

Notice!

The integrated parameter memory for the simple replacement of the BCL 308i is located in the MS 308. In the integrated parameter memory, both the settings and the network address are saved and transmitted to a new device.

Notice!

In the case of Ethernet line topology, the network is interrupted when the BCL 308i is removed from the MS 308.

Notice!

See chapter 5.3.5 "Dimensioned drawing of MS 3xx hood with integrated connectors / MK 3xx terminal hood" dimensioned drawing on page 51.

7.2.2 MK 308 terminal hood with spring-loaded terminals

The MK 308 terminal hood makes it possible to connect the BCL 308*i* directly and without additional connectors. The MK 308 features three cable lead-throughs in which the shielding connection for the interface cable is also located. The BCL 308*i* is also to be configured when the MK 308 is in a closed state via a Mini-B type USB socket functioning as the service interface. Parameter memory is integrated into the MK 308 which temporarily stores the settings of the BCL 308*i* in the case of replacement and transmits them to a new device.

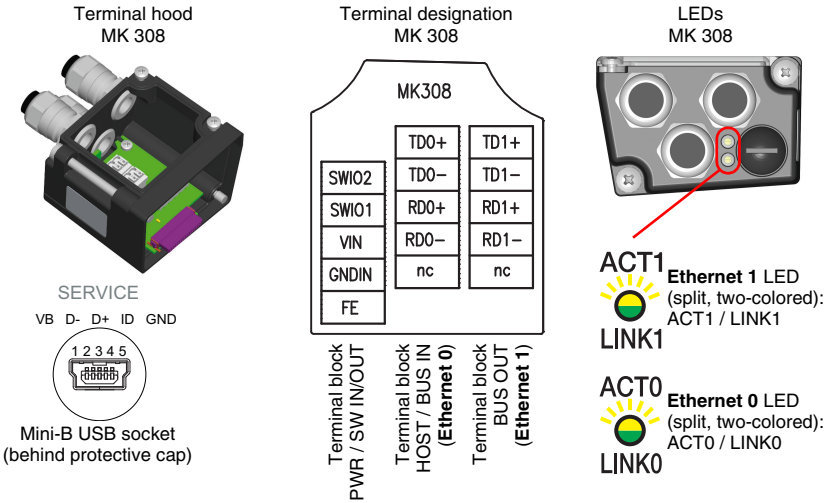

Figure 7.3: BCL 308*i* - MK 308 terminal hood with spring-loaded terminals

Notice!

The integrated parameter memory for simple exchange of the BCL 308i is located in the MK 308. In the integrated parameter memory, both the settings and the network address are saved and transmitted to a new device.

Notice!

In the case of Ethernet line topology, the network is interrupted when the BCL 308i is removed from the MK 308.

Cable fabrication and shielding connection

Remove approx. 78 mm of the connection cable sheathing. 15 mm of sheath of the shielded line must be freely accessible.

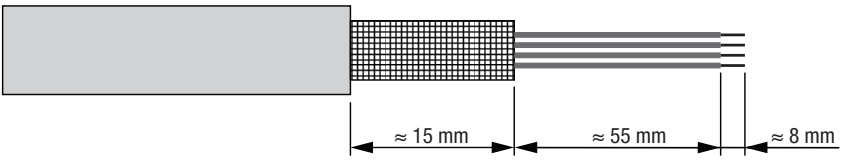

Figure 7.4: Cable fabrication for MK 308 terminal hood

The shield is automatically contacted when the cable is lead into the metal screw fitting and fastened when the cord grip is closed. Then lead the individual wires into the terminals according to the diagram. Wire end sleeves are not necessary.

Notice!

See chapter 5.4 "Reading field curves / optical data" dimensioned drawing on page 52.

7.3 Detailed description of the connections

Described in detail in the following are the individual connections and pin assignments.

7.3.1 PWR / SW IN/OUT - Voltage supply and switching input/outputs 1 and 2

PWR / SW IN/OUT			
MS 308 PWR / SW IN/OUT 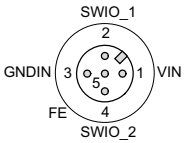 **M12 plug (A-coded)** **MK 308** 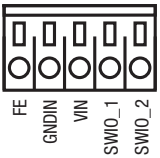 **Spring-loaded terminals**	**Pin (M12)**	**Name (terminal)**	**Remark**
	1	VIN	Positive supply voltage +18 … +30VDC
	2	SWIO_1	Configurable switching input / output 1
	3	GNDIN	Negative supply voltage 0VDC
	4	SWIO_2	Configurable switching input / output 2
	5	FE	Functional earth
	Thread	FE	Functional earth (housing)

Table 7.1: Pin assignment PWR / SW IN/OUT

Supply voltage

Attention!

For UL applications, use is permitted exclusively in Class 2 circuits according to NEC (National Electric Code).

The bar code readers of the BCL 300i … series are designed in accordance with safety class III for supply by PELV (protective extra-low voltage).

Connecting functional earth FE

- *Ensure that the functional earth (FE) is connected correctly. Unimpaired operation is only guaranteed when the functional earth is connected properly. All electrical disturbances (EMC couplings) are discharged via the functional earth connection.*

Switching input / output

The bar code readers of the BCL 300*i* series are equipped with two freely programmable, opto-decoupled switching inputs and outputs, **SWIO_1** and **SWIO_2**.

The switching inputs can be used to activate various internal functions of the BCL 308*i* (decoding, autoConfig, …). The switching outputs can be used to signal the state of the BCL 308*i* and to implement external functions independent of the superior control.

Notice!

The respective function as input or output can be set with the aid of the webConfig configuration tool!

Described in the following is the external wiring for use as a switching input or output; the respective function assignments to the switching inputs/outputs can be found in chapter 10.

Function as switching input

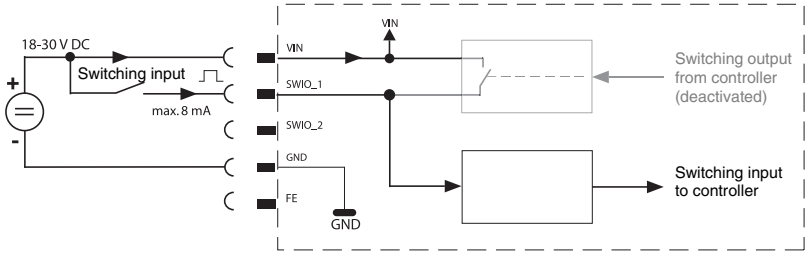

Figure 7.1: Switching input connection diagram SWIO_1 and SWIO_2

↳ *If you use a sensor with a standard M12 connector, please note the following:*

- Pins 2 and 4 must not be operated as switching outputs if sensors which function as inputs are also connected to these pins.

If, for example, the inverted sensor output is connected to pin 2, and pin 2 of the bar code reader is, at the same time, configured as an output (and not as an input), the switching output malfunctions.

Attention!

The maximum input current must not exceed 8 mA!

Function as switching output

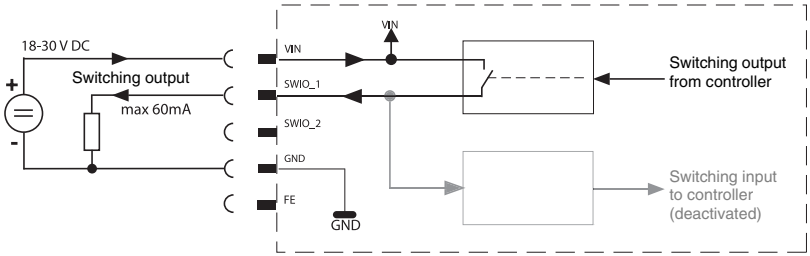

Figure 7.2: Switching output connection diagram SWIO_1 / SWIO_2

Attention!

Each configured switching output is short-circuit proof! Do not load the respective switching output of the BCL 308i with more than 60 mA at +18 … +30 VDC in normal operation!

Notice!

Both switching inputs/outputs SWIO_1 and SWIO_2 are configured by default in such a way that:

- Switching input SWIO_1 activates the reading gate.
- Switching output SWIO_2 switches by default on "No Read."

7.3.2 SERVICE – USB interface (Mini-B type)

SERVICE – USB interface (Mini-B type)			
SERVICE VB D- D+ ID GND 1 2 3 4 5	**Pin (USB Mini-B)**	**Name**	**Remark**
	1	VB	Sense input
	2	D-	Data -
	3	D+	Data +
	4	ID	Not connected
	5	GND	Ground

Table 7.2: Pin assignment SERVICE – Mini-B type USB interface

Ensure adequate shielding.

The entire connection cable must absolutely be shielded acc. to the USB specifications. Cable length must not exceed 3 m.

*Use the Leuze specific **USB service cable** (See chapter 13 "Type overview and accessories") for the connection and use a service PC to configure.*

Notice!

IP 65 is achieved only if the connectors and caps are screwed into place.

7.3.3 HOST / BUS IN for BCL 308*i*

The BCL 308*i* makes either the Ethernet interface available as host interface.

HOST / BUS IN Ethernet_0 (4-pin socket, D-coded)			
MS 308 HOST / BUS IN 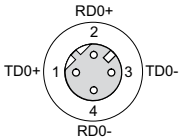 **M12 socket (D-coded)** **MK 308** 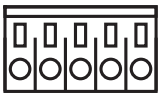 **Spring-loaded terminals**	**Pin (M12)**	**Name (terminal)**	**Remark**
	1	TD0+	Transmit Data +
	2	RD0+	Receive Data +
	3	TD0-	Transmit Data -
	4	RD0-	Receive Data -
	FE via thread	FE via screw fitting	Functional earth (housing)

Table 7.3: Pin assignment HOST / BUS IN BCL 308*i*

↳ *For the host connection of the BCL 308i, the "KB ET - … - SA-RJ45" ready-made cables are preferred, see table 13.9 "Bus connection cables for the BCL 308i" on page 141.*

Ethernet cable assignments

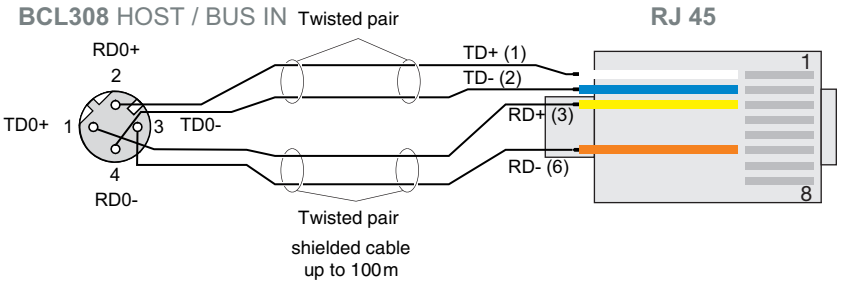

Figure 7.3: HOST / BUS IN cable assignments on RJ-45

Notice for connecting the Ethernet interface!

Ensure adequate shielding. The entire connection cable must be shielded and earthed. The RD+/RD- and TD+/TD- wires must be stranded in pairs.
Use CAT 5 cable for the connection.

7.3.4 BUS OUT for the BCL 308*i*

To set up an Ethernet network with other participants with linear topology, the BCL 308*i* makes available another Ethernet interface. The use of this interface drastically reduces the cabling requirements, as only the first BCL 308*i* requires a direct connection to the switch, via which it can communicate with the host. All other BCL 308*i* are connected in series to the first BCL 308*i*, see figure 7.5.

BUS OUT Ethernet_1 (4-pin socket, D-coded)			
MS 308 BUS OUT 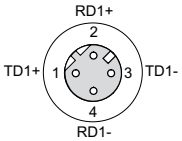 **M12 socket (D-coded)** **MK 308** 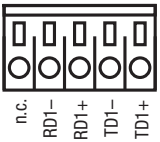 **Spring-loaded terminals**	**Pin (M12)**	**Name (terminal)**	**Remark**
	1	TD1+	Transmit Data +
	2	RD1+	Receive Data +
	3	TD1-	Transmit Data -
	4	RD1-	Receive Data -
	FE via thread	FE via screw fitting	Functional earth (housing)

Table 7.4: Pin assignment BUS OUTBCL 308*i*

For the connection of two BCL 308i, the "KB ET - … - SSA" ready-made cables are preferred, see table 13.9 "Bus connection cables for the BCL 308i" on page 141.

If you use user-configurable cables, note the following:

Notice!

Ensure adequate shielding. The entire connection cable must be shielded and earthed. The signal lines must be stranded in pairs.
Use CAT 5 cable for the connection.

Notice!

For the BCL 308i as standalone device or as the last participant in a linear topology, termination on the BUS OUT socket is not mandatory!

7.4 Ethernet topologies

The BCL 308*i* can be operated as a single device (stand-alone) in an Ethernet star topology with individual IP address.

The IP address can either be set permanently via the display or webConfig tool or assigned dynamically via a DHCP server.

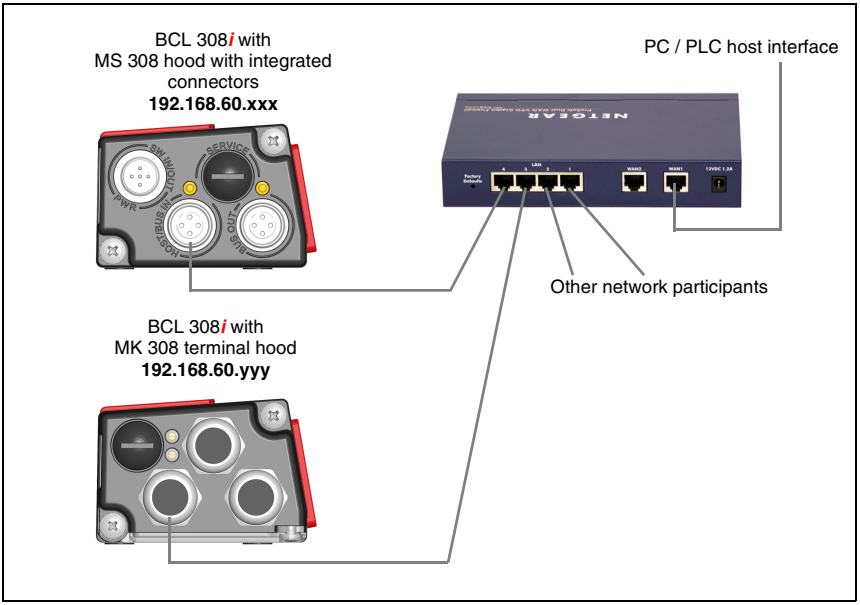

Figure 7.4: Ethernet with star topology

The innovative further development of the BCL 308*i* with integrated switch functionality offers the option of networking multiple bar code readers of type BCL 308*i* with one another. In addition to the classic "star topology", a "linear topology" is thus also possible.

This makes wiring the network easy and inexpensive as slaves are looped through to one another in parallel.

The maximum length of a segment (connection from the hub to the last participant) is limited to 100 m.

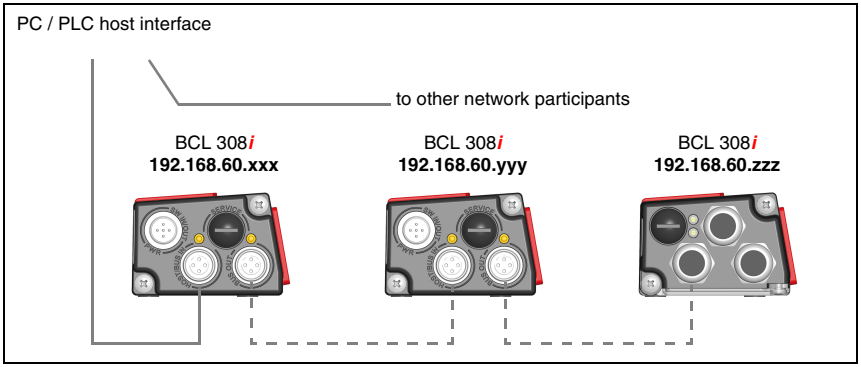

Figure 7.5: Ethernet with linear topology

Up to 254 bar code readers can be networked. For this purpose, each participating BCL 308*i* is assigned the respective network address via the webConfig Tool. This address must be specified by the network administrator. Alternatively, the BCL 308*i* can also be configured as a DHCP client and then automatically receive its address from a DHCP server.

Information on the necessary configuration steps can be found in chapter 10.

7.4.1 Ethernet wiring

A Cat. 5 Ethernet cable should be used for wiring.

For the connection on the BCL 308*i*, a "KDS ET M12 / RJ 45 W - 4P" adapter is available into which the standard network cable can be plugged.

If no standard network cables are to be used (e.g. due to lacking IP… protection class), you can use the "KB ET - … - SA" user-configurable cable on the BCL 308*i*, see table 13.9 "Bus connection cables for the BCL 308i" on page 141.

The individual BCL 308*i* devices in a linear topology are connected with the "KB ET - … - SSA" cable, see table 13.9 "Bus connection cables for the BCL 308i" on page 141.

For unavailable line lengths, you can configure your cables yourself. When doing so, make certain that you connect **TDx+** on the M12 connector with **RD+** on the RJ-45 connector and **TDx-** on the M12 connector with **RD-** on the RJ-45 connector, respectively, etc.

Notice!

Use the recommended connectors / sockets or the ready-made cables (See chapter 13 "Type overview and accessories").

7.5 Cable lengths and shielding

Observe the following maximum cable lengths and shielding types:

Connection	Interface	Max. cable length	Shielding
BCL – service	USB	3m	shielding absolutely necessary acc. to USB specifications
BCL – host	EtherNet	100m	absolutely required, shielded
Network from the first BCL to the last BCL	EtherNet	The max. segment length must not exceed 100m for 10Base-T twisted pairs (min. Cat. 3) and 100Base-TX twisted pair (min. Cat. 5)	absolutely required, shielded
BCL – power supply unit		30m	not necessary
Switching input		10m	not necessary
Switching output		10m	not necessary

Table 7.5: Cable lengths and shielding

8 Display elements and display

The BCL 308*i* is available optionally with display, two control buttons and LEDs or with only two LEDs as display elements.

8.1 LED indicators BCL 308*i*

Figure 8.1: BCL 308*i* - LED indicators

Two multicolor LEDs are used as the primary display instrument. LED functions:

PWR LED

PWR	**off**	**Device OFF** - no supply voltage
PWR	**flashes green**	**Device ok, initialization phase** - no bar code reading possible - voltage connected - self test running - initialization running
PWR	**green continuous light**	**Device ok** - bar code reading possible - self test successfully finished - device monitoring active
PWR	**green, briefly off - on**	**Good read, successful reading** - bar code(s) successfully read

PWR	**green, briefly off - briefly red - on**	**No read, reading not successful** - bar code(s) not read
PWR	**orange continuous light**	**Service mode** - bar code reading possible - configuration via the USB service interface - no data on the host interface
PWR	**flashes red**	**Warning set** - bar code reading possible - temporary operating fault
PWR	**red continuous light**	**Device error / parameter enable** - no bar code reading possible

BUS LED

BUS	**off**	**No supply voltage** - no communication possible - Ethernet protocols not released
BUS	**flashes green**	**Initialization** - of the BCL 308*i*, establishing communication
BUS	**green continuous light**	**Operation ok** - Network operation ok - Connection and communication to Host established
BUS	**flashes red**	**Communication error** - temporary connection error - if DHCP is active, no address could be obtained
BUS	**red continuous light**	**Network error**

8.2 LED indicators MS 308/MK308

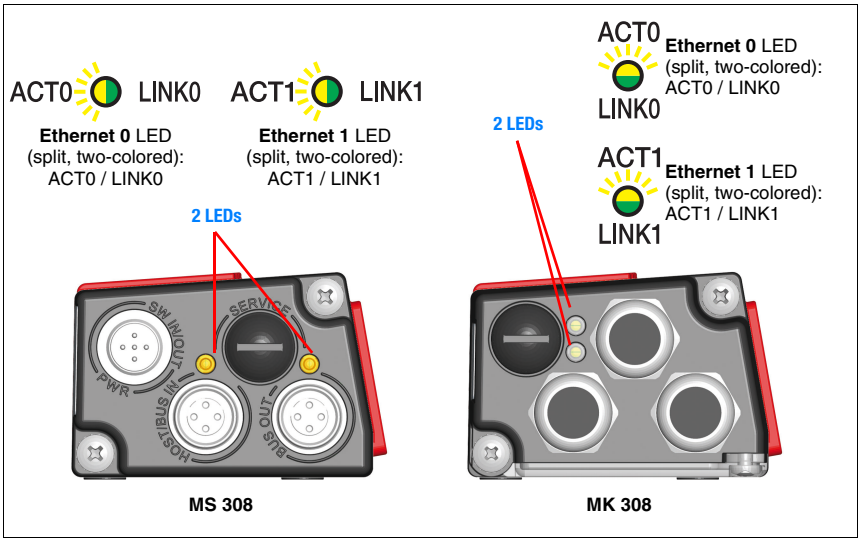

Figure 8.2: MS 308/MK 308 - LED indicators

As a status display for the two Ethernet connections, **Ethernet_0** and **Ethernet_1**, there are two split two-colored LEDS each in the MS 308 and MK 308:

LED ACT0 / LINK0 (on the MS 308/MK308)

green continuous light	**Ethernet connected (LINK)**
yellow flickering light	**data communication (ACT)**

LED ACT1 / LINK1 (on the MS 308/MK308)

green continuous light	**Ethernet connected (LINK)**
yellow flickering light	**data communication (ACT)**

8.3 Display BCL 308*i*

Figure 8.3: BCL 308*i* - Display

Notice!

The function of the LEDs is identical for the devices with and without display.

The optional display of the BCL 308*i* has the following features:

- Monochromatic with background lighting (blue/white)
- Double line, 128 x 32 pixels
- Display language: English

The display is only used as a **display element**. Two buttons can control which values are displayed. In doing so, the upper line displays the selected function and the lower line displays the result.

The background lighting is activated by the push of any button and automatically deactivated after a defined point in time:

Display functions

The following functions can be displayed and activated:

- `Reading result` = result of reading process
- `Decodequality` = quality of decoding process
- `BCL Info` = device status/error code
- `I/O Status` = status of the in/output
- `BCL Address` = IP address of the BCL 308*i*
- `Adjustmode` = alignment mode
- `Version` = software and hardware version

After the voltage is switched off/on, `reading result` is always displayed.

The display is controlled via the two control buttons:

↵	**ENTER**	**Activate/deactivate the display change function**
▼	**Down**	**Scroll through functions (downwards)**

Example:

Representation of the `BUS status` on the display:

1. Press button ↵: display flashes
2. Press button ▼: display changes from read result to decoding quality
3. Press button ▼: display changes from decoding quality to device status
4. Press button ▼: display changes from device status to BUS status
5. Press button ↵: bus status is displayed, display stops flashing.

Description of the display functions

```
Reading result
88776655
```

- 1st line: **read result** display function
- 2nd line: code content of the bar code, e.g. **88776655**

```
Decoding quality
84
```

- 1st line: **decoding quality** display function
- 2nd line: decoding quality in percent, e.g. **84**%

```
BCL info
Error code 3201
```

- 1st line: **device status** display function
- 2nd line: error code, e.g. **Error code 3201**

```
I/O status
In = 0 Out = 1
```

- 1st line: input/output **state** display function
- 2nd line: state: 0 =inactive, 1 = active, e.g. **In=0, Out=1**

```
BCL address
192.168.060.0
```

- 1st line: **IP address** display function
- 2nd line: set address, e.g. **192.168.060.0**

```
Adjust mode
73
```

- 1st line: **alignment mode** display function
- 2nd line: decoding quality in percent, e.g. **73**%

```
Version
SW:xxxxx HW:xxx
```

- 1st line: **version** display function
- 2nd line: software and hardware version of the device

9 Leuze webConfig tool

With the **Leuze webConfig tool**, an operating system independent, web-technology based, graphical user interface is available for configuring bar code readers of the **BCL 300*i*** series.

Through the use of HTTP as communication protocol and by using only standard technologies on the client side (HTML, JavaScript and AJAX), which are supported by all commonly used, modern browsers (e.g. **Mozilla Firefox** beginning with Version 3.0 or **Internet Explorer** beginning with Version 8.0), it is possible to operate the **Leuze webConfig tool** on any internet-ready PC.

Notice!

The webConfig tool is offered in 5 languages:

- *German*
- *English*
- *French*
- *Italian*
- *Spanish*

9.1 Connecting the SERVICE USB interface

The SERVICE USB interface of the BCL 308*i* is connected via the PC -side USB interface by means of a standard USB cable, with 1 type A connector and 1 Mini-B type connector.

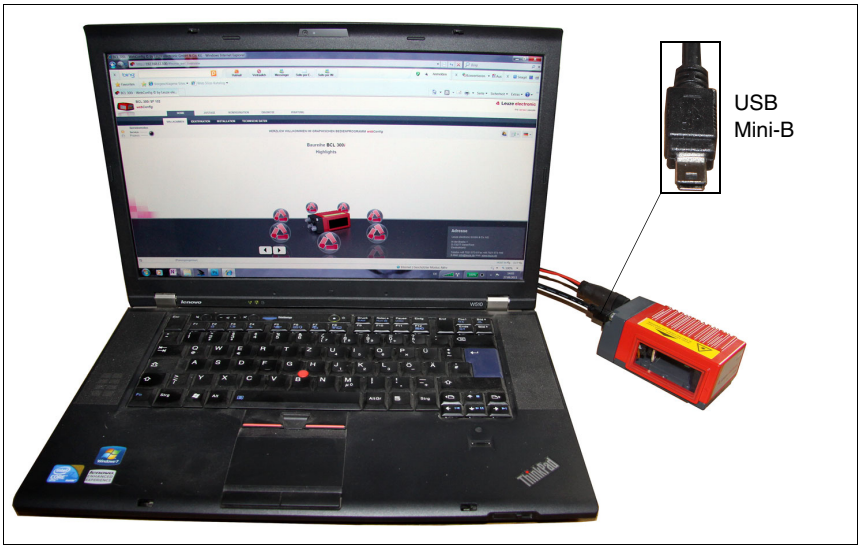

Figure 9.1: Connecting the SERVICE USB interface

9.2 Installing the required software

9.2.1 System requirements

Operating system:	Windows 2000 Windows XP (Home Edition, Professional) Windows Vista Windows 7
Computer:	PC with USB interface version 1.1 or higher
Graphics card:	min. 1024 x 768 pixels or higher resolution
Required hard-disk capacity:	approx. 10MB

Notice!

Updating the operating system and the browser regularly and installing the current Windows service packs is recommended.

9.2.2 Installing the USB driver

Notice!

*If you have already installed a USB driver for a BCL 5xx**i** on your computer, you don't have to install the USB driver for the BCL 308**i**. In this case, you can also start the webConfig tool of the BCL 308**i** by double-clicking on the BCL 5xx**i** icon.*

In order for the BCL 308*i* to be automatically detected by the connected PC, the **USB driver** must be installed **once** on your PC. To do this, you must have **administrator privileges**.

Please proceed according to the following steps:

- *Start your PC with administrator privileges and log on.*
- *Load the CD included in the delivery contents of your BCL 308**i** in the CD drive and start the "setup.exe" program.*
- *Alternatively, you can also download the setup program from the internet at www.leuze.com.*
- *Follow the instructions provided by the setup program.*

Upon successful installation of the USB driver, an icon with the name **Leuze Web Config** automatically appears on the desktop.

Notice!

If the installation failed, contact your network administrator: The settings of the firewall used may need to be adjusted.

9.3 Starting the webConfig tool

To start the **webConfig tool**, click the icon with the name **Leuze Web Config** located on the desktop. Make certain that the BCL 308*i* is connected to the PC via the USB interface and that voltage is connected. Alternatively, the **webConfig tool** can also be directly started via the Ethernet connection.

Notice!

*If you have already installed a USB driver for a BCL 5xx*i* on your computer, you can also start the webConfig tool of the BCL 308*i* by double-clicking on the BCL 5xx*i* icon.*

Alternatively, you can start the webConfig tool by starting the browser installed on your PC and entering the following IP address: **192.168.61.100**

This is the default Leuze maintenance address for communication with bar code readers of the BCL 300*i* and BCL 500*i* series.

In both cases, the following start page appears on your PC.

Figure 9.2: The start page of the webConfig tool

Notice!

*The webConfig tool is completely contained in the firmware of the BCL 308*i*.*
Depending on firmware version, the start page may vary from that shown above.

The individual parameters are – where useful – graphically displayed in order to better illustrate the meaning of the what are often perceived as abstract parameters.

The result is an easy-to-use and practically-oriented user interface!

9.4 Short description of the webConfig tool

The webConfig tool has 5 main menus:

- Home
  with information on the connected BCL 308*i* as well as on installation. This information corresponds to the information in this handbook.
- Alignment
  for manually starting read processes and for aligning the bar code reader. The results of the read processes are displayed immediately. As a result, this menu item can be used to determine the optimum installation location.
- Configuration
  for adjusting decoding, for data formatting and output, switching inputs/outputs, communication parameters and interfaces, etc. …
- Diagnostics
  for event logging of warnings and errors.
- Maintenance
  for updating the firmware.

The user interface of the webConfig tool is largely self-explanatory.

9.4.1 Module overview in the Configuration menu

The adjustable parameters of the BCL 308*i* are clustered in modules in the Configuration menu.

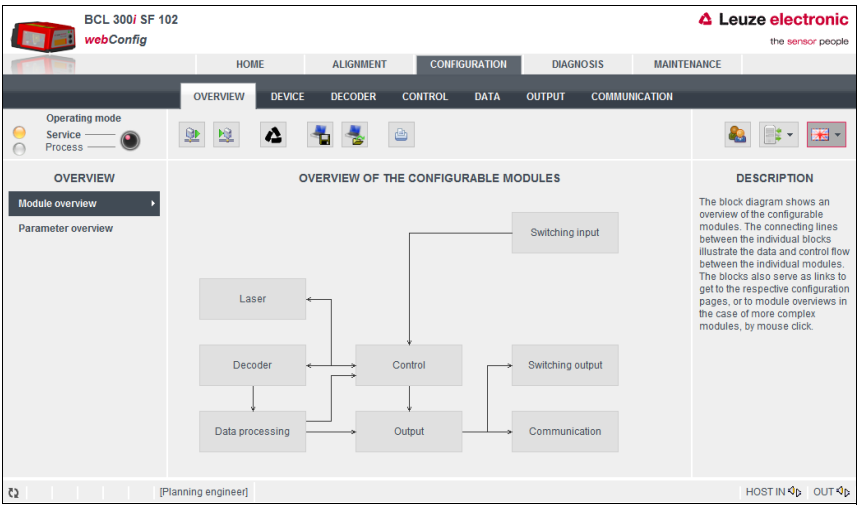

Figure 9.3: Module overview in the webConfig tool

Notice!

The webConfig tool is completely contained in the firmware of the BCL 308i. Depending on firmware version, the module overview may vary from that shown above.

The individual modules and their relationships to one another are graphically displayed in the module overview. The display is context sensitive, i.e. click a module to directly access the corresponding submenu.

Overview of the configurable modules

- Device:
  Configuration of the **switching inputs and outputs**
- Decoder:
  Configuration of the decoder table, such as **code type**, **number of digits**, etc.
- Control:
  Configuration of **activation** and **deactivation**, e.g. **auto-activation**, **AutoReflAct**, etc.
- Data:
  Configuration of **code content,** such as **filtering**, **segmentation of bar code data**, etc.
- Output:
  Configuration of **data output**, **header**, **trailer**, **reference code**, etc.
- Communication
  Configuration of the **host interface** and the **service interface**, e.g. **IP address**,**TCP/IP** or **UDP,** etc.
- Oscillating mirror:
  Configuration of the **oscillating mirror settings**

Notice!

*On the right side of the user interface of the webConfig tool, you will find a description of the individual modules and functions as a help text in the **Information** area.*

10 Commissioning and configuration

Attention Laser!

Observe the safety notices in chapter 2!

This chapter describes basic configuration steps which you can carry out via the webConfig tool.

Via the webConfig tool

The most convenient way to configure the BCL 308*i* is via the webConfig tool. To use the webConfig tool, you need to establish a USB connection between the BCL 308*i* and a PC/laptop.

Notice!

Notes on the use of the webConfig tool can be found in chapter 9 "Leuze webConfig tool" on page 102

10.1 Measures to be performed prior to the initial commissioning

- *Before commissioning, familiarize yourself with the operation and configuration of the BCL 308i.*
- *Before connecting the supply voltage, recheck all connections and ensure that they have been properly made.*

The description of the electrical connections can be found in chapter 7.

10.2 Starting the device

↳ *Connect the +18 … 30 VDC supply voltage (typ. +24 VDC); the BCL 308i starts up and the bar code reading window appears on the display.*

Notice!

The BCL 308i can decode the following code types in the standard setting:

- ***Code 128*** *Number of digits 4 … 63*
- ***2/5 Interleaved*** *number of digits 10*
- ***Code 39*** *Number of digits 4 … 30*
- ***EAN 8 / 13*** *Number of digits 8 and 13*
- ***UPC*** *Number of digits 8*
- ***Codabar*** *Number of digits 4 … 63*
- ***Code 93*** *Number of digits 4 … 63*
- ***Code GS1 Data Bar OMNIDIRECTIONAL***
- ***Code GS1 Data Bar LIMITED***
- ***Code GS1 Data Bar EXPANDED***

Deviations from these settings must be set via the webConfig tool. See "Leuze webConfig tool" on page 102.

As a first step, you need to set the communication parameters of the BCL 308*i*.

10.3 Setting the communication parameters

With the communication parameters, you determine how data is exchanged between BCL 308*i* and host system, monitor PCs etc.

The communication parameters are **independent** of the topology in which the BCL 308*i* is operated (see "Ethernet topologies" on page 79).

10.3.1 Manually setting the IP address

If your system does not include a DHCP server or if the IP addresses of the devices are to be set permanently, proceed as follows:

↳ *Have the network administrator specify the data for IP address, net mask and gateway address of the BCL 308i.*

↳ *Set these values on the BCL 308i:*

Via webConfig tool

↳ *In the main menu, select Configuration, submenu Communication -> Ethernet interface.*

Notice!

*If the setting is performed via the webConfig tool, the BCL 308i must be **restarted**. Only after this restart is the set IP address accepted and does it become active.*

10.3.2 Automatically setting the IP address

If your system includes a DHCP server which is to be used to assign the IP addresses, proceed as follows:

↳ *Activate the DHCP Client mode in the BCL 308i.*

Via webConfig:

`Configuration -> Communication -> Ethernet interface`

Activate the `DHCP` = ON setting there.

Notice!

The BCL 308i responds to ping commands. A simple test to determine whether the address assignment was successful is to enter the previously configured IP address in a ping command (e.g. "ping 192.168.60.101" in a command line window under Windows).

10.3.3 Ethernet host communication

The Ethernet host communication enables the configuration of connections to an external host system. Both UDP as well as TCP/IP (in either client or server mode) can be used. The connection-free UDP protocol is used primarily to transfer process data to the host (monitor operation). The connection-oriented TCP/IP protocol can also be used to transfer commands from the host to the device. With this connection, the data is backed up by the TCP/IP protocol itself.

If you would like to use the TCP/IP protocol, you must also define whether the BCL 308i is to operate as a TCP client or as a TCP server.

Both protocols can be activated simultaneously and used in parallel.

↳ *Contact your network administrator to determine which communication protocol is used.*

10.3.4 TCP/IP

↳ *Activate the TCP/IP protocol*

↳ *Set the TCP/IP mode of the BCL 308i*

In **TCP client mode**, the BCL 308i actively establishes the connection to the primary host system (PC / PLC as server). The BCL 308i requires from the user the IP address of the server (host system) and the port number on which the server (host system) accepts a connection. In this case, the BCL 308i determines when and with whom a connection is established!

↳ *With a BCL 308i as TCP client, also set the following values:*

- IP address of the TCP server (normally the PLC/host computer)
- Port number of the TCP server
- Timeout for the wait time for an answer from the server
- Repetition time for renewed communication attempt following a timeout

In **TCP server mode**, the primary host system (PC / PLC) actively establishes the connection and the connected BCL 308*i* waits for the connection to be setup. The TCP/IP stack requires information from the user regarding the local port of the BCL 308*i* (port number) on which the connection requests of a client application (host system) are to be accepted. If there is a connection request and a connection is established by the primary host system (PC / PLC as client), the BCL 308*i* (server mode) accepts the connection. Data can then be sent and received.

↳ *With a BCL 308i as TCP server, also set the following values:*

- Port number for the communication of the BCL 308*i* with the TCP client

The corresponding adjustment options can be found:

- Via webConfig:
  `Configuration -> Communication -> Host communication`

10.3.5 UDP

The BCL 308*i* requires from the user the IP address and the port number at which the communication partner receives data. Correspondingly, the host system (PC / PLC) now also requires the set IP address of the BCL 308*i* and the selected port number. This assignment notifies both communication partners of which port the data is received on.

↳ *Activate the UDP protocol*

↳ *Also set the following values:*

- IP address of the communication partner
- Port number of the communication partner

The corresponding adjustment options can be found:

- Via webConfig:
  `Configuration -> Communication -> Host communication`

10.4 Additional settings for the BCL 308*i*

After the basic configuration of the operating mode and the communication parameters, you need to carry out further settings via the webConfig tool:

- Decoding and processing the read data
- Control of the decoding
- Control of the switching outputs

10.4.1 Decoding and processing the read data

The BCL 308*i* offers the following options:

- Setting the number of labels to be decoded for each reading gate (0 … 64). This is done via the `Max. no. of labels` parameter.
- Definition of up to 8 different code types. Labels that match one of the defined code types are decoded. Further parameters can be set for each code type:
  - The code type (`symbology`)
  - The `Number of digits`: either up to 5 different numbers of digits (e.g., 10, 12, 16, 20, 24), or a range (`Interval mode`) and up to three additional numbers of digits (e.g., 2 … 10, 12, 16, 26)
  - The `Reading reliability`: the set value specifies how many times a label must be read and decoded with the same result before the result is accepted as valid
  - Additional code type specific settings (in the webConfig tool only)
  - `Check digit method` used for decoding as well as the type of `Check digit output` for the read result. The two possibilities for the latter are `Standard` (corresponds to the standard for the selected code type/symbology) and not `Standard`.

↳ *Define at least one code type with the desired settings.*

- Via webConfig:
  `Configuration -> Decoder`

Data processing via the webConfig tool

In the Data and Output submenus of the Configuration main menu, the webConfig tool provides extensive data processing options to adapt the functionality of the BCL 308*i* to the specific reading task:

- Data filtering and segmentation in the Data submenu:
  - Data filtering according to characteristics for handling identical bar code information
  - Data segmentation for differentiating between identifier and content of the read data
  - Data filtering according to content and/or identifier in order to suppress the output of bar codes with specific content/identifiers
  - Completeness inspection of the read data
- Sorting and formatting the output data in the Output submenu:
  - Configuration of up to 3 different sorting criteria. Sorting by physical data and content of the read bar codes.
  - Formatting of the data output for the HOST.
  - Formatting of the data output for the display.

10.4.2 Control of the decoding

In general, decoding is controlled via one or more of the configurable switching inputs/ outputs. For this purpose, the respective connection to the SW IN/OUT and POWER interfaces must be configured as a switching input.

Via a switching input, you can:

- start decoding
- stop decoding
- start decoding and then stop decoding after a configurable time period
- read a reference code
- start the automatic code type configuration (AutoConfig)

↳ *Connect the required control devices (photoelectric sensor, proximity switch, etc.) as described in chapter 7 to the BCL 308i.*

↳ *Configure the connected switching inputs according to your requirements. To do this, first set the I/O mode to Input and then configure the switching behavior:*

- Via webConfig:
  `Configuration -> Device -> Switching inputs/outputs`

Notice!

Alternatively, one can also activate decoding via the online command '+' and deactivate it via the online command '-'. Further information on the online commands can be found in chapter 11.

Advanced decoder control via the webConfig tool

The webConfig tool provides advanced functions, in particular for deactivating decoding. These may be accessed via the `Control` submenu of the `Configuration` main menu. You can:

- activate decoding automatically (delayed)
- stop decoding after a maximum reading gate time
- stop decoding via the completeness mode, if:
  - the maximum number of bar codes to be decoded has been decoded
  - a positive reference code comparison has taken place.

10.4.3 Control of the switching outputs

By using the switching inputs/outputs of the BCL 308*i*, external event-controlled functions can be implemented without assistance from the superior process control. For this purpose, the respective connection at the SW IN/OUT and POWER interfaces must be configured as a switching output.

A switching output can be activated:

- at the start/end of the reading gate
- depending on the read result:
  - reference code comparison positive/negative
  - read result valid/invalid
- depending on the state of the device:
  - ready/not ready
  - data transmission active/not active
  - active/standby
  - error/no error
- etc.

↳ *As described in chapter 7 of the manual, connect the required switching outputs.*

↳ *Configure the connected switching outputs according to your requirements. To do this, first set the I/O mode to Output and then configure the switching behavior:*

- Via webConfig:
  `Configuration -> Device -> Switching inputs/outputs`

10.5 Transmitting configuration data

Instead of going through the tedious task of configuring every parameter of the BCL 308*i* individually, you can also conveniently transfer configuration data.

Configuration data can be transferred between two bar code readers BCL 308*i* as follows:

- Storage in a file and transfer using the webConfig tool

10.5.1 Via the webConfig tool

With the webConfig tool, you can store entire configurations of the BCL 308*i* on data carriers and transfer them from these to the BCL 308*i*.

This storage of configuration data is especially useful if you want to store basic configurations which will require only minor changes.

In the webConfig tool, you store the configuration data via the buttons in the upper part of the middle window of all submenus of the Configuration main menu.

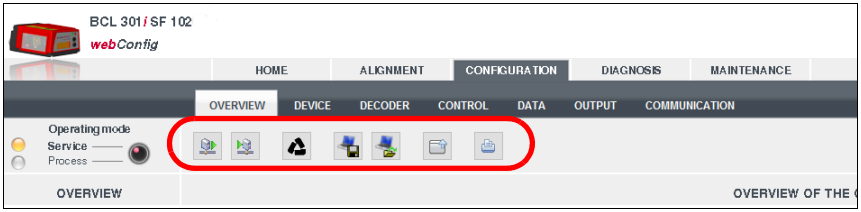

Figure 10.1: Storing configuration data in the webConfig tool

10.5.2 Replacing a defective BCL 308*i*

The MS 308 hood with integrated connectors and the MK 308 terminal hood feature an integrated parameter memory in which the configuration data is saved as a backup. If a defective BCL 308*i* has to be replaced, proceed as follows:

↳ *Disconnect the defective BCL 308i from the voltage supply.*

↳ *Dismount the defective BCL 308i and disconnect it from the hoods with integrated connectors/terminal hoods.*

↳ *Connect the new BCL 308i to the connection hood and remount the unit.*

↳ *Recommission the new BCL 308i (reconnect the voltage supply).*
The configuration is now imported from the external parameter memory of the connection hood and the BCL 308i is immediately operational without any further configuration.

11 Online commands

11.1 Overview of commands and parameters

Online commands can be used to send commands directly to the device for control and configuration.

For this purpose, the BCL 308*i* must be connected to a host- or service computer via the interface. The commands described can be sent either via the host or the service interface.

Online commands

With the commands, you can:

- control/decode.
- read/write/copy parameters.
- carry out an automatic configuration.
- teach-in/set reference codes.
- call up error messages.
- call up statistical device information.
- carry out a software reset in order to reinitialize the device.

Syntax

"Online" commands consist of one or two ASCII characters followed by command parameters.

No separation characters may be entered between the command and the command parameter(s). Both small and capitalized letters can be used.

Example:

Command **'CA'**: autoConfig function

Parameter **'+'**: Activation

Transmitted is: **'CA+'**

Notation

Commands, command parameters and returned data are enclosed between single quotation marks ' ' in the text of this manual.

Most online commands are acknowledged by the BCL 308*i* and any requested data returned. For commands that are not acknowledged, command execution can be observed or monitored directly on the device.

11.1.1 General 'online' commands

Software version number

Command	’V’
Description	Requests device version information
Parameter	no
Acknowledgment	**'BCL 308i SM 100 V 1.3.8 2008-02-15'** The first line contains the device type of the BCL 308*i*, followed by the device version number and version date. (The data which is actually displayed may vary from the values given here.)

Notice!

This command returns the major release number of the software packet. This major release number also appears on the display during start-up.
This command can be used to check whether the connected host or service computer is properly connected and configured. If you do not receive an acknowledgment, please check interface connections, protocol and service switches.

Software reset

Command	’H’
Description	Carries out a software reset. The device is restarted and reinitialized, leaving it in the same state as when the supply voltage is switched on.
Parameter	no
Acknowledgment	**’S’** (start signal)

Code recognition

Command	’CC’
Description	Detects an unknown bar code and outputs number of digits, code type, and code information to the interface, without storing the bar code in the parameter memory.
Parameter	no
Acknowledg-ment	**’xx yy zzzzzz’** **xx**: Code type of the read code **’01’** 2/5 Interleaved **’02’** Code 39 **’03’** Code 32 **’06’** UPC (A, E) **’07’** EAN **’08’** Code 128, EAN 128 **’10’** EAN Addendum **’11’** Codabar **’12’** Code 93 **’13’** GS1 DataBar OMNIDIRECTIONAL **’14’** GS1 DataBar LIMITED **’15’** GS1 DataBar EXPANDED **yy**: Number of digits of the read code **zzzzzz**: Contents of the decoded label. A ↑ appears if the label was not correctly read.

autoConfig

Command	’CA’
Description	Activates or deactivates the 'autoConfig' function. BCL 308*i* Certain label reading parameters are programmed automatically in the setup by the labels which are read while the ’autoConfig’ function is active.
Parameter	**’+’** Activates ’autoConfig’ **’/’** Rejects the last code read **’-’** Deactivates ’autoConfig’ and stores the decoded data in the current parameter set.
Acknowledgment	**’CSx’** **x** Status **’0’** Valid **’CA’** command **’1’** Invalid command **’2’** autoConfig could not be activated **’3’** autoConfig could not be deactivated **’4’** Result could not be deleted
Description	**’xx yy zzzzzz’** **xx** No. of digits of the read code **yy** Code type of the read code **’01’** 2/5 Interleaved **’02’** Code 39 **’03’** Code 32 **’06’** UPC (A, E) **’07’** EAN **’08’** Code 128, EAN 128 **’10’** EAN Addendum **’11’** Codabar **’12’** Code 93 **’13’** GS1 DataBar OMNIDIRECTIONAL **’14’** GS1 DataBar LIMITED **’15’** GS1 DataBar EXPANDED **zzzzzz**: Contents of the decoded label. A ↑ appears if the label was not correctly read.

Alignment mode

Command	’JP’
Description	This command simplifies mounting and alignment of the BCL 308*i*. After activating the function with **’JP+’**, the BCL 308*i* continuously supplies status information to the serial interfaces. With this online command, the scanner is set to terminate the decoding after 100 successfully decoded labels and output the status information. Subsequently, the read process is reactivated automatically. In addition to the output of the status information, the laser beam is used to display the reading quality. Depending on how many read results could be extracted, the duration of the laser's "off" time increases. If the reading quality is high, the laser beam flashes in brief, regular intervals. The worse the decoder decodes, the longer the pauses become during which the laser is switched off. The flashing intervals become more and more irregular because the laser may, in total, be active for longer to extract more labels. The duration of the pauses has been stepped in such a way that they can be distinguished by the eye.
Parameter	**’+’**: Starts the adjustment mode. **’-’**: Ends the adjustment mode.
Acknowledgment	**’yyy_zzzzzz’** **yyy**: Reading quality in %. A high process availability is ensured at read qualities > 75%. **zzzzzz**: Bar code information.

Manual definition of the reference code

Command	RS
Description	This command can be used to define a new reference code in the BCL 308*i* by means of direct input via the serial interface. The data is saved in the parameter set according to your input under reference code 1 through 2 and stored in the working buffer for direct further processing.
Parameter	**'RSyvxxzzzzzzzz'** **y**, **v, x** and **z** are placeholders (variables) for the actual input. **y** Defined reference code no. **'1'** (Code 1) **'2'** (Code 2) **v** Storage location for reference code: **'0'** RAM+EEPROM, **'3'** RAM only **xx** Defined code type (see command 'CA') **z** Defined code information (1 … 63 characters)
Acknowledgment	**'RSx'** **x** Status **'0'** Valid '**Rx**' command **'1'** Invalid command **'2'** Insufficient memory for reference code **'3'** Reference code has not been saved **'4'** Reference code invalid
Example	Input = 'RS130678654331' (Code 1 (1), RAM only (3), UPC (06), code information)

Reference code teach-in

Command	'RT'
Description	This command enables a reference code to be defined quickly by reading an example label.
Parameter	**'RTy'** **y** Function **'1'** Defines reference code 1 **'2'** Defines reference code 2 **'+'** Activates the definition of reference code 1 up to the value of Parameter no_of_labels **'-'** Exits the Teach-in process
Acknowledgment	The BCL 308*i* first responds with the command **'RS'** and corresponding status (see command 'RS'). After a bar code has been read, it sends the result in the following format: **'RCyvxxzzzzz'** **y**, **v, x** and **z** are placeholders (variables) for the actual input. **y** Defined reference code no. **'1'** (Code 1) **'2'** (Code 2) **v** Memory location for reference code **'0'** RAM+EEPROM, **'3'** RAM only **xx** Defined code type (see command 'CA') **z** Defined code information (1 … 63 characters)

Notice!

With this function, only code types are recognized that are identified using the autoConfig function or which were set in the setup.

↳ *After each reading via an 'RTy' command, explicitly switch off the function again since failure to do so will interfere with other commands as well as prevent execution of a new 'RTx' command.*

Reading a reference code

Command	’RR’
Description	The command reads out the reference code defined in the BCL 308*i*. If no parameters are specified, all defined codes are output.
Parameter	<Reference code number> **’1’ … ’2’** value range of reference codes 1 to 2
Acknowledgment	If no reference codes are defined, the BCL 308*i* responds with the **’RS’** command and corresponding status (see command ’RS’)**.** For valid codes, the output corresponds to the following format: **RCyvxxzzzzzz** **y**, **v, x** and **z** are placeholders (variables) for the actual input. **y** Defined reference code no. **’1’** (Code 1) **’2’** (Code 2) **v** Memory location for reference code **’0’** RAM+EEPROM, **’3’** RAM only **xx** Defined code type (see command ’CA’) **z** Defined code information (1 … 63 characters)

11.1.2 'Online' commands for system control

Activating sensor input

Command	'+'
Description	The command activates decoding. This command is used to activate the reading gate. It remains active until it is deactivated by one of the following criteria: • Deactivation by a manual command • Deactivation by a switching input • Deactivation upon reaching the specified read quality (equal scans) • Deactivation by timeout • Deactivation upon reaching a preset number of scans without information.
Parameter	no
Acknowledgment	None

Deactivating sensor input

Command	'-'
Description	The command deactivates decoding. This command can be used to deactivate the reading gate. Following deactivation, the read result is output. Because the reading gate was manually deactivated and, thus, no GoodRead criterion was met, a NoRead is output.
Parameter	no
Acknowledgment	None

11.1.3 ’Online’ commands for configuration of switching inputs/outputs

Activate switching output

Command	’OA’
Description	The switching outputs 1 and 2 can be activated with this command. The respective port must have been configured as a switching output. The logic state is output, i.e., an inverted logic is taken into account (e.g., inverted logic and a state of High corresponds to a voltage of 0 V at the switching output).
Parameter	**’OA<a>’** **<a>** Selected switching output [1, 2], unit (dimensionless)
Acknowledgment	None

Query the state of the switching outputs

Command	’OA’
Description	This command may be used to query the states of the switching inputs and outputs that are configured as a switching output and that have been set via commands. The logic state is output, i.e., an inverted logic is taken into account (e.g., inverted logic and a state of High corresponds to a voltage of 0 V at the switching output).
Parameter	**’OA?’**
Acknowledgment	**’OA S1=<a>;S2=<a>’** **<a>** State of the switching outputs **’0’** Low **’1’** High **’I’** Configuration as switching input **’P’** Passive configuration

Set the state of the switching outputs

Command	’OA’
Description	This command is used to set the states of the switching inputs/outputs that are configured as a switching output. The logic state is specified, i.e., an inverted logic is taken into account (e.g., inverted logic and a state of High corresponds to a voltage of 0 V at the switching output). The values of the switching inputs/outputs that are not configured as switching outputs are ignored. You may also use only a selection of the existing switching inputs/outputs as long as these are listed in ascending order.
Parameter	**’OA [S1=<a>][;S2=<a>]’** **<a>** State of the switching output **’0’** Low **’1’** High
Acknowledgment	**’OA=<aa>’** **<aa>** Status acknowledgment, unit (dimensionless) **’00’** ok **’01’** Syntax error **’02’** Parameter error **’03’** Other error

Deactivate switching output

Command	’OD’
Description	The switching outputs 1 and 2 can be deactivated with this command. The respective port must have been configured as a switching output. The logic state is output, i.e., an inverted logic is taken into account (e.g., inverted logic and a state of High corresponds to a voltage of 0 V at the switching output).
Parameter	**’OD<a>’** **<a>** Selected switching output [1, 2], unit (dimensionless)
Acknowledgment	None

Query the configuration of the switching inputs/outputs

Command	’OF’
Description	This command may be used to query the configuration of the switching inputs/outputs 1 and 2.
Parameter	**’OF?’**
Acknowledgment	**’OF S1=<a>;S2=<a>’** **<a>** Function of the switching input/ output, unit [dimensionless]’ **’I’** Switching input **’O’** Switching output **’P’** Passive

Configure the switching inputs/ outputs

Command	’OF’
Description	This command may be used to configure the function of the switching inputs/outputs 1 and 2. You may also use only a selection of the existing switching inputs/outputs as long as these are listed in ascending order.
Parameter	**’OF [S1=<a>][;S2=<a>]’** **<a>** Function of the switching input/ output, unit [dimensionless]’ **’I’** Switching input **’O’** Switching output **’P’** Passive
Acknowledgment	**’OF=<bb>’** **<bb>** Status acknowledgment **’00’** ok **’01’** Syntax error **’02’** Parameter error **’03’** Other error

11.1.4 ’Online’ commands for the parameter set operations

Copying parameter set

Command	’PC’
Description	This command can only be used to copy parameter sets in their entirety. This can be used to replicate the three parameter sets **default**, **permanent** and **operating parameters** on the basis of one another. In addition, this command can also be used to restore the factory settings.
Parameter	**’PC<Source type><Target type>’** **<Source type>** Parameter data set which is to be copied, unit [dimensionless] **'0'** Parameter data set in permanent memory **'2'** Default or factory parameter set **'3'** Operating parameter data set in volatile memory **<Target type>** Parameter set to which the data is to be copied, unit [dimensionless] **'0'** Parameter data set in permanent memory **'3'** Operating parameter data set in volatile memory Permissible combinations here include: **'03'** Copying the data set from the permanent memory to the operating parameter data set **'30'** Copying the operating parameter data set to the permanent parameter set memory **'20'** Copying the default parameters to the permanent memory and to the main memory
Acknowledgment	**’PS=<aa>’** **<aa>** Status acknowledgment, unit [dimensionless] **’00’** Ok **’01’** Syntax error **’02’** Impermissible command length **’03’** Reserved **’04’** Reserved **’05’** Reserved **’06’** Impermissible combination, source type - target type

Requesting parameter data set from BCL 308i

Determining parameter set difference to default parameters

Command	'PR'
Description	The parameters of the BCL 308*i* are grouped together in a parameter set and permanently stored in memory. There is one parameter set in permanent memory and one operating parameter set in volatile memory; in addition, there is a default parameter set (factory parameter set) for initialization. This command can be used to edit the first two parameter sets (in permanent and volatile memory). A check sum can be used for reliable parameter transfer.
Parameter	**'PR<BCC type><PS type><Address><Data length>[<BCC>]'** **<BCC type>** Check-digit function during transfer, unit [dimensionless] **'0'** Not used **'3'** BCC mode 3 **<PS type>** Memory from which the values are to be read, unit [dimensionless] **'0'** Parameter values stored in the flash memory **'1'** Reserved **'2'** Default values **'3'** Operating values in RAM **<Address>** Relative address of the data within the data set **'aaaa'** Four-digit, unit [dimensionless] **<Data length>** Length of the parameter data to be transferred **'bbbb'** Four-digit, unit [length in bytes] **<BCC>** Check sum calculated as specified under BCC type

Command	'PR'
Acknowledgment positive	**PT<BCC type><PS type><Status><Start> <Address parameter value><Address+1 parameter value>… [;<Address><Address parameter value>][<BCC>]** **<BCC type>** Check-digit function during transfer, unit [dimensionless] **'0'** Not used **'3'** BCC mode 3 **<PS type>** Memory from which the values are to be read, unit [dimensionless] **'0'** Parameter values stored in the flash memory **'2'** Default values **'3'** Operating values in RAM **<Status>** Mode of parameter processing, unit [dimensionless] **'0'** No further parameters **'1'** Additional parameters follow **<Start>** Relative address of the data within the data set, **'aaaa'** Four-digit, unit [dimensionless] **<P.value A.>** Parameter value of the parameter stored at this address; the parameter set data **'bb'** is converted from HEX format to a 2-byte ASCII-format for transfer. **<BCC>** Check sum calculated as specified under BCC type
Acknowledgment negative	**'PS=<aa>'** Parameter reply: **<aa>** Status acknowledgment, unit [dimensionless] **'01'** Syntax error **'02'** Impermissible command length **'03'** Impermissible value for checksum type **'04'** Invalid check sum received **'05'** Impermissible number of data requested **'06'** Requested data does not (any longer) fit in the transmission buffer **'07'** Impermissible address value **'08'** Read access after end of data set **'09'** Impermissible QPF data set type

Command	’PD’
Description	This command outputs the difference between the default parameter set and the operating parameter set or the difference between the default parameter set and the permanent parameter set. **Comment**: The reply supplied by this command can e.g. be directly used for programming a device with factory settings, whereby this device receives the same configuration as the device on which the PD-sequence was executed.
Parameter	**’PD<P.set1><P.set2>’** **<P.set1>** Parameter data set which is to be copied, unit [dimensionless] **’0’** Parameter data set in permanent memory **’2’** Default or factory parameter set **<P.set2>** Parameter set to which the data is to be copied, unit [dimensionless] **’0’** Parameter data set in permanent memory **’3’** Operating parameter data set in volatile memory Permissible combinations here include: **’20’** Output of the parameter differences between the default and the permanently saved parameter set **’23’** Output of the parameter differences between the default parameter set and the operating parameter set saved in volatile memory **’03’** Output of the parameter differences between the permanent parameter set and the operating parameter set saved in volatile memory
Acknowledgment positive	**PT<BCC><PS type><Status><Adr.><P.value adr.><P.valueAdr.+1>… [;<Adr.><P.value adr.>]** **<BCC>** **’0’** No check digit **’3’** BCC mode 3 **<PS type>** **’0’** Values stored in flash memory **’3’** Operating values stored in RAM **<Status>** **’0’** No further parameters **’1’** Additional parameters follow **<Adr.>** Relative address of the data within the data set **’aaaa’** Four-digit, unit [dimensionless] **<P.value>** Parameter value of the -bb- parameter stored at this address. The parameter set data is converted from HEX format to a 2-byte-ASCII format for transfer.

Command	’PD’
Acknowledgment negative	**’PS=<aa>’** **<aa>** Status acknowledgment, unit [dimensionless] **’0’** No difference **’1’** Syntax error **’2’** Impermissible command length **’6’** Impermissible combination, parameter set 1 and parameter set 2 **’8’** Invalid parameter set

Writing parameter set

Command	'PT'
Description	The parameters of the BCL 308*i* are grouped together in a parameter set and permanently stored in memory. There is one parameter set in permanent memory and one operating parameter set in volatile memory; in addition, there is a default parameter set (factory parameter set) for initialization. This command can be used to edit the first two parameter sets (in permanent and volatile memory). A check sum can be used for reliable parameter transfer.
Parameter	**PT<BCC type><PS type><Status><Adr.><P.value adr.> <P.value adr+1>…[;<Adr.><P.value adr.>][<BCC>]** **<BCC type>** Check-digit function during transfer, unit [dimensionless] **'0'** No check digit **'3'** BCC mode 3 **<PS type>** Memory from which the values are to be read, unit [dimensionless] **'0'** Parameter values stored in the flash memory **'3'** Operating values stored in RAM **<Status>** Mode of parameter processing, without function here, unit [dimensionless] **'0'** No reset after parameter change, no further parameters **'1'** No reset after parameter change, additional parameters follow **'2'** With reset after parameter change, no further parameters **'6'** Set parameters to factory setting, no further parameters **'7'** Set parameters to factory settings, lock all code types; the code-type setting must follow in the command! **<Adr.>** Relative address of the data within the data set, **'aaaa'** Four-digit, unit [dimensionless] **<P.value>** Parameter value of the -bb- parameter stored at this address. The parameter set data is converted from HEX format to a 2-byte-ASCII format for transfer. **<BCC>** Check sum calculated as specified under BCC type

Command	’PT’
Acknowledgment	**’PS=<aa>’** Parameter reply: **<aa>** Status acknowledgment, unit [dimensionless] **’01’** Syntax error **’02’** Impermissible command length **’03’** Impermissible value for checksum type **’04’** Invalid check sum received **’05’** Impermissible data length **’06’** Invalid data (parameter limits violated) **’07’** Invalid start address **’08’** Invalid parameter set **’09’** Invalid parameter set type

12 Diagnostics and troubleshooting

12.1 General causes of errors

Error	Possible error cause	Measures
Status LED **PWR**		
Off	• No supply voltage connected to the device • Hardware error	☐ Check supply voltage ☐ Send device to customer service
Red, flashing	• Warning	☐ Query diagnostic data and carry out the resulting measures
Red, continuous light	• Error: no function possible	☐ Internal device error, send in device
Orange, continuous light	• Device in service mode	☐ Reset service mode with webConfig tool
Status LED **BUS**		
Off	• No supply voltage connected to the device • Etherhost communication not yet activated • Hardware error	☐ Check supply voltage ☐ Activate Etherhost communication ☐ Send device to customer service
Red, flashing	• Communication error	☐ Check interface
Red, continuous light	• No communication	☐ Check interface
Orange, flashing	• Timeout -> Error on interface	☐ Check interface wiring

Table 12.1: General causes of errors

12.2 Interface errors

Error	Possible error cause	Measures
No communication via USB service interface	• Incorrect connection cable • Connected BCL 308*i* is not detected	☐ Check connection cable ☐ Install USB driver
No communication via Ethernet interface	• Incorrect wiring • Different protocol settings • Protocol not released	☐ Check wiring ☐ Check protocol settings ☐ Activate TCP/ IP or UDP
Sporadic errors at the Ethernet interface	• Incorrect wiring • Effects due to EMC • Overall network expansion exceeded	☐ Check wiring • In particular, check wire shielding • Check the cable used ☐ Check shielding (shield covering in place up to the clamping point) ☐ Check grounding concept and connection to functional earth (FE) ☐ Avoid EMC coupling caused by power cables laid parallel to device lines. ☐ Check max. network expansion as a function of the max. cable lengths

Table 12.2: Interface error

Notice!

*Please use **chapter 12 as a master copy** should servicing be required.*
Cross the items in the "Measures" column which you have already examined, fill out the following address field and fax the pages together with your service contract to the fax number listed below.

Customer data (please complete)

Device type:	
Company:	
Contact partner / department:	
Phone (direct):	
Fax:	
Street / No:	
ZIP code/City:	
Country:	

Leuze Service fax number:

+49 7021 573 - 199

13 Type overview and accessories

13.1 Part number code

BCL 300i OM100D H

Heating option	H =	With heating
Display option	D =	With display and two control button
Beam exit	0	Lateral
	2	Front
Optics	N	High Density (near)
	M	Medium Density (medium distance)
	F	Low Density (remote)
	L	Long Range (very large distances)
Scanning principle	S	Line scanner (single line)
	R1	Line scanner (raster)
	O	Oscillating-mirror scanner
	i =	Integrated fieldbus technology
Interface	00	RS 232/RS 422 (standalone)
	01	RS 485 (multiNet Slave)
	04	PROFIBUS DP
	08	ETHERNET TCP/IP, UDP
	48	PROFINET-IO RT
	BCL	Bar code reader

Table 13.1: Part number codeBCL 308*i*

13.2 Type overview BCL 308*i*

Network participant with 2x Ethernet interface:

Type designation	Description	Part no.
Single line scanner with frontal beam exit		
BCL 308*i* S N 102	with N optics	50116414
BCL 308*i* S M 102	with M optics	50116408
BCL 308*i* S F 102	with F optics	50116396
BCL 308*i* S L 102	with L optics	50116402
BCL 308*i* S N 102 D	with N optics and display	50116413
BCL 308*i* S M 102 D	with M optics and display	50116407
BCL 308*i* S F 102 D	with F optics and display	50114822
BCL 308*i* S L 102 D	with L optics and display	50116401
BCL 308*i* S N 102 D H	with N optics, display and heating	50116412
BCL 308*i* S M 102 D H	with M optics, display and heating	50116406
BCL 308*i* S F 102 D H	with F optics, display and heating	50116395
BCL 308*i* S L 102 D H	with L optics, display and heating	50116400
Raster scanner with frontal beam exit		
BCL 308*i* R1 N 102	with N optics	50116391
BCL 308*i* R1 M 102	with M optics	50116387
BCL 308*i* R1 F 102	with F optics	50116383
BCL 308*i* R1 N 102 D	with N optics and display	50116390
BCL 308*i* R1 M 102 D	with M optics and display	50116386
BCL 308*i* R1 F 102 D	with F optics and display	50116382
Single line scanner with deflection mirror		
BCL 308*i* S N 100	with N optics	50116411
BCL 308*i* S M 100	with M optics	50116405
BCL 308*i* S F 100	with F optics	50116394
BCL 308*i* S L 100	with L optics	50116399
BCL 308*i* S N 100 D	with N optics and display	50116410
BCL 308*i* S M 100 D	with M optics and display	50116404
BCL 308*i* S F 100 D	with F optics and display	50116393
BCL 308*i* S L 100 D	with L optics and display	50116398
BCL 308*i* S N 100 D H	with N optics, display and heating	50116409
BCL 308*i* S M 100 D H	with M optics, display and heating	50116403
BCL 308*i* S F 100 D H	with F optics, display and heating	50116392
BCL 308*i* S L 100 D H	with L optics, display and heating	50116397
Raster scanner with deflection mirror		
BCL 308*i* R1 N 100	with N optics	50116389
BCL 308*i* R1 M 100	with M optics	50116385
BCL 308*i* R1 F 100	with F optics	50116381
BCL 308*i* R1 N 100 D	with N optics and display	50116388
BCL 308*i* R1 M 100 D	with M optics and display	50116384
BCL 308*i* R1 F 100 D	with F optics and display	50116380
Oscillating mirror scanner		
BCL 308*i* O N 100	with N optics	50116377
BCL 308*i* O M 100	with M optics	50116374
BCL 308*i* O F 100	with F optics	50116368
BCL 308*i* O L 100	with L optics	50116371
BCL 308*i* O N 100 D	with N optics and display	50116378
BCL 308*i* O M 100 D	with M optics and display	50116375
BCL 308*i* O F 100 D	with F optics and display	50116369
BCL 308*i* O L 100 D	with L optics and display	50116372
BCL 308*i* O N 100 D H	with N optics, display and heating	50116379
BCL 308*i* O M 100 D H	with M optics, display and heating	50116376
BCL 308*i* O F 100 D H	with F optics, display and heating	50116370
BCL 308*i* O L 100 D H	with L optics, display and heating	50116373

13.3 Connection hood accessories

Type designation	Description	Part no.
MS 308	Hood with integrated connectors for BCL 308*i*	50114823
MK 308	Terminal hood for BCL 308*i*	50116466

Table 13.2: Connection hoods for the BCL 308*i*

13.4 Accessory connectors

Type designation	Description	Part no.
KD 095-5A	M12 axial socket for voltage supply, shielded	50020501
D-ET1	RJ45 connector for user-configuration	50108991
S-M12A-ET	Axial M12 connector, D-coded, for self-assembly	50106119
KDS ET M12 / RJ 45 W - 4P	Converter from M12 D-coded to RJ 45 socket	50109832

Table 13.3: Connectors for the BCL 308*i*

13.5 Accessory USB cable

Type designation	Description	Part no.
KB USBA-USBminiB	USB service cable, 2 type A and Mini-B type connectors, length 1m	50117011

Table 13.4: Service cable for the BCL 308*i*

13.6 Accessory mounting device

Type designation	Description	Part no.
BT 56	Mounting device for rod	50027375
BT 59	Mounting device for ITEM	50111224

Table 13.5: Mounting devices for the BCL 308*i*

13.7 Reflector accessories for autoReflAct

Type designation	Description	Part no.
Reflective tape no. 4 / 100 x 100 mm	Reflective tape as reflector for autoReflAct operation	50106119

Table 13.6: Reflector for autoReflAct operation

13.8 Accessory ready-made cables for voltage supply

13.8.1 Contact assignment of PWR connection cable

PWR connection cable (5-pin socket, A-coded, not shielded)			
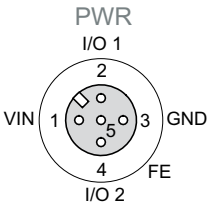 **M12 socket (A-coded)**	**Pin**	**Name**	**Core color**
	1	VIN	**brown**
	2	I/O 1	**white**
	3	GND	**blue**
	4	I/O 2	**black**
	5	FE	**gray**
	Thread	FE	**bare**

Notice!

These cables are not shielded.

13.8.2 Specifications of the cables for voltage supply

Operating temperature range	in rest state:	-30°C … +70°C
	in motion:	5°C … +70°C
Material	sheathing: PVC	
Bending radius	> 50mm	

13.8.3 Order codes of the cables for voltage supply

Type designation	Description	Part no.
K-D M12A-5P-5m-PVC	M12 socket for PWR, axial connector, open cable end, cable length 5m, not shielded	50104557
K-D M12A-5P-10m-PVC	M12 socket for PWR, axial plug outlet, open cable end, cable length 10m, not shielded	50104559

Table 13.7: PWR cables for the BCL 308*i*

13.9 Accessory ready-made cables for bus connection

13.9.1 General information

- Cable **KB ET…** for connecting to Industrial Ethernet via M12 connector
- Standard cable available in lengths from 2 … 30m
- Special cables on request.

13.9.2 Contact assignments M12 Ethernet connection cables KB ET…

M12 Ethernet connection cable (4-pin connector, D-coded, on both sides)			
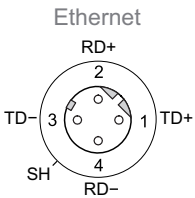 **M12 plug (D-coded)**	**Pin**	**Name**	**Core color**
	1	TD+	**yellow**
	2	RD+	**white**
	3	TD-	**orange**
	4	RD-	**blue**
	SH (thread)	FE	**bare**

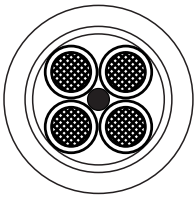

Core colors

WH
YE
BU
OG

Conductor class: VDE 0295, EN 60228, IEC 60228 (Class 5)

Shielding contact via connector housing!

Figure 13.8:Cable structure of Industrial Ethernet connection cable

13.9.3 Technical data of the M12 Ethernet connection cables KB ET…

Operating temperature range	in rest state: -50°C … +80°C in motion: -25°C … +80°C in motion: -25°C … +60°C (when used with drag chains)
Material	cable sheath: PUR (green), wire insulation: PE foam, free of halogens, silicone and PVC
Bending radius	> 65 mm, suitable for drag chains
Bending cycles	> 10^6, perm. acceleration < 5 m/s^2

13.9.4 Order codes for M12 Ethernet connection cables KB ET…

Type designation	Description	Part no.
M12 plug for BUS IN, axial connector, open cable end		
KB ET - 1000 - SA	Cable length 1m	50106738
KB ET - 2000 - SA	Cable length 2m	50106739
KB ET - 5000 - SA	Cable length 5m	50106740
KB ET - 10000 - SA	Cable length 10m	50106741
KB ET - 15000 - SA	Cable length 15m	50106742
KB ET - 20000 - SA	Cable length 20m	50106743
KB ET - 25000 - SA	Cable length 25m	50106745
KB ET - 30000 - SA	Cable length 30m	50106746
M12 plug for BUS IN to RJ-45 connector		
KB ET - 1000 - SA-RJ45	Cable length 1m	50109879
KB ET - 2000 - SA-RJ45	Cable length 2m	50109880
KB ET - 5000 - SA-RJ45	Cable length 5m	50109881
KB ET - 10000 - SA-RJ45	Cable length 10m	50109882
KB ET - 15000 - SA-RJ45	Cable length 15m	50109883
KB ET - 20000 - SA-RJ45	Cable length 20m	50109884
KB ET - 25000 - SA-RJ45	Cable length 25m	50109885
KB ET - 30000 - SA-RJ45	Cable length 30m	50109886
M12 plug + M12 plug for BUS OUT to BUS IN		
KB ET - 1000 - SSA	Cable length 1m	50106898
KB ET - 2000 - SSA	Cable length 2m	50106899
KB ET - 5000 - SSA	Cable length 5m	50106900
KB ET - 10000 - SSA	Cable length 10m	50106901
KB ET - 15000 - SSA	Cable length 15m	50106902
KB ET - 20000 - SSA	Cable length 20m	50106903
KB ET - 25000 - SSA	Cable length 25m	50106904
KB ET - 30000 - SSA	Cable length 30m	50106905

Table 13.9: Bus connection cables for the BCL 308*i*

14 Maintenance

14.1 General maintenance information

Usually, the bar code reader BCL 308*i* does not require any maintenance by the operator.

Cleaning

Clean glass surface with a damp sponge soaked in commercial cleaning detergent. Then rub it with a soft, clean, dry cloth.

Notice!

Do not use aggressive cleaning agents such as thinner or acetone for cleaning the device. Use of improper cleaning agents can damage the housing window.

14.2 Repairs, servicing

Repairs to the device must only be carried out by the manufacturer.

↳ *Contact your Leuze distributor or service organization should repairs be required. The addresses can be found on the inside of the cover and on the back.*

Notice!

When sending devices to Leuze electronic for repair, please provide an accurate description of the error.

14.3 Disassembling, packing, disposing

Repacking

For later reuse, the device is to be packed so that it is protected.

Notice!

Electrical scrap is a special waste product! Observe the locally applicable regulations regarding disposal of the product.

15 Appendix

15.1 Declaration of Conformity

Leuze electronic

the sensor people

EG-KONFORMITÄTS-ERKLÄRUNG	EC DECLARATION OF CONFORMITY	DECLARATION CE DE CONFORMITE
Der Hersteller	The Manufacturer	Le constructeur
	Leuze electronic GmbH + Co. KG In der Braike 1, PO Box 1111 73277 Owen, Germany	
erklärt, dass die nachfolgend aufgeführten Produkte den einschlägigen Anforderungen der genannten EG-Richtlinien entsprechen.	declares that the following listed products fulfil the relevant provisions of the mentioned EC Directives.	déclare que les produits identifiés suivants sont conformes aux directives CE mentionnées.
Produktbeschreibung:	Description of product:	Description de produit:
Stationärer Barcodeleser BCL 3xxi	**Stationary Barcode Reader BCL 3xxi**	**Lecteures Stationn. de Code à Barres BCL 3xxi**
Angewandte EG-Richtlinie(n):	Applied EC Directive(s):	Directive(s) CE appliquées:
2004/108/EG 2006/95/EG	**2004/108/EC 2006/95/EC**	**2004/108/CE 2006/95/CE**
Angewandte Normen:	Applied standards:	Normes appliquées:
EN 61000-6-2: 2005 EN 60825-1: 2007		**EN 61000-6-3: 2007**

24.8.2011

Datum / Date / Date — Dr. Harald Grübel, Geschäftsführer / Director / Directeur

Leuze electronic GmbH + Co. KG
In der Braike 1
D-73277 Owen
Telefon +49 (0) 7021 573-0
Telefax +49 (0) 7021 573-199
info@leuze.de
www.leuze.com

LEO-ZQM-148-01-FO

Leuze electronic GmbH + Co. KG, Sitz Owen, Registergericht Stuttgart, HRA 230712
Persönlich haftende Gesellschafterin Leuze electronic Geschäftsführungs-GmbH, Sitz Owen, Registergericht Stuttgart, HRB 230550
Geschäftsführer: Dr. Harald Grübel (Vorsitzender), Karsten Just
USt.-IdNr. DE 145812521 | Zollnummer 2554232
Es gelten ausschließlich unsere aktuellen Verkaufs- und Lieferbedingungen
Only our current Terms and Conditions of Sale and Delivery shall apply

Figure 15.1: Declaration of conformity BCL 308*i*

Leuze electronic

the sensor people

EG-KONFORMITÄTS-ERKLÄRUNG	EC DECLARATION OF CONFORMITY	DECLARATION CE DE CONFORMITE
Der Hersteller	The Manufacturer	Le constructeur
	Leuze electronic GmbH + Co. KG In der Braike 1, PO Box 1111 73277 Owen, Germany	
erklärt, dass die nachfolgend aufgeführten Produkte den einschlägigen Anforderungen der genannten EG-Richtlinien entsprechen.	declares that the following listed products fulfil the relevant provisions of the mentioned EC Directives.	déclare que les produits identifiés suivants sont conformes aux directives CE mentionnées.
Produktbeschreibung:	Description of product:	Description de produit:
Modulare Steckerhaube MS 3xx, Modulare Klemmhaube MK 3xx, Modulare Anschlusseinheit MA 100	**Modular hood with integrated connectors MS 3xx, Modular terminal hoods MK 3xx, Modular interfacing unit MA 100**	**Logement modulaire de prises MS 3xx, Logement modulaire de bornes MK 3xx, Unité modulaire de branchement MA 100**
Angewandte EG-Richtlinie(n):	Applied EC Directive(s):	Directive(s) CE appliquées:
2004/108/EG	**2004/108/EC**	**2004/108/CE**
Angewandte Normen:	Applied standards:	Normes appliquées:
EN 61000-6-2: 2005		**EN 61000-6-4: 2007**

Datum / Date — Dr. Harald Grübel, Geschäftsführer / Director / Directeur

Leuze electronic GmbH + Co. KG
In der Braike 1
D-73277 Owen
Telefon +49 (0) 7021 573-0
Telefax +49 (0) 7021 573-199
info@leuze.de
www.leuze.com

LEO-ZQM-148-01-FO

Leuze electronic GmbH + Co. KG, Sitz Owen, Registergericht Stuttgart, HRA 230712
Persönlich haftende Gesellschafterin Leuze electronic Geschäftsführungs-GmbH, Sitz Owen, Registergericht Stuttgart, HRB 230550
Geschäftsführer: Dr. Harald Grübel (Vorsitzender), Karsten Just
USt.-IdNr. DE 145912521 | Zollnummer 2554232

Es gelten ausschließlich unsere aktuellen Verkaufs- und Lieferbedingungen
Only our current Terms and Conditions of Sale and Delivery shall apply

Figure 15.2: Connection hood / connector unit declaration of conformity

15.2 ASCII character set

ASCII	Dec.	Hex.	Oct.	Designation	Meaning
NUL	0	00	0	NULL	Zero
SOH	1	01	1	START OF HEADING	Start of heading
STX	2	02	2	START OF TEXT	Start of text characters
ETX	3	03	3	END OF TEXT	Last character of text
EOT	4	04	4	END OF TRANSMISS.	End of transmission
ENQ	5	05	5	ENQUIRY	Request for data trans.
ACK	6	06	6	ACKNOWLEDGE	Positive acknowledgment
BEL	7	07	7	BELL	Bell signal
BS	8	08	10	BACKSPACE	Backspace
HT	9	09	11	HORIZ. TABULATOR	Horizontal tabulator
LF	10	0A	12	LINE FEED	Line feed
VT	11	0B	13	VERT. TABULATOR	Vertical tabulator
FF	12	0C	14	FORM FEED	Form feed
CR	13	0D	15	CARRIAGE RETURN	Carriage return
SO	14	0E	16	SHIFT OUT	Shift out
SI	15	0F	17	SHIFT IN	Shift in
DLE	16	10	20	DATA LINK ESCAPE	Data link escape
DC1	17	11	21	DEVICE CONTROL 1	Device control character 1
DC2	18	12	22	DEVICE CONTROL 2	Device control character 2
DC3	19	13	23	DEVICE CONTROL 3	Device control character 3
DC4	20	14	24	DEVICE CONTROL 4	Device control character 4
NAK	21	15	25	NEG. ACKNOWLEDGE	Negative acknowledge
SYN	22	16	26	SYNCRONOUS IDLE	Synchronization
ETB	23	17	27	EOF TRANSM. BLOCK	End of data transmission block
CAN	24	18	30	CANCEL	Invalid
EM	25	19	31	END OF MEDIUM	End of medium
SUB	26	1A	32	SUBSTITUTE	Substitution
ESC	27	1B	33	ESCAPE	Escape
FS	28	1C	34	FILE SEPARATOR	File separator
GS	29	1D	35	GROUP SEPARATOR	Group separator
RS	30	1E	36	RECORD SEPARATOR	Record separator
US	31	1F	37	UNIT SEPARATOR	Unit separator
SP	32	20	40	SPACE	Space
!	33	21	41	EXCLAMATION POINT	Exclamation point

ASCII	Dec.	Hex.	Oct.	Designation	Meaning
"	34	22	42	QUOTATION MARK	Quotation mark
#	35	23	43	NUMBER SIGN	Number sign
$	36	24	44	DOLLAR SIGN	Dollar sign
%	37	25	45	PERCENT SIGN	Percent sign
&	38	26	46	AMPERSAND	Ampersand
’	39	27	47	APOSTROPHE	Apostrophe
(	40	28	50	OPEN. PARENTHESIS	Open parenthesis
)	41	29	51	CLOS. PARENTHESIS	Closed parenthesis
*	42	2A	52	ASTERISK	Asterisk
+	43	2B	53	PLUS	Plus sign
,	44	2C	54	COMMA	Comma
-	45	2D	55	HYPHEN (MINUS)	Hyphen
.	46	2E	56	PERIOD (DECIMAL)	Period (decimal)
/	47	2F	57	SLANT	Slant
0	48	30	60	0	Number
1	49	31	61	1	Number
2	50	32	62	2	Number
3	51	33	63	3	Number
4	52	34	64	4	Number
5	53	35	65	5	Number
6	54	36	66	6	Number
7	55	37	67	7	Number
8	56	38	70	8	Number
9	57	39	71	9	Number
:	58	3A	72	COLON	Colon
;	59	3B	73	SEMICOLON	Semicolon
<	60	3C	74	LESS THAN	Less than
=	61	3D	75	EQUALS	Equals
>	62	3E	76	GREATER THAN	Greater than
?	63	3F	77	QUESTION MARK	Question mark
@	64	40	100	COMMERCIAL AT	Commercial AT
A	65	41	101	A	Capital letter
B	66	42	102	B	Capital letter
C	67	43	103	C	Capital letter
D	68	44	104	D	Capital letter

ASCII	Dec.	Hex.	Oct.	Designation	Meaning
E	69	45	105	E	Capital letter
F	70	46	106	F	Capital letter
G	71	47	107	G	Capital letter
H	72	48	110	H	Capital letter
I	73	49	111	I	Capital letter
J	74	4A	112	J	Capital letter
K	75	4B	113	K	Capital letter
L	76	4C	114	L	Capital letter
M	77	4D	115	M	Capital letter
N	78	4E	116	N	Capital letter
O	79	4F	117	O	Capital letter
P	80	50	120	P	Capital letter
Q	81	51	121	Q	Capital letter
R	82	52	122	R	Capital letter
S	83	53	123	S	Capital letter
T	84	54	124	T	Capital letter
U	85	55	125	U	Capital letter
V	86	56	126	V	Capital letter
W	87	57	127	W	Capital letter
X	88	58	130	X	Capital letter
Y	89	59	131	Y	Capital letter
Z	90	5A	132	Z	Capital letter
[	91	5B	133	OPENING BRACKET	Opening bracket
\	92	5C	134	REVERSE SLANT	Reverse slant
]	93	5D	135	CLOSING BRACKET	Closing bracket
^	94	5E	136	CIRCUMFLEX	Circumflex
_	95	5F	137	UNDERSCORE	Underscore
‘	96	60	140	GRAVE ACCENT	Grave accent
a	97	61	141	a	Lower case letter
b	98	62	142	b	Lower case letter
c	99	63	143	c	Lower case letter
d	100	64	144	d	Lower case letter
e	101	65	145	e	Lower case letter
f	102	66	146	f	Lower case letter
g	103	67	147	g	Lower case letter

ASCII	Dec.	Hex.	Oct.	Designation	Meaning
h	104	68	150	h	Lower case letter
i	105	69	151	i	Lower case letter
j	106	6A	152	j	Lower case letter
k	107	6B	153	k	Lower case letter
l	108	6C	154	l	Lower case letter
m	109	6D	155	m	Lower case letter
n	110	6E	156	n	Lower case letter
o	111	6F	157	o	Lower case letter
p	112	70	160	p	Lower case letter
q	113	71	161	q	Lower case letter
r	114	72	162	r	Lower case letter
s	115	73	163	s	Lower case letter
t	116	74	164	t	Lower case letter
u	117	75	165	u	Lower case letter
v	118	76	166	v	Lower case letter
w	119	77	167	w	Lower case letter
x	120	78	170	x	Lower case letter
y	121	79	171	y	Lower case letter
z	122	7A	172	z	Lower case letter
{	123	7B	173	OPENING BRACE	Opening brace
|	124	7C	174	VERTICAL LINE	Vertical line
}	125	7D	175	CLOSING BRACE	Closing brace
~	126	7E	176	TILDE	Tilde
DEL	127	7F	177	DELETE (RUBOUT)	Delete

15.3 Bar code samples

15.3.1 Module 0.3

Code type 01: Interleaved 2 of 5

Modul 0,3

1122334455

Code type 02: Code 39

Modul 0,3

135AC

Code type 11: Codabar

Modul 0,3

A121314A

Code 128

Modul 0,3

abcde

Code type 08: EAN 128

Modul 0,3

leuze

Code type 06: UPC-A

SC 2

1 23456 78901 2

Code type 07: EAN 8

SC 3

3456 7890

Code type 10: EAN 13 Add-on

SC 0 S

77889

1 122334 455666

Code type 13: GS1 DataBar OMNIDIRECTIONAL

(01) 0 0000123 45678 4

Figure 15.3: Bar code sample labels (module 0.3)

15.3.2 Module 0.5

Code type 01: Interleaved 2 of 5

Modul 0,5

6677889900

Code type 02: Code 39

Modul 0,5

246BD

Code type 11: Codabar

Modul 0,5

A1511617A

Code 128

Modul 0,5

fghij

Code type 08: EAN 128

Modul 0,5

LEUZE

Code type 06: UPC-A

SC 4

0 98765 43219 8

Code type 07: EAN 8

SC 6

9876 5430

Code type 10: EAN 13 Add-on

SC 2

0 099887 766550 44332

Figure 15.4: Bar code sample labels (module 0.5)